MIAMI-DADE COUNTY
DEPARTMENT OF PERMITTING, ENVIRONMENT, AND REGULATORY AFFAIRS (PERA)
BOARD AND CODE ADMINISTRATION DIVISION

MIAMI-DADE COUNTY
PRODUCT CONTROL SECTION
11805 SW 26 Street, Room 208
Miami, Florida 33175-2474
T (786) 315-2590 F (786) 315-2599
www.miamidade.gov/pera/

# NOTICE OF ACCEPTANCE (NOA)

**SMI Aluminum Systems, LLC**
**11305 NW 128 StreetSM-45**
**Medley, FL 33178**

**SCOPE:**

This NOA is being issued under the applicable rules and regulations governing the use of construction materials. The documentation submitted has been reviewed and accepted by Miami-Dade County PERA - Product Control Section to be used in Miami Dade County and other areas where allowed by the Authority Having Jurisdiction (AHJ).

This NOA shall not be valid after the expiration date stated below. The Miami-Dade County Product Control Section (In Miami Dade County) and/or the AHJ (in areas other than Miami Dade County) reserve the right to have this product or material tested for quality assurance purposes. If this product or material fails to perform in the accepted manner, the manufacturer will incur the expense of such testing and the AHJ may immediately revoke, modify, or suspend the use of such product or material within their jurisdiction. PERA reserves the right to revoke this acceptance, if it is determined by Miami-Dade County Product Control Section that this product or material fails to meet the requirements of the applicable building code.

This product is approved as described herein, and has been designed to comply with the Florida Building Code, including the High Velocity Hurricane Zone.

**DESCRIPTION: Series "SM-45" Aluminum Storefront System - N.I.**

**APPROVAL DOCUMENT:** Drawing No. **W05-11**, titled "Series SM-45 Aluminum Storefront System (N.I.)", sheets 1 through 11 of 11, prepared by Al-Farooq Corporation, dated 03/01/05 with revision B dated 01/25/12, signed and sealed by Javad Ahmad , P.E., bearing the Miami-Dade County Product Control Revision stamp with the Notice of Acceptance number and expiration date by the Miami-Dade County Product Control Section.

**MISSILE IMPACT RATING: None.**

**LABELING:** Each unit shall bear a permanent label with the manufacturer's name or logo, city, state, model/series, and following statement: "Miami-Dade County Product Control Approved", unless otherwise noted herein.

**RENEWAL** of this NOA shall be considered after a renewal application has been filed and there has been no change in the applicable building code negatively affecting the performance of this product.

**TERMINATION** of this NOA will occur after the expiration date or if there has been a revision or change in the materials, use, and/or manufacture of the product or process. Misuse of this NOA as an endorsement of any product, for sales, advertising or any other purposes shall automatically terminate this NOA. Failure to comply with any section of this NOA shall be cause for termination and removal of NOA.

**ADVERTISEMENT:** The NOA number preceded by the words Miami-Dade County, Florida, and followed by the expiration date may be displayed in advertising literature. If any portion of the NOA is displayed, then it shall be done in its entirety.

**INSPECTION:** A copy of this entire NOA shall be provided to the user by the manufacturer or its distributors and shall be available for inspection at the job site at the request of the Building Official.

This NOA **revises NOA # 10-1213.07** and consists of this page 1 and evidence pages E-1 and E-2, as well as approval document mentioned above.

The submitted documentation was reviewed by **Manuel Perez, P.E.**

MIAMI-DADE COUNTY APPROVED

## NOTICE OF ACCEPTANCE: EVIDENCE SUBMITTED

**A. DRAWINGS**

1. Manufacturer's die drawings and sections.
2. Drawing No **W05-11**, titled "Series SM-45 Aluminum Storefront System (N.I.)", sheets 1 through 11 of 11, prepared by Al-Farooq Corporation, dated 03/01/05 with revision B dated 01/25/12, signed and sealed by Javad Ahmad , P.E.

**B. TESTS**

1. Test reports on: 1) Air Infiltration Test, per FBC, TAS 202-94
   2) Uniform Static Air Pressure Test, Loading per FBC, TAS 202-94
   3) Water Resistance Test per FBC, TAS 202-94
   4) Forced Entry Test, per FBC 2411 3.2.1 and TAS 202-94

   along with installation diagram of a series "McKinley" narrow stile outswing aluminum storefront door in an aluminum storefront system, prepared by Fenestration Testing Laboratory, Inc., Test Report No. **FTL-4404**, dated 02/03/05, signed and sealed by Edmundo Largaespada, P.E.
   ***(For reference only, submitted under NOA #11-0412.04)***
2. Test reports on: 1) Air Infiltration Test, per FBC, TAS 202-94
   2) Uniform Static Air Pressure Test, Loading per FBC, TAS 202-94
   3) Water Resistance Test per FBC, TAS 202-94
   4) Forced Entry Test, per FBC 2411 3.2.1 and TAS 202-94

   along with installation diagram of an aluminum storefront system, prepared by Fenestration Testing Laboratory, Inc., Test Report No. **FTL-4502**, dated 04/28/05, signed and sealed by Edmundo Largaespada, P.E.
   ***(Submitted under previous NOA #05-1013.09)***
3. Test reports on: **1)** Uniform Static Air Pressure Test, Loading per FBC, TAS 202-94 along with installation diagram of an aluminum storefront system, prepared by Fenestration Testing Laboratory, Inc., Test Report No. **FTL-4321**, dated 10/12/04, signed and sealed by Edmundo Largaespada, P.E.
   ***(Submitted under previous NOA #05-1013.09)***
4. Test reports on: **1)** Uniform Static Air Pressure Test, Loading per FBC, TAS 202-94 along with installation diagram of an aluminum storefront system, prepared by Fenestration Testing Laboratory, Inc., Test Report No. **FTL-4342**, dated 10/12/04, signed and sealed by Edmundo Largaespada, P.E.
   ***(Submitted under previous NOA #05-1013.09)***

**Manuel Perez, P.E.**
**Product Control Examiner**
**NOA No. 11-1208.02**
**Expiration Date: March 24, 2016**
**Approval Date: February 23, 2012**

## NOTICE OF ACCEPTANCE: EVIDENCE SUBMITTED

**C. CALCULATIONS:**

1. Anchor verification calculations and structural analysis, complying with FBC-2007 and FBC-2010, prepared by Al-Farooq Corporation, dated 10/26/10 and revised and updated on 01/19/12, signed and sealed by Javad Ahmad, P.E.
2. Glazing complies with ASTM E1300-04

**D. QUALITY ASSURANCE**

1. Miami-Dade Department of Permitting, Environment, and Regulatory Affairs (PERA).

**E. MATERIAL CERTIFICATIONS**

1. None.

**F. STATEMENTS**

1. Statement letter of conformance, complying with FBC-2010, and of no financial interest, dated 01/20/12, signed and sealed by Javad Ahmad, P.E.
2. Laboratory compliance letter for Test Report No. **FTL-4321**, issued by Fenestration Testing Laboratory, Inc., dated February 11, 2005, signed and sealed by Edmundo Largaespada, P.E.
   ***(Submitted under previous NOA #05-1013.09)***
3. Laboratory compliance letter for Test Report No. **FTL-4342**, issued by Fenestration Testing Laboratory, Inc., dated February 11, 2005, signed and sealed by Edmundo Largaespada, P.E.
   ***(Submitted under previous NOA #05-1013.09)***
4. Laboratory compliance letter for Test Report No. **FTL-4502**, issued by Fenestration Testing Laboratory, Inc., dated May 20, 2005, signed and sealed by Edmundo Largaespada, P.E.
   ***(Submitted under previous NOA #05-1013.09)***
5. Name change documentation, dated September, 2010, was submitted under previous **NOA# 10-1213.07**.

**G. OTHERS**

1. Notice of Acceptance No. **10-12013.07**, issued to SMI Aluminum Systems LLC for their Series "SM-45" Aluminum Storefront System - N.I., approved on 03/10/11 and expiring on 03/24/16.

**Manuel Perez, P.E.**
**Product Control Examiner**
**NOA No. 11-1208.02**
**Expiration Date: March 24, 2016**
**Approval Date: February 23, 2012**

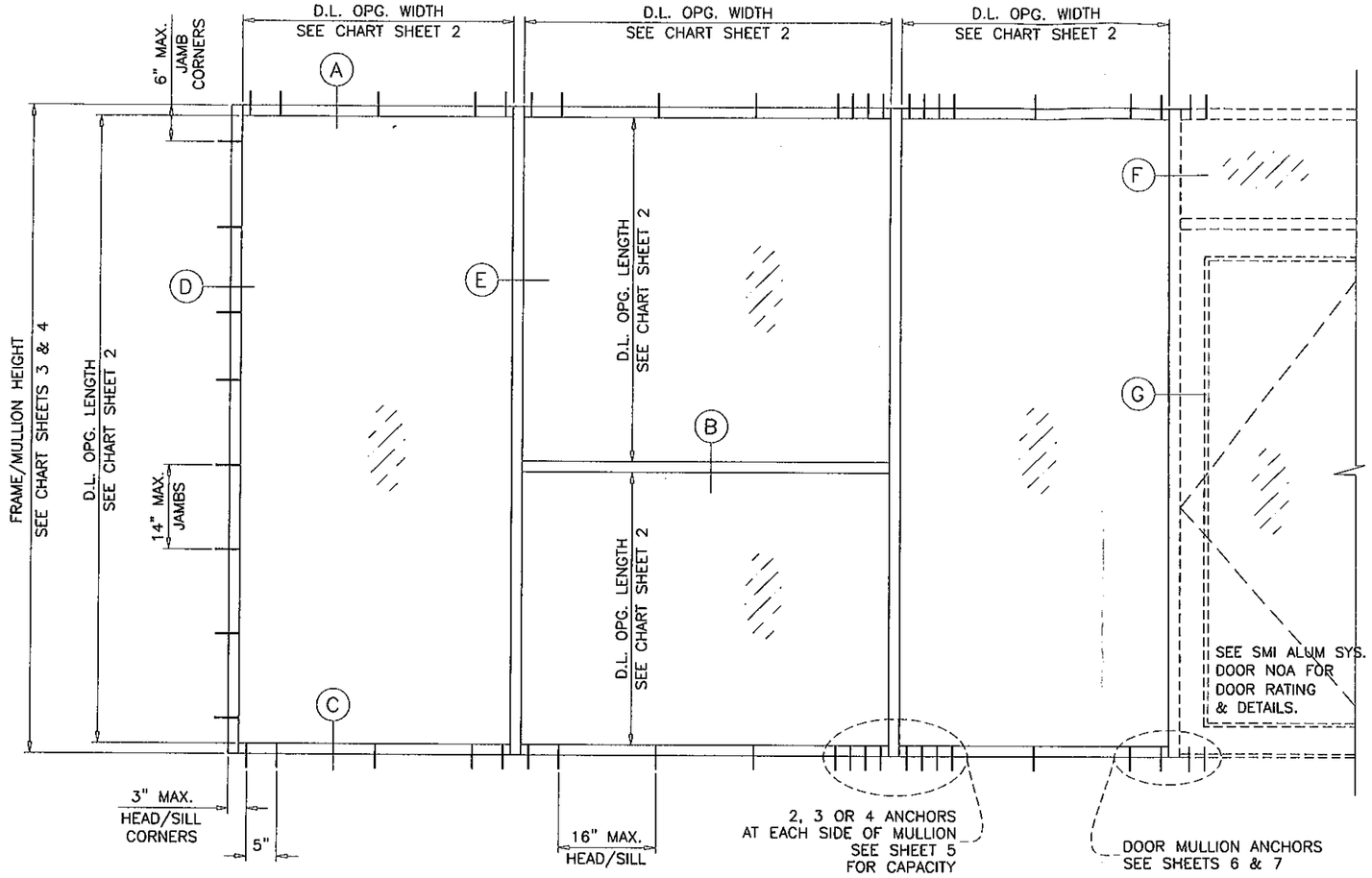


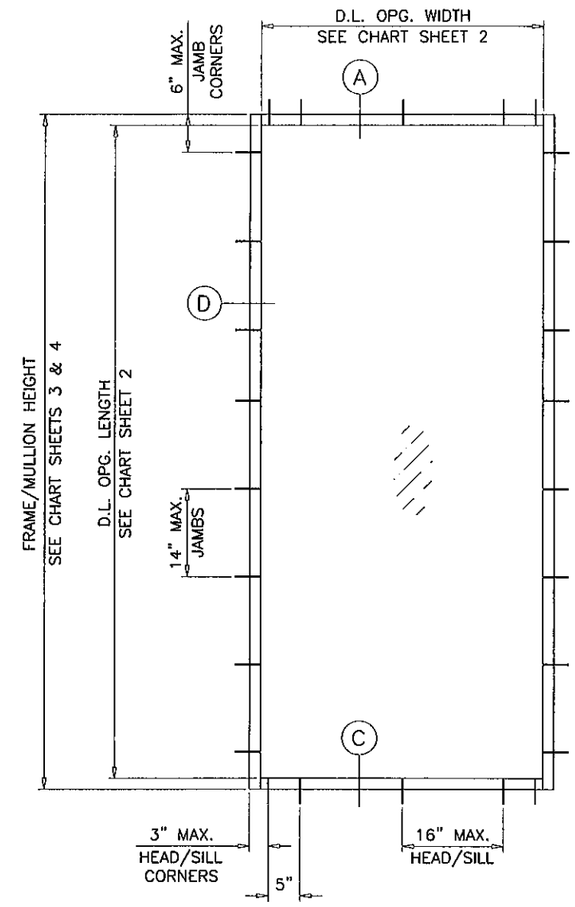


TYPICAL ELEVATIONS

## SERIES SMI-45 ALUMINUM STOREFRONT SYSTEM

THIS SYSTEM MAY BE USED IN CONJUNCTION WITH MIAMI-DADE COUNTY APPR'D DOORS.
LOWER DESIGN PRESSURE FROM STOREFRONT OR DOOR APPROVAL WILL APPLY TO ENTIRE SYSTEM.

CODE REQUIREMENTS FOR SAFEGUARDS MUST BE OBSERVED.

THIS PRODUCT HAS BEEN DESIGNED AND TESTED TO COMPLY WITH THE REQUIREMENTS OF THE FLORIDA BUILDING CODE INCLUDING HIGH VELOCITY HURRICANE ZONE (HVHZ).

WOOD BUCKS BY OTHERS, MUST BE ANCHORED PROPERLY TO TRANSFER LOADS TO THE STRUCTURE.

ANCHORS SHALL BE AS LISTED, SPACED AS SHOWN ON DETAILS, ANCHORS EMBEDMENT TO BASE MATERIAL SHALL BE BEYOND WALL DRESSING OR STUCCO.

ANCHORING OR LOADING CONDITIONS NOT SHOWN IN THESE DETAILS ARE NOT PART OF THIS APPROVAL.

A LOAD DURATION INCREASE IS USED IN DESIGN OF ANCHORS INTO WOOD ONLY.

MATERIALS INCLUDING BUT NOT LIMITED TO STEEL/METAL SCREWS, THAT COME INTO CONTACT WITH OTHER DISSIMILAR MATERIALS SHALL MEET THE REQUIREMENTS OF THE FLORIDA BLDG. CODE SECTION 2003.8.4.

## INSTRUCTIONS:

USE CHARTS AS FOLLOWS,

STEP 1 DETERMINE DESIGN WIND LOAD REQUIREMENT BASED ON WIND VELOCITY, BLDG. HEIGHT, WIND ZONE USING APPLICABLE ASCE 7 STANDARD.

STEP 2 SEE CHARTS ON SHEET 2 FOR DESIGN LOAD CAPACITY OF DESIRED GLASS SIZE.

STEP 3 CHECK MULLION CAPACITY FOR A GIVEN SPACING AND HEIGHT USING CHARTS ON SHEETS 3 & 4 FOR STOREFRONT MULLION AND SHEET 6 & 7 FOR DOOR MULLION. THE CAPACITY SHOULD EXCEED THE DESIGN LOAD.

STEP 4 USING CHART ON SHEETS 5 SELECT ANCHOR OPTION WITH DESIGN RATING MORE THAN DESIGN LOAD SPECIFIED IN STEP 1 ABOVE.

STEP 5 THE LOWEST VALUE RESULTING FROM STEPS 2, 3 AND 4 SHALL APPLY TO ENTIRE SYSTEM.

THIS SYSTEM IS NOT RATED FOR IMPACT.

INSTALLATION OF THIS PRODUCT IN THE HVHZ AREA REQUIRES THE USE OF APPROVED SHUTTERS OR EXTERNAL PROTECTION DEVICES COMPLYING WITH HVHZ REQUIREMENTS.

INSTALLATION OF THIS SYSTEM OUTSIDE THE HVHZ AREA MUST MEET THE APPLICABLE REQUIREMENTS FOR WIND BORNE DEBRIS PROTECTION.

Engr: JAVAD AHMAD
CIVIL
FLA. PE # 70592
C.A.N. 3538
JAN 3 0 2012

PRODUCT REVISED
as complying with the Florida
Building Code
Acceptance No 11-1208.02
Expiration Date MARCH 24, 2016
By Manuel Fuster
Miami Dade Product Control


AL-FAROOQ CORPORATION
ENGINEERS & PRODUCT DEVELOPMENT
1235 S.W. 87 AVE
MIAMI, FLORIDA 33174
TEL. (305) 264-8100 FAX. (305) 262-6978
STORE\W05-11SM

SERIES SM-45 ALUMINUM STOREFRONT SYSTEM (N.I.)
SMI Aluminum Systems, LLC.
11305 N.W. 128 STREET
MEDLEY, FL. 33178
TEL. (305) 888-6288 FAX. (305) 888-6289


revisions:

| no | date | by | description |
|---|---|---|---|
| A | 10.08.10 | | GENERAL REVISION |
| B | 01.25.12 | | GENERAL REVISION |

date: 03-01-05
scale: 1/2"=1'-0"
dr. by: HAMID
chk. by:

drawing no.
W05-11

sheet 1 of 11

| DESIGN LOAD CAPACITY – PSF | | |
|---|---|---|
| NOMINAL DIMS. | | 1/4" TEMP. GL. |
| D.L.O. WIDTH | D.L.O. HEIGHT | EXT.(+) & INT.(–) |
| 24" | 72" | 120.0 |
| 28" | | 120.0 |
| 32" | | 120.0 |
| 36" | | 120.0 |
| 40" | | 120.0 |
| 44" | | 120.0 |
| 48" | | 120.0 |
| 52" | | 120.0 |
| 56" | | 120.0 |
| 60" | | 120.0 |
| 64" | | 120.0 |
| 68" | | 120.0 |
| 72" | | 120.0 |
| 24" | 78" | 120.0 |
| 28" | | 120.0 |
| 32" | | 120.0 |
| 36" | | 120.0 |
| 40" | | 120.0 |
| 44" | | 120.0 |
| 48" | | 120.0 |
| 52" | | 120.0 |
| 56" | | 120.0 |
| 60" | | 120.0 |
| 64" | | 120.0 |
| 68" | | 120.0 |
| 24" | 84" | 120.0 |
| 28" | | 120.0 |
| 32" | | 120.0 |
| 36" | | 120.0 |
| 40" | | 120.0 |
| 44" | | 120.0 |
| 48" | | 120.0 |
| 52" | | 120.0 |
| 56" | | 120.0 |
| 60" | | 120.0 |
| 64" | | 120.0 |
| 24" | 90" | 120.0 |
| 28" | | 120.0 |
| 32" | | 120.0 |
| 36" | | 120.0 |
| 40" | | 120.0 |
| 44" | | 120.0 |
| 48" | | 120.0 |
| 52" | | 120.0 |
| 56" | | 120.0 |

| DESIGN LOAD CAPACITY – PSF | | |
|---|---|---|
| NOMINAL DIMS. | | 1/4" TEMP. GL. |
| D.L.O. WIDTH | D.L.O. HEIGHT | EXT.(+) & INT.(–) |
| 24" | 96" | 120.0 |
| 28" | | 120.0 |
| 32" | | 120.0 |
| 36" | | 120.0 |
| 40" | | 115.2 |
| 44" | | 113.2 |
| 48" | | 112.6 |
| 52" | | 111.1 |
| 56" | | 110.6 |
| 24" | 102" | 120.0 |
| 28" | | 120.0 |
| 32" | | 120.0 |
| 36" | | 115.2 |
| 40" | | 107.0 |
| 44" | | 105.0 |
| 48" | | 103.9 |
| 52" | | 102.4 |
| 24" | 108" | 120.0 |
| 28" | | 120.0 |
| 32" | | 120.0 |
| 36" | | 110.1 |
| 40" | | 100.9 |
| 44" | | 97.8 |
| 48" | | 96.8 |
| 24" | 114" | 120.0 |
| 28" | | 120.0 |
| 32" | | 120.0 |
| 36" | | 120.0 |
| 40" | | 106.0 |
| 44" | | 95.7 |
| 24" | 120" | 120.0 |
| 28" | | 120.0 |
| 32" | | 120.0 |
| 36" | | 120.0 |
| 40" | | 102.9 |
| 44" | | 92.2 |
| 24" | 126" | 120.0 |
| 28" | | 120.0 |
| 32" | | 120.0 |
| 36" | | 119.8 |
| 40" | | 100.9 |
| 24" | 132" | 120.0 |
| 28" | | 120.0 |
| 32" | | 120.0 |
| 36" | | 117.8 |
| 40" | | 98.8 |
| 24" | 144" | 120.0 |
| 28" | | 120.0 |
| 32" | | 120.0 |
| 36" | | 113.7 |

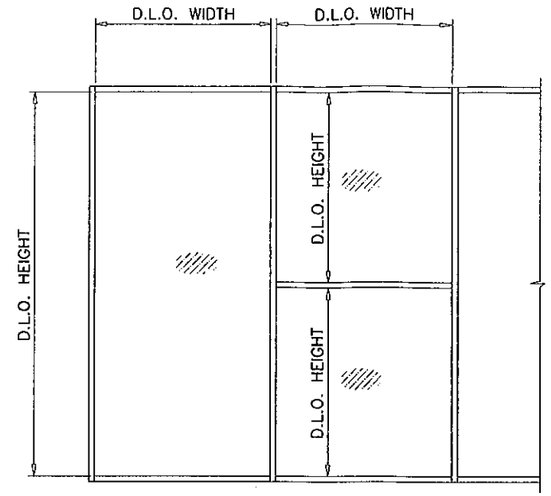


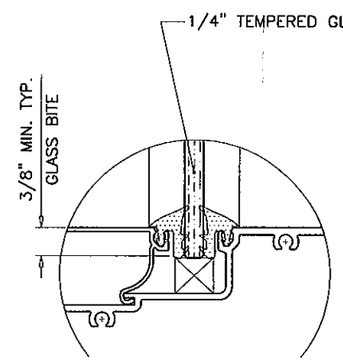


GLAZING DETAIL

NOTE:
GLASS CAPACITIES ON THIS SHEET ARE BASED ON ASTM E1300-04 (3 SEC. GUSTS).

GLASS CAPACITY CHART

Engr: JAVAD AHMAD
CIVIL
FLA. RE # 70592
C.A.N. 3538

JAN 30 2012

PRODUCT REVISED
as complying with the Florida Building Code
Acceptance No 11-1208.02
Expiration Date March 24, 2016
By Manuel Perez
Miami Dade Product Control


AL-FAROOQ CORPORATION
ENGINEERS & PRODUCT DEVELOPMENT
1235 S.W. 87 AVE
MIAMI, FLORIDA 33174
TEL. (305) 264-8100 FAX. (305) 262-6978


STORE\W05-11SM

SERIES SM-45 ALUMINUM STOREFRONT SYSTEM (N.L.)


SMI Aluminum Systems, LLC.
11305 N.W. 128 STREET
MEDLEY, FL. 33178
TEL. (305) 888-6288 FAX. (305) 888-6289


revisions:

| no | date | by | description |
|---|---|---|---|
| A | 10.08.10 | | GENERAL REVISION |
| B | 01.25.12 | | NO CHANGE THIS SHEET |

date: 03-01-05
scale: –
dr. by: HAMID
chk. by:

drawing no.
W05-11

## MULLION LOAD CAPACITY – PSF
### WITHOUT INTERMEDIATE HORIZONTALS

| NOMINAL DIMS. | | WITHOUT REINFORCING | | WITH REINFORCING | |
|---|---|---|---|---|---|
| WIDTH (W) | FRAME HEIGHT | EXT.(+) | INT.(–) | EXT.(+) | INT.(–) |
| 24" | 60" | 80.0 | 120.0 | 80.0 | 120.0 |
| 30" | | 80.0 | 120.0 | 80.0 | 120.0 |
| 36" | | 80.0 | 120.0 | 80.0 | 120.0 |
| 42" | | 80.0 | 120.0 | 80.0 | 120.0 |
| 48" | | 80.0 | 120.0 | 80.0 | 120.0 |
| 54" | | 80.0 | 120.0 | 80.0 | 120.0 |
| 60" | | 80.0 | 120.0 | 80.0 | 120.0 |
| 66" | | 80.0 | 120.0 | 80.0 | 120.0 |
| 72" | | 80.0 | 120.0 | 80.0 | 120.0 |
| 24" | 66" | 80.0 | 120.0 | 80.0 | 120.0 |
| 30" | | 80.0 | 120.0 | 80.0 | 120.0 |
| 36" | | 80.0 | 120.0 | 80.0 | 120.0 |
| 42" | | 80.0 | 120.0 | 80.0 | 120.0 |
| 48" | | 80.0 | 116.7 | 80.0 | 120.0 |
| 54" | | 80.0 | 110.1 | 80.0 | 120.0 |
| 60" | | 80.0 | 106.3 | 80.0 | 120.0 |
| 66" | | 80.0 | 105.0 | 80.0 | 120.0 |
| 72" | | 80.0 | 105.0 | 80.0 | 120.0 |
| 24" | 72" | 80.0 | 120.0 | 80.0 | 120.0 |
| 30" | | 80.0 | 120.0 | 80.0 | 120.0 |
| 36" | | 80.0 | 116.1 | 80.0 | 120.0 |
| 42" | | 80.0 | 102.9 | 80.0 | 120.0 |
| 48" | | 80.0 | 93.7 | 80.0 | 120.0 |
| 54" | | 80.0 | 87.4 | 80.0 | 120.0 |
| 60" | | 80.0 | 83.3 | 80.0 | 120.0 |
| 66" | | 80.0 | 80.9 | 80.0 | 120.0 |
| 72" | | 80.0 | 80.0 | 80.0 | 120.0 |
| 24" | 78" | 80.0 | 120.0 | 80.0 | 120.0 |
| 30" | | 80.0 | 113.4 | 80.0 | 120.0 |
| 36" | | 80.0 | 96.6 | 80.0 | 120.0 |
| 42" | | 80.0 | 85.2 | 80.0 | 120.0 |
| 48" | | 77.1 | 77.1 | 80.0 | 120.0 |
| 54" | | 71.3 | 71.3 | 80.0 | 120.0 |
| 60" | | 67.2 | 67.2 | 80.0 | 120.0 |
| 66" | | 64.5 | 64.5 | 80.0 | 120.0 |
| 72" | | 62.9 | 62.9 | 80.0 | 120.0 |
| 24" | 84" | 80.0 | 118.4 | 80.0 | 120.0 |
| 30" | | 80.0 | 96.1 | 80.0 | 120.0 |
| 36" | | 80.0 | 81.7 | 80.0 | 120.0 |
| 42" | | 71.6 | 71.6 | 80.0 | 120.0 |
| 48" | | 64.5 | 64.5 | 80.0 | 120.0 |
| 54" | | 59.3 | 59.3 | 80.0 | 116.1 |
| 60" | | 55.4 | 55.4 | 80.0 | 108.6 |
| 66" | | 52.7 | 52.7 | 80.0 | 103.3 |
| 24" | 90" | 80.0 | 101.8 | 80.0 | 120.0 |
| 30" | | 80.0 | 82.5 | 80.0 | 120.0 |
| 36" | | 69.9 | 69.9 | 80.0 | 120.0 |
| 42" | | 61.1 | 61.1 | 80.0 | 120.0 |
| 48" | | 54.8 | 54.8 | 80.0 | 108.3 |
| 54" | | 50.1 | 50.1 | 80.0 | 99.1 |
| 60" | | 46.6 | 46.6 | 80.0 | 92.1 |

## MULLION LOAD CAPACITY – PSF
### WITHOUT INTERMEDIATE HORIZONTALS

| NOMINAL DIMS. | | WITHOUT REINFORCING | | WITH REINFORCING | |
|---|---|---|---|---|---|
| WIDTH (W) | FRAME HEIGHT | EXT.(+) | INT.(–) | EXT.(+) | INT.(–) |
| 24" | 96" | 80.0 | 86.1 | 80.0 | 120.0 |
| 30" | | 69.9 | 69.9 | 80.0 | 120.0 |
| 36" | | 59.3 | 59.3 | 80.0 | 120.0 |
| 42" | | 51.9 | 51.9 | 80.0 | 105.3 |
| 48" | | 45.6 | 46.6 | 80.0 | 94.0 |
| 54" | | 42.6 | 42.6 | 80.0 | 85.6 |
| 60" | | 39.6 | 39.6 | 79.3 | 79.3 |
| 24" | 102" | 71.6 | 71.6 | 80.0 | 120.0 |
| 30" | | 58.0 | 58.0 | 80.0 | 120.0 |
| 36" | | 49.1 | 49.1 | 80.0 | 106.3 |
| 42" | | 42.9 | 42.9 | 80.0 | 92.5 |
| 48" | | 38.4 | 38.4 | 80.0 | 82.4 |
| 54" | | 35.0 | 35.0 | 74.9 | 74.9 |
| 24" | 108" | 60.2 | 60.2 | 80.0 | 120.0 |
| 30" | | 48.7 | 48.7 | 80.0 | 112.1 |
| 36" | | 41.1 | 41.1 | 80.0 | 94.4 |
| 42" | | 35.8 | 35.8 | 80.0 | 82.0 |
| 48" | | 32.0 | 32.0 | 72.9 | 72.9 |
| 24" | 114" | 51.1 | 51.1 | 80.0 | 120.0 |
| 30" | | 41.3 | 41.3 | 80.0 | 100.3 |
| 36" | | 34.8 | 34.8 | 80.0 | 84.4 |
| 42" | | 30.3 | 30.3 | 73.2 | 73.2 |
| 48" | | 27.0 | 27.0 | 65.0 | 65.0 |
| 24" | 120" | 43.7 | 43.7 | 80.0 | 112.1 |
| 30" | | 35.3 | 35.3 | 80.0 | 90.3 |
| 36" | | 29.7 | 29.7 | 76.0 | 76.0 |
| 42" | | 25.8 | 25.8 | 65.8 | 65.8 |
| 48" | | 23.0 | 23.0 | 58.3 | 58.3 |
| 24" | 126" | 37.7 | 37.7 | 80.0 | 101.6 |
| 30" | | 30.4 | 30.4 | 80.0 | 81.8 |
| 36" | | 25.6 | 25.6 | 68.7 | 68.7 |
| 42" | | 22.2 | 22.2 | 59.5 | 59.5 |
| 24" | 132" | 32.8 | 32.8 | 80.0 | 92.4 |
| 30" | | 26.4 | 26.4 | 74.4 | 74.4 |
| 36" | | 22.2 | 22.2 | 62.5 | 62.5 |
| 42" | | – | – | 54.0 | 54.0 |
| 24" | 138" | 28.6 | 28.6 | 80.0 | 84.5 |
| 30" | | 23.1 | 23.1 | 68.0 | 68.0 |
| 36" | | – | – | 57.0 | 57.0 |
| 24" | 144" | 25.2 | 25.2 | 77.5 | 77.5 |
| 30" | | 20.3 | 20.3 | 62.3 | 62.3 |
| 36" | | – | – | 52.3 | 52.3 |

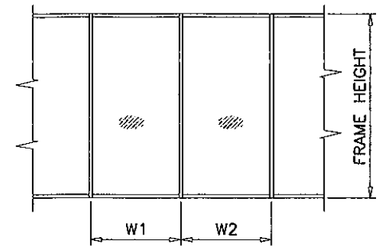


$$\text{WIDTH (W)} = \frac{W1 + W2}{2}$$

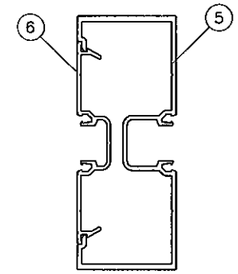


MULLION
W/O REINFORCING

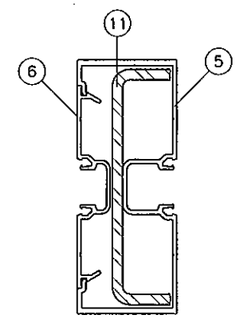


MULLION
W/ REINFORCING

| Ix IN^4 | Sx IN^3 |
|---|---|
| 2.9100 | 1.2932 |

| | Ix IN^4 | Sx IN^3 |
|---|---|---|
| ALUMINUM | 2.9100 | 1.2932 |
| STEEL | 2.2599 | 1.0635 |
| TOTAL<br>Ix ALUM + Ix STL X 2.9 | 9.4637 | |

MULLION CAPACITY CHART

Engr: JAVAD AHMAD
CIVIL
FLA. PE # 70592
C.A.N. 3538

JAN 30 2012

PRODUCT REVISED
as complying with the Florida
Building Code
Acceptance No 11-1208.02
Expiration Date March 28, 2016
By Maurice Rise
Miami Dade Product Control


AL-FAROOQ CORPORATION
ENGINEERS & PRODUCT DEVELOPMENT
1235 S.W. 87 AVE
MIAMI, FLORIDA 33174
TEL. (305) 264-8100 FAX. (305) 262-6978
STORE\W05-11SM


SERIES SM-45 ALUMINUM STOREFRONT SYSTEM (N.L.)


SMI Aluminum Systems, LLC.
11305 N.W. 128 STREET
MEDLEY, FL. 33178
TEL. (305) 888-6288 FAX. (305) 888-6289


revisions:

| no | date | by | description |
|---|---|---|---|
| A | 10.08.10 | | GENERAL REVISION |
| B | 01.25.12 | | NO CHANGE THIS SHEET |

date: 03-01-05
scale: –
dr. by: HAMID
chk. by:

drawing no.
W05-11

## MULLION LOAD CAPACITY – PSF
## WITH INTERMEDIATE HORIZONTALS

| NOMINAL DIMS. | | WITHOUT REINFORCING | | WITH REINFORCING | |
|---|---|---|---|---|---|
| WIDTH (W) | FRAME HEIGHT | EXT.(+) | INT.(–) | EXT.(+) | INT.(–) |
| 24" | 60" | 80.0 | 120.0 | 80.0 | 120.0 |
| 30" | | 80.0 | 120.0 | 80.0 | 120.0 |
| 36" | | 80.0 | 120.0 | 80.0 | 120.0 |
| 42" | | 80.0 | 120.0 | 80.0 | 120.0 |
| 48" | | 80.0 | 117.7 | 80.0 | 120.0 |
| 54" | | 80.0 | 104.6 | 80.0 | 120.0 |
| 60" | | 80.0 | 94.2 | 80.0 | 120.0 |
| 66" | | 80.0 | 85.6 | 80.0 | 120.0 |
| 72" | | 78.5 | 78.5 | 80.0 | 120.0 |
| 24" | 66" | 80.0 | 120.0 | 80.0 | 120.0 |
| 30" | | 80.0 | 120.0 | 80.0 | 120.0 |
| 36" | | 80.0 | 120.0 | 80.0 | 120.0 |
| 42" | | 80.0 | 110.0 | 80.0 | 120.0 |
| 48" | | 80.0 | 96.2 | 80.0 | 120.0 |
| 54" | | 80.0 | 85.5 | 80.0 | 120.0 |
| 60" | | 77.0 | 77.0 | 80.0 | 120.0 |
| 66" | | 70.0 | 70.0 | 80.0 | 120.0 |
| 72" | | 64.1 | 64.1 | 80.0 | 120.0 |
| 24" | 72" | 80.0 | 120.0 | 80.0 | 120.0 |
| 30" | | 80.0 | 120.0 | 80.0 | 120.0 |
| 36" | | 80.0 | 106.7 | 80.0 | 120.0 |
| 42" | | 80.0 | 91.4 | 80.0 | 120.0 |
| 48" | | 80.0 | 80.0 | 80.0 | 120.0 |
| 54" | | 71.1 | 71.1 | 80.0 | 120.0 |
| 60" | | 64.0 | 64.0 | 80.0 | 120.0 |
| 66" | | 58.2 | 58.2 | 80.0 | 111.7 |
| 72" | | 53.3 | 53.3 | 80.0 | 102.4 |
| 24" | 78" | 80.0 | 120.0 | 80.0 | 120.0 |
| 30" | | 80.0 | 107.9 | 80.0 | 120.0 |
| 36" | | 80.0 | 90.0 | 80.0 | 120.0 |
| 42" | | 77.1 | 77.1 | 80.0 | 120.0 |
| 48" | | 67.5 | 67.5 | 80.0 | 120.0 |
| 54" | | 60.0 | 60.0 | 80.0 | 116.3 |
| 60" | | 54.0 | 54.0 | 80.0 | 104.7 |
| 66" | | 49.1 | 49.1 | 80.0 | 95.2 |
| 72" | | 45.0 | 45.0 | 80.0 | 87.2 |
| 24" | 84" | 80.0 | 115.2 | 80.0 | 120.0 |
| 30" | | 80.0 | 92.2 | 80.0 | 120.0 |
| 36" | | 76.8 | 76.8 | 80.0 | 120.0 |
| 42" | | 65.8 | 65.8 | 80.0 | 120.0 |
| 48" | | 57.6 | 57.6 | 80.0 | 112.8 |
| 54" | | 51.2 | 51.2 | 80.0 | 100.3 |
| 60" | | 46.1 | 46.1 | 80.0 | 90.3 |
| 66" | | 41.9 | 41.9 | 80.0 | 82.1 |
| 24" | 90" | 80.0 | 99.4 | 80.0 | 120.0 |
| 30" | | 79.5 | 79.5 | 80.0 | 120.0 |
| 36" | | 66.2 | 66.2 | 80.0 | 120.0 |
| 42" | | 56.8 | 56.8 | 80.0 | 112.3 |
| 48" | | 49.7 | 49.7 | 80.0 | 98.3 |
| 54" | | 44.2 | 44.2 | 80.0 | 87.4 |
| 60" | | 39.7 | 39.7 | 80.0 | 78.6 |

## MULLION LOAD CAPACITY – PSF
## WITH INTERMEDIATE HORIZONTALS

| NOMINAL DIMS. | | WITHOUT REINFORCING | | WITH REINFORCING | |
|---|---|---|---|---|---|
| WIDTH (W) | FRAME HEIGHT | EXT.(+) | INT.(–) | EXT.(+) | INT.(–) |
| 24" | 96" | 80.0 | 84.2 | 80.0 | 120.0 |
| 30" | | 67.4 | 67.4 | 80.0 | 120.0 |
| 36" | | 56.1 | 56.1 | 80.0 | 115.2 |
| 42" | | 48.1 | 48.1 | 80.0 | 98.7 |
| 48" | | 42.1 | 42.1 | 80.0 | 86.4 |
| 54" | | 37.4 | 37.4 | 76.8 | 76.8 |
| 60" | | 33.7 | 33.7 | 69.1 | 69.1 |
| 24" | 102" | 70.2 | 70.2 | 80.0 | 120.0 |
| 30" | | 56.2 | 56.2 | 80.0 | 120.0 |
| 36" | | 46.8 | 46.8 | 80.0 | 102.0 |
| 42" | | 40.1 | 40.1 | 80.0 | 87.5 |
| 48" | | 35.1 | 35.1 | 76.5 | 76.5 |
| 54" | | 31.2 | 31.2 | 68.0 | 68.0 |
| 24" | 108" | 59.1 | 59.1 | 80.0 | 120.0 |
| 30" | | 47.3 | 47.3 | 80.0 | 109.2 |
| 36" | | 39.4 | 39.4 | 80.0 | 91.0 |
| 42" | | 33.8 | 33.8 | 78.0 | 78.0 |
| 48" | | 29.6 | 29.6 | 68.3 | 68.3 |
| 24" | 114" | 50.3 | 50.3 | 80.0 | 120.0 |
| 30" | | 40.2 | 40.2 | 80.0 | 98.0 |
| 36" | | 33.5 | 33.5 | 80.0 | 81.7 |
| 42" | | 28.7 | 28.7 | 70.0 | 70.0 |
| 48" | | 25.1 | 25.1 | 61.3 | 61.3 |
| 24" | 120" | 43.1 | 43.1 | 80.0 | 110.6 |
| 30" | | 34.5 | 34.5 | 80.0 | 88.5 |
| 36" | | 28.7 | 28.7 | 73.7 | 73.7 |
| 42" | | 24.6 | 24.6 | 63.2 | 63.2 |
| 48" | | 21.6 | 21.6 | 55.3 | 55.3 |
| 24" | 126" | 37.2 | 37.2 | 80.0 | 100.3 |
| 30" | | 29.8 | 29.8 | 80.0 | 80.2 |
| 36" | | 24.8 | 24.8 | 66.9 | 66.9 |
| 42" | | 21.3 | 21.3 | 57.3 | 57.3 |
| 24" | 132" | 32.4 | 32.4 | 80.0 | 91.4 |
| 30" | | 25.9 | 25.9 | 73.1 | 73.1 |
| 36" | | 21.6 | 21.6 | 60.9 | 60.9 |
| 42" | | – | – | 52.2 | 52.2 |
| 24" | 138" | 28.3 | 28.3 | 80.0 | 83.6 |
| 30" | | 22.7 | 22.7 | 66.9 | 66.9 |
| 36" | | – | – | 55.7 | 55.7 |
| 24" | 144" | 24.9 | 24.9 | 76.8 | 76.8 |
| 30" | | – | – | 61.4 | 61.4 |
| 36" | | – | – | 51.2 | 51.2 |

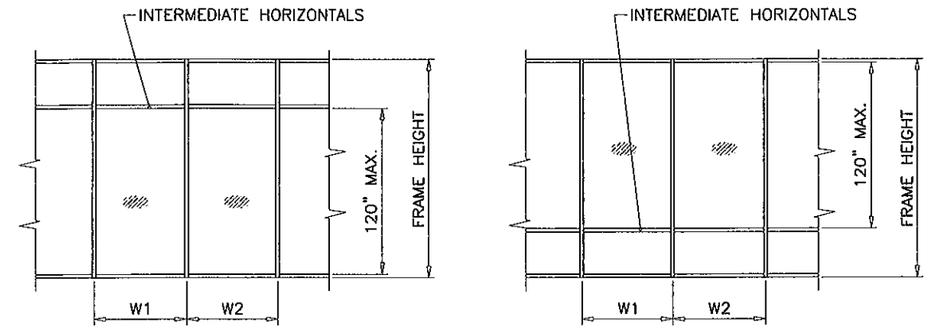


$$\text{WIDTH (W)} = \frac{W1 + W2}{2}$$

MAX. SPACING BETWEEN HORIZONTALS ≤ 120 INCHES

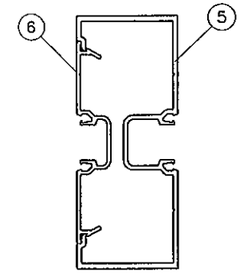


MULLION
W/O REINFORCING

| Ix IN^4 | Sx IN^3 |
|---|---|
| 2.9100 | 1.2932 |

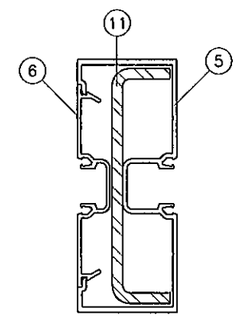


MULLION
W/ REINFORCING

| | Ix IN^4 | Sx IN^3 |
|---|---|---|
| ALUMINUM | 2.9100 | 1.2932 |
| STEEL | 2.2599 | 1.0635 |
| TOTAL<br>Ix ALUM + Ix STL X 2.9 | 9.4637 | |

MULLION CAPACITY CHART

Engr: JAVAD AHMADI
CIVIL
FLA. PE # 70592
C.A.N. 3538

JAN 30 2012

PRODUCT REVISED
as complying with the Florida
Building Code
Acceptance No 11-1208.02
Expiration Date MARCH 24, 2016
By: Manuel Perez
Miami Dade Product Control


AL-FAROOQ CORPORATION
ENGINEERS & PRODUCT DEVELOPMENT
1235 S.W. 87 AVE
MIAMI, FLORIDA 33174
TEL. (305) 264-8100 FAX. (305) 262-6978
STORE\W05-11SM

SERIES SM-45 ALUMINUM STOREFRONT SYSTEM (N.I.)
SMI Aluminum Systems, LLC.
11305 N.W. 128 STREET
MEDLEY, FL. 33178
TEL. (305) 888-6288 FAX. (305) 888-6289


revisions:

| no | date | by | description |
|---|---|---|---|
| A | 10.08.10 | | GENERAL REVISION |
| B | 01.25.12 | | NO CHANGE THIS SHEET |

date: 03-01-05
scale: –
dr. by: HAMID
chk. by:

drawing no.
W05-11

| ANCHOR LOAD CAPACITY – PSF EXT.(+) & INT.(–) | | | | | | |
|---|---|---|---|---|---|---|
| NOMINAL DIMS. | | ANCHORS TYPE 'A' | | | TYPE 'B' & 'C' | |
| WIDTH (W) | FRAME HEIGHT | A2 | A3 | A4 | B2/C2 | B3/C3 |
| 24" | 60" | 120.0 | 120.0 | 120.0 | 120.0 | 120.0 |
| 30" | | 120.0 | 120.0 | 120.0 | 120.0 | 120.0 |
| 36" | | 120.0 | 120.0 | 120.0 | 120.0 | 120.0 |
| 42" | | 103.0 | 120.0 | 120.0 | 120.0 | 120.0 |
| 48" | | 108.0 | 120.0 | 120.0 | 120.0 | 120.0 |
| 54" | | 96.0 | 120.0 | 120.0 | 120.0 | 120.0 |
| 60" | | 101.0 | 115.0 | 120.0 | 120.0 | 120.0 |
| 66" | | 92.0 | 118.0 | 120.0 | 120.0 | 120.0 |
| 72" | | 84.0 | 108.0 | 120.0 | 120.0 | 120.0 |
| 24" | 66" | 120.0 | 120.0 | 120.0 | 120.0 | 120.0 |
| 30" | | 120.0 | 120.0 | 120.0 | 120.0 | 120.0 |
| 36" | | 109.0 | 120.0 | 120.0 | 120.0 | 120.0 |
| 42" | | 94.0 | 120.0 | 120.0 | 120.0 | 120.0 |
| 48" | | 98.0 | 115.0 | 120.0 | 120.0 | 120.0 |
| 54" | | 87.0 | 116.0 | 120.0 | 120.0 | 120.0 |
| 60" | | 92.0 | 105.0 | 120.0 | 120.0 | 120.0 |
| 66" | | 83.0 | 107.0 | 120.0 | 120.0 | 120.0 |
| 72" | | 76.0 | 98.0 | 120.0 | 120.0 | 120.0 |
| 24" | 72" | 120.0 | 120.0 | 120.0 | 120.0 | 120.0 |
| 30" | | 120.0 | 120.0 | 120.0 | 120.0 | 120.0 |
| 36" | | 100.0 | 120.0 | 120.0 | 120.0 | 120.0 |
| 42" | | 86.0 | 120.0 | 120.0 | 120.0 | 120.0 |
| 48" | | 90.0 | 105.0 | 120.0 | 120.0 | 120.0 |
| 54" | | 80.0 | 107.0 | 120.0 | 120.0 | 120.0 |
| 60" | | 84.0 | 96.0 | 120.0 | 120.0 | 120.0 |
| 66" | | 76.0 | 98.0 | 109.0 | 120.0 | 120.0 |
| 72" | | 70.0 | 90.0 | 110.0 | 119.0 | 120.0 |
| 24" | 78" | 120.0 | 120.0 | 120.0 | 120.0 | 120.0 |
| 30" | | 111.0 | 120.0 | 120.0 | 120.0 | 120.0 |
| 36" | | 92.0 | 120.0 | 120.0 | 120.0 | 120.0 |
| 42" | | 79.0 | 111.0 | 120.0 | 120.0 | 120.0 |
| 48" | | 83.0 | 97.0 | 120.0 | 120.0 | 120.0 |
| 54" | | 74.0 | 98.0 | 111.0 | 120.0 | 120.0 |
| 60" | | 78.0 | 89.0 | 111.0 | 120.0 | 120.0 |
| 66" | | 70.0 | 91.0 | 101.0 | 120.0 | 120.0 |
| 72" | | 65.0 | 83.0 | 102.0 | 110.0 | 120.0 |
| 24" | 84" | 120.0 | 120.0 | 120.0 | 120.0 | 120.0 |
| 30" | | 103.0 | 120.0 | 120.0 | 120.0 | 120.0 |
| 36" | | 86.0 | 120.0 | 120.0 | 120.0 | 120.0 |
| 42" | | 73.0 | 103.0 | 120.0 | 120.0 | 120.0 |
| 48" | | 77.0 | 90.0 | 116.0 | 120.0 | 120.0 |
| 54" | | 69.0 | 91.0 | 103.0 | 117.0 | 120.0 |
| 60" | | 72.0 | 82.0 | 103.0 | 120.0 | 120.0 |
| 66" | | 65.0 | 84.0 | 94.0 | 111.0 | 120.0 |
| 24" | 90" | 120.0 | 120.0 | 120.0 | 120.0 | 120.0 |
| 30" | | 96.0 | 120.0 | 120.0 | 120.0 | 120.0 |
| 36" | | 80.0 | 112.0 | 120.0 | 120.0 | 120.0 |
| 42" | | 69.0 | 96.0 | 120.0 | 117.0 | 120.0 |
| 48" | | 72.0 | 84.0 | 108.0 | 120.0 | 120.0 |
| 54" | | 64.0 | 85.0 | 96.0 | 109.0 | 120.0 |
| 60" | | 67.0 | 77.0 | 96.0 | 114.0 | 120.0 |

| ANCHOR LOAD CAPACITY – PSF EXT.(+) & INT.(–) | | | | | | |
|---|---|---|---|---|---|---|
| NOMINAL DIMS. | | ANCHORS TYPE 'A' | | | TYPE 'B' & 'C' | |
| WIDTH (W) | FRAME HEIGHT | A2 | A3 | A4 | B2/C2 | B3/C3 |
| 24" | 96" | 113.0 | 120.0 | 120.0 | 120.0 | 120.0 |
| 30" | | 90.0 | 120.0 | 120.0 | 120.0 | 120.0 |
| 36" | | 75.0 | 105.0 | 120.0 | 120.0 | 120.0 |
| 42" | | 64.0 | 90.0 | 116.0 | 109.0 | 120.0 |
| 48" | | 68.0 | 79.0 | 101.0 | 115.0 | 120.0 |
| 54" | | 60.0 | 80.0 | 90.0 | 102.0 | 120.0 |
| 60" | | 63.0 | 72.0 | 90.0 | 107.0 | 120.0 |
| 24" | 102" | 106.0 | 120.0 | 120.0 | 120.0 | 120.0 |
| 30" | | 85.0 | 119.0 | 120.0 | 120.0 | 120.0 |
| 36" | | 71.0 | 99.0 | 120.0 | 120.0 | 120.0 |
| 42" | | 61.0 | 85.0 | 109.0 | 103.0 | 120.0 |
| 48" | | 64.0 | 74.0 | 95.0 | 108.0 | 120.0 |
| 54" | | 56.0 | 75.0 | 85.0 | 96.0 | 120.0 |
| 24" | 108" | 100.0 | 120.0 | 120.0 | 120.0 | 120.0 |
| 30" | | 80.0 | 112.0 | 120.0 | 120.0 | 120.0 |
| 36" | | 67.0 | 93.0 | 120.0 | 113.0 | 120.0 |
| 42" | | 57.0 | 80.0 | 103.0 | 97.0 | 120.0 |
| 48" | | 60.0 | 70.0 | 90.0 | 102.0 | 119.0 |
| 24" | 114" | 95.0 | 120.0 | 120.0 | 120.0 | 120.0 |
| 30" | | 76.0 | 106.0 | 120.0 | 120.0 | 120.0 |
| 36" | | 63.0 | 88.0 | 114.0 | 107.0 | 120.0 |
| 42" | | 54.0 | 76.0 | 97.0 | 92.0 | 120.0 |
| 48" | | 57.0 | 66.0 | 85.0 | 97.0 | 113.0 |
| 24" | 120" | 90.0 | 120.0 | 120.0 | 120.0 | 120.0 |
| 30" | | 72.0 | 101.0 | 120.0 | 120.0 | 120.0 |
| 36" | | 60.0 | 84.0 | 108.0 | 102.0 | 120.0 |
| 42" | | 51.0 | 72.0 | 93.0 | 87.0 | 120.0 |
| 48" | | 54.0 | 63.0 | 81.0 | 92.0 | 107.0 |
| 24" | 126" | 86.0 | 120.0 | 120.0 | 120.0 | 120.0 |
| 30" | | 69.0 | 96.0 | 120.0 | 117.0 | 120.0 |
| 36" | | 57.0 | 80.0 | 103.0 | 97.0 | 120.0 |
| 42" | | 49.0 | 69.0 | 88.0 | 83.0 | 117.0 |
| 24" | 132" | 82.0 | 115.0 | 120.0 | 120.0 | 120.0 |
| 30" | | 65.0 | 92.0 | 118.0 | 111.0 | 120.0 |
| 36" | | 55.0 | 76.0 | 98.0 | 93.0 | 120.0 |
| 42" | | 47.0 | 65.0 | 84.0 | 79.0 | 111.0 |
| 24" | 138" | 78.0 | 110.0 | 120.0 | 120.0 | 120.0 |
| 30" | | 63.0 | 88.0 | 113.0 | 106.0 | 120.0 |
| 36" | | 52.0 | 73.0 | 94.0 | 89.0 | 120.0 |
| 24" | 144" | 75.0 | 105.0 | 120.0 | 120.0 | 120.0 |
| 30" | | 60.0 | 84.0 | 108.0 | 102.0 | 120.0 |
| 36" | | 50.0 | 70.0 | 90.0 | 85.0 | 119.0 |

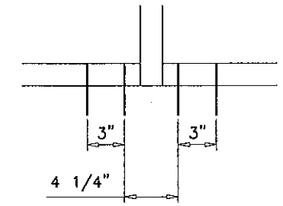


A2, B2, C2

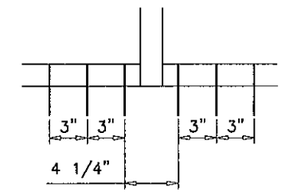


A3, B3, C3

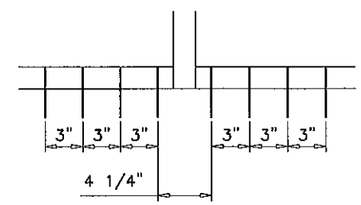


A4

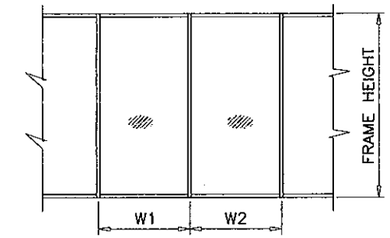


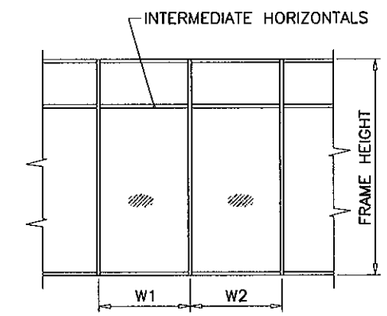


$$\text{WIDTH (W)} = \frac{W1 + W2}{2}$$

ANCHORS TYPES: SEE SHEET 8 FOR DESCRIPTION

A2 = (2) ANCHORS TYPE 'A' AT EACH SIDE OF MULLION
A3 = (3) ANCHORS TYPE 'A' AT EACH SIDE OF MULLION
A4 = (4) ANCHORS TYPE 'A' AT EACH SIDE OF MULLION

B2 = (2) ANCHORS TYPE 'B' AT EACH SIDE OF MULLION
B3 = (3) ANCHORS TYPE 'B' AT EACH SIDE OF MULLION

C2 = (2) ANCHORS TYPE 'C' AT EACH SIDE OF MULLION
C3 = (3) ANCHORS TYPE 'C' AT EACH SIDE OF MULLION

ALL OTHER ANCHORS TO BE SPACED AS PER ELEVATION.

ANCHOR CAPACITY CHART

Engr: JAVAD AHMAD
CIVIL
FLA. PE # 70592
C.A.N. 3538

JAN 30 2012

PRODUCT REVISED
as complying with the Florida Building Code
Acceptance No 11-1208.02
Expiration Date March 22, 2016
By Miami-Dade Product Control


AL-FAROOQ CORPORATION
ENGINEERS & PRODUCT DEVELOPMENT
1235 S.W. 87 AVE
MIAMI, FLORIDA 33174
TEL. (305) 264-8100 FAX. (305) 262-6978
STORE\W05-11SM

SERIES SM-45 ALUMINUM STOREFRONT SYSTEM (N.L.)
SMI Aluminum Systems, LLC.
11305 N.W. 128 STREET
MEDLEY, FL. 33178
TEL. (305) 888-6288 FAX. (305) 888-6289


revisions:

| no | date | by | description |
|---|---|---|---|
| A | 10.08.10 | | GENERAL REVISION |
| B | 01.25.12 | | NO CHANGE THIS SHEET |

date: 03-01-05
scale: –
dr. by: HAMID
chk. by:

drawing no. W05-11

| DOOR MULLION LOAD CAPACITY-PSF | | | |
|---|---|---|---|
| WIDTH (W) INCHES | FRAME HEIGHT INCHES | WITHOUT REINF. EXT.(+) & INT.(−) | WITH REINF. EXT.(+) & INT.(−) |
| 30 | 80 | 102.6 | 120.0 |
| 36 | | 85.5 | 120.0 |
| 42 | | 73.3 | 120.0 |
| 48 | | 64.1 | 120.0 |
| 54 | | 57.0 | 108.1 |
| 60 | | 51.3 | 97.3 |
| 30 | 84 | 92.4 | 120.0 |
| 36 | | 77.0 | 120.0 |
| 42 | | 66.0 | 120.0 |
| 48 | | 57.8 | 110.3 |
| 54 | | 51.3 | 98.0 |
| 60 | | 46.2 | 88.2 |
| 30 | 90 | 79.7 | 120.0 |
| 36 | | 66.4 | 120.0 |
| 42 | | 56.9 | 109.8 |
| 48 | | 49.8 | 96.1 |
| 54 | | 44.3 | 85.4 |
| 60 | | 39.9 | 76.9 |
| 30 | 96 | 67.4 | 120.0 |
| 36 | | 56.1 | 112.6 |
| 42 | | 48.1 | 96.5 |
| 48 | | 42.1 | 84.4 |
| 54 | | 37.4 | 75.1 |
| 60 | | 33.7 | 67.5 |
| 30 | 102 | 56.2 | 119.7 |
| 36 | | 46.8 | 99.7 |
| 42 | | 40.1 | 85.5 |
| 48 | | 35.1 | 74.8 |
| 54 | | 31.2 | 66.5 |
| 60 | | 28.1 | 59.8 |
| 30 | 108 | 47.3 | 106.7 |
| 36 | | 39.4 | 89.0 |
| 42 | | 33.8 | 76.2 |
| 48 | | 29.6 | 66.7 |
| 54 | | 26.3 | 59.3 |
| 60 | | 23.7 | 53.4 |
| 30 | 114 | 40.2 | 95.8 |
| 36 | | 33.5 | 79.8 |
| 42 | | 28.7 | 68.4 |
| 48 | | 25.1 | 59.9 |
| 54 | | 22.3 | 53.2 |
| 60 | | 20.1 | 47.9 |
| 30 | 120 | 34.5 | 86.5 |
| 36 | | 28.7 | 72.1 |
| 42 | | 24.6 | 61.8 |
| 48 | | 21.6 | 54.0 |
| 54 | | 19.2 | 48.0 |
| 60 | | 17.2 | 43.2 |

| ANCHOR TYPES | TOTAL NO. OF ANCHORS AT DOOR MULLION HEAD |
|---|---|
| A | 8 |
| B | 5 |
| C | 4 |

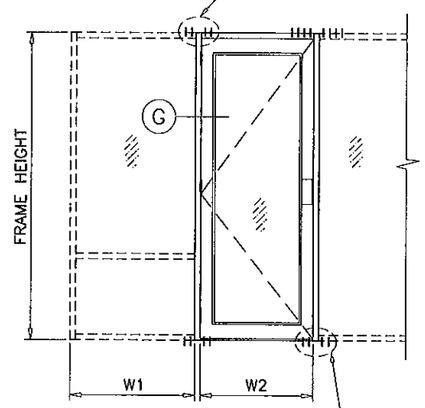


WIDTH (W) = $\frac{W1 + W2}{2}$

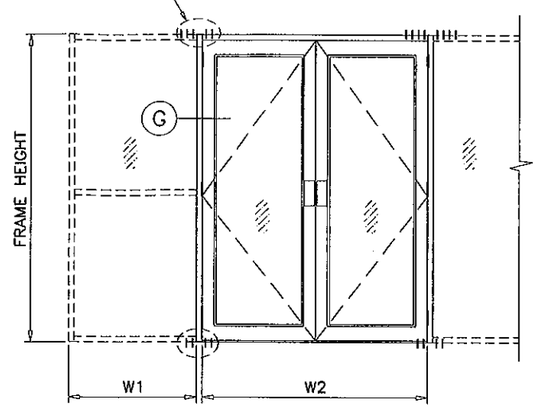


WIDTH (W) = $\frac{W1}{2} + \frac{W2}{4}$

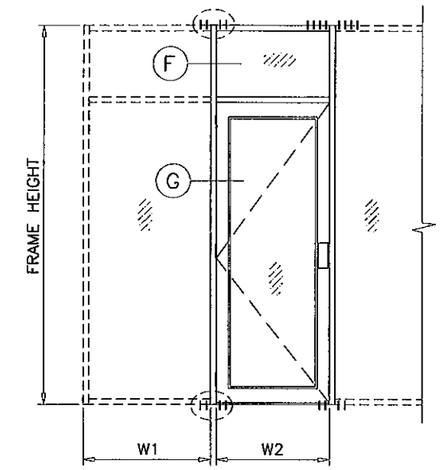


WIDTH (W) = $\frac{W1 + W2}{2}$

| ANCHOR TYPE | TOTAL NO. OF ANCHORS AT DOOR MULLION SILL |
|---|---|
| B | 4 |

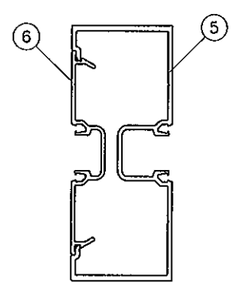


DOOR MULLION
W/O REINFORCING

| Ix IN^4 | Sx IN^3 |
|---|---|
| 2.9100 | 1.2932 |

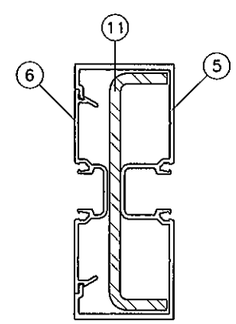


DOOR MULLION
W/ REINFORCING

| | Ix IN^4 | Sx IN^3 |
|---|---|---|
| ALUMINUM | 2.9100 | 1.2932 |
| STEEL | 2.2599 | 1.0635 |
| TOTAL Ix ALUM + Ix STL X 2.9 | 9.4637 | |

DOOR MULLION CAPACITY CHART

Engr: JAVAD AHMAD
CIVIL
FLA. PE # 70592
C.A.N. 3538

JAN 30 2012

PRODUCT REVISED
as complying with the Florida
Building Code
Acceptance No 11-1208.02
Expiration Date MARCH 24, 2016
By Miami Dade Product Control


AL-FAROOQ CORPORATION
ENGINEERS & PRODUCT DEVELOPMENT
1235 S.W. 87 AVE
MIAMI, FLORIDA 33174
TEL. (305) 264-8100 FAX. (305) 262-6978


STORE\W05-11SM

SERIES SM-45 ALUMINUM STOREFRONT SYSTEM (N.I.)


SMI Aluminum Systems, LLC.
11305 N.W. 128 STREET
MEDLEY, FL. 33178
TEL. (305) 888-6288 FAX. (305) 888-6289


revisions:

| no | date | by | description |
|---|---|---|---|
| B | 01.25.12 | | GENERAL REVISION |

date: 03-01-05
scale: -
dr. by: HAMID
chk. by:

drawing no.
W05-11

| DOOR MULLION LOAD CAPACITY | | | | |
|---|---|---|---|---|
| NOMINAL DIMS. | | | | LOADS-PSF |
| DOOR WIDTH W2 | SIDELITE WIDTH W1 | DOOR HEIGHT A | FRAME SPAN L | EXT. (+) INT. (-) |
| 60" | 30" | 80" | 90" | 115.0 |
| | 36" | | | 107.8 |
| | 42" | | | 101.5 |
| | 48" | | | 95.9 |
| | 54" | | | 90.8 |
| 72" | 30" | | | 102.1 |
| | 36" | | | 96.4 |
| | 42" | | | 91.3 |
| | 48" | | | 76.8 |
| | 54" | | | 82.6 |
| 60" | 30" | 80" | 96" | 109.8 |
| | 36" | | | 101.5 |
| | 42" | | | 94.5 |
| | 48" | | | 88.3 |
| | 54" | | | 82.9 |
| 72" | 30" | | | 97.7 |
| | 36" | | | 92.1 |
| | 42" | | | 86.4 |
| | 48" | | | 81.1 |
| | 54" | | | 76.6 |
| 60" | 30" | 80" | 102" | 93.1 |
| | 36" | | | 86.5 |
| | 42" | | | 80.7 |
| | 48" | | | 75.6 |
| | 54" | | | 71.2 |
| 72" | 30" | | | 83.6 |
| | 36" | | | 78.2 |
| | 42" | | | 73.5 |
| | 48" | | | 69.3 |
| | 54" | | | 65.5 |
| 60" | 30" | 80" | 108" | 80.1 |
| | 36" | | | 74.6 |
| | 42" | | | 69.8 |
| | 48" | | | 65.5 |
| | 54" | | | 61.8 |
| 72" | 30" | | | 71.6 |
| | 36" | | | 67.2 |
| | 42" | | | 63.3 |
| | 48" | | | 59.8 |
| | 54" | | | 56.6 |
| 60" | 30" | 80" | 114" | 69.6 |
| | 36" | | | 64.9 |
| | 42" | | | 60.9 |
| | 48" | | | 57.3 |
| | 54" | | | 54.1 |
| 72" | 30" | | | 62.1 |
| | 36" | | | 58.4 |
| | 42" | | | 55.1 |
| | 48" | | | 52.1 |
| | 54" | | | 49.5 |
| 60" | 30" | 80" | 120" | 61.0 |
| | 36" | | | 57.1 |
| | 42" | | | 53.6 |
| | 48" | | | 50.5 |
| | 54" | | | 47.8 |
| 72" | 30" | | | 54.3 |
| | 36" | | | 51.2 |
| | 42" | | | 48.4 |
| | 48" | | | 45.9 |

| DOOR MULLION LOAD CAPACITY | | | | |
|---|---|---|---|---|
| NOMINAL DIMS. | | | | LOADS-PSF |
| DOOR WIDTH W2 | SIDELITE WIDTH W1 | DOOR HEIGHT A | FRAME SPAN L | EXT. (+) INT. (-) |
| 60" | 30" | 84" | 90" | 113.3 |
| | 36" | | | 106.3 |
| | 42" | | | 100.2 |
| | 48" | | | 94.7 |
| | 54" | | | 89.8 |
| 72" | 30" | | | 100.6 |
| | 36" | | | 95.0 |
| | 42" | | | 90.1 |
| | 48" | | | 85.6 |
| | 54" | | | 81.6 |
| 60" | 30" | 84" | 96" | 108.3 |
| | 36" | | | 101.5 |
| | 42" | | | 95.5 |
| | 48" | | | 90.2 |
| | 54" | | | 85.2 |
| 72" | 30" | | | 96.2 |
| | 36" | | | 90.8 |
| | 42" | | | 86.0 |
| | 48" | | | 81.7 |
| | 54" | | | 77.8 |
| 60" | 30" | 84" | 102" | 96.4 |
| | 36" | | | 89.2 |
| | 42" | | | 83.1 |
| | 48" | | | 77.7 |
| | 54" | | | 73.0 |
| 72" | 30" | | | 86.8 |
| | 36" | | | 80.9 |
| | 42" | | | 75.8 |
| | 48" | | | 71.4 |
| | 54" | | | 67.3 |
| 60" | 30" | 84" | 108" | 82.6 |
| | 36" | | | 76.7 |
| | 42" | | | 71.7 |
| | 48" | | | 67.2 |
| | 54" | | | 63.2 |
| 72" | 30" | | | 74.1 |
| | 36" | | | 69.4 |
| | 42" | | | 65.2 |
| | 48" | | | 61.5 |
| | 54" | | | 58.2 |
| 60" | 30" | 84" | 114" | 71.6 |
| | 36" | | | 66.7 |
| | 42" | | | 62.4 |
| | 48" | | | 58.7 |
| | 54" | | | 55.3 |
| 72" | 30" | | | 64.1 |
| | 36" | | | 60.1 |
| | 42" | | | 56.6 |
| | 48" | | | 53.5 |
| | 54" | | | 50.7 |
| 60" | 30" | 84" | 120" | 62.7 |
| | 36" | | | 58.5 |
| | 42" | | | 54.9 |
| | 48" | | | 51.6 |
| | 54" | | | 48.8 |
| 72" | 30" | | | 55.9 |
| | 36" | | | 52.6 |
| | 42" | | | 49.6 |
| | 48" | | | 47.0 |

| DOOR MULLION LOAD CAPACITY | | | | |
|---|---|---|---|---|
| NOMINAL DIMS. | | | | LOADS-PSF |
| DOOR WIDTH W2 | SIDELITE WIDTH W1 | DOOR HEIGHT A | FRAME SPAN L | EXT. (+) INT. (-) |
| 60" | 30" | 90" | 96" | 106.1 |
| | 36" | | | 99.6 |
| | 42" | | | 93.8 |
| | 48" | | | 88.7 |
| | 54" | | | 84.1 |
| 72" | 30" | | | 94.1 |
| | 36" | | | 89.0 |
| | 42" | | | 84.3 |
| | 48" | | | 80.2 |
| | 54" | | | 76.4 |
| 60" | 30" | 90" | 102" | 101.5 |
| | 36" | | | 93.6 |
| | 42" | | | 86.8 |
| | 48" | | | 81.0 |
| | 54" | | | 75.8 |
| 72" | 30" | | | 90.3 |
| | 36" | | | 85.3 |
| | 42" | | | 79.7 |
| | 48" | | | 74.7 |
| | 54" | | | 70.3 |
| 60" | 30" | 90" | 108" | 86.7 |
| | 36" | | | 80.2 |
| | 42" | | | 74.7 |
| | 48" | | | 69.8 |
| | 54" | | | 65.5 |
| 72" | 30" | | | 78.1 |
| | 36" | | | 72.8 |
| | 42" | | | 68.2 |
| | 48" | | | 64.1 |
| | 54" | | | 60.5 |
| 60" | 30" | 90" | 114" | 74.9 |
| | 36" | | | 69.5 |
| | 42" | | | 64.9 |
| | 48" | | | 60.8 |
| | 54" | | | 57.2 |
| 72" | 30" | | | 67.3 |
| | 36" | | | 62.9 |
| | 42" | | | 59.0 |
| | 48" | | | 55.7 |
| | 54" | | | 52.6 |
| 60" | 30" | 90" | 120" | 65.4 |
| | 36" | | | 60.8 |
| | 42" | | | 56.9 |
| | 48" | | | 53.4 |
| | 54" | | | 50.3 |
| 72" | 30" | | | 58.5 |
| | 36" | | | 54.9 |
| | 42" | | | 51.6 |
| | 48" | | | 48.8 |

| DOOR MULLION LOAD CAPACITY | | | | |
|---|---|---|---|---|
| NOMINAL DIMS. | | | | LOADS-PSF |
| DOOR WIDTH W2 | SIDELITE WIDTH W1 | DOOR HEIGHT A | FRAME SPAN L | EXT. (+) INT. (-) |
| 60" | 30" | 96" | 102" | 99.7 |
| | 36" | | | 93.6 |
| | 42" | | | 88.2 |
| | 48" | | | 83.4 |
| | 54" | | | 78.9 |
| 72" | 30" | | | 88.5 |
| | 36" | | | 83.6 |
| | 42" | | | 79.3 |
| | 48" | | | 75.4 |
| | 54" | | | 71.8 |
| 60" | 30" | 96" | 108" | 91.1 |
| | 36" | | | 84.0 |
| | 42" | | | 77.8 |
| | 48" | | | 72.5 |
| | 54" | | | 67.9 |
| 72" | 30" | | | 82.4 |
| | 36" | | | 76.5 |
| | 42" | | | 71.4 |
| | 48" | | | 66.9 |
| | 54" | | | 63.0 |
| 60" | 30" | 96" | 114" | 78.4 |
| | 36" | | | 72.5 |
| | 42" | | | 67.4 |
| | 48" | | | 63.0 |
| | 54" | | | 59.1 |
| 72" | 30" | | | 70.7 |
| | 36" | | | 65.9 |
| | 42" | | | 61.7 |
| | 48" | | | 58.0 |
| | 54" | | | 54.6 |
| 60" | 30" | 96" | 120" | 68.2 |
| | 36" | | | 63.3 |
| | 42" | | | 59.0 |
| | 48" | | | 55.2 |
| | 54" | | | 51.9 |
| 72" | 30" | | | 61.3 |
| | 36" | | | 57.3 |
| | 42" | | | 53.7 |
| | 48" | | | 50.6 |

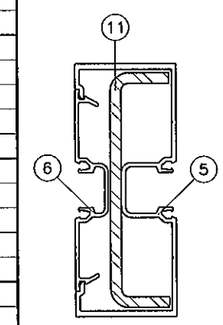


DOOR MULLION W/ REINFORCING

| | Ix IN^4 | Sx IN^3 |
|---|---|---|
| ALUMINUM | 2.9100 | 1.2932 |
| STEEL | 2.2599 | 1.0635 |
| TOTAL Ix ALUM + Ix STL X 2.9 | 9.4637 | |

| ANCHOR TYPES | TOTAL NO. OF ANCHORS AT DOOR MULLION HEAD |
|---|---|
| A | 8 |
| B | 5 |
| C | 4 |

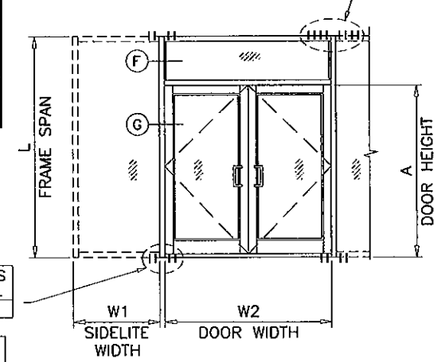


| ANCHOR TYPE | TOTAL NO. OF ANCHORS AT DOOR MULLION SILL |
|---|---|
| B | 4 |

PRODUCT REVISED
as complying with the Florida
Building Code
Acceptance No 11-1208.02
Expiration Date MARCH 24, 2016
By Manuel Sanz
Miami Dade Product Control

DOOR MULLION CAPACITY CHART

Engr: JAVAD AHMAD
CIVIL
FLA. PE # 70592
C.A.N. 3338

JAN 30 2012


AL-FAROOQ CORPORATION
ENGINEERS & PRODUCT DEVELOPMENT
1235 S.W. 87 AVE
MIAMI, FLORIDA 33174
TEL. (305) 264-8100 FAX. (305) 262-6978


STORE\W05-11SM

SERIES SM-45 ALUMINUM STOREFRONT SYSTEM (N.J.)


SMI Aluminum Systems, LLC.
11305 N.W. 128 STREET
MEDLEY, FL. 33178
TEL. (305) 888-6288 FAX. (305) 888-6289


| revisions: | | | |
|---|---|---|---|
| no | date | by | description |
| B | 01.25.12 | | GENERAL REVISION |

date: 03-01-05
scale: -
dr. by: HAMID
chk. by:

drawing no. W05-11

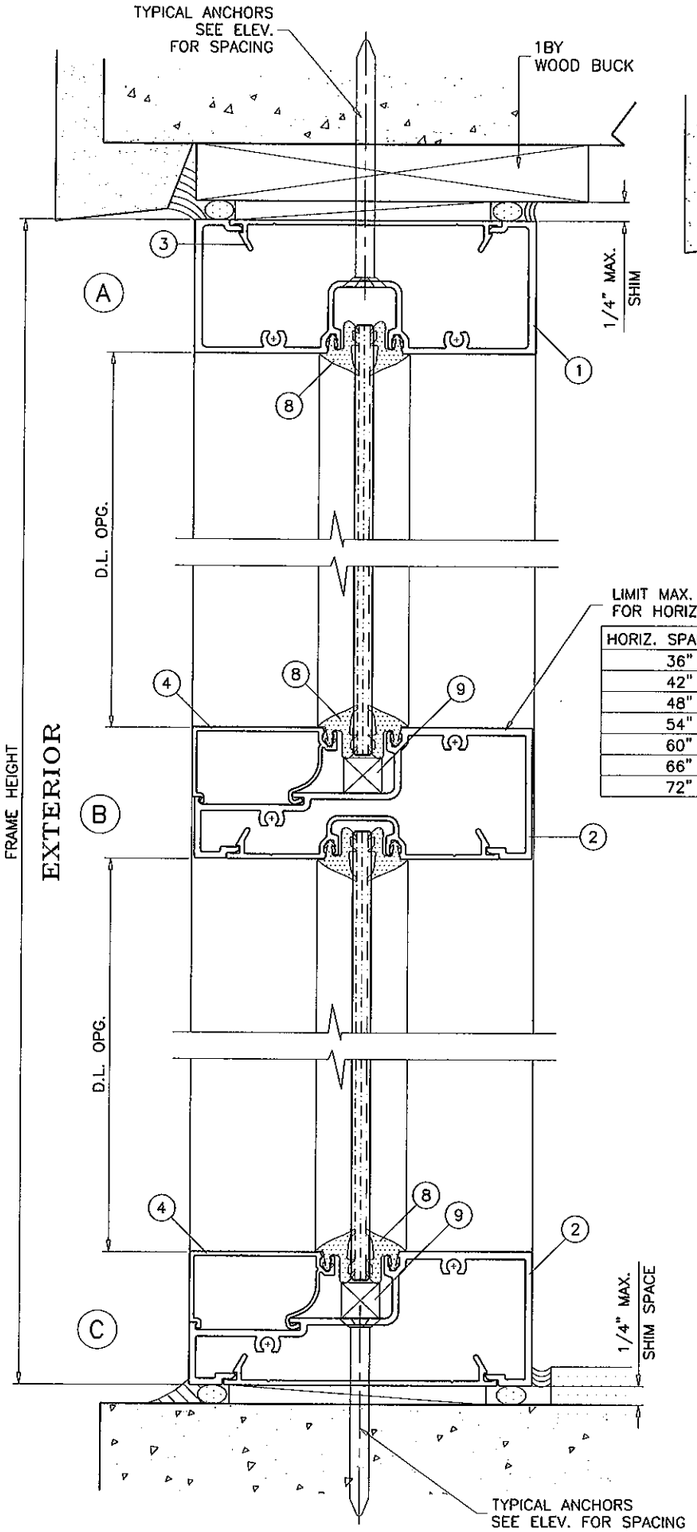


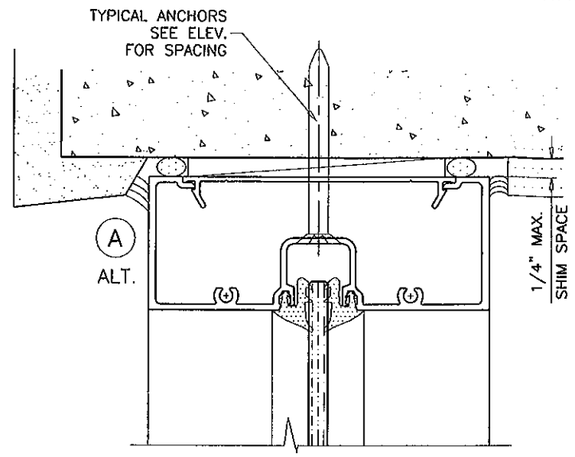


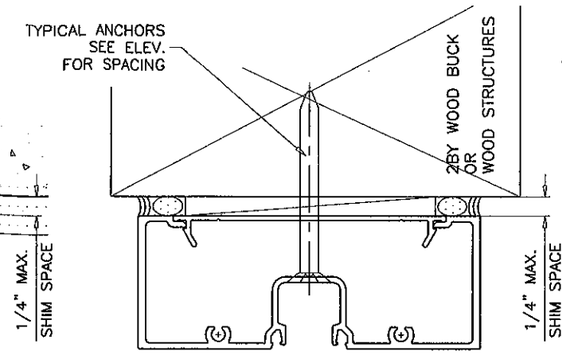


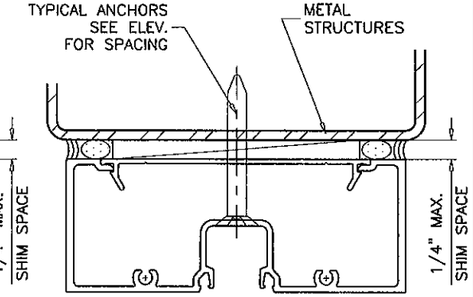


LIMIT MAX. DESIGN LOADS FOR HORIZONTAL AS FOLLOWS

| HORIZ. SPAN MAX. | LOAD CAPACITY - PSF |
|---|---|
| 36" | 120.0 |
| 42" | 113.0 |
| 48" | 99.0 |
| 54" | 90.0 |
| 60" | 81.0 |
| 66" | 80.0 |
| 72" | 67.3 |

WOOD BUCKS AND METAL STRUCTURES NOT BY SMI ALUM SYS. MUST SUPPORT LOADS IMPOSED BY GLAZING SYSTEM AND TRANSFER THEM TO THE BUILDING STRUCTURE.

TYPICAL ANCHORS: SEE ELEV. FOR SPACING

TYPE 'A'
1/4" DIA. TAPCON BY 'ITW' (Fu=120 KSI, Fy=92 KSI)
1/4" DIA ULTRACON BY 'ELCO' (Fu=177 KSI, Fy=155 KSI)
INTO 2BY WOOD BUCKS OR WOOD STRUCTURES
WITH 1-3/8" MIN. PENETRATION INTO WOOD
THRU 1BY WOOD BUCKS INTO CONC. OR MASONRY
WITH 1-1/4" MIN. EMBED INTO CONC. OR MASONRY
ANCHOR EDGE DISTANCES
INTO CONCRETE = 2-1/2" MIN.
INTO WOOD STRUCTURE = 1" MIN.

TYPE 'B'
1/4" DIA. TAPCON BY 'ITW' (Fu=120 KSI, Fy=92 KSI)
1/4" DIA ULTRACON BY 'ELCO' (Fu=177 KSI, Fy=155 KSI)
DIRECTLY INTO CONCRETE OR MASONRY
WITH 1-1/4" MIN. EMBED INTO CONC. OR MASONRY
ANCHOR EDGE DISTANCES
INTO CONC. OR MASONRY = 2-1/2" MIN.

TYPE 'C'
#14 SMS OR SELF DRILLING SCREWS ST/ST (GRADE 2 CRS)
INTO METAL STRUCTURES
STEEL : 1/8" THK. MIN. (Fy = 36 KSI MIN.)
ALUMINUM : 1/8" THK. MIN. (6063-T5 MIN.)
(STEEL IN CONTACT WITH ALUMINUM TO BE PLATED OR PAINTED)
ANCHOR EDGE DISTANCES
INTO METAL STRUCTURE = 3/4" MIN.

CONCRETE AT HEAD, SILL OR JAMBS f'c = 3000 PSI MIN.
C-90 HOLLOW/FILLED BLOCK AT JAMBS f'm = 2000 PSI MIN.

Engr: JAVAD AHMAD
CIVIL
FLA. PE # 70592
C.A.N. 3538
JAN 30 2012

PRODUCT REVISED
complying with the Florida
Building Code
Acceptance No 11-1208.02
Expiration Date MARCH 29, 2016
By Manuel Perez
Miami-Dade Product Control


AL-FAROOQ CORPORATION
ENGINEERS & PRODUCT DEVELOPMENT
1235 S.W. 87 AVE
MIAMI, FLORIDA 33174
TEL. (305) 264-8100 FAX. (305) 262-6978


STORE\W05-11SM

SERIES SM-45 ALUMINUM STOREFRONT SYSTEM (N.I.)


SMI Aluminum Systems, LLC.
11305 N.W. 128 STREET
MEDLEY, FL. 33178
TEL. (305) 888-6288 FAX. (305) 888-6289


revisions:

| no | date | by | description |
|---|---|---|---|
| A | 10.08.10 | | GENERAL REVISION |
| B | 01.25.12 | | NO CHANGE THIS SHEET |

date: 03-01-05
scale: 1/2" = 1"
dr. by: HAMID
chk. by:

drawing no.
W05-11

sheet 8 of 11

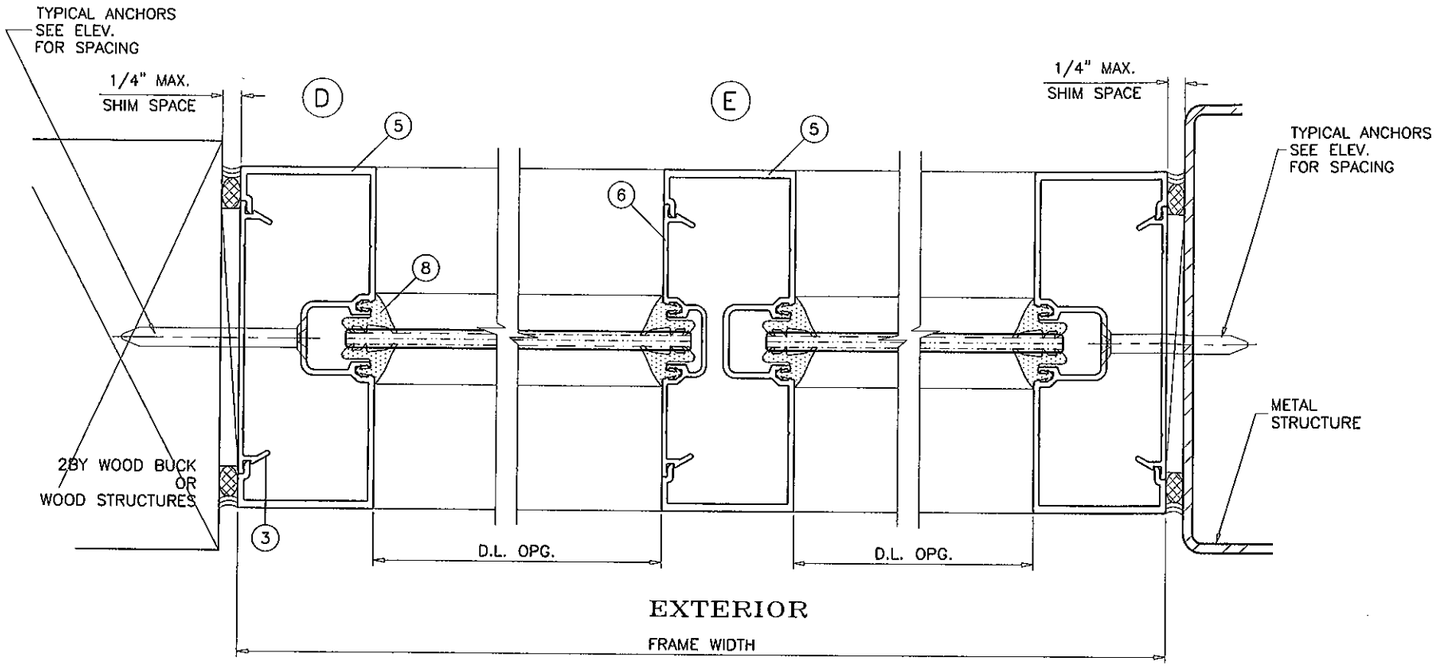


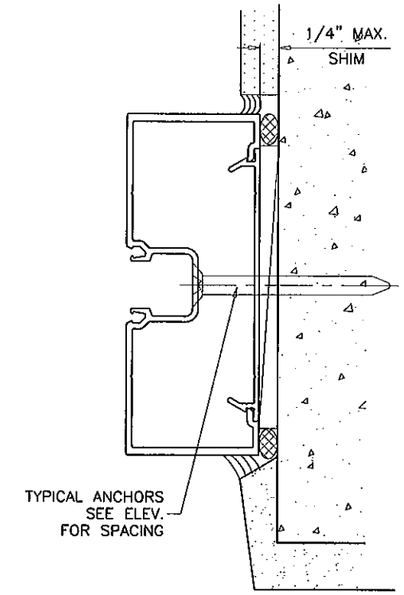


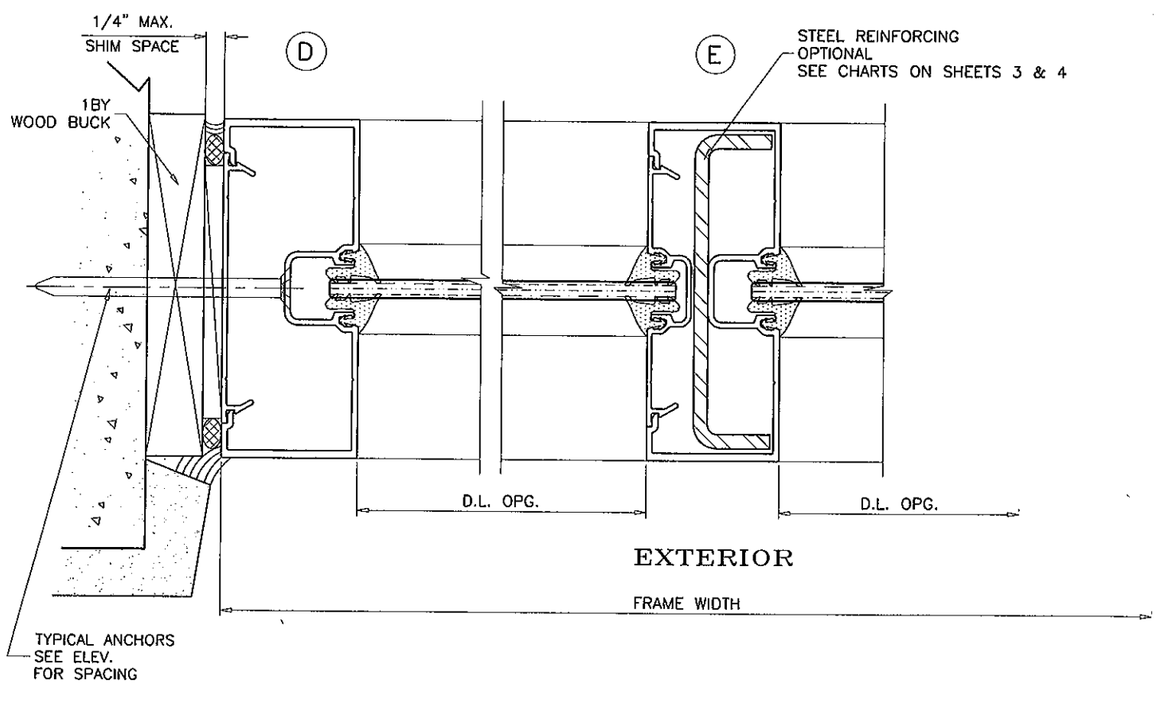


Engr: JAVAD AHMAD
CIVIL
FLA. PE # 70592
C.A.N. 3538
JAN 30 2012

PRODUCT REVISED
as complying with the Florida
Building Code
Acceptance No 11-1208.02
Expiration Date ~~MARCH 29~~, 2016
By Manuel Perez
Miami-Dade Product Control


AL-FAROOQ CORPORATION
ENGINEERS & PRODUCT DEVELOPMENT
1235 S.W. 87 AVE
MIAMI, FLORIDA 33174
TEL. (305) 264-8100 FAX. (305) 262-6978


STORE\W05-11SM

SERIES SM-45 ALUMINUM STOREFRONT SYSTEM (N.I.)


SMI Aluminum Systems, LLC.
11305 N.W. 128 STREET
MEDLEY, FL. 33178
TEL. (305) 888-6288 FAX. (305) 888-6289


revisions:

| no | date | by | description |
|---|---|---|---|
| A | 10.08.10 | | GENERAL REVISION |
| B | 01.25.12 | | NO CHANGE THIS SHEET |

date: 03-01-05
scale: 1/2" = 1"
dr. by: HAMID
chk. by:

drawing no.
W05-11

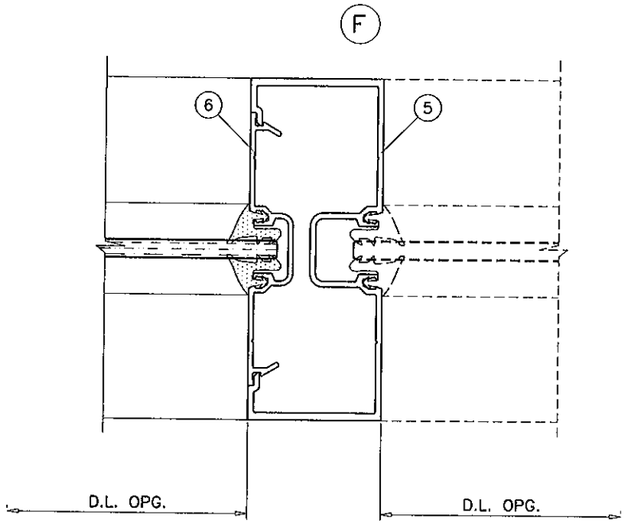


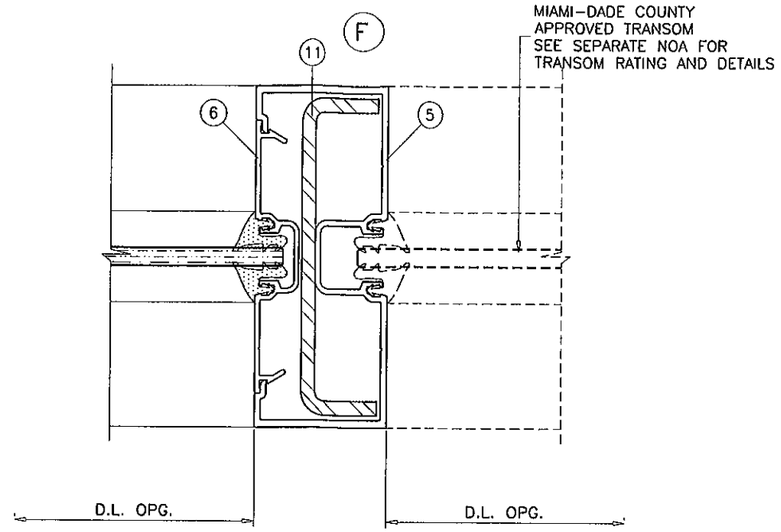


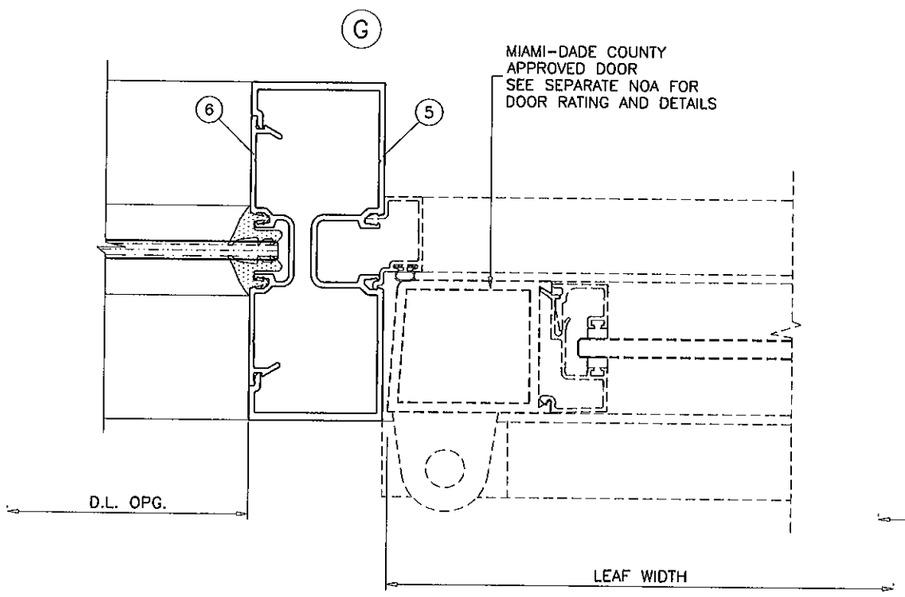


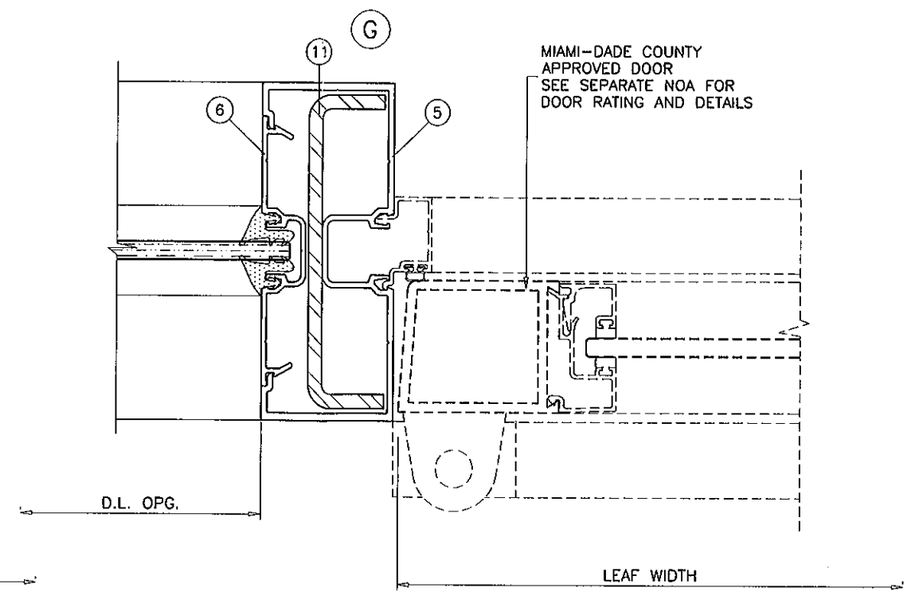


Engr: JAVAD, AHMAD
CIVIL
FLA. PE # 70592
C.A.N.: 3538
JAN 10 2012

PRODUCT REVISED
complying with the Florida
Building Code
Acceptance No 11-1208.02
Expiration Date March 24, 2016
By Manuel Perez
Miami-Dade Product Control


AL-FAROOQ CORPORATION
ENGINEERS & PRODUCT DEVELOPMENT
1235 S.W. 87 AVE
MIAMI, FLORIDA 33174
TEL. (305) 264-8100 FAX. (305) 262-6978


STORE\W05-11SM

SERIES SM-45 ALUMINUM STOREFRONT SYSTEM (N.I.)


SMI Aluminum Systems, LLC.
11305 N.W. 128 STREET
MEDLEY, FL. 33178
TEL. (305) 888-6288 FAX. (305) 888-6289


revisions:

| no | date | by | description |
|---|---|---|---|
| B | 01.25.12 | | GENERAL REVISION |

date: 03-01-05
scale: 1/2" = 1"
dr. by: HAMID
chk. by:

drawing no.
W05-11

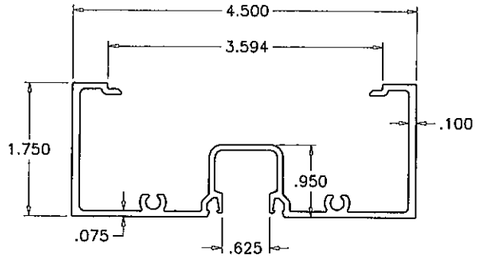


1 FRAME HEAD

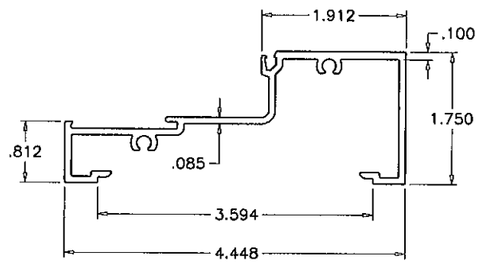


2 FRAME HORIZONTAL/SILL

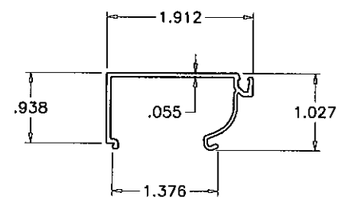


4 GLAZING STOP

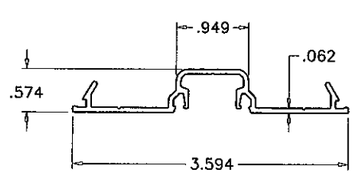


6 POCKET FILLER

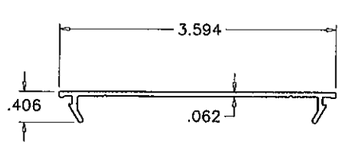


3 SNAP IN COVER

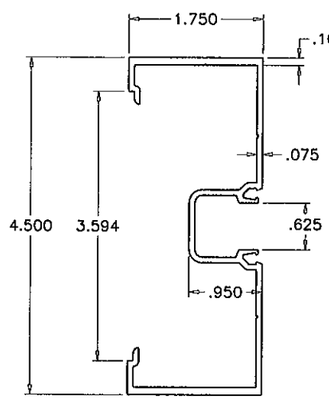


5 FRAME JAMB/MULLION

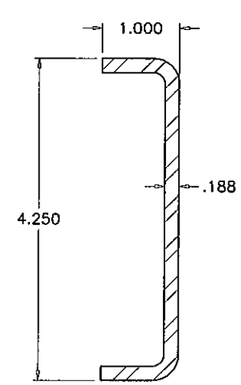


11 STEEL REINFORCING
36 KSI MIN.

| ITEM NO. | PART NUMBER | QUANTITY | DESCRIPTION | MATERIAL | MANF./SUPPLIER/REMARKS |
|---|---|---|---|---|---|
| 1 | SMI-113 | AS REQD. | FRAME HEAD | 6063-T6 | - |
| 2 | SMI-114 | AS REQD. | FRAME HORIZONTAL/SILL | 6063-T6 | - |
| 3 | SMI-118 | AS REQD. | SNAP IN COVER, 2-1/2" LONG | 6063-T5 | - |
| 4 | SMI-116 | AS REQD. | GLAZING STOP | 6063-T5 | - |
| 5 | SMI-110 | AS REQD. | FRAME JAMB/MULLION | 6063-T6 | - |
| 6 | SMI-117 | AS REQD. | POCKET FILLER | 6063-T6 | - |
| 7 | - | - | - | - | - |
| 8 | SMI-G04 | AS REQD. | GLAZING GASKET (DUROMETER 70±5) | EPDM | FRANK LOWE RUBBER |
| 9 | SMI-45 | AS REQD. | SETTING BLOCK AT 1/4" POINTS (DUROMETER 85±5) | EPDM | 1/2" X 1/2" X 4" LONG |
| 10 | #12 X 1-1/2" | 2/ CORNER | ASSEMBLY SCREWS | STEEL | HEX H SELF DRILLING |
| 11 | - | OPTIONAL | REINFORCING CHANNEL | STEEL | 4-1/4" X 1" X 3/16" THK. |

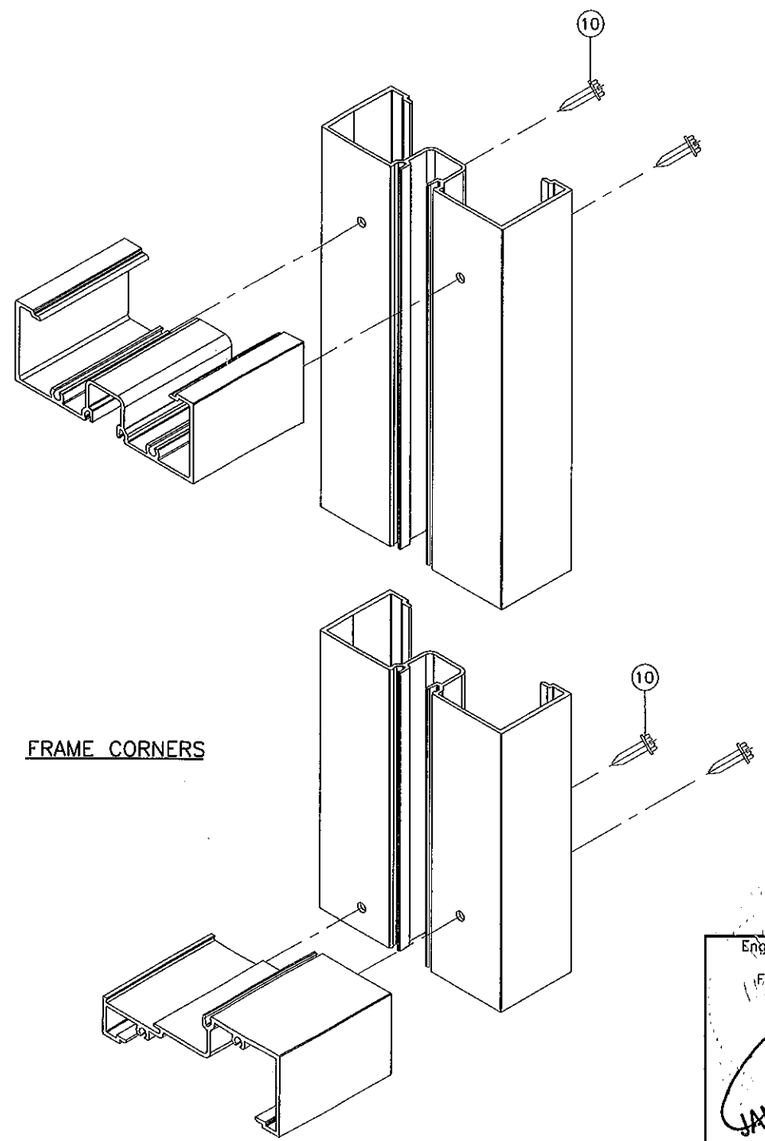


FRAME CORNERS

Engr: JAVAD AHMAD
CIVIL
FLA. PE # 70592
C.A.N. 3538

JAN 30 2012

PRODUCT REVISED
is complying with the Florida
Building Code
Acceptance No 11-1208.02
Expiration Date March 24, 2016
By Manuel Sera
Miami-Dade Product Control


AL-FAROOQ CORPORATION
ENGINEERS & PRODUCT DEVELOPMENT
1235 S.W. 87 AVE
MIAMI, FLORIDA 33174
TEL. (305) 264-8100 FAX. (305) 262-6978


STORE\W05-11SM

SERIES SM-45 ALUMINUM STOREFRONT SYSTEM (N.L.)


SMI Aluminum Systems, LLC.
11305 N.W. 128 STREET
MEDLEY, FL. 33178
TEL. (305) 888-6288 FAX. (305) 888-6289


revisions:

| no | date | by | description |
|---|---|---|---|
| A | 10.08.10 | | GENERAL REVISION |
| B | 01.25.12 | | GENERAL REVISION |

date: 03-01-05
scale: 1/2" = 1"
dr. by: HAMID
chk. by:

drawing no.
W05-11

sheet 11 of 11