MIAMI-DADE COUNTY
DEPARTMENT OF PERMITTING, ENVIRONMENT, AND REGULATORY AFFAIRS (PERA)
BOARD AND CODE ADMINISTRATION DIVISION

MIAMI-DADE COUNTY
PRODUCT CONTROL SECTION
11805 SW 26 Street, Room 208
Miami, Florida 33175-2474
T (786) 315-2590 F (786) 315-2599
www.miamidade.gov/pera/

NOTICE OF ACCEPTANCE (NOA)

Trulite Window & Door Solutions, LLC
8130 NW 74th Avenue
Medley, FL 33166

SCOPE:

This NOA is being issued under the applicable rules and regulations governing the use of construction materials. The documentation submitted has been reviewed and accepted by Miami-Dade County PERA -Product Control Section to be used in Miami Dade County and other areas where allowed by the Authority Having Jurisdiction (AHJ).

This NOA shall not be valid after the expiration date stated below. The Miami-Dade County Product Control Section (In Miami Dade County) and/or the AHJ (in areas other than Miami Dade County) reserve the right to have this product or material tested for quality assurance purposes. If this product or material fails to perform in the accepted manner, the manufacturer will incur the expense of such testing and the AHJ may immediately revoke, modify, or suspend the use of such product or material within their jurisdiction. PERA reserves the right to revoke this acceptance, if it is determined by Miami-Dade County Product Control Section that this product or material fails to meet the requirements of the applicable building code.

This product is approved as described herein, and has been designed to comply with the Florida Building Code, including the High Velocity Hurricane Zone.

DESCRIPTION: Series "1800"Aluminum French Doors w/ wo sidelites-L.M.I.

APPROVAL DOCUMENT: Drawing No. **W01-64**, titled "Series 1800 Alum French Doo w/ sidelite (L.M.I.)", sheets 1 through 15 of 15, dated 09-17-01 last revised on DEC 08, 2011, prepared by AL-Farooq Corporation, signed and sealed by Javad Ahmad, P.E., bearing the Miami-Dade County Product Control Revision stamp with the Notice of Acceptance number and expiration date by the Miami-Dade County Product Control Section.

MISSILE IMPACT RATING: Large Missile Impact Resistant

Limitation:

1. SHW is integral part of **single** door application, door not to exceed 39-1/2W X 84"H and Max DP=+/-65 psf.

LABELING: Each unit shall bear a permanent label with the manufacturer's name or logo, city, state and series and following statement: "Miami-Dade County Product Control Approved", unless otherwise noted herein.

RENEWAL of this NOA shall be considered after a renewal application has been filed and there has been no change in the applicable building code negatively affecting the performance of this product.

TERMINATION of this NOA will occur after the expiration date or if there has been a revision or change in the materials, use, and/or manufacture of the product or process. Misuse of this NOA as an endorsement of any product, for sales, advertising or any other purposes shall automatically terminate this NOA. Failure to comply with any section of this NOA shall be cause for termination and removal of NOA.

ADVERTISEMENT: The NOA number preceded by the words Miami-Dade County, Florida, and followed by the expiration date may be displayed in advertising literature. If any portion of the NOA is displayed, then it shall be done in its entirety.

INSPECTION: A copy of this entire NOA shall be provided to the user by the manufacturer or its distributors and shall be available for inspection at the job site at the request of the Building Official.

This NOA **revises & renews NOA # 10-0930.07** (former Arch Windows, LLC dba AWP) and consists of this page 1 and evidence pages E-1, as well as approval document mentioned above.

The submitted documentation was reviewed by **Ishaq I. Chanda, P.E.**

MIAMI-DADE COUNTY APPROVED

1/25/12

NOTICE OF ACCEPTANCE: EVIDENCE SUBMITTED

A. DRAWINGS

1. Manufacturer's die drawings and sections (transferred from file # **10-0930.07**).
2. Drawing No. **W01-64**, titled "Series 1800 Alum French Doo w/ sidelite (L.M.I.)", sheets 1 through 15 of 15, dated 09-17-01 last revised on DEC 08, 2011, prepared by AL-Farooq Corporation, signed and sealed by Javad Ahmad, P.E.

B. TESTS (transferred from file # **10-0930.07/09-0316.05**)

1. Test reports on: 1) Air Infiltration Test, per FBC, TAS 202-94
   2) Uniform Static Air Pressure Test, Loading per FBC TAS 202-94
   3) Water Resistance Test, per FBC, TAS 202-94
   4) Large Missile Impact Test per FBC, TAS 201-94
   5) Cyclic Wind Pressure Loading per FBC, TAS 203-94
   6) Forced Entry Test, per FBC 2411 3.2.1, TAS 202-94

   Along with marked-up drawings and installation diagram of an OXO aluminum Outswing door, prepared by Fenestration Testing Lab., Test Report No. **FTL-5701**, dated 11/13/08, signed and sealed by Carlos S. Roinda, P. E.
2. Test reports on: 1) Air Infiltration Test, per FBC, TAS 202-94
   2) Uniform Static Air Pressure Test, Loading per FBC TAS 202-94
   3) Water Resistance Test, per FBC, TAS 202-94
   4) Large Missile Impact Test per FBC, TAS 201-94
   5) Cyclic Wind Pressure Loading per FBC, TAS 203-94
   6) Forced Entry Test, per FBC 2411 3.2.1, TAS 202-94

   Along with marked-up drawings and installation diagram of Single Outswing door w/ SHW, prepared by Fenestration Testing Lab., Test Report No. **FTL-5675**, dated 09/11/08, signed and sealed by Carlos S. Roinda, P. E.
3. Additional Test reports on: 1) Large Missile Impact Test per FBC, TAS 201-94
   2) Cyclic Wind Pressure Loading per FBC, TAS 203-94

   Along with marked-up drawings and installation diagram of an aluminum French Door w/3-point lock, prepared by Fenestration Testing Lab., Inc., Test Report No. **FTL-3389**, dated 6 /25/02, signed and sealed by Edmundo Largaespada, P.E. *(Submitted under previous NOA #**06-1229.03**)*
4. Test reports on: 1) Air Infiltration Test, per FBC, TAS 202-94
   2) Uniform Static Air Pressure Test, Loading per FBC TAS 202-94
   3) Water Resistance Test, per FBC, TAS 202-94
   4) Large Missile Impact Test per FBC, TAS 201-94
   5) Cyclic Wind Pressure Loading per FBC, TAS 203-94
   6) Forced Entry Test, per FBC 2411 3.2.1, TAS 202-94

   Along with marked-up drawings and installation diagram of double Outswing aluminum French Door, prepared by Fenestration Testing Laboratory, Inc., Test Report No. **FTL-2682**, dated 7/12/01, signed and sealed by Luis Figueredo, P.E. *(Submitted under previous NOA **#03-0805.07** Yale Ogron Mfg. Co.)*

C. CALCULATIONS

1. Statement letter of compliance to FBC 2010, prepared by Al Farooq Corporation, dated 11/15/11, signed and sealed by Javad Ahmad, P.E.
2. Anchor verification calculations and structural analysis, complying with FBC-2007, prepared by Al Farooq Corporation, dated 03/10/09 and last revised on Jan 05, 2011, signed and sealed by Javad Ahmad, P.E. (transferred from file # **10-0930.07**).
3. Glazing complies w/ ASTME-1300-02 & -04

Ishaq I. Chanda

Ishaq I. Chanda, P.E.
Product Control Examiner
NOA No 11-1209.02
Expiration Date: January 03, 2017
Approval Date: January 26, 2012

NOTICE OF ACCEPTANCE: EVIDENCE SUBMITTED

D. QUALITY ASSURANCE

1. Miami Dade Department of Permitting, Environment, and Regulatory Affairs (PERA).

MATERIAL CERTIFICATIONS

1. Notice of Acceptance No. **11-0325.05** issued to Solutia Inc. for "Saflex clear & color interlayer", expiring on 05/21/16.
2. Notice of Acceptance No. 07-1116.11 issued to Saf-Glas, L.L.C. for "SAF GLAS Polycarbonate Laminate", expiring on 12/16/2012.

E. STATEMENTS

1. Statement letter of compliance to FBC 2010, prepared by Al Farooq Corporation, dated 11/15/11, signed and sealed by Javad Ahmad, P.E.
2. Statement letter of conformance and letter of no financial interest, prepared by Al Farooq Corporation, dated 09/03/10, signed and sealed by Javad Ahmad, P.E.
3. Statement letter of compliance, part of the above referenced test reports.
4. Certificate of registration of name change from "Arch Windows, LLC" to Trulite Residential Windows, LLC" issued by State of Delaware on 07/27/11, signed by J.W. Bullock.
5. Certificate of registration of name change from "Trulite Residential Windows, LLC" to " Trulite Window & Door Solution, LLC" issued by State of Delaware on 17/10/11, signed by J.W. Bullock.
6. Florida Dept of State, listing dated 02/03/10 of Trulite Window & Door Solution, LLC (Foreign Limited Liability Co.), managed by Arch Intermediate Holding, LLC, Tamarac, Fl.
7. Sales agreement between AWP, LLC (seller) and Arch Aluminum & Glass Enterprise, a Delaware Corp (purchaser) dated Jan 14, 2010, signed by Leon J. Silverstein and Wm, Robert Wright, respectively. (transferred from file # **10-0930.07**).
8. Certificate of registration of Arch Windows, LLC (Delaware) in State of Florida dated 02/04/10, managed by Arch Intermediate Holding, LLC (transferred from file # **10-0930.07**).
9. Florida Dept of State, listing of Arch Window, LLC (Foreign Limited Liability Co.), managed by Arch Intermediate Holding, LLC, Tamarac, Fl.(transferred from file # **10-0930.07**).
10. Statement letter dated March 25, 2010, issued by Arch Windows, LLC that it has purchased all assets of AWP, LLC effectively Jan 29, 2010, signed by Leon Silverstein, President/CEO (Arch Windows, LLC)(transferred from file # **10-0930.07**).
11. Asset purchase agreement dated 11/01/06 among AWP, LLC (Buyer) and Yale Ogron Windows & Door Inc. (seller), signed by Leon J. Silverstein and Manny Valladares, respectively(transferred from file # ***03-0805.07***).

G. OTHER

1. This NOA **revises** & **renews** NOA # **10-0930.07**, expired on January 03, 2012.
2. Certificate of name changes and State of Florida listings.
3. Test proposal, dated 06-14-00, 09-20-01 and 11-06-07, approved by BCCO.

Ishaq I. Chanda

Ishaq I. Chanda, P.E.
Product Control Examiner
NOA No 11-1209.02
Expiration Date: January 03, 2017
Approval Date: January 26, 2012

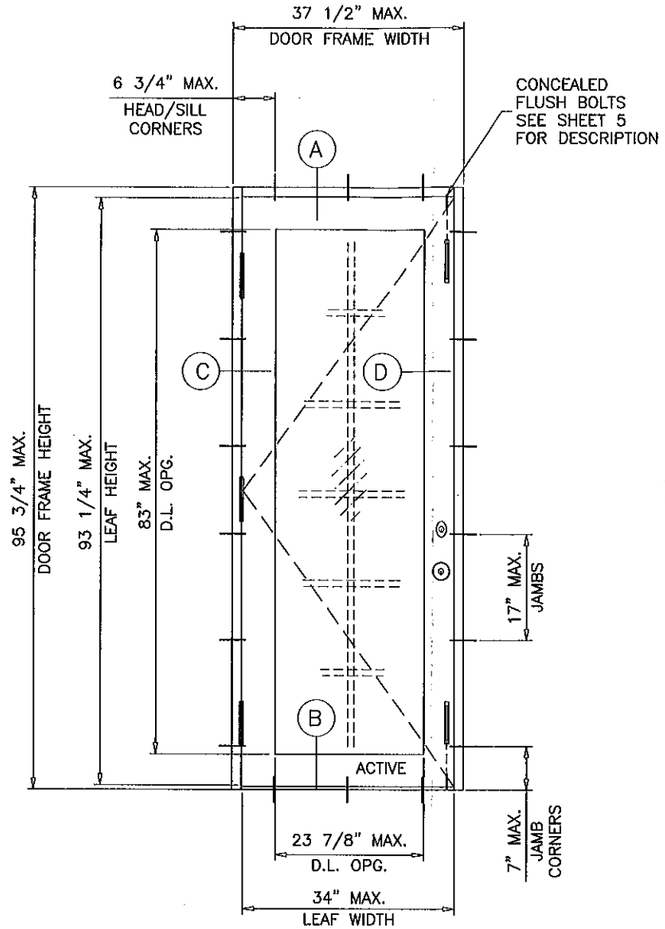

TYPICAL ELEVATION

(X)

SINGLE LEAF DOOR

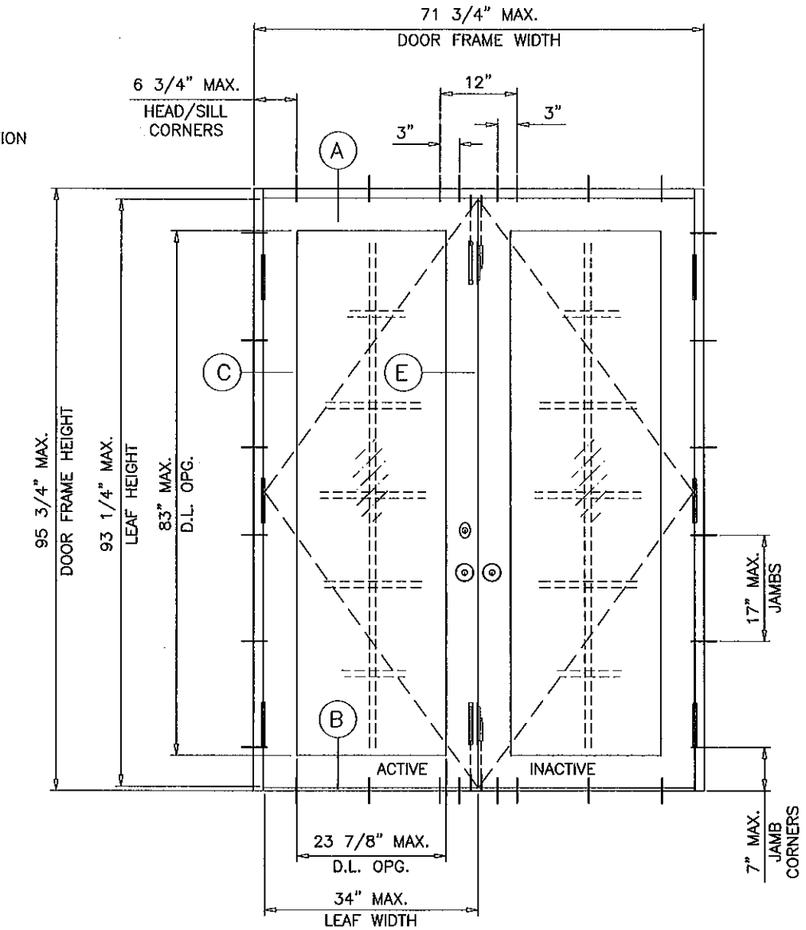

TYPICAL ELEVATION

(XX)

DUAL LEAF DOOR

SERIES 1800 ALUM. FRENCH DOOR W/ SIDELITES

APPROVAL APPLIES TO SINGLE (X) AND DOUBLE (XX) LEAF DOORS WITH OR WITHOUT SIDELITES.
SIDE LITES CAN BE ON ONE OR BOTH SIDES OF DOOR.
SEE SHEET 4 FOR DESIGN LOAD CAPACITIES.

THIS PRODUCT HAS BEEN DESIGNED AND TESTED TO COMPLY WITH THE REQUIREMENTS OF THE CURRENT FLORIDA BUILDING CODE INCLUDING HIGH VELOCITY HURRICANE ZONE (HVHZ).

WOOD BUCKS BY OTHERS, MUST BE ANCHORED PROPERLY TO TRANSFER LOADS TO THE STRUCTURE.

ANCHORS SHALL BE AS LISTED, SPACED AS SHOWN ON DETAILS, ANCHORS EMBEDMENT TO BASE MATERIAL SHALL BE BEYOND WALL DRESSING OR STUCCO.

ANCHORING OR LOADING CONDITIONS NOT SHOWN IN THESE DETAILS ARE NOT PART OF THIS APPROVAL.

A LOAD DURATION INCREASE IS USED IN DESIGN OF ANCHORS INTO WOOD ONLY.

MATERIALS INCLUDING BUT NOT LIMITED TO STEEL/METAL SCREWS, THAT COME INTO CONTACT WITH OTHER DISSIMILAR MATERIALS SHALL MEET THE REQUIREMENTS OF CURRENT FLORIDA BLDG. CODE SECTION 2003.8.4.

DOOR OPTIONS

GLASS D.L.O. DIMS.

D.L.O. HEIGHT (DOOR & SIDELITE) = FRAME HEIGHT – 13"
D.L.O. WIDTH (X DOORS & O PANELS) = FRAME WIDTH – 13.625"
D.L.O. WIDTH (XX DOORS) = (FRAME WIDTH – 24")/2

DOORS/SIDELITES ARE RATED FOR LARGE AND SMALL MISSILE IMPACT. SHUTTERS ARE NOT REQUIRED.

PRODUCT REVISED
as complying with the Florida Building Code
Acceptance No. 11-1209.02
Expiration Date 01/03/2017
By Ishaq I. Chanda
Miami Dade Product Control

Engr: JAVAD AHMAD
CIVIL
FLA. PE # 70592
C.A.N. 3538
DEC 08 2011

AL-FAROOQ CORPORATION
ENGINEERS & PRODUCT DEVELOPMENT
1235 S.W. 87 AVE
MIAMI, FLORIDA 33174
TEL. (305) 264-8100 FAX. (305) 262-6978

COMP-ANL\W01-64AWP

SERIES 1800 ALUM FRENCH DOOR W/ SIDELITES (L.M.I.)

TRULITE WINDOW & DOOR SOLUTIONS, LLC
8130 N.W. 74TH AVE.
MEDLEY, FL. 33166
TEL. (305) 887-2646 FAX (305) 883-1309

revisions:

no	date	by	description
D	01.29.07		REV. PER BCCO COMMENTS
E	02.03.09		GENERAL REVISION
F	09.02.10		MANUF. NAME REVISED
G	11.22.10		REV. PER BCCO COMMENTS
H	08.15.11		UPDATED FOR 2010 FBC

date: 09-17-01
scale: 1/2"=1'-0"
dr. by: HAMID
chk. by:

drawing no.
W01-64

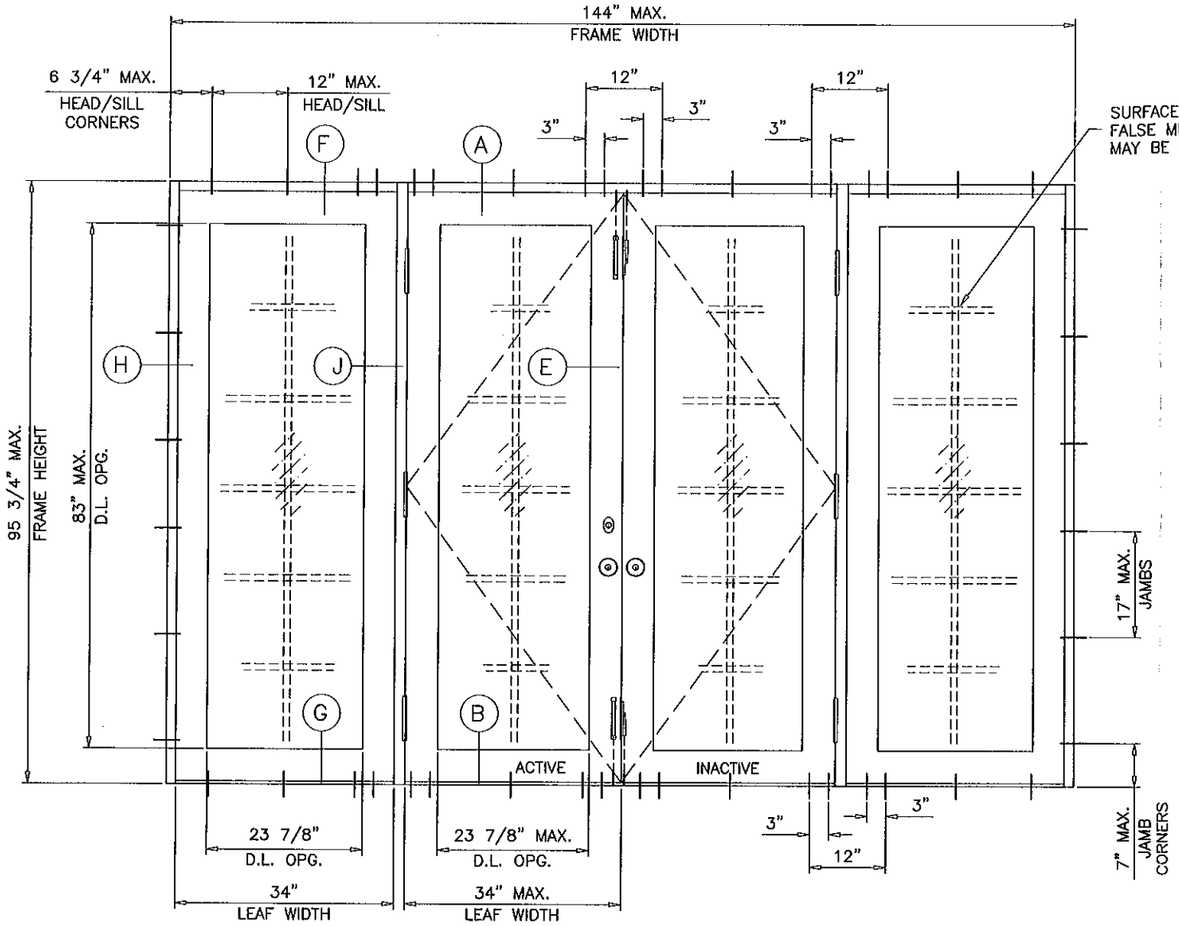

TYPICAL ELEVATION

(OXXO)

WITH PANEL SIDELITES

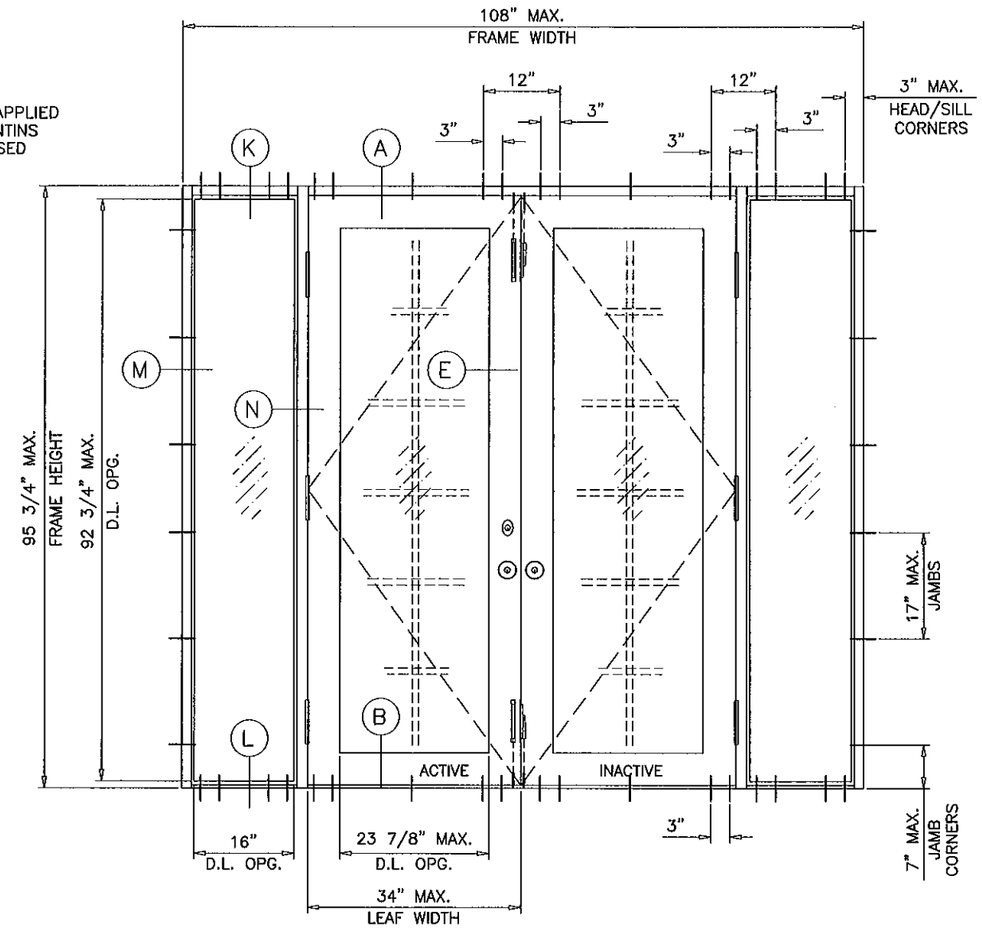

TYPICAL ELEVATION

(OXXO)

WITH DIRECT SET SIDELITES

SIDELITE OPTIONS

PRODUCT REVISED
as complying with the Florida
Building Code
Acceptance No. 11-1209.02
Expiration Date 01/03/17
By Ishaq I. Chanda
Miami Dade Product Control

Engr: JAVAD AHMAD
CIVIL
FLA. PE # 70592
C.A.N. 3538
DEC 08 2011

AL-FAROOQ CORPORATION
ENGINEERS & PRODUCT DEVELOPMENT
1235 S.W. 87 AVE
MIAMI, FLORIDA 33174
TEL. (305) 264-8100 FAX. (305) 262-6978
COMP-ANL\W01-64AWP

SERIES 1800 ALUM FRENCH DOOR W/ SIDELITES (L.M.I.)

TRULITE WINDOW & DOOR SOLUTIONS, LLC
8130 N.W. 74TH AVE.
MEDLEY, FL. 33166
TEL. (305) 887-2646 FAX (305) 883-1309

revisions:

no	date	by	description
D	01.29.07		REV. PER BCCO COMMENTS
E	02.03.09		GENERAL REVISION
F	09.02.10		MANUF. NAME REVISED
G	11.22.10		REV. PER BCCO COMMENTS
H	08.15.11		UPDATED FOR 2010 FBC

date: 09-17-01
scale: 1/2"=1'-0"
dr. by: HAMID
chk. by:

drawing no.
W01-64

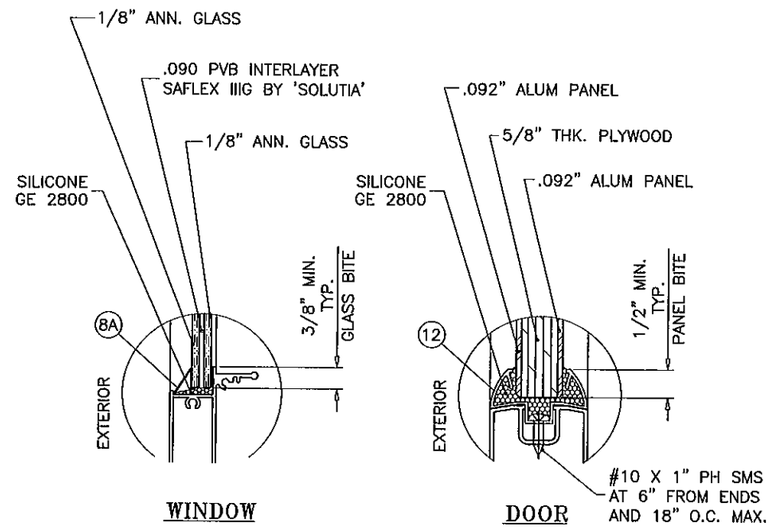

GLAZING DETAILS

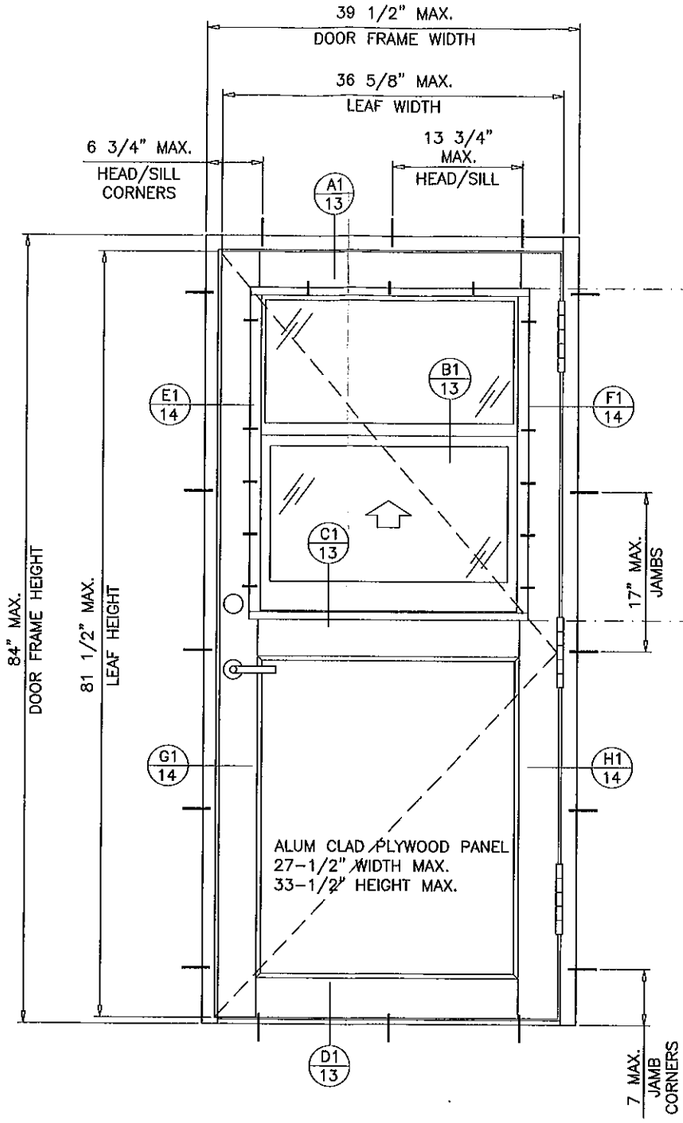

TYPICAL ELEVATION

(X)

FOR DESIGN LOAD CAPACITY SEE SHEET 4

SINGLE LEAF DOOR WITH SERIES 2500 SINGLE HUNG WDW. INSERT

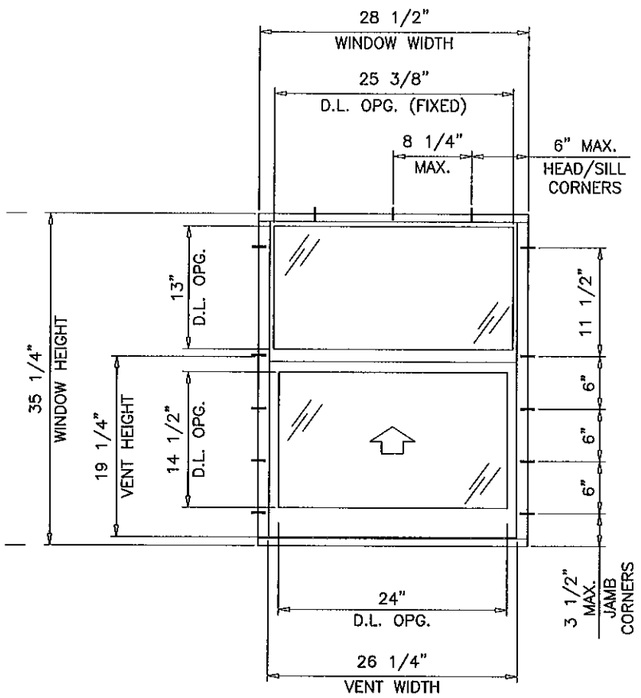

NOTE:
SINGLE HUNG WINDOW IS INTEGRAL PART OF THIS DOOR.

WINDOW INSERT OPTION

PRODUCT REVISED
as complying with the Florida
Building Code
Acceptance No 11-1209.02
Expiration Date 1/3/17
By Ishas L. Chan
Miami Dade Product Control

Engr: JAVAD AHMAD
CIVIL
FLA. PE # 70592
C.A.N. 3538
DEC 08 2011

AL-FAROOQ CORPORATION
ENGINEERS & PRODUCT DEVELOPMENT
1235 S.W. 87 AVE
MIAMI, FLORIDA 33174
TEL (305) 264-8100 FAX. (305) 262-6978

COMP-ANL\W01-64AWP

SERIES 1800 ALUM FRENCH DOOR W/ SIDELITES (L.M.I.)

TRULITE WINDOW & DOOR SOLUTIONS, LLC
8130 N.W. 74TH AVE.
MEDLEY, FL. 33166
TEL. (305) 887-2646 FAX (305) 883-1309

(revisions:

no	date	by	description
D	01.29.07		NO CHANGE THIS SHEET
E	02.03.09		GENERAL REVISION
F	09.02.10		MANUF. NAME REVISED
G	11.22.10		REV. PER BCCO COMMENTS
H	08.15.11		UPDATED FOR 2010 FBC

date: 09-17-01
scale: 3/4"=1'-0"
dr. by: HAMID
chk. by:

drawing no.
W01-64

SINGLE LEAF (X) DOORS WITHOUT SIDELITES			
DESIGN LOAD CAPACITY – PSF			
DOOR FRAME WIDTH (INCHES)	DOOR FRAME HEIGHT (INCHES)	GLASS TYPES 'A', 'B' OR 'D'	
		EXT.(+)	INT.(–)
31 1/2	79 3/4	65.0	65.0
37 1/2		65.0	65.0
31 1/2	83 3/4	65.0	65.0
37 1/2		65.0	65.0
31 1/2	95 3/4	65.0	65.0
37 1/2		65.0	65.0

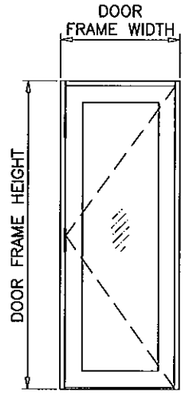

(X)

DOUBLE LEAF (XX) DOORS WITHOUT SIDELITES			
DESIGN LOAD CAPACITY – PSF			
DOOR FRAME WIDTH (INCHES)	DOOR FRAME HEIGHT (INCHES)	GLASS TYPES 'A', 'B' OR 'D'	
		EXT.(+)	INT.(–)
60	79 3/4	65.0	65.0
71 3/4		65.0	65.0
60	83 3/4	65.0	65.0
71 3/4		65.0	65.0
60	95 3/4	65.0	65.0
71 3/4		65.0	65.0

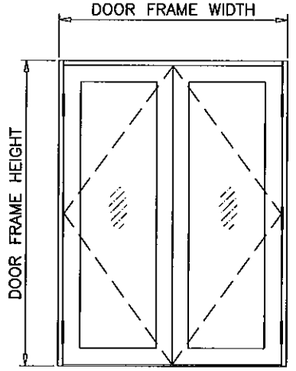

(XX)

SINGLE LEAF (X) DOORS WITH S.H. INSERT			
DESIGN LOAD CAPACITY – PSF			
DOOR FRAME WIDTH (INCHES)	DOOR FRAME HEIGHT (INCHES)	5/8" PLYWOOD .092" ALUM PANEL	
		EXT.(+)	INT.(–)
31 1/2	83 3/4	65.0	65.0
39 1/2		65.0	65.0

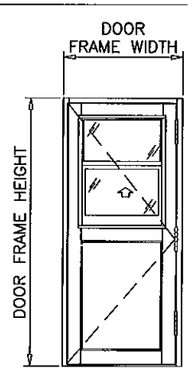

STATIONARY PANEL (O) OR DOORS WITH SIDELITES					
DESIGN LOAD CAPACITY – PSF					
DOOR FRAME HEIGHT (INCHES)	DOOR FRAME WIDTH (INCHES)	PANEL SIDELITE WIDTH (INCHES)	DIRECT SET SIDELITE WIDTH (INCHES)	GLASS TYPES 'A', 'B' OR 'D'	
				EXT. (+)	INT. (–)
79 3/4	31 1/2 (X) 60 (XX)	30	18	65.0	65.0
		36	18	65.0	65.0
		42	18	65.0	65.0
		48	18	65.0	65.0
		54	18	65.0	65.0
	37 1/2 (X) 71 3/4 (XX)	30	18	65.0	65.0
		36	18	65.0	65.0
		42	18	65.0	65.0
		48	18	65.0	65.0
83 3/4	31 1/2 (X) 60 (XX)	30	18	65.0	65.0
		36	18	65.0	65.0
		42	18	65.0	65.0
		48	18	65.0	65.0
	37 1/2 (X) 71 3/4 (XX)	30	18	65.0	65.0
		36	18	65.0	65.0
		42	18	65.0	65.0
95 3/4	31 1/2 (X) 60 (XX)	30	18	65.0	65.0
		36	18	65.0	65.0
		42	18	65.0	65.0
	37 1/2 (X) 71 3/4 (XX)	30	18	65.0	65.0
		36	18	65.0	65.0

DOOR SIZE MUST COMPLY EGRESS REQUIREMENTS PER FBC.

NOTE:
GLASS CAPACITIES ON THIS SHEET ARE BASED ON ASTM E1300–04 (3 SEC. GUSTS) AND FLORIDA BUILDING COMMISSION DECLARATORY STATEMENT DCA05–DEC–219

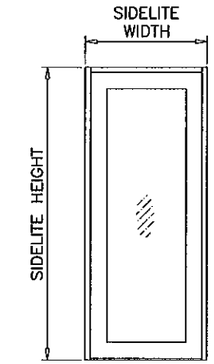

(O)

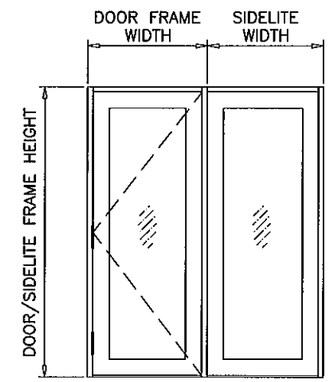

(XO)
(OX)

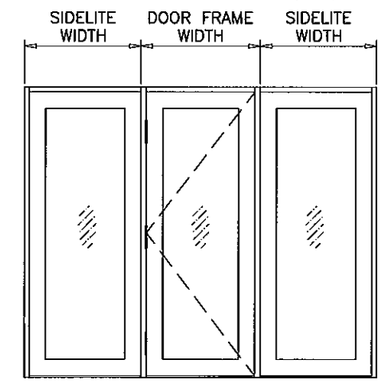

(OXO)

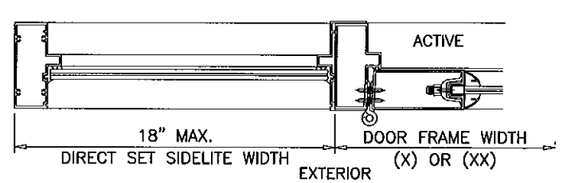

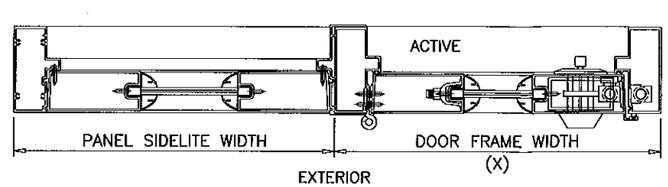

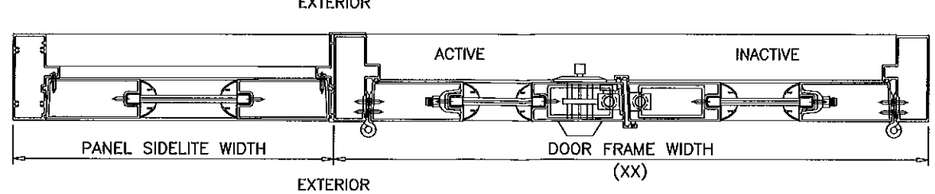

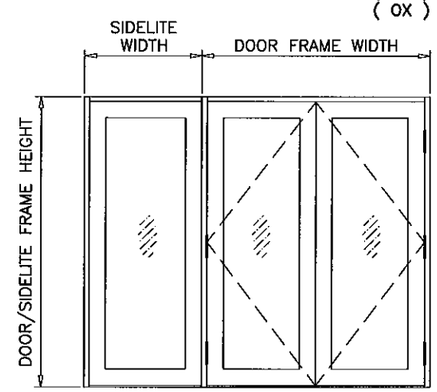

(OXX)
(XXO)

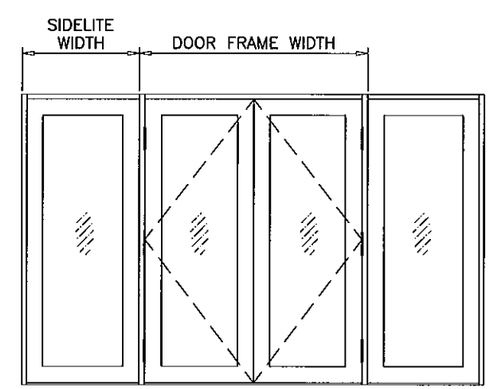

(OXXO)

Engr: JAVAD AHMAD
CIVIL
FLA. PE # 70592
C.A.N. 3538

DEC 09 2011

PRODUCT REVISED
as complying with the Florida Building Code
Acceptance No 11-1209.02
Expiration Date 11 3 17
By Ishas I. Chagul
Miami Dade Product Control

AL-FAROOQ CORPORATION
ENGINEERS & PRODUCT DEVELOPMENT
1235 S.W. 87 AVE
MIAMI, FLORIDA 33174
TEL. (305) 264-8100 FAX. (305) 262-6978
COMP-ANL\W01-64AWP

SERIES 1800 ALUM FRENCH DOOR W/ SIDELITES (L.M.I.)

TRULITE WINDOW & DOOR SOLUTIONS, LLC
8130 N.W. 74TH AVE.
MEDLEY, FL. 33166
TEL. (305) 887-2646 FAX (305) 883-1309

revisions:

no	date	by	description
D	01.29.07		REV. PER BCCO COMMENTS
E	02.03.09		GENERAL REVISION
F	09.02.10		MANUF. NAME REVISED
G	11.22.10		REV. PER BCCO COMMENTS
H	08.15.11		UPDATED FOR 2010 FBC

date: 09-17-01
scale: 3/8" = 1"
dr. by: HAMID
chk. by:

drawing no.
W01-64

HINGES:

EXTRUDED 1/8" THK AND 7-1/2" LONG TWO-PART ALUMINUM BUTT HINGE (PART No. YH-650), THREE PER LEAF, 11-1/2" FROM LEAF TOP AND BOTTOM TO HINGE'S CENTER LINE AND ONE AT MIDSPAN.

LOCK OPTIONS:

OPTION #1

STANDARD LOCK SET AND CYLINDER DEAD BOLT LATCH (FOR PRE-FABRICATED LOCK STILE PART No. YE-802, WITH 2-1/8" BORE AND 2-3/8" BACKSET TO FIT STANDARD LOCK SET), KEY OPERATED ON THE EXTERIOR AND THUMB TURN ON THE INTERIOR AT EACH ACTIVE LEAF .

MANUFACTURER'S MANUALLY OPERATED CONCEALED ZINC DIE-CAST FLUSH BOLT ASSEMBLY WITH STEEL EXTENSION ROD, ALUMINUM FLUSH BOLT GUIDE, STAINLESS STEEL FLUSH BOLT ADJUSTMENT PLATE AND PROTECTIVE MOLDED PLASTIC BOX FOR FLUSHBOLT AT THRESHOLD, AT 10-1/2" FROM TOP & BOTTOM OF ACTIVE & INACTIVE LEAFS.

OPTION #2

MANUFACTURER'S STEEL THREE POINT LOCK MECHANISM ALTERNATE TO STANDARD LOCK SET AT ACTIVE LEAF (FOR PRE-FABRICATED LOCK STILE PART No. YE-837) WITH THROW BOLTS CONNECTED TO MORTISE LOCK SET, ENGAGING INTO FRAME HEAD AND SILL AND KEY OPERATED ON THE EXTERIOR AND THUMB TURN ON THE INTERIOR

MANUFACTURER'S MANUALLY OPERATED CONCEALED ZINC DIE-CAST FLUSH BOLT ASSEMBLY WITH STEEL EXTENSION ROD, ALUMINUM FLUSH BOLT GUIDE, STAINLESS STEEL FLUSH BOLT ADJUSTMENT PLATE AND PROTECTIVE MOLDED PLASTIC BOX FOR FLUSHBOLT AT THRESHOLD, AT 10-1/2" FROM TOP & BOTTOM OF INACTIVE LEAF.

NOTE:
TOP AND BOTTOM FLUSH BOLTS MUST BE ENGAGED DURING PERIODS OF HURRICANE WARNING.

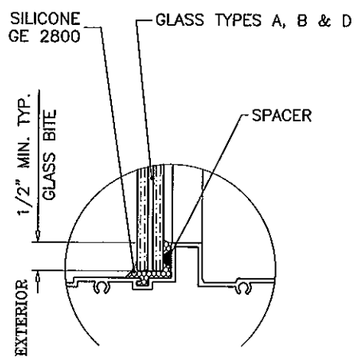

GLAZING DETAIL AT
DIRECT SET SIDELITE

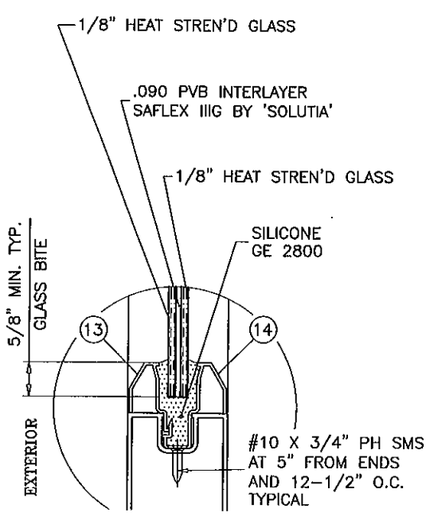

GLASS TYPE 'A'

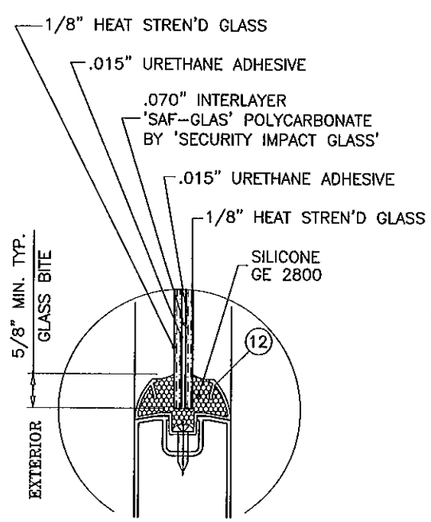

GLASS TYPE 'B'

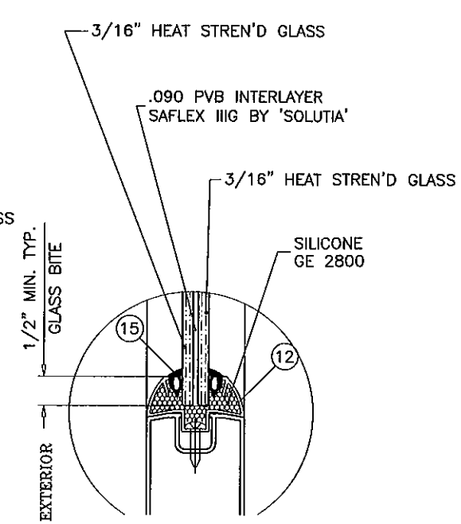

GLASS TYPE 'D'

GLAZING OPTIONS

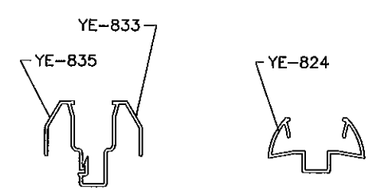

GLAZING ADAPTER OPTIONS

PRODUCT REVISED
to comply with the Florida
Building Code
Acceptance No. 11-1209.02
Expiration Date 1/3/17
By
Miami Dade Product Control

Engr: JAVAD AHMAD
CIVIL
FLA. PE # 70592
C.A.N. 3538
DEC 08 2011

AL-FAROOQ CORPORATION
ENGINEERS & PRODUCT DEVELOPMENT
1235 S.W. 87 AVE
MIAMI, FLORIDA 33174
TEL. (305) 264-8100 FAX. (305) 262-6978
COMP-ANL\W01-64AWP

SERIES 1800 ALUM FRENCH DOOR W/ SIDELITES (L.M.I.)

TRULITE WINDOW & DOOR SOLUTIONS, LLC
8130 N.W. 74TH AVE.
MEDLEY, FL. 33166
TEL. (305) 887-2646 FAX (305) 883-1309

revisions:

no	date	by	description
D	01.29.07		REV. PER BCCO COMMENTS
E	02.03.09		GENERAL REVISION
F	09.02.10		MANUF. NAME REVISED
G	11.22.10		REV. PER BCCO COMMENTS
H	08.15.11		UPDATED FOR 2010 FBC

date: 09-17-01
scale: 3/8" = 1"
dr. by: HAMID
chk. by:

drawing no.
W01-64

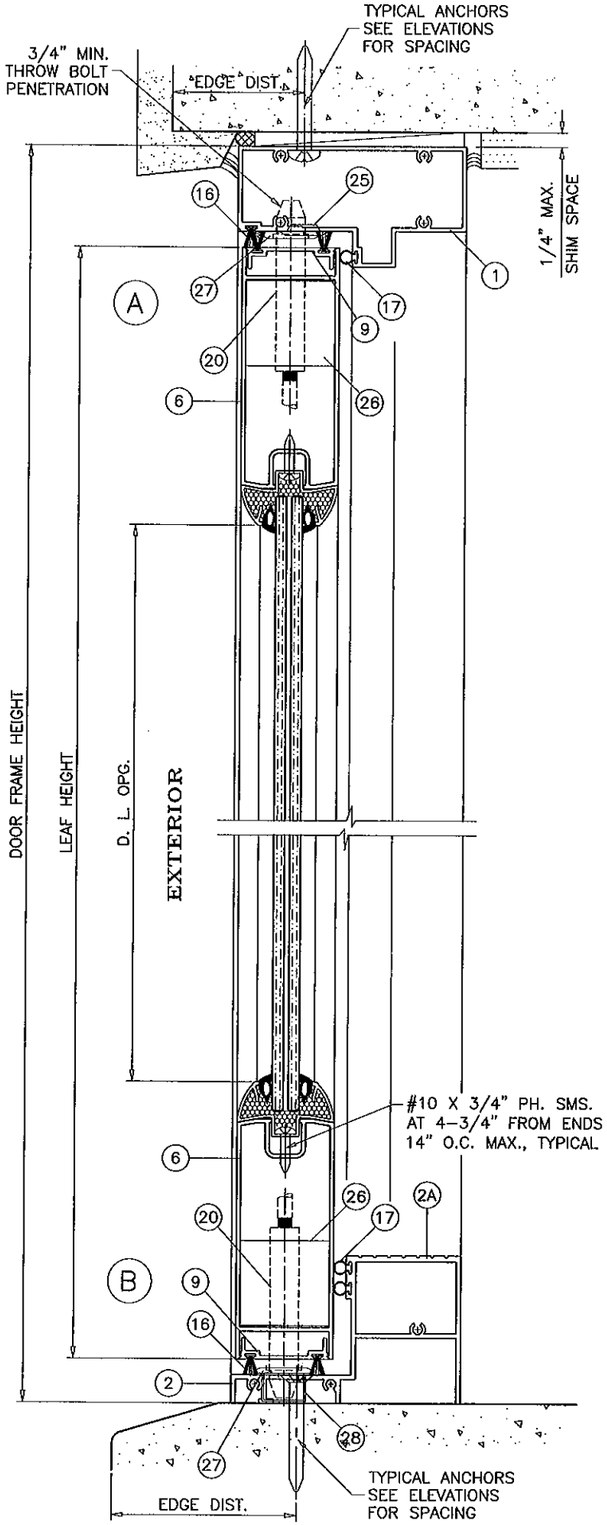

OPERATING UNITS

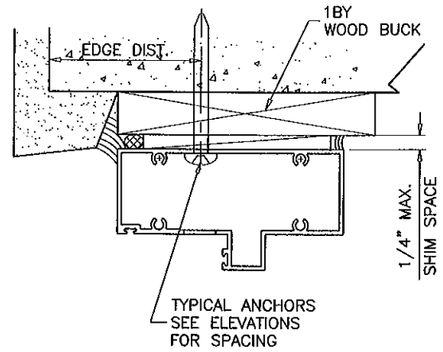

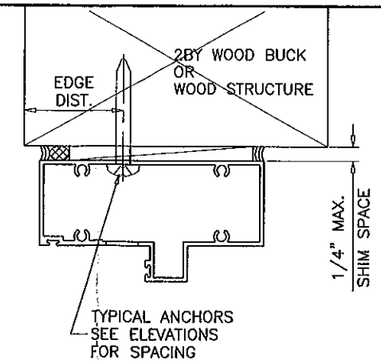

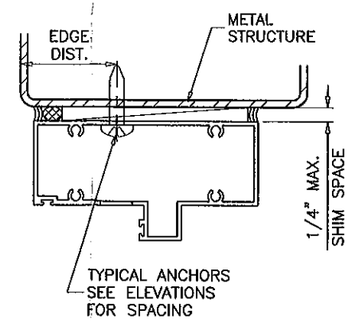

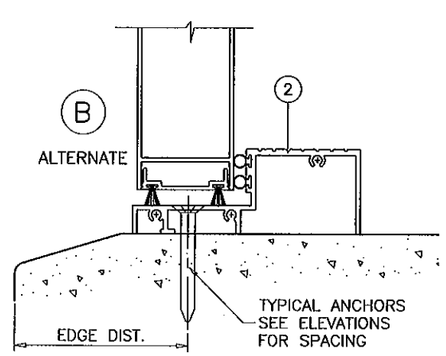

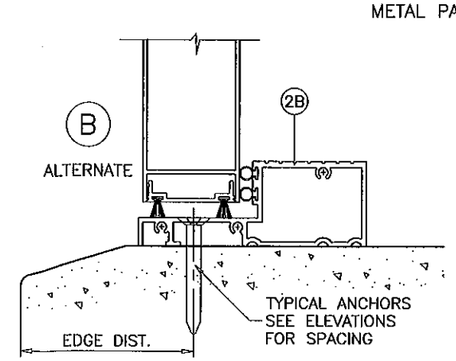

WOOD BUCKS AND METAL STRUCTURE NOT BY TRULITE MUST SUSTAIN LOADS IMPOSED BY GLAZING SYSTEM AND TRANSFER THEM TO THE BUILDING STRUCTURE.

TYPICAL ANCHORS: SEE ELEV. FOR SPACING

1/4" DIA. TAPCON BY 'ITW' OR

1/4" DIA. ULTRACON BY 'ELCO' (Fu=177 KSI, Fy=155 KSI)

INTO 2BY WOOD BUCKS OR WOOD STRUCTURES
1-1/2" MIN. PENETRATION INTO WOOD

THRU 1BY BUCKS INTO CONC. OR MASONRY
1-1/4" MIN. EMBED INTO CONC. OR MASONRY

DIRECTLY INTO CONC. OR MASONRY
1-1/4" MIN. EMBED INTO CONC. OR MASONRY

#14 SMS OR SELF DRILLING SCREWS (GRADE 2 CRS)

INTO METAL STRUCTURES

STEEL : 12 GA. MIN. (Fy = 36 KSI MIN.)
ALUMINUM : 1/8" THK. MIN. (6063-T5 MIN.)
(STEEL IN CONTACT WITH ALUMINUM TO BE PLATED OR PAINTED)

#12 SMS OR SELF DRILLING SCREWS

INTO MIAMI-DADE COUNTY APPROVED MULLIONS (MIN. THK. = 1/8")
(NO SHIM SPACE)

TYPICAL EDGE DISTANCE

INTO CONCRETE AND MASONRY = 2-1/2" MIN.
INTO WOOD STRUCTURE = 1" MIN.
INTO METAL STRUCTURE = 3/4" MIN.

CONCRETE AT HEAD, SILL OR JAMBS f'c = 3000 PSI MIN.
C-90 HOLLOW/FILLED BLOCK AT JAMBS f'm = 2000 PSI MIN.

SEALANTS:

FRAME AND LEAF CORNERS, INSTALLATION SCREWS AT SILL AND ALL METAL PARTS CONNECTIONS SEALED WITH CLEAR COLORED SILICONE.

PRODUCT REVISED
as complying with the Florida Building Code
Acceptance No. 11-1209.02
Expiration Date 1/3/17
By [signature]
Miami Dade Product Control

Engr: JAVAD AHMAD
CIVIL.
FLA. PE # 70592
C.A.N. 3538
DEC 08 2011

AL-FAROOQ CORPORATION
ENGINEERS & PRODUCT DEVELOPMENT
1235 S.W. 87 AVE
MIAMI, FLORIDA 33174
TEL. (305) 264-8100 FAX. (305) 262-6978
COMP-ANL\W01-64AWP

SERIES 1800 ALUM FRENCH DOOR W/ SIDELITES (L.M.I.)

TRULITE WINDOW & DOOR SOLUTIONS, LLC
8130 N.W. 74TH AVE.
MEDLEY, FL. 33166
TEL. (305) 887-2646 FAX (305) 883-1309

revisions:

no	date	by	description
D	01.29.07		REV. PER BCCO COMMENTS
E	02.03.09		GENERAL REVISION
F	09.02.10		MANUF. NAME REVISED
G	11.22.10		REV. PER BCCO COMMENTS
H	08.15.11		UPDATED FOR 2010 FBC

date: 09-17-01
scale: 3/8" = 1"
dr. by: HAMID
chk. by:

drawing no.
W01-64

sheet 6 of 15

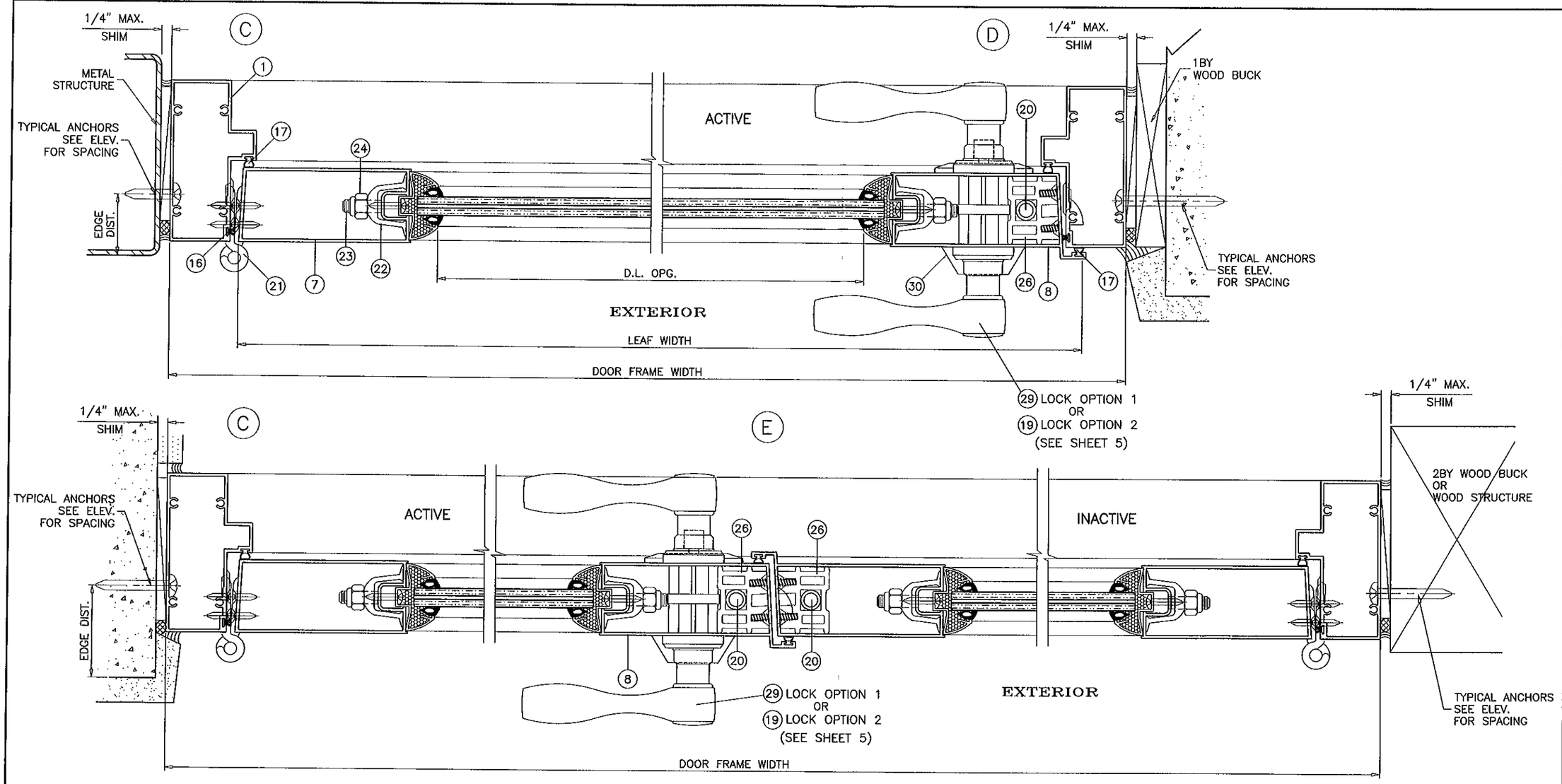

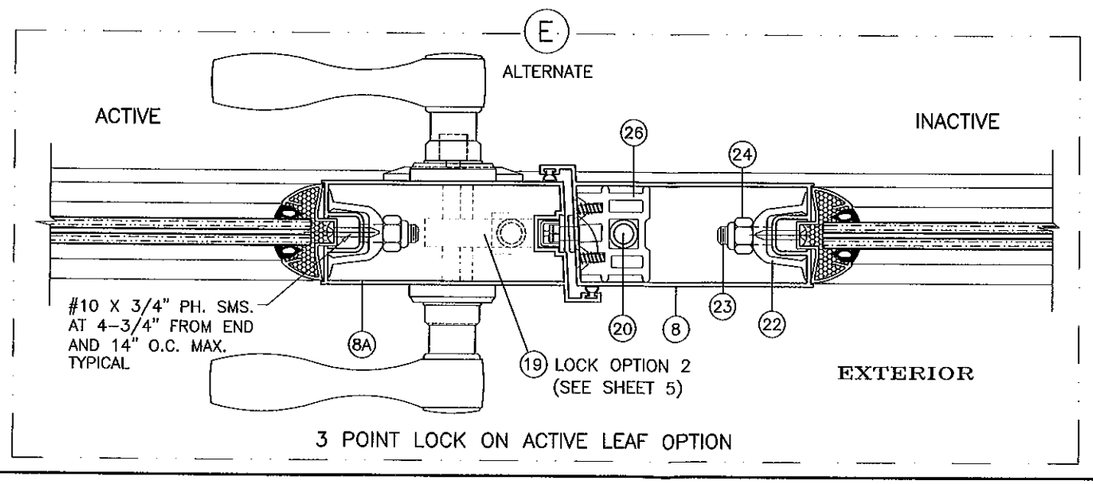

3 POINT LOCK ON ACTIVE LEAF OPTION

OPERATING UNITS

PRODUCT REVISED
as complying with the Florida Building Code
Acceptance No. 11-1209.02
Expiration Date 1/3/17
By Ishaq I. Chanda
Miami Dade Product Control

Engr: JAVAD AHMAD
CIVIL
FLA. PE # 70592
C.A.N. 3538

DEC 08 2011

AL-FAROOQ CORPORATION
ENGINEERS & PRODUCT DEVELOPMENT
1235 S.W. 87 AVE
MIAMI, FLORIDA 33174
TEL. (305) 264-8100 FAX. (305) 262-6978
COMP-ANL\W01-64AWP

SERIES 1800 ALUM FRENCH DOOR W/ SIDELITES (L.M.I.)

TRULITE WINDOW & DOOR SOLUTIONS, LLC
8130 N.W. 74TH AVE.
MEDLEY, FL. 33166
TEL. (305) 887-2646 FAX (305) 883-1309

revisions:

no	date	by	description
D	01.29.07		NO CHANGE THIS SHEET
E	02.03.09		GENERAL REVISION
F	09.02.10		MANUF. NAME REVISED
G	11.22.10		REV. PER BCCO COMMENTS
H	08.15.11		UPDATED FOR 2010 FBC

date: 09-17-01
scale: 3/8" = 1"
dr. by: HAMID
chk. by:

drawing no.
W01-64

PANEL SIDELITE INSTALLATION DETAILS

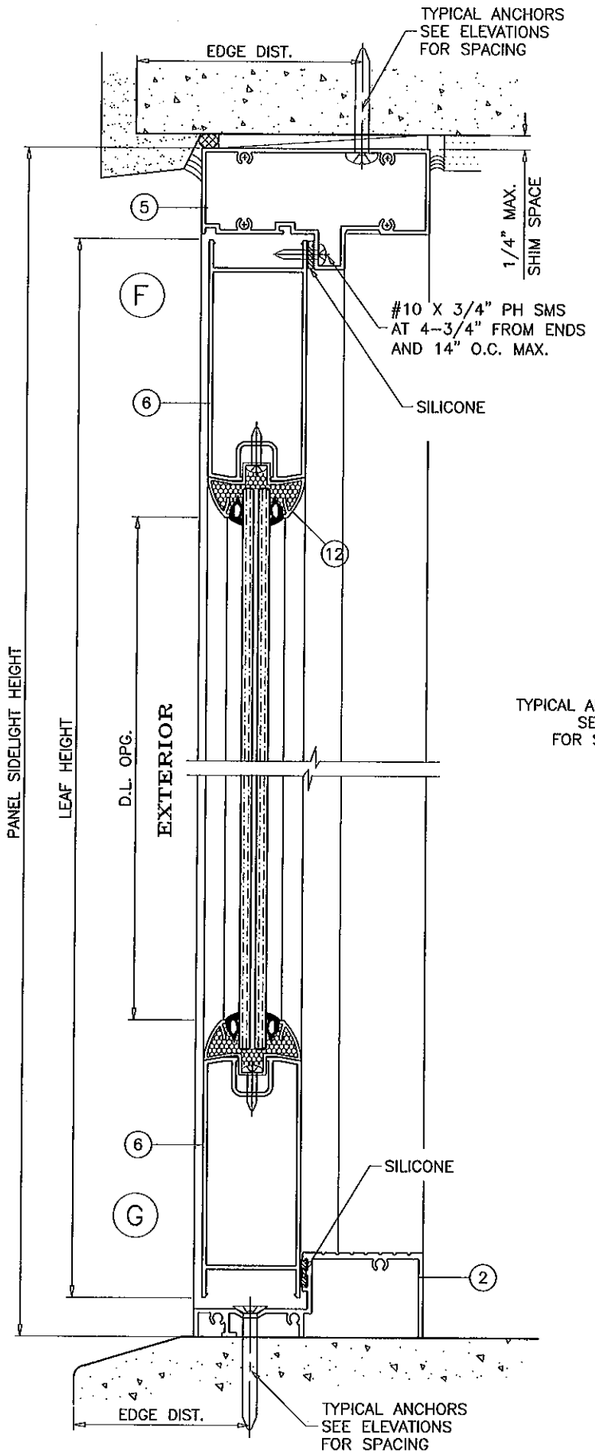

PANEL SIDELITE UNITS

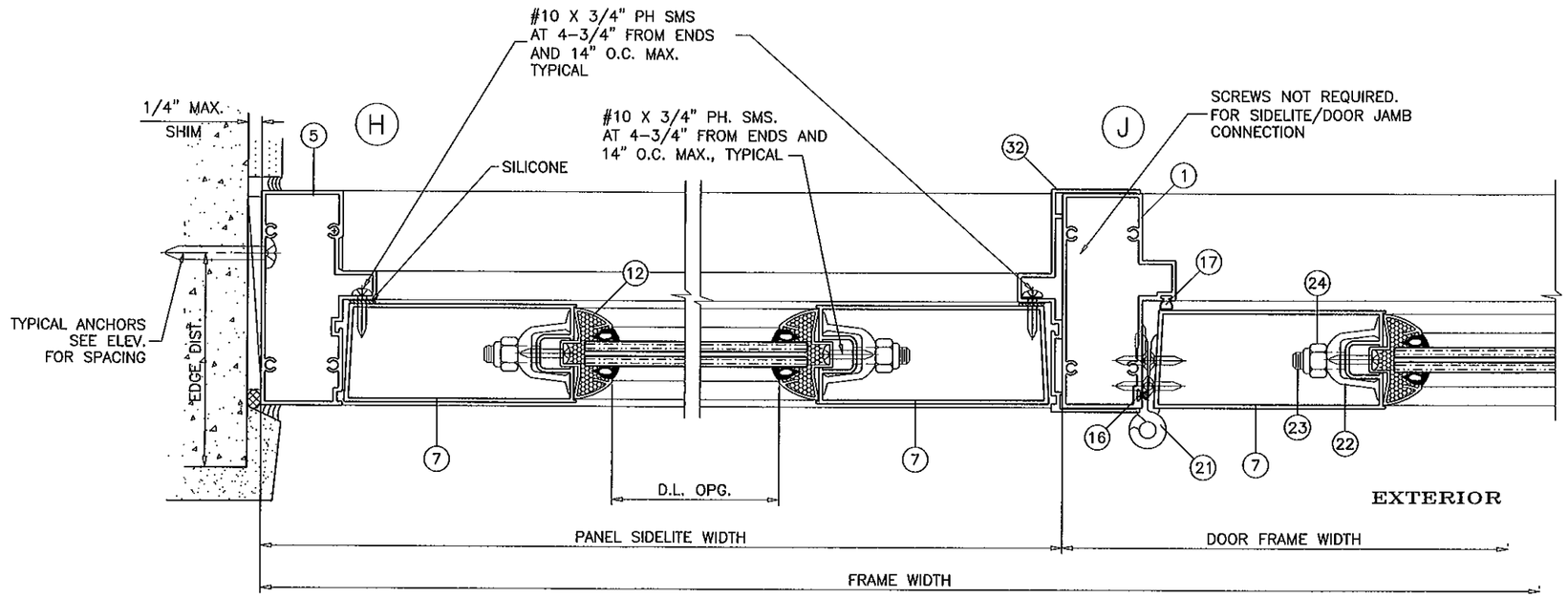

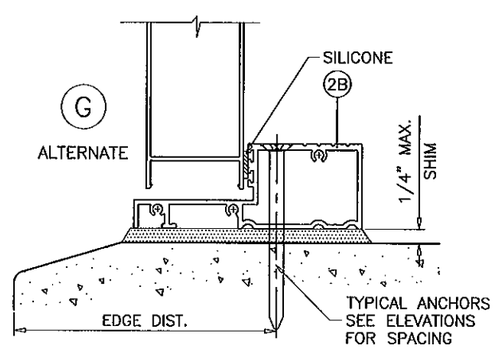

PRODUCT REVISED
as complying with the Florida
Building Code
Acceptance No. 11-1209.02
Expiration Date 1-13-17
By Ishaq I. Chanda
Miami Dade Product Control

Engr: JAVAD AHMAD
CIVIL
FLA. PE # 70592
C.A.N. 7539
DEC 08 2011

AL-FAROOQ CORPORATION
ENGINEERS & PRODUCT DEVELOPMENT
1235 S.W. 87 AVE
MIAMI, FLORIDA 33174
TEL. (305) 264-8100 FAX. (305) 262-6978

COMP-ANL\W01-64AWP

SERIES 1800 ALUM FRENCH DOOR W/ SIDELITES (L.M.I.)

TRULITE WINDOW & DOOR SOLUTIONS, LLC
8130 N.W. 74TH AVE.
MEDLEY, FL. 33166
TEL. (305) 887-2646 FAX (305) 883-1309

revisions:

no	date	by	description
D	01.29.07		REV. PER BCCO COMMENTS
E	02.03.09		GENERAL REVISION
F	09.02.10		MANUF. NAME REVISED
G	11.22.10		REV. PER BCCO COMMENTS
H	08.15.11		UPDATED FOR 2010 FBC

date: 09-17-01
scale: 3/8" = 1"
dr. by: HAMID
chk. by:

drawing no.
W01-64

DIRECT SET SIDELITE INSTALLATION DETAILS

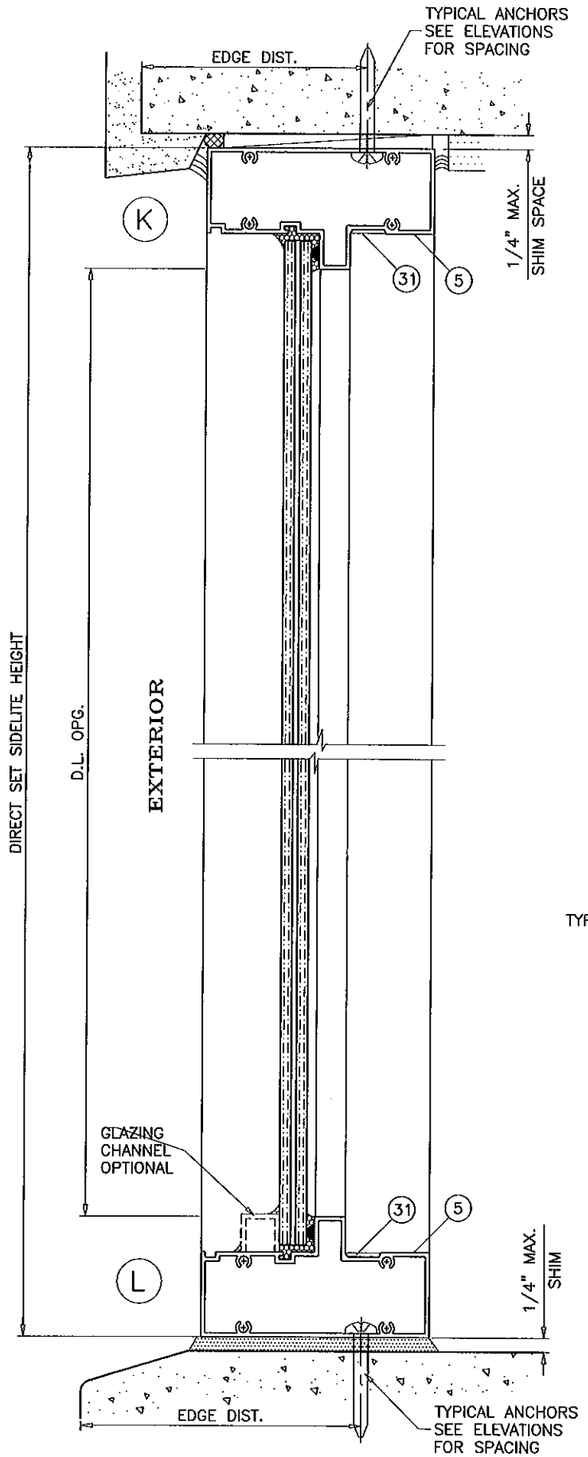

DIRECT SET SIDELITE UNITS

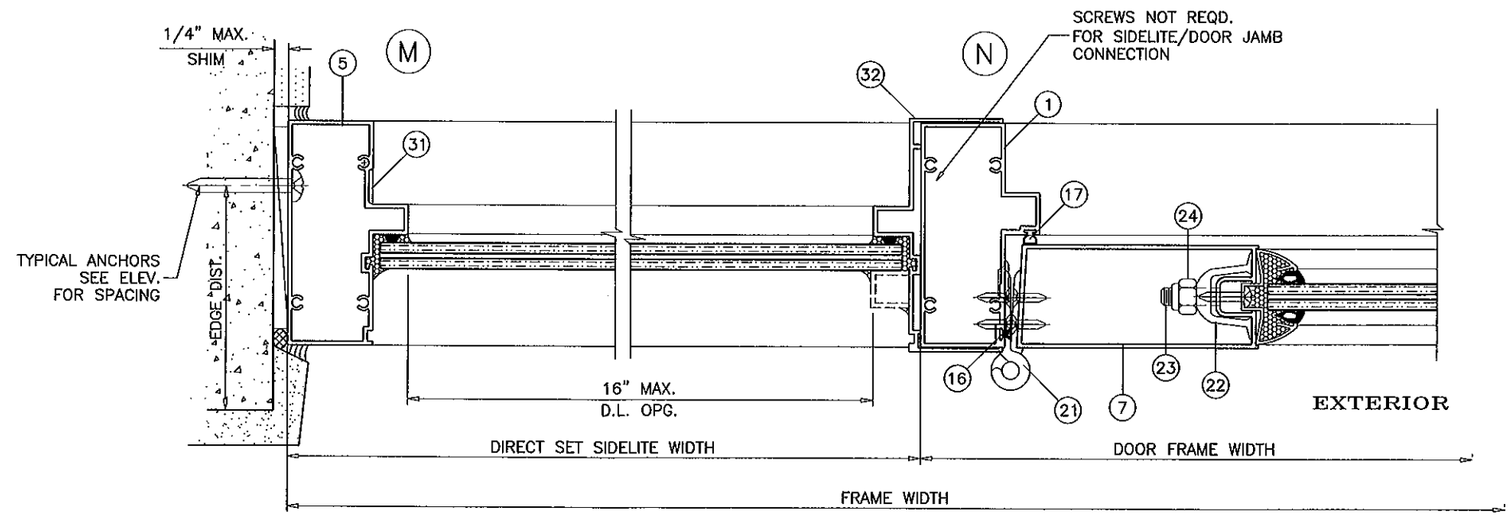

PRODUCT REVISED
as complying with the Florida Building Code
Acceptance No 11-1209.02
Expiration Date 1/3/17
By [signature]
Miami Dade Product Control

Engr: JAVAD AHMAD
CIVIL
FLA. PE # 70592
C.A.N. 3538
DEC 08 2011

AL-FAROOQ CORPORATION
ENGINEERS & PRODUCT DEVELOPMENT
1235 S.W. 87 AVE
MIAMI, FLORIDA 33174
TEL. (305) 264-8100 FAX. (305) 262-6978
COMP-ANL\W01-64AWP

SERIES 1800 ALUM FRENCH DOOR W/ SIDELITES (L.M.I.)

TRULITE WINDOW & DOOR SOLUTIONS, LLC
8130 N.W. 74TH AVE.
MEDLEY, FL. 33166
TEL. (305) 887-2646 FAX (305) 883-1309

revisions:

no	date	by	description
D	01.29.07		NO CHANGE THIS SHEET
E	02.03.09		GENERAL REVISION
F	09.02.10		MANUF. NAME REVISED
G	11.22.10		REV. PER BCCO COMMENTS
H	08.15.11		UPDATED FOR 2010 FBC

date: 09-17-01
scale: 3/8" = 1"
dr. by: HAMID
chk. by:

drawing no.
W01-64

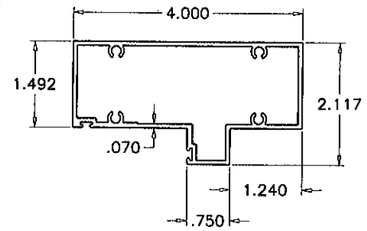

(1) DOOR FRAME HEAD

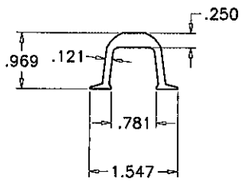

(22) PRESSURE PLATE

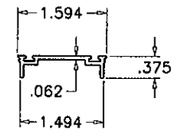

(9) SNAP CAP

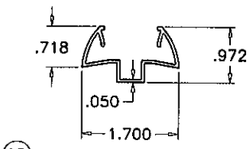

(12) GLAZING CHANNEL

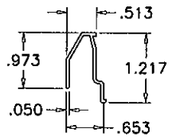

(13) EXT. GLAZING LEG

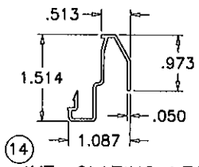

(14) INT. GLAZING LEG

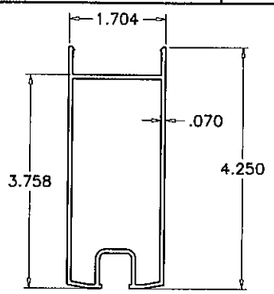

(6) TOP/BOTTOM RAIL

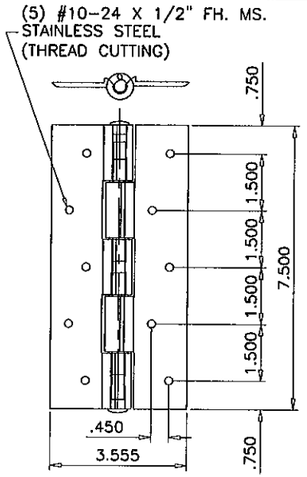

(21) HINGE ASSEMBLY

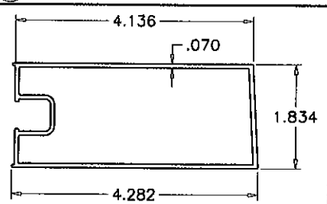

(7) HINGE STILE

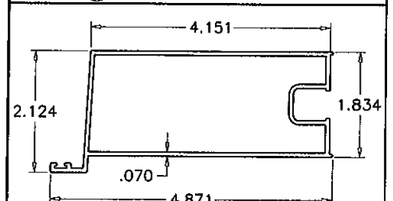

(8) LOCK STILE

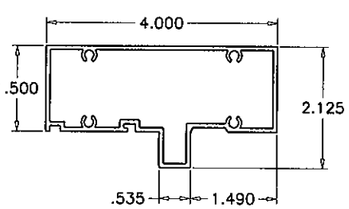

(5) SIDELITE FRAME

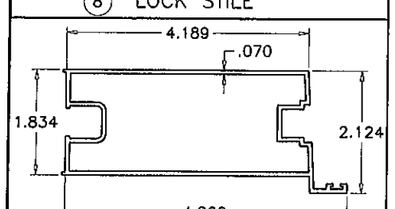

(8A) LOCK STILE
(FOR 3 POINT LOCK OPTION)

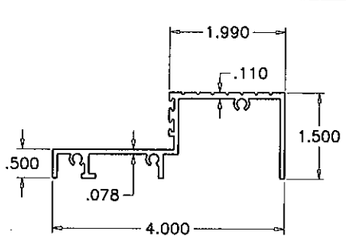

(2) STD. THRESHOLD

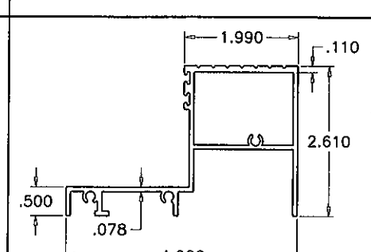

(2A) HI-RISETHRESHOLD

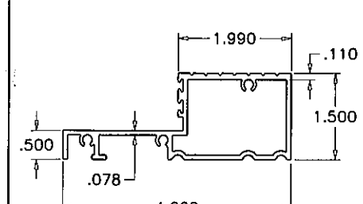

(2B) OPTIONAL THRESHOLD

ITEM #	PART #	REQD.	DESCRIPTION	MATERIAL	MANF./SUPPLIER/REMARKS
1	YE-832	1	DOOR FRAME HEAD/JAMB	6063-T6	–
2	YE-810	1	STD. THRESHOLD	6063-T6	–
2A	YE-1820	1	HI-RISE THRESHOLD	6063-T6	–
2B	YE-840	1	OPTIONAL THRESHOLD	6063-T6	–
5	YH-809	AS REQD.	SIDELITE FRAME	6063-T6	–
6	YE-801	2/ LEAF	DOOR LEAF TOP AND BOTTOM RAIL	6063-T6	–
7	YE-803	1	DOOR LEAF JAMB – HINGE SIDE	6063-T5	–
8	YE-802	1	DOOR LEAF – LOCK SIDE	6063-T5	–
8A	YE-837	1	DOOR LEAF – LOCK SIDE (3 POINT LOCK)	6063-T5	–
9	YE-806	2/ LEAF	SNAP CAP FOR DOOR LEAF & SILL	6063-T5	–
10	YE-816	AS REQD.	COVER PLATE	6063-T5	–
12	YE-824	4/ LEAF	GLAZING CHANNEL	6063-T6	–
13	YE-835	AS REQD.	EXTERIOR GLAZING LEG	6063-T5	–
14	YE-833	AS REQD.	INTERIOR GLAZING LEG	6063-T5	–
15	YH-623	AS REQD.	GLAZING GASKET	VINYL	DUROMETER 75 SHORE A
16	YH-4004	AS REQD.	WOOL FIN WEATHERSTRIPPING (.187 X .260)	–	ULTRAFAB
17	YH-622	AS REQD.	BULB WEATHERSTRIPPING (.198 X .260)	VINYL	DUROMETER 75 SHORE A
19	GU	1/ACTIVE LEAF	3 POINT LOCK MECHANISM (OPTIONAL)	S. STEEL	–
20	YH-610	AS REQD.	FLUSH BOLT ASSY. SERIES 1202	ZINC	DIECAST
21	YH-650	3/ LEAF	BUTT HINGES, AT 11-1/2" FROM ENDS & MIDSPAN	ALUMINUM	WITH SS PIN
22	YE-805	4/ LEAF	PRESSURE PLATE-TIE ROD	6063-T5	2-1/2" LONG
23	YH-630	2/ LEAF	3/8" DIA. THREADED ROD	STEEL	–
24	YH-618	2/ LEAF	3/8"-16 HEX FLANGE NUT	STEEL	–
25	YH-641	AS REQD.	INSTALLATION SCREW HOLE CAP	PLASTIC	–
26	YE-842	2/ LEAF	FLUSH BOLT GUIDE, 1-1/2" LONG	6063-T6	–
27	YH-656	2/ LEAF	FLUSH BOLT ADJUSTMENT PLATE	S. STEEL	–
28	YH-681	1	PROTECTIVE BOX	NYLON	–
29	YH-616	1	LOCK SET ASSEMBLY	–	LEVER OR KNOB TYPES
30	YH-617	1	DEADBOLT ASSEMBLY	–	–
31	YH-816	AS REQD.	INSTALLATION SCREW COVER STRIP	6063-T6	–
32	YH-808	AS REQD.	SIDELITE FRAME MULLION	6063-T6	–

PRODUCT REVISED
to comply with the Florida
Building Code
Acceptance No 11-1209.02
Expiration Date 1/3/17
By Isaac L. Lagard
Miami Dade Product Control

Engr: JAVAD AHMAD
CIVIL
FLA. PE # 70592
C.A.N. 3538
DEC 8 2011

AL-FAROOQ CORPORATION
ENGINEERS & PRODUCT DEVELOPMENT
1235 S.W. 87 AVE
MIAMI, FLORIDA 33174
TEL (305) 264-8100 FAX. (305) 262-6978

COMP-ANL\W01-64AWP

SERIES 1800 ALUM FRENCH DOOR W/ SIDELITES (L.M.I.)

TRULITE WINDOW & DOOR SOLUTIONS, LLC
8130 N.W. 74TH AVE.
MEDLEY, FL. 33166
TEL. (305) 887-2646 FAX (305) 883-1309

revisions:

no	date	by	description
D	01.29.07		NO CHANGE THIS SHEET
E	02.03.09		GENERAL REVISION
F	09.02.10		MANUF. NAME REVISED
G	11.22.10		REV. PER BCCO COMMENTS
H	08.15.11		UPDATED FOR 2010 FBC

date: 09-17-01
scale: 3/8" = 1"
dr. by: HAMID
chk. by:

drawing no.
W01-64

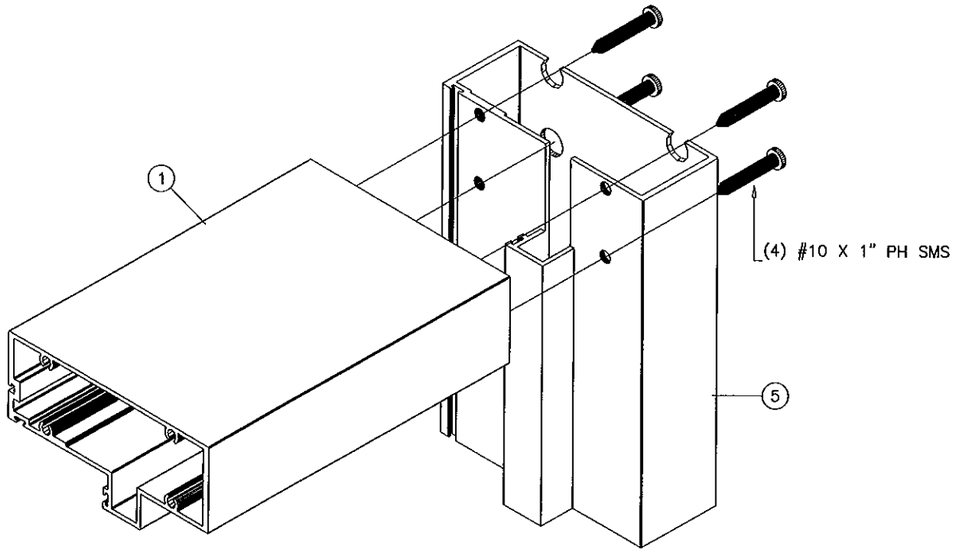

FRAME UPPER CORNER

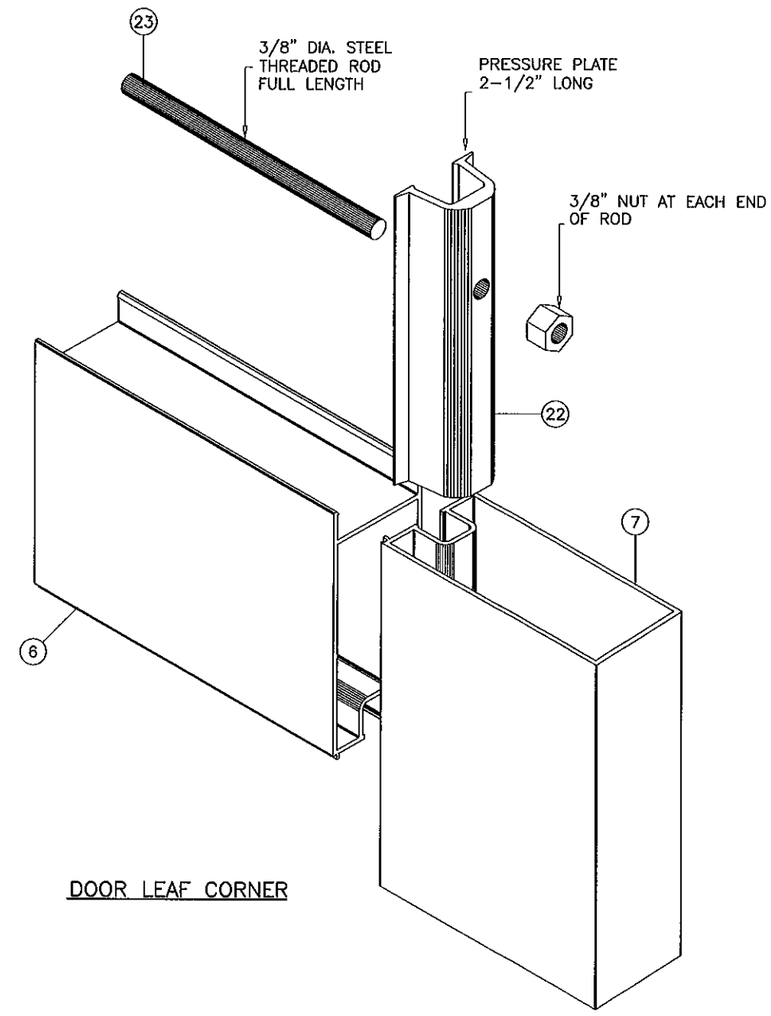

DOOR LEAF CORNER

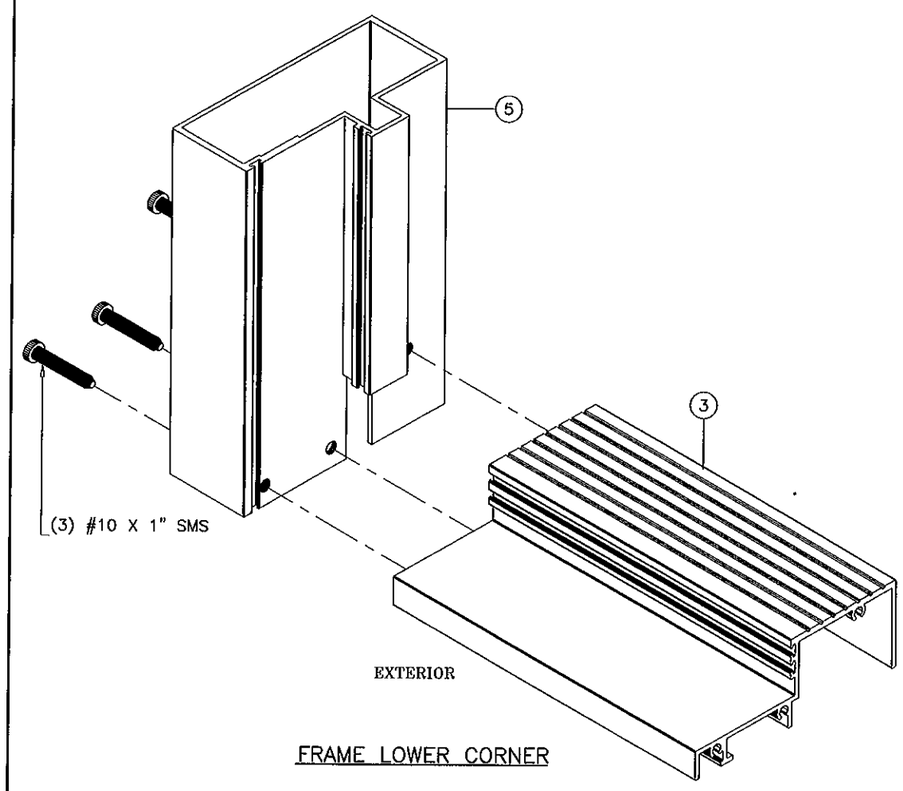

FRAME LOWER CORNER

PRODUCT REVISED
as complying with the Florida Building Code
Acceptance No 11-1209.02
Expiration Date 1/3/17
By Ishag I. Chaute
Miami Dade Product Control

Engr: JAVAD AHMAD
CIVIL
FLA. PE # 70592
C.A.N. 3538

DEC 08 2011

AL-FAROOQ CORPORATION
ENGINEERS & PRODUCT DEVELOPMENT
1235 S.W. 87 AVE
MIAMI, FLORIDA 33174
TEL. (305) 264-8100 FAX. (305) 262-6978
COMP-ANL\W01-64AWP

SERIES 1800 ALUM FRENCH DOOR W/ SIDELITES (L.M.I.)

TRULITE WINDOW & DOOR SOLUTIONS, LLC
8130 N.W. 74TH AVE.
MEDLEY, FL. 33166
TEL. (305) 887-2646 FAX (305) 883-1309

revisions:

no	date	by	description
D	01.29.07		NO CHANGE THIS SHEET
E	02.03.09		GENERAL REVISION
F	09.02.10		MANUF. NAME REVISED
G	11.22.10		REV. PER BCCO COMMENTS
H	08.15.11		UPDATED FOR 2010 FBC

date: 09-17-01
scale: 3/8" = 1"
dr. by: HAMID
chk. by:

drawing no.
W01-64

sheet 11 of 15

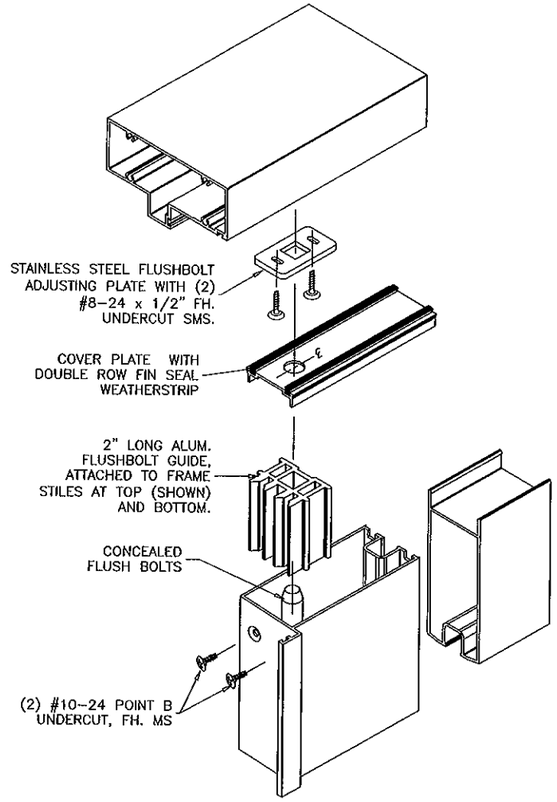

TOP FLUSHBOLT ASSEMBLY

FLUSH BOLT GUIDE
AND ADJUSTMENT PLATE ASSEMBLY

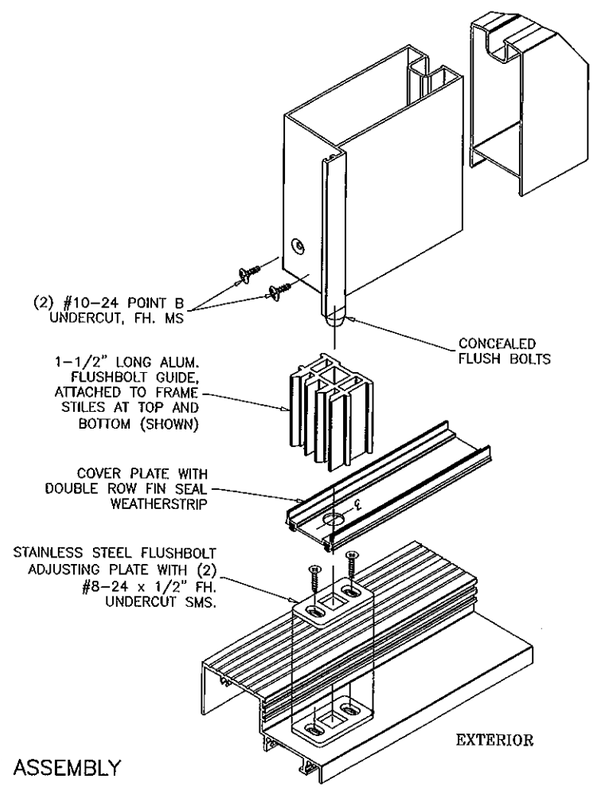

BOTTOM FLUSHBOLT ASSEMBLY

Engr: JAVAD AHMAD
CIVIL
FLA. PE # 70592
C.A.N. 3538
DEC 08 2011

PRODUCT REVISED
as complying with the Florida Building Code
Acceptance No. 11-1209.02
Expiration Date 1/3/17
By Ishaq I. Chaudhary
Miami Dade Product Control

AL-FAROOQ CORPORATION
ENGINEERS & PRODUCT DEVELOPMENT
1235 S.W. 87 AVE
MIAMI, FLORIDA 33174
TEL. (305) 264-8100 FAX. (305) 262-6978
COMP-ANL\W01-64AWP

SERIES 1800 ALUM FRENCH DOOR W/ SIDELITES (L.M.I.)

TRULITE WINDOW & DOOR SOLUTIONS, LLC
8130 N.W. 74TH AVE.
MEDLEY, FL. 33166
TEL. (305) 887-2646 FAX (305) 883-1309

revisions:

no	date	by	description
D	01.29.07		NO CHANGE THIS SHEET
E	02.03.09		GENERAL REVISION
F	09.02.10		MANUF. NAME REVISED
G	11.22.10		REV. PER BCCO COMMENTS
H	08.15.11		UPDATED FOR 2010 FBC

date: 09-17-01
scale: 3/8" = 1"
dr. by: HAMID
chk. by:

drawing no.
W01-64

sheet 12 of 15

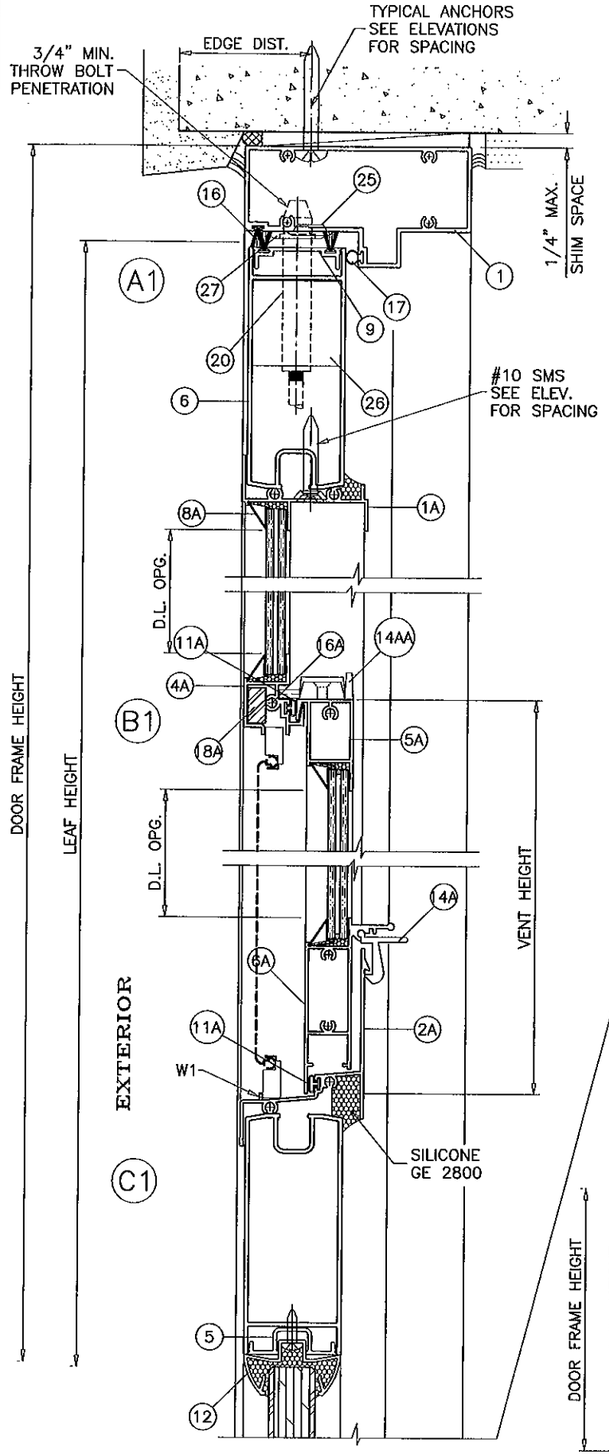

SINGLE (X) OPERATING UNITS W/ S.H. WDW.

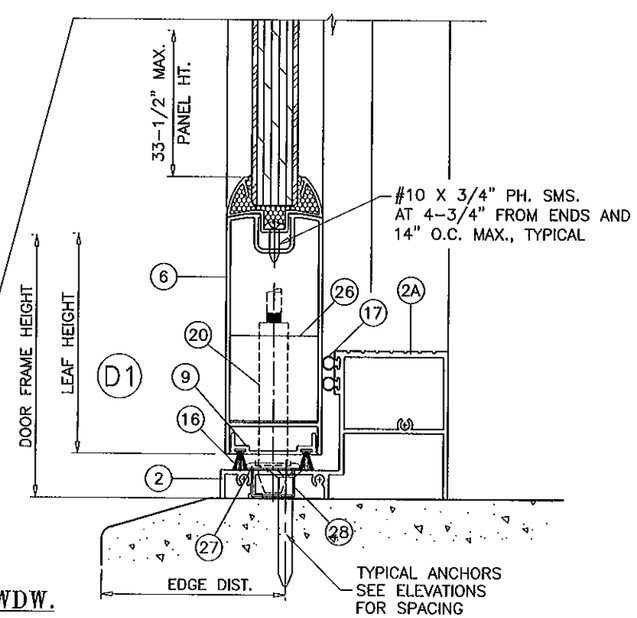

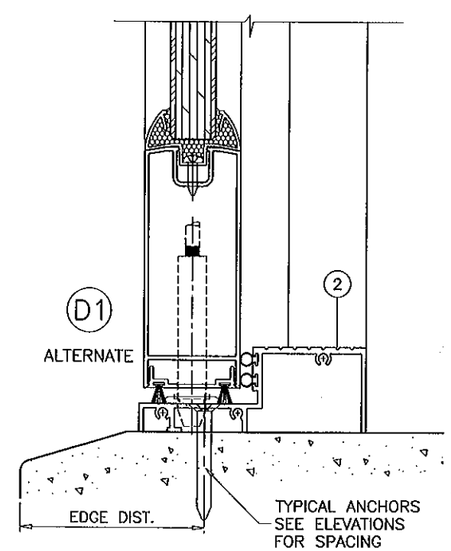

WEEPHOLES:

W1 = 1" LONG WEEP NOTCH AT EACH END

PRODUCT REVISED
as complying with the Florida
Building Code
Acceptance No. 11-1209.02
Expiration Date 1/3/17
By [illegible]
Miami Dade Product Control

Engr: JAVAD AHMAD
CIVIL
FLA. PE # 70592
C.A.N. 3538
DEC 08 2011

AL-FAROOQ CORPORATION
ENGINEERS & PRODUCT DEVELOPMENT
1235 S.W. 87 AVE
MIAMI, FLORIDA 33174
TEL (305) 264-8100 FAX. (305) 262-6978
COMP-ANL\W01-64AWP

SERIES 1800 ALUM FRENCH DOOR W/ SIDELITES (L.M.I.)

TRULITE WINDOW & DOOR SOLUTIONS, LLC
8130 N.W. 74TH AVE.
MEDLEY, FL. 33166
TEL (305) 887-2646 FAX (305) 883-1309

revisions:

no	date	by	description
D	01.29.07		NO CHANGE THIS SHEET
E	02.03.09		GENERAL REVISION
F	09.02.10		MANUF. NAME REVISED
G	11.22.10		REV. PER BCCO COMMENTS
H	08.15.11		UPDATED FOR 2010 FBC

date: 09-17-01
scale: 3/8" = 1"
dr. by: HAMID
chk. by:

drawing no.
W01-64

sheet 13 of 15

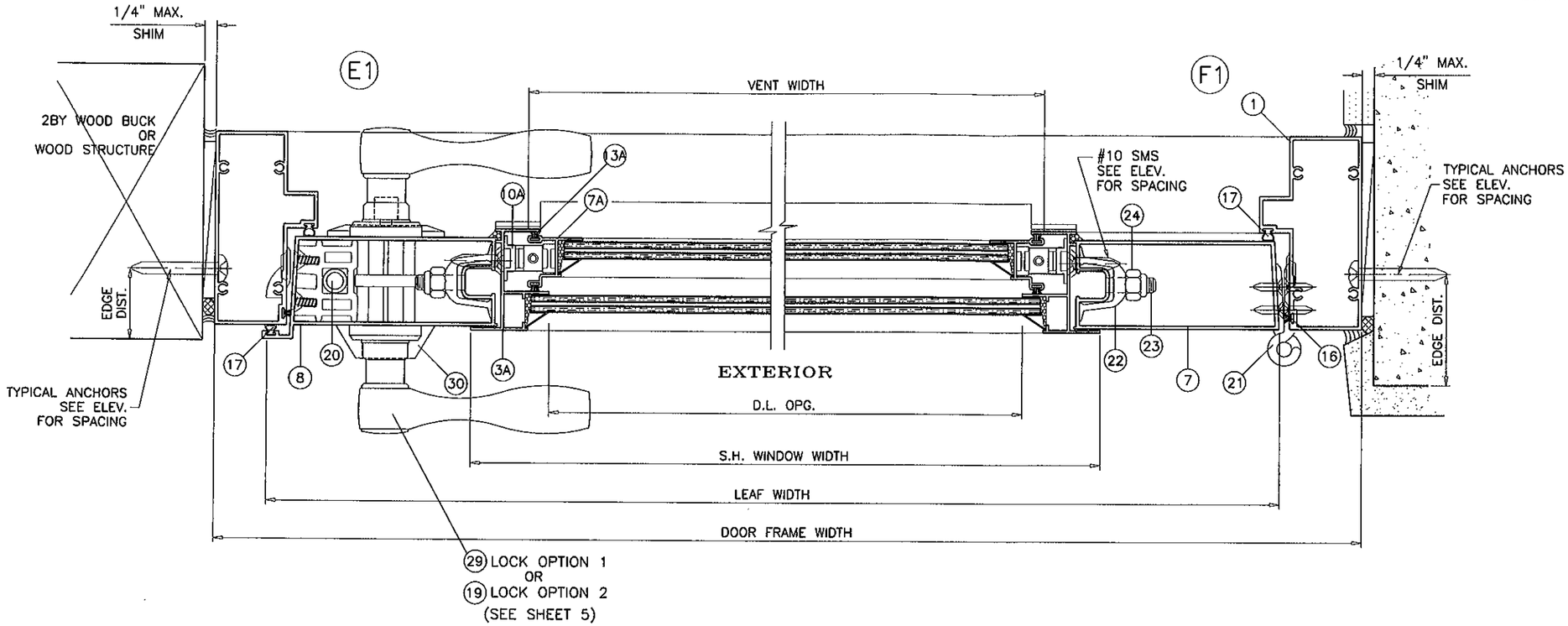

PRODUCT REVISED
as complying with the Florida
Building Code
Acceptance No 11-1209.02
Expiration Date 1/3/17
By Ishaq I. Chanda
Miami Dade Product Control

Engr. JAVAD AHMAD
CIVIL
FLA. P.E. # 70592
C.A.N. 3538
DEC 8 2011

AL-FAROOQ CORPORATION
ENGINEERS & PRODUCT DEVELOPMENT
1235 S.W. 87 AVE
MIAMI, FLORIDA 33174
TEL. (305) 264-8100 FAX. (305) 262-6978
COMP-ANL\W01-64AWP

SERIES 1800 ALUM FRENCH DOOR W/ SIDELITES (L.M.I.)

TRULITE WINDOW & DOOR SOLUTIONS, LLC
8130 N.W. 74TH AVE.
MEDLEY, FL. 33166
TEL. (305) 887-2646 FAX (305) 883-1309

revisions:

no	date	by	description
D	01.29.07		NO CHANGE THIS SHEET
E	02.03.09		GENERAL REVISION
F	09.02.10		MANUF. NAME REVISED
G	11.22.10		REV. PER BCCO COMMENTS
H	08.15.11		UPDATED FOR 2010 FBC

date: 09-17-01
scale: 3/8" = 1"
dr. by: HAMID
chk. by:

drawing no.
W01-64

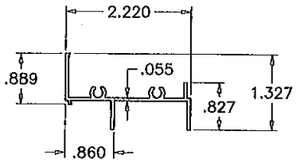

(1A) FRAME HEAD

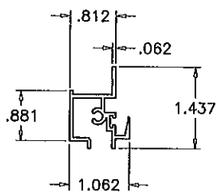

(4A) FIXED RAIL

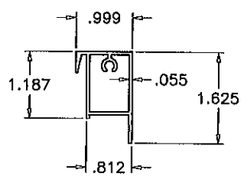

(5A) VENT TOP RAIL

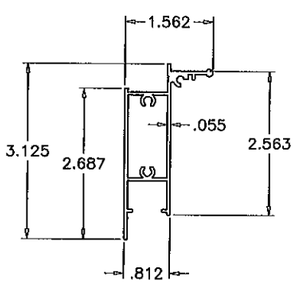

(6A) VENT BOTTOM RAIL

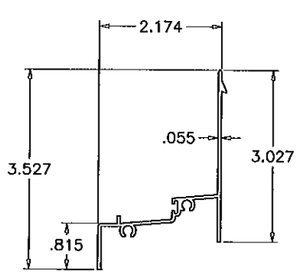

(2A) FRAME SILL

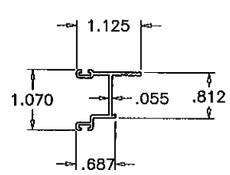

(7A) VENT SIDE RAIL

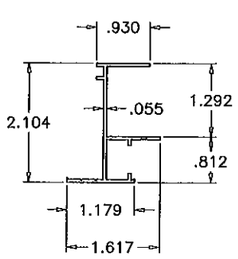

(3A) FRAME JAMB

ITEM #	PART #	REQD.	DESCRIPTION	MATERIAL	MANF./SUPPLIER/REMARKS
1A	YE-169	1	FRAME HEAD	6063-T5	--
2A	YE-167	1	FRAME SILL	6063-T5	–
3A	YE-102	2	FRAME JAMB	6063-T5	–
4A	YE-152	1	FIXED RAIL	6063-T5	--
5A	YE-151	1	VENT TOP RAIL	6063-T5	–
6A	YE-168	1	VENT BOTTOM RAIL	6063-T5	–
7A	YE-92	2	VENT JAMB	6063-T5	–
8A	YB-4	AS REQD.	GLAZING BEAD	ALUMINUM	ROLL FORMED
10A	–	2/ VENT	BLOCK & TACKLE BALANCE	–	--
11A	YH-622	AS REQD.	BULB VINYL – SINGLE ROW	PVC	DUROMETER 75 SHORE A
13A	YH-509F	AS REQD.	PILE-SCHLEGEL .187 X .250	--	FIN SEAL (DOUBLE)
14A	YH-504	2/ VENT	VENT LATCHES	NYLON/CELCON	AT 11" FROM ENDS
14AA	YH-515	2/ VENT	CAM LOCKS	ZAMAK	AT 11" FROM ENDS
15A	#10 X 3/4"	8	FRAME ASSEMBLY SCREWS	CRS	PLATED, PH SMS
16A	#8 X 1"	2	FIXED RAIL SCREWS	CRS	CAD PLATED, PH SMS
17A	#8 X 1-1/4"	4/ VENT	VENT ASSEMBLY SCREWS	CRS	CAD PLATED, PH SMS
18A	YH-590	1	REINFORCING BAR (.625 X .312")	STEEL	–

SINGLE HUNG WINDOW INSERT FOR SINGLE (X) DOOR

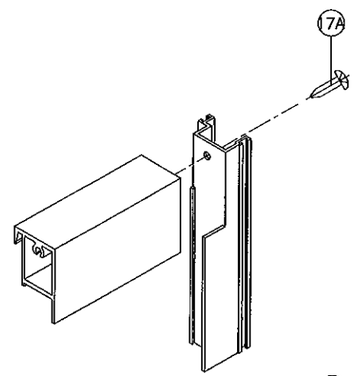

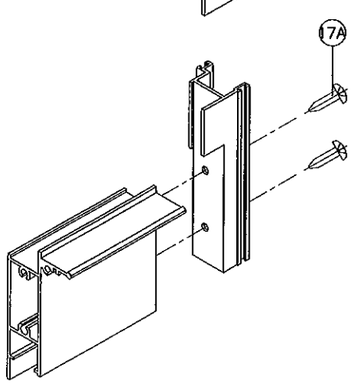

S.H. VENT CORNER DETAIL

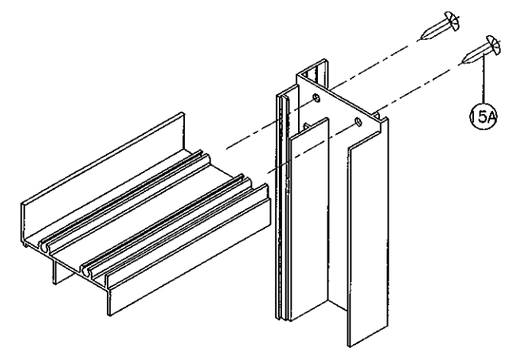

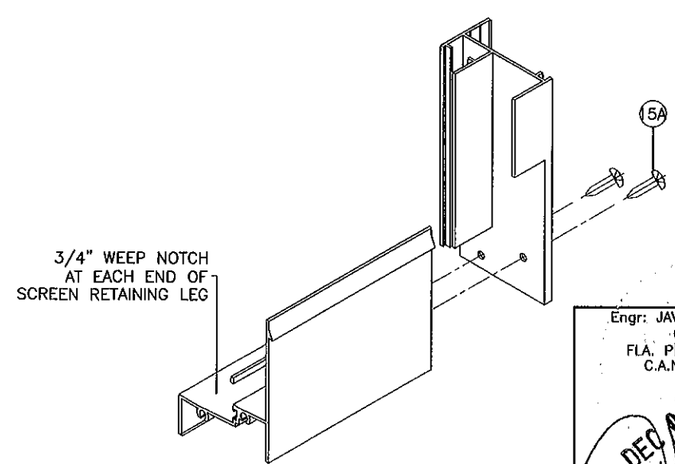

S.H. FRAME CORNER DETAIL

PRODUCT REVISED
as complying with the Florida
Building Code
Acceptance No. 11-1209.02
Expiration Date 1/3/17
By Shaq J. Lynk
Miami-Dade Product Control

Engr: JAVAD AHMAD
CIVIL
FLA. PE # 70592
C.A.N. 3538
DEC 08 2011

AL-FAROOQ CORPORATION
ENGINEERS & PRODUCT DEVELOPMENT
1235 S.W. 87 AVE
MIAMI, FLORIDA 33174
TEL. (305) 264-8100 FAX. (305) 262-6978
COMP-ANL\W01-64AWP

SERIES 1800 ALUM FRENCH DOOR W/ SIDELITES (L.M.I.)

TRULITE WINDOW & DOOR SOLUTIONS, LLC
8130 N.W. 74TH AVE.
MEDLEY, FL. 33166
TEL. (305) 887-2646 FAX. (305) 883-1309

revisions:

no	date	by	description
D	01.29.07		NO CHANGE THIS SHEET
E	02.03.09		GENERAL REVISION
F	09.02.10		MANUF. NAME REVISED
G	11.22.10		REV. PER BCCO COMMENTS
H	08.15.11		UPDATED FOR 2010 FBC

date: 09-17-01
scale: 3/8" = 1"
dr. by: HAMID
chk. by:

drawing no.
W01-64