MIAMI-DADE COUNTY
DEPARTMENT OF PERMITTING, ENVIRONMENT, AND REGULATORY AFFAIRS (PERA)
BOARD AND CODE ADMINISTRATION DIVISION

MIAMI–DADE COUNTY, FLORIDA
PRODUCT CONTROL SECTION
11805 SW 26 Street, Room 208
Miami, Florida 33175–2474
T (786) 315–2590 F (786) 315–2599
www.miamidade.gov/pera/

NOTICE OF ACCEPTANCE (NOA)

Atrium Companies, Inc.
9001 Ambassador Row
Dallas, TX 75247

SCOPE:

This NOA is being issued under the applicable rules and regulations governing the use of construction materials. The documentation submitted has been reviewed and accepted by Miami–Dade County PERA–Product Control Section to be used in Miami–Dade County and other areas where allowed by the Authority Having Jurisdiction (AHJ).

This NOA shall not be valid after the expiration date stated below. The Miami–Dade County Product Control Section (In Miami–Dade County) and/or the AHJ (in areas other than Miami–Dade County) reserve the right to have this product or material tested for quality assurance purposes. If this product or material fails to perform in the accepted manner, the manufacturer will incur the expense of such testing and the AHJ may immediately revoke, modify, or suspend the use of such product or material within their jurisdiction. PERA reserves the right to revoke this acceptance, if it is determined by Miami–Dade County Product Control Section that this product or material fails to meet the requirements of the applicable building code.

This product is approved as described herein, and has been designed to comply with the Florida Building Code, including the High Velocity Hurricane Zone.

DESCRIPTION: Series "MSH/ M40–50 XHP" Aluminum Single Hung Window – N. I.

APPROVAL DOCUMENT: Drawing No. **ATR029**, titled Series "MSH/ M40–50 XHP Al. Single–Hung Windows", sheets 1 through 10 of 10, dated 11/12/11 with the latest revision dated 04/07/12, prepared by Building Drops, Inc., signed and sealed by Alexis Spyrou, P. E., bearing the Miami–Dade County Product Control Section stamp with the Notice of Acceptance number and expiration date by the Miami–Dade County Product Control Section.

MISSILE IMPACT RATING: None.

LABELING: Each unit shall bear a permanent label with the manufacturer's name or logo, city, state, model/series, and following statement: "Miami–Dade County Product Control Approved", unless otherwise noted herein.

RENEWAL of this NOA shall be considered after a renewal application has been filed and there has been no change in the applicable building code negatively affecting the performance of this product.

TERMINATION of this NOA will occur after the expiration date or if there has been a revision or change in the materials, use, and/ or manufacture of the product or process. Misuse of this NOA as an endorsement of any product, for sales, advertising or any other purposes shall automatically terminate this NOA. Failure to comply with any section of this NOA shall be cause for termination and removal of NOA.

ADVERTISEMENT: The NOA number preceded by the words Miami–Dade County, Florida, and followed by the expiration date may be displayed in advertising literature. If any portion of the NOA is displayed, then it shall be done in its entirety.

INSPECTION: A copy of this entire NOA shall be provided to the user by the manufacturer or its distributors and shall be available for inspection at the job site at the request of the Building Official.

This NOA **renews and revises NOA No. 06–0413.06** and consists of this page 1, evidence pages E–1 and E–2, as well as approval document mentioned above.

The submitted documentation was reviewed by **Jaime D. Gascon, P. E.**

MIAMI-DADE COUNTY APPROVED

J. Gascon 4/18/12

NOA No. 11–1212.01
Expiration Date: April 29, 2014
Approval Date: April 26, 2012

Atrium Companies, Inc.

NOTICE OF ACCEPTANCE: EVIDENCE SUBMITTED

A. DRAWINGS

1. Manufacturer's die drawings and sections.
   (Submitted under previous NOA's No.'s 04–0204.05 and 06–0413.06)
2. Drawing No. **ATR029**, titled Series "MSH/ M40–50 XHP Al. Single – Hung Windows", sheets 1 through 10 of 10, dated 11/12/11 with the latest revision dated 04/07/12, prepared by Building Drops, Inc., signed and sealed by Alexis Spyrou, P. E.

B. TESTS

1. Test reports on: 1) Air Infiltration Test, per FBC, TAS 202–94
   2) Uniform Static Air Pressure Test, Loading per FBC, TAS 202–94
   3) Water Resistance Test, per FBC, TAS 202–94
   4) Forced Entry Test, Type "A–A" vertical sliding window, Grade 10, Level LV 1 per ASTM F 588–07 and per FBC 2411 3.2.1 (b), TAS 202–94

   along with marked–up drawings and installation diagram of aluminum single hung window, prepared by Architectural Testing, Inc., Test Report No. **ATI–B3171–801–44**, dated 10/20/11, signed and sealed by Joseph A. Reed, P. E.
2. Test reports on: 1) Air Infiltration Test, per FBC, TAS 202–94
   2) Uniform Static Air Pressure Test, Loading per FBC, TAS 202–94
   3) Water Resistance Test, per FBC, TAS 202–94

   along with marked–up drawings and installation diagram of aluminum single hung window, prepared by Certified Testing Laboratories, Inc., Test Report No. **CTLA–1996–W–3**, dated 05/13/11, signed and sealed by Ramesh C. Patel, P. E.
3. Test reports on: 1) Air Infiltration Test, per FBC, TAS 202–94
   2) Uniform Static Air Pressure Test, Loading per FBC, TAS 202–94
   3) Water Resistance Test, per FBC, TAS 202–94
   4) Forced Entry Test, per FBC 2411.3.2.1 (b) TAS 202–94

   along with marked–up drawings and installation diagram of aluminum single hung window, prepared by Certified Testing Laboratories–Architectural, Inc., Test Report No. **CTLA–1506–W,** dated 03/06/06, signed and sealed by Ramesh C. Patel, P. E.
   (Submitted under previous NOA No. 06–0413.06)
4. Test reports on: 1) Air Infiltration Test, per FBC, TAS 202–94
   2) Uniform Static Air Pressure Test, Loading per FBC, TAS 202–94
   3) Water Resistance Test, per FBC, TAS 202–94
   4) Forced Entry Test, per FBC 2411.3.2.1 (b) TAS 202–94

   along with marked–up drawings and installation diagram of aluminum single hung window, prepared by Certified Testing Laboratories–Architectural, Inc., Test Reports No.'s **CTLA–1182–W** and **CTLA–1182–W–R**, dated 10/28/03 and 01/20/04, both signed and sealed by Ramesh Patel, P. E.
   (Submitted under previous NOA No. 04–0204.05)

Jaime D. Gascon, P. E.
Product Control Section Supervisor
NOA No. 11–1212.01
Expiration Date: April 29, 2014
Approval Date: April 26, 2012

NOTICE OF ACCEPTANCE: EVIDENCE SUBMITTED

C. CALCULATIONS

1. Anchor verification calculations and structural analysis, complying with FBC–2007 and FBC–2010, dated 11/12/11, prepared by Building Drops, Inc., dated 04/04/12, signed and sealed by Alexis Spyrou, P. E.
2. Glazing complies with ASTM E1300–04

D. QUALITY ASSURANCE

1. Miami–Dade Department of Permitting, Environment, and Regulatory Affairs (PERA).

E. MATERIAL CERTIFICATIONS

1. None.

F. STATEMENTS

1. Statement letter of no financial interest, conformance and complying with FBC–2010, issued by Building Drops, Inc., dated 10/28/11, signed and sealed by Alexis Spyrou, P. E.
2. Proposal No. **09–1641** issued by Product Control, dated 12/23/09, signed by Manuel Perez, P. E.
3. Laboratory compliance letter for Test Report No. **ATI–B3171.01–801–44**, issued by Architectural Testing, Inc., dated 10/20/11, signed and sealed by Joseph A. Reed, P. E.
4. Laboratory compliance letter for Test Report No. **CTLA–1996–W–3**, issued by Certified Testing Laboratories, Inc., dated 05/13/11, signed and sealed by Ramesh C. Patel, P. E.
5. Asset purchase agreement, dated November 20, 2006, signed by Ms. Heather A. Morschauser.
   (Submitted under previous NOA No. 06–0413.06)
6. Laboratory compliance letters for Test Reports No.'s **CTLA–1182–W**, **CTLA–1182–W–R**, and **CTLA–1506–W**, issued by Certified Testing Laboratories – Architectural, Inc., dated 10/28/03, 01/20/04 and 03/06/06, all signed and sealed by Ramesh C. Patel, P. E.
   (Submitted under previous NOA's No.'s 04–0204.05 and 06–0413.06)

G. OTHERS

1. Notice of Acceptance No. **06–0413.06**, issued to Kinco Windows & Doors, for their "M40 XHP Alum Single Hung Window (N.I.)", approved on 04/25/06 and expiring on 04/29/09.

Jaime D. Gascon, P. E.
Product Control Section Supervisor
NOA No. 11–1212.01
Expiration Date: April 29, 2014
Approval Date: April 26, 2012

ATRIUM COMPANIES, INC.

MSH/M40-50 XHP ALUMINUM SINGLE HUNG WINDOWS (NON-IMPACT)

INSTALLATION NOTES:

1. ONE (1) INSTALLATION ANCHOR IS REQUIRED AT EACH ANCHOR LOCATION SHOWN.
2. THE NUMBER OF INSTALLATION ANCHORS DEPICTED IS THE MINIMUM NUMBER OF ANCHORS TO BE USED FOR PRODUCT INSTALLATION OF THE MAXIMUM SIZE LISTED.
3. INSTALL INDIVIDUAL INSTALLATION ANCHORS WITHIN A TOLERANCE OF ±1/16 INCH BASED ON QUANTITIES IN DP CHARTS NOT TO EXCEED THE DEPICTED LOCATION & SPACING IN THE ANCHOR LAYOUT DETAILS (I.E., WITHOUT CONSIDERATION OF TOLERANCES). TOLERANCES ARE NOT CUMULATIVE FROM ONE INSTALLATION ANCHOR TO THE NEXT.
4. SHIM AS REQUIRED AT EACH INSTALLATION ANCHOR WITH LOAD BEARING SHIM(S). MAXIMUM ALLOWABLE SHIM STACK TO BE 1/4 INCH. SHIM WHERE SPACE OF 1/16 INCH OR GREATER OCCURS. SHIM(S) SHALL BE CONSTRUCTED OF HIGH DENSITY PLASTIC OR BETTER.
5. **THROUGH FRAME:** FOR INSTALLATION INTO WOOD FRAMING USE #14 WOOD SCREWS OF SUFFICIENT LENGTH TO ACHIEVE 1 1/2 INCH MINIMUM EMBEDMENT INTO WOOD SUBSTRATE.
6. **THROUGH FRAME:** FOR INSTALLATION THROUGH 1X BUCK TO CONCRETE/MASONRY, OR DIRECTLY INTO CONCRETE/MASONRY, USE 1/4 INCH DIAMETER ELCO ULTRACONS OF SUFFICIENT LENGTH TO ACHIEVE 1 1/4 INCH MINIMUM EMBEDMENT.
7. **THROUGH FRAME:** FOR INSTALLATION INTO METAL STUD USE 1/4-14 ITW TEK SELECT, 1/4-20 DRIL-FLEX SAE GR. 5 BY ELCO, OR 1/4-20 SAE GR. 5 KWIK-FLEX BY HILTI SELF DRILLING SCREWS OF SUFFICIENT LENGTH TO ACHIEVE A MINIMUM OF 3 THREADS PENETRATION BEYOND METAL FRAME SUBSTRATE.
8. **NAIL FIN:** FOR INSTALLATION INTO WOOD FRAMING USE #10 WOOD SCREWS OF SUFFICIENT LENGTH TO ACHIEVE 1 1/2 INCH MINIMUM EMBEDMENT INTO WOOD SUBSTRATE.
9. **NAIL FIN:** FOR INSTALLATION INTO METAL STUD USE #10-16 ELCO DRIL-FLEX SAE GR. 5 OR #10-16 HILTI KWIK-FLEX SAE GR. 5 SELF DRILLING SCREWS OF SUFFICIENT LENGTH TO ACHIEVE A MINIMUM OF 3 THREADS PENETRATION BEYOND METAL FRAME SUBSTRATE.
10. MINIMUM EMBEDMENT AND EDGE DISTANCE EXCLUDE WALL FINISHES, INCLUDING BUT NOT LIMITED TO STUCCO, FOAM, BRICK VENEER, AND SIDING.
11. INSTALLATION ANCHORS AND ASSOCIATED HARDWARE MUST BE MADE OF CORROSION RESISTANT MATERIAL OR HAVE A CORROSION RESISTANT COATING.
12. FOR HOLLOW BLOCK AND GROUT FILLED BLOCK, DO NOT INSTALL INSTALLATION ANCHORS INTO MORTAR JOINTS. EDGE DISTANCE IS MEASURED FROM FREE EDGE OF BLOCK OR EDGE OF MORTAR JOINT INTO FACE SHELL OF BLOCK.
13. INSTALLATION ANCHORS SHALL BE INSTALLED IN ACCORDANCE WITH ANCHOR MANUFACTURER'S INSTALLATION INSTRUCTIONS, AND ANCHORS SHALL NOT BE USED IN SUBSTRATES WITH STRENGTHS LESS THAN THE MINIMUM STRENGTH SPECIFIED BY THE ANCHOR MANUFACTURER.
14. INSTALLATION ANCHOR CAPACITIES FOR PRODUCTS HEREIN ARE BASED ON SUBSTRATE MATERIALS WITH THE FOLLOWING PROPERTIES:
    A. WOOD - MINIMUM SPECIFIC GRAVITY OF 0.55.
    B. CONCRETE -MINIMUM COMPRESSIVE STRENGTH OF 2730 PSI.
    C. GROUT-FILLED CMU- UNIT STRENGTH CONFORMS TO ASTM C-90 WITH MINIMUM COMPRESSIVE STRENGTH OF 1924 PSI AND GROUT CONFORMS TO ASTM C 476, MINIMUM GROUT COMPRESSIVE STRENGTH OF 2000 PSI.
    D. HOLLOW BLOCK CMU - UNIT STRENGTH CONFORMS TO ASTM C-90 WITH MINIMUM COMPRESSIVE STRENGTH OF 1924 PSI.
    E. STEEL - MINIMUM YIELD STRENGTH OF 36 KSI. MINIMUM WALL THICKNESS OF 59.8 MIL (0.0598" or 16 GAUGE), MIN. 1/2" EDGE DISTANCE.
    F. ALUMINUM - MINIMUM ALLOY 6063-T5. MINIMUM WALL THICKNESS OF 1/8" (0.125"). MIN. 1/2" EDGE DISTANCE

GENERAL NOTES:

1. THE PRODUCT SHOWN HEREIN IS DESIGNED AND MANUFACTURED TO COMPLY WITH THE 2007 & 2010 FLORIDA BUILDING CODE (FBC), INCLUDING HVHZ AND HAS BEEN EVALUATED ACCORDING TO THE FOLLOWING:
    - TAS 202-94
2. ADEQUACY OF THE EXISTING STRUCTURAL CONCRETE/MASONRY AND 2X FRAMING AS A MAIN WIND FORCE RESISTING SYSTEM CAPABLE OF WITHSTANDING AND TRANSFERRING APPLIED PRODUCT LOADS TO THE FOUNDATION IS THE RESPONSIBILITY OF THE ENGINEER OR ARCHITECT OF RECORD FOR THE PROJECT OF INSTALLATION.
3. 1X AND 2X BUCKS (WHEN USED) SHALL BE DESIGNED AND ANCHORED TO PROPERLY TRANSFER ALL LOADS TO THE STRUCTURE. BUCK DESIGN AND INSTALLATION IS THE RESPONSIBILITY OF THE ENGINEER OR ARCHITECT OF RECORD FOR THE PROJECT OF INSTALLATION.
4. THE INSTALLATION DETAILS DESCRIBED HEREIN ARE GENERIC AND MAY NOT REFLECT ACTUAL CONDITIONS FOR A SPECIFIC SITE. IF SITE CONDITIONS CAUSE INSTALLATION TO DEVIATE FROM THE REQUIREMENTS DETAILED HEREIN, A LICENSED ENGINEER OR ARCHITECT SHALL PREPARE SITE SPECIFIC DOCUMENTS FOR USE WITH THIS DOCUMENT IN NON-HVHZ AREAS. IN HVHZ AREAS, ONE TIME PRODUCT APPROVAL TO BE OBTAINED FROM MIAMI-DADE PERA.
5. APPROVED IMPACT PROTECTIVE SYSTEM **IS REQUIRED** ON THIS PRODUCT IN AREAS REQUIRING IMPACT RESISTANCE.
6. WINDOW FRAME MATERIAL: ALUMINUM 6063-T6
7. GLASS MEETS THE REQUIREMENTS OF ASTM E 1300-04 GLASS CHARTS. SEE SHEET 5 & 6 FOR GLAZING DETAILS.
8. IN ACCORDANCE WITH THE 2007 & 2010 FBC SEC. 2003.8.4 DISSIMILAR METALS INCLUDING FASTENERS THAT MAY COME INTO CONTACT WITH ALUMINUM UNIT FRAMING SHALL BE PROTECTED AS DEFINED IN SEC 2003.8

TABLE OF CONTENTS

SHEET	REVISION	SHEET DESCRIPTION
1	-	INSTALLATION & GENERAL NOTES
2	-	ELEVATION & ANCHOR LAYOUTS
3	-	VERTICAL SECTIONS
4	-	HORIZONTAL SECTIONS
5	-	EQUAL LITE, STANDARD SIZE DESIGN PRESSURE TABLES & GLAZING OPTIONS A
6	-	UNEQUAL LITE, STANDARD SIZE DESIGN PRESSURE TABLES & GLAZING OPTIONS B
7	-	EQUAL LITE, INCREMENTAL SIZE DESIGN PRESSURE TABLES
8	-	UNEQUAL LITE, INCREMENTAL SIZE DESIGN PRESSURE TABLES
9	-	COMPONENTS & BILL OF MATERIALS
10	-	CORNER SECTION ASSEMBLIES

MISSILE IMPACT RATING
NON-IMPACT

ATRIUM COMPANIES, INC.
9001 AMBASSADOR ROW
DALLAS, TEXAS 75247
PH: (214) 637-2696 FX: (214) 424-6734

TITLE: MSH/M40-50 XHP AL. SINGLE-HUNG WINDOWS INSTALLATION & GENERAL NOTES

PREPARED BY:
BUILDING DROPS, INC.
127 W. FAIRBANKS AVE., STE. 438
WINTER PARK, FL 32789
PH: (407) 644-6957 FX: (407) 644-2366

REVISIONS

NO.	DESCRIPTION	BY	DATE

ALEXIS SPYROU
FLORIDA P.E. NO. 68701
127 W. FAIRBANKS AVE, STE 438
WINTER PARK, FL 32789
FBPE CERT. OF AUTHORIZATION NO. 28578

PRODUCT RENEWED
as complying with the Florida
Building Code 11-1212.01
Acceptance No
Expiration Date 04/29/2014
By
Miami Dade Product Control

DATE: 9.15.11
DWN BY: MSS
CHK BY: HFN
SCALE: NTS
DWG #: ATR029
SHEET: 1 OF 10

4/3/2012 6:22 PM

p:\projects\atrium companies, inc\msh-p-11-0931 (series msh\m40-50 xhp aluminum single hung)\dwgs\atr029.dwg

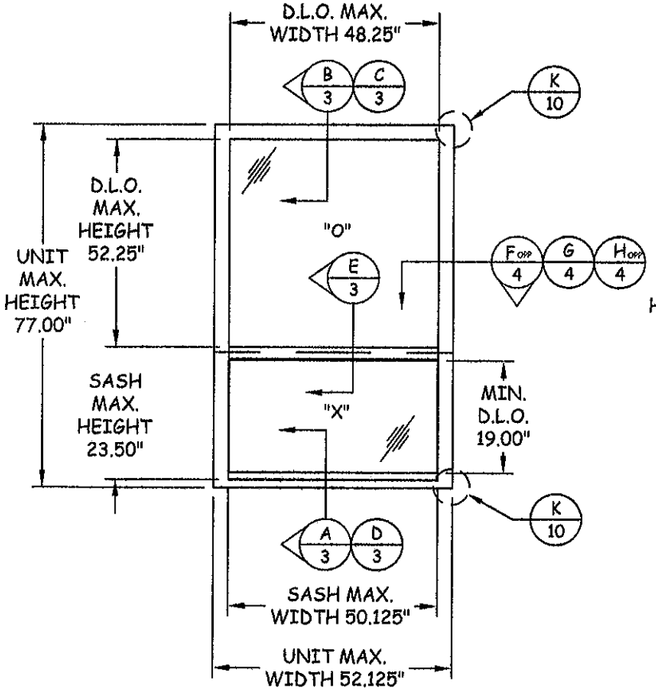

TYPICAL ELEVATION

FLANGE FRAME

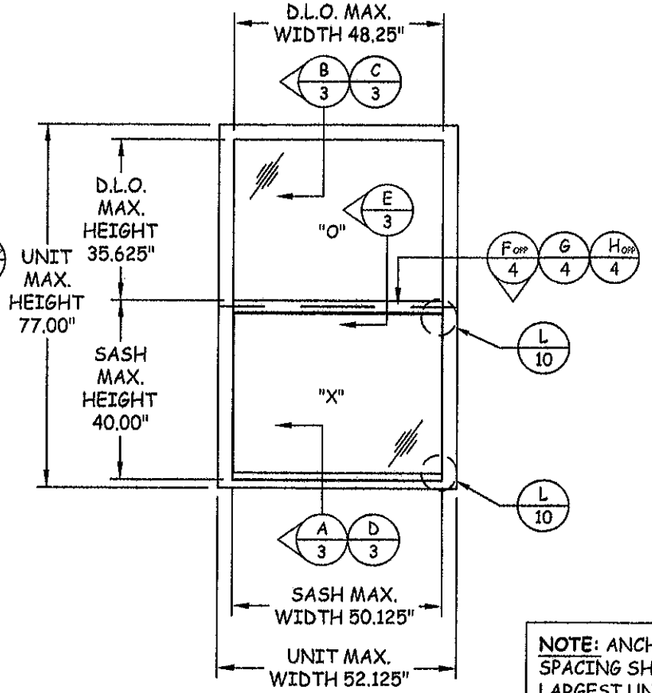

TYPICAL ELEVATION

FLANGE FRAME

NOTE: ANCHOR QUANTITY & SPACING SHOWN BELOW IS FOR LARGEST UNITS. REFER TO DP TABLES FOR REQUIRED ANCHOR QUANTITIES BASED ON UNIT SIZE WITH SPACING NOT TO EXCEED AS SHOWN.

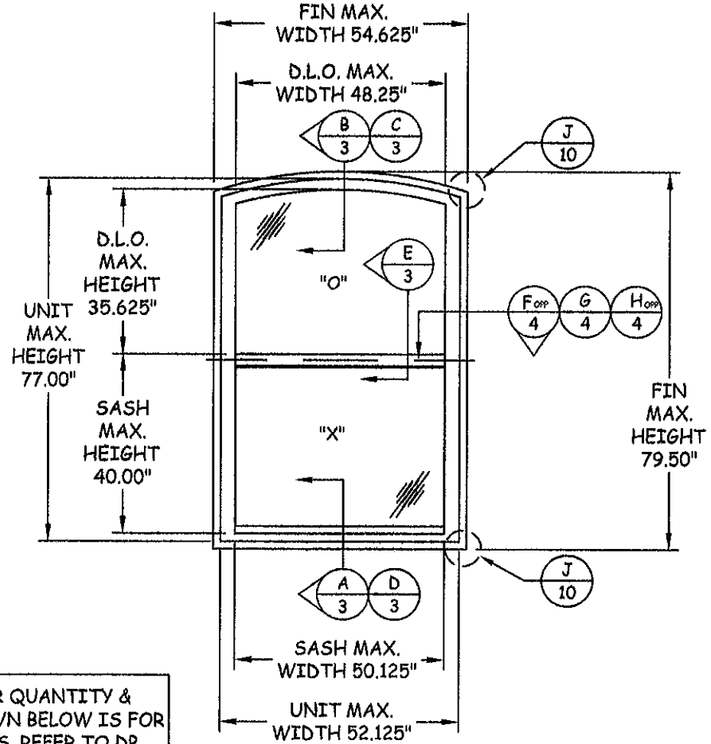

TYPICAL ELEVATION

FIN FRAME

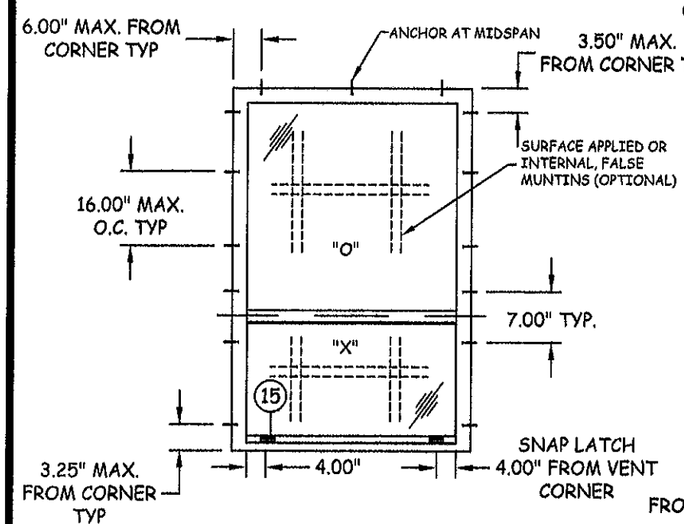

ANCHOR LAYOUT

FLANGE FRAME

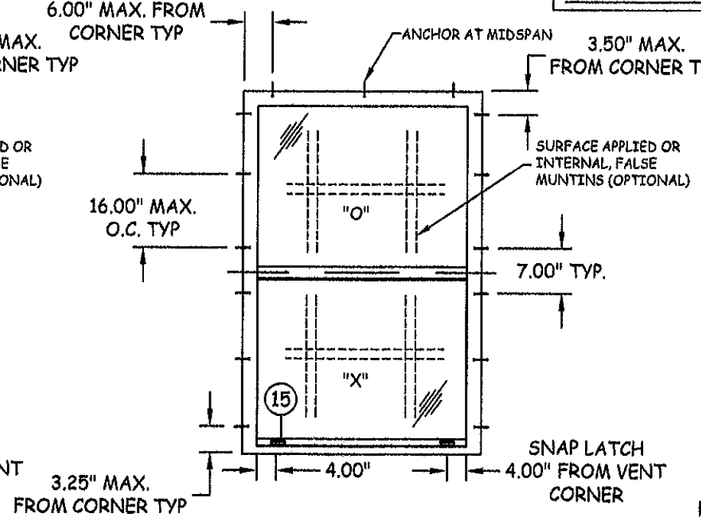

ANCHOR LAYOUT

FLANGE FRAME

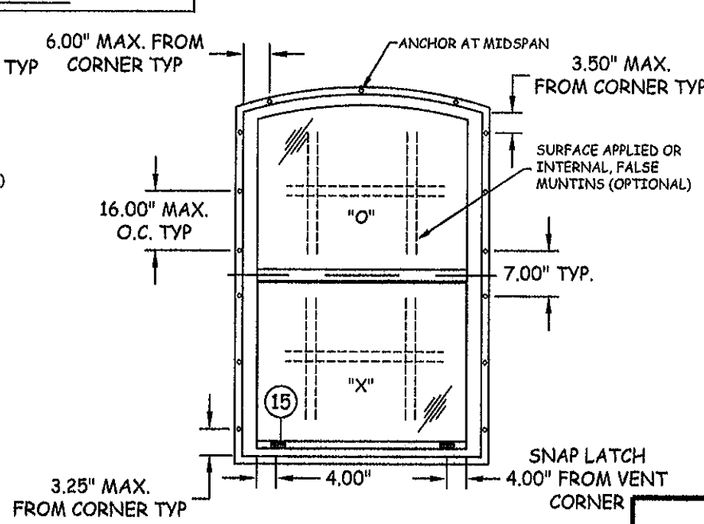

ANCHOR LAYOUT

FIN FRAME

PRODUCT RENEWED
as complying with the Florida
Building Code 11-1212.01
Acceptance No
Expiration Date 04/29/2014
By
Miami Dade Product Control

ATRIUM COMPANIES, INC.
9001 AMBASSADOR ROW
DALLAS, TEXAS 75247
PH: (214) 637-2696 FX: (214) 424-6734

TITLE: MSH/M40-50 XHP
AL. SINGLE-HUNG WINDOWS
ELEVATIONS &
ANCHOR LAYOUTS

PREPARED BY:
BUILDING DROPS, INC.
127 W. FAIRBANKS AVE., STE. 438
WINTER PARK, FL 32789
PH: (407) 644-6957 FX: (407) 644-2366

REVISIONS

NO.	DESCRIPTION	BY	DATE

4-7-12

ALEXIS SPYROU
FLORIDA P.E. NO. 68101
127 W. FAIRBANKS AVE., STE. 438
WINTER PARK, FL 32789
PEPE CERT. OF AUTHORIZATION NO. 28578

DATE: 9.15.11	DWN BY: MSS	CHK BY: HFN	SCALE: NTS

DWG #: ATR029

SHEET: 2 OF 10

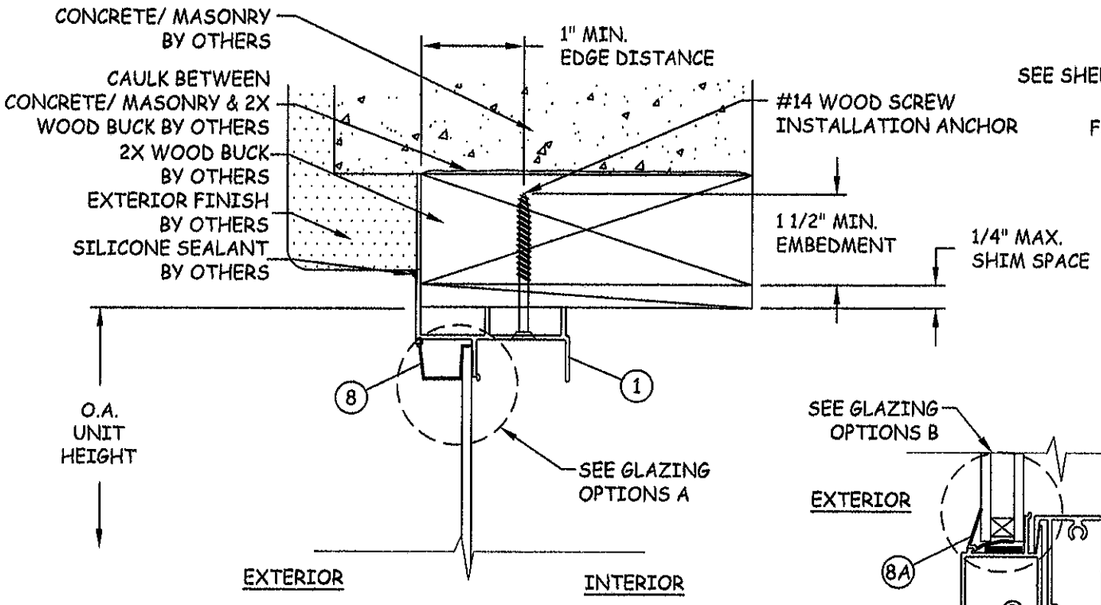

B/3 VERTICAL SECTION
HEAD - 2X WOOD BUCK
FLANGE FRAME INSTALLATION

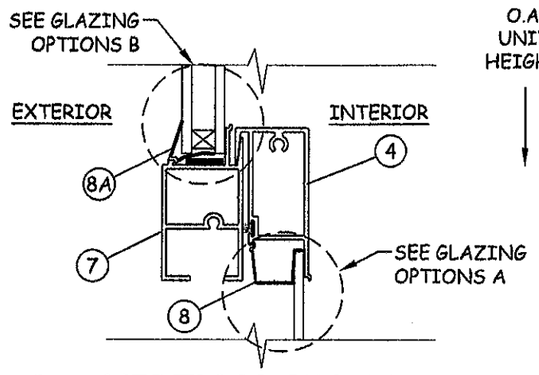

E/3 VERTICAL SECTION
MEETING RAIL

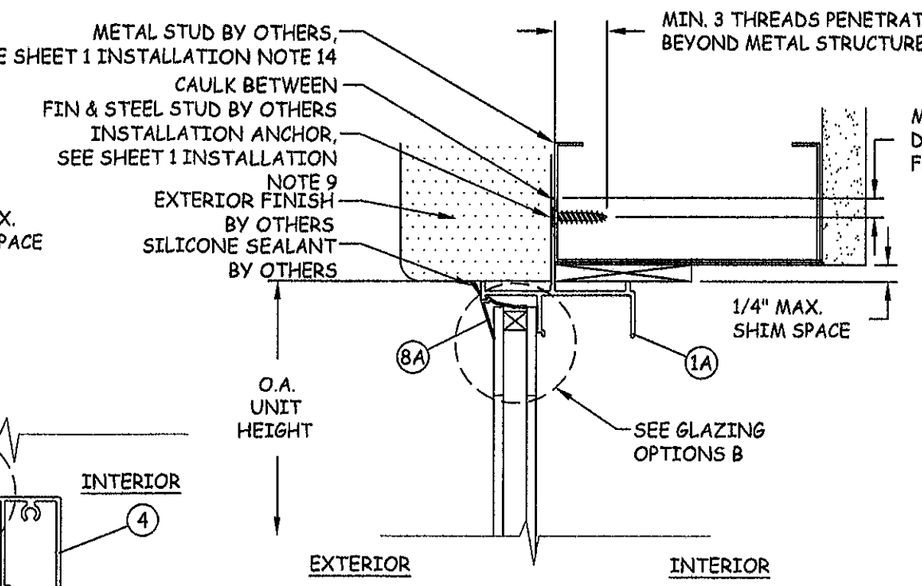

C/3 VERTICAL SECTION
HEAD-METAL STUD
FIN FRAME INSTALLATION

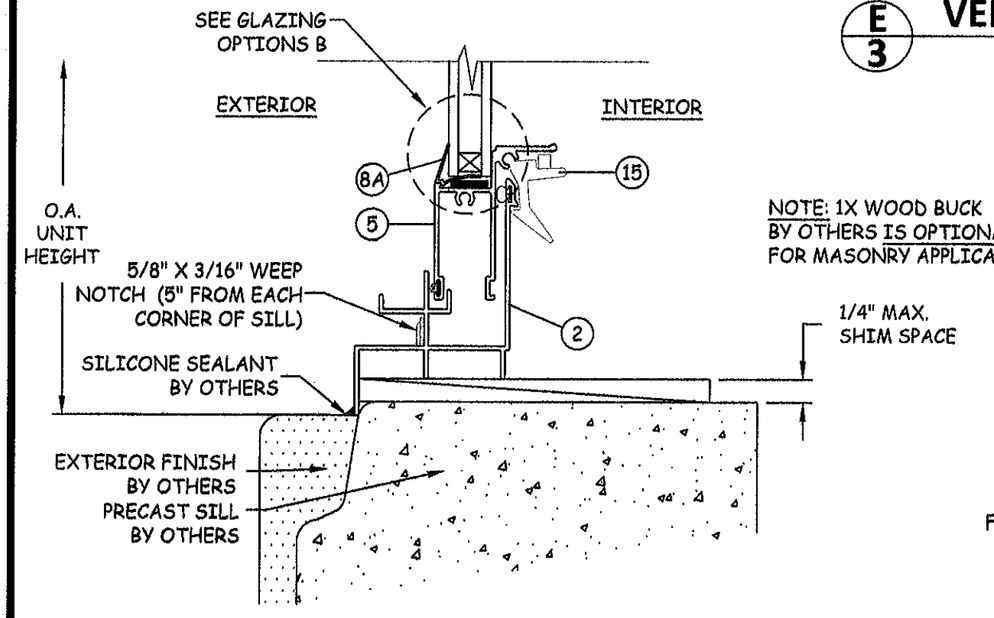

A/3 VERTICAL SECTION
SILL - CONCRETE/MASONRY
FLANGE FRAME INSTALLATION

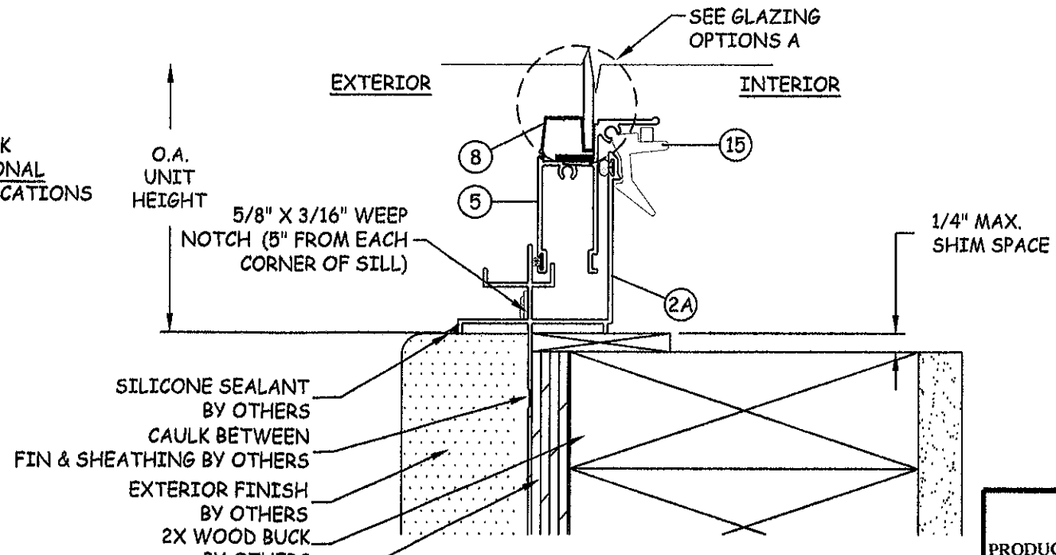

D/3 VERTICAL SECTION
SILL - 2X WOOD FRAME
FIN FRAME INSTALLATION

PRODUCT RENEWED
as complying with the Florida Building Code
Acceptance No 11-1212.01
Expiration Date 04/29/2014
By
Miami Dade Product Control

ATRIUM COMPANIES, INC.
9001 AMBASSADOR ROW
DALLAS, TEXAS 75247
PH: (214) 637-2696 FX: (214) 424-6734

TITLE: MSH/M40-50 XHP AL. SINGLE-HUNG WINDOWS VERTICAL SECTIONS

PREPARED BY:
BUILDING DROPS, INC.
127 W. FAIRBANKS AVE., STE. 438
WINTER PARK, FL 32789
PH: (407) 644-6957 FX: (407) 644-2366

REVISIONS

NO.	DESCRIPTION	BY	DATE

4-7-12

ALEXIS SPYROU
FLORIDA P.E. NO. 68101
127 W. FAIRBANKS AVE., STE. 438
WINTER PARK, FL 32789
FBPE CERT. OF AUTHORIZATION NO. 28978

DATE: 9.15.11 | DWN BY: MSS | CHK BY: HFN | SCALE: NTS

DWG #: ATR029

SHEET: 3 OF 10

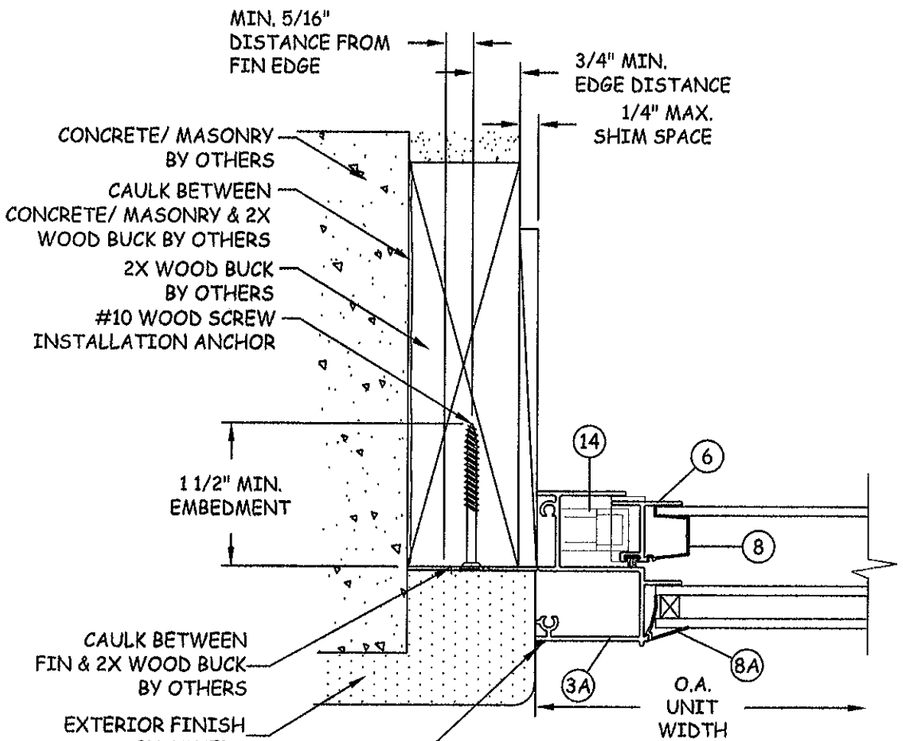

F/4 **HORIZONTAL SECTION**

JAMB - 2X WOOD BUCK
FIN FRAME INSTALLATION

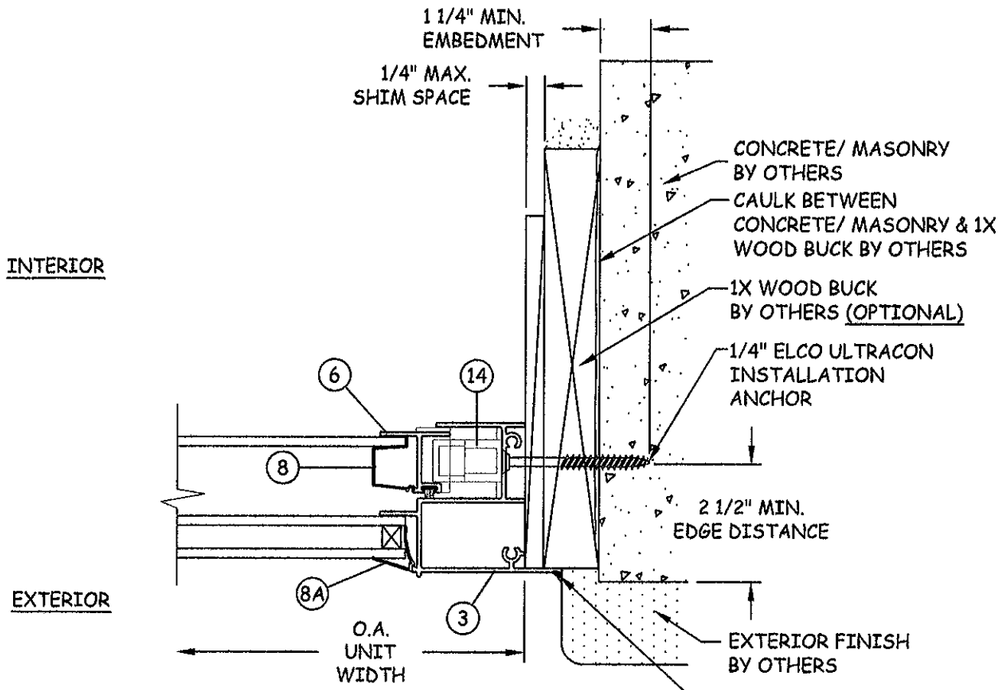

G/4 **HORIZONTAL SECTION**

JAMB - CONCRETE/MASONRY
FLANGE FRAME INSTALLATION

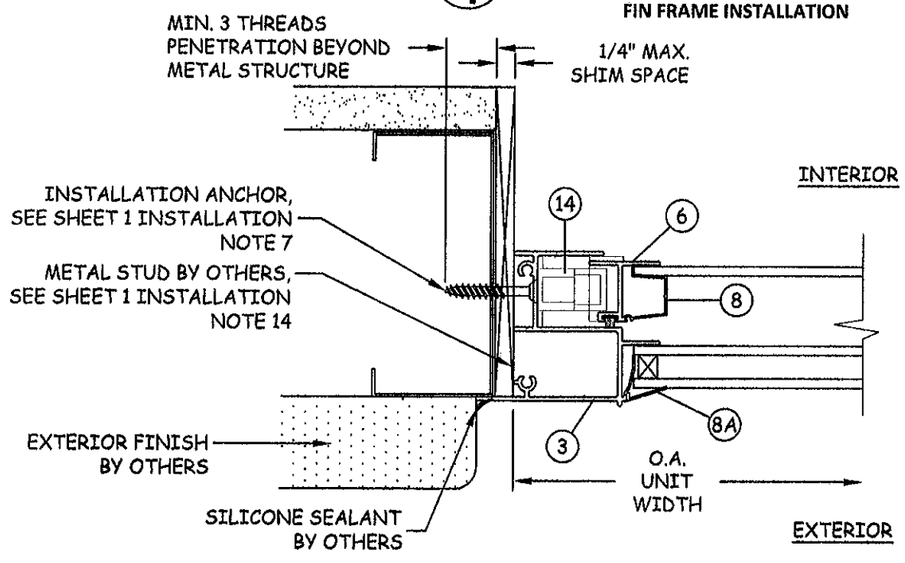

H/4 **HORIZONTAL SECTION**

JAMB-METAL STUD
FLANGE FRAME INSTALLATION

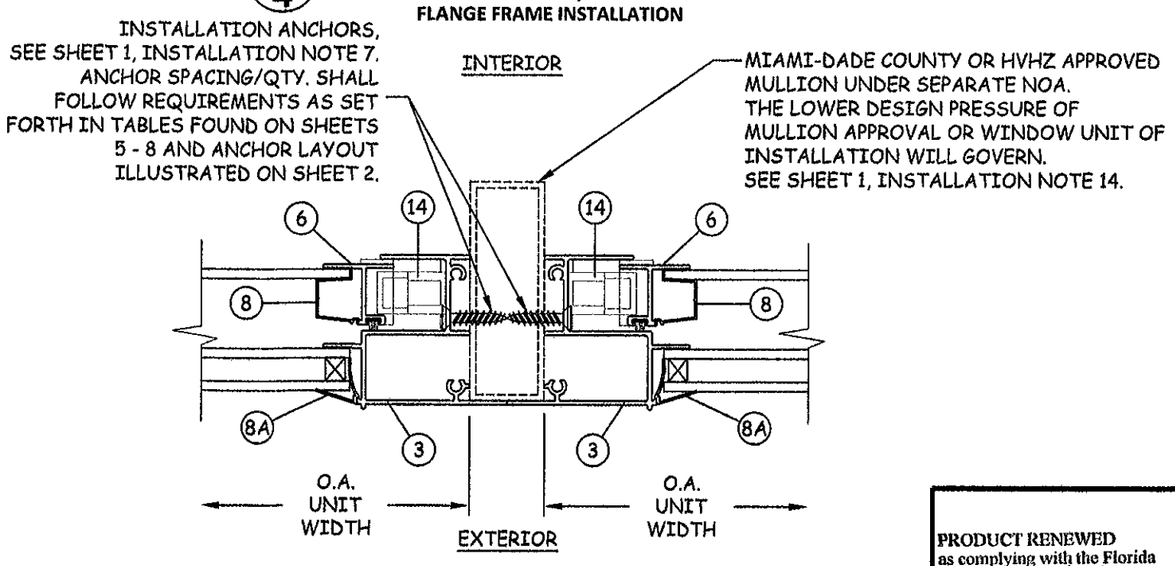

I/4 **HORIZONTAL SECTION**

JAMB-METAL TUBE MULLION
FLANGE FRAME INSTALLATION

PRODUCT RENEWED
as complying with the Florida
Building Code 11-1212.01
Acceptance No
Expiration Date 04/29/2014
By
Miami Dade Product Control

ATRIUM COMPANIES, INC.
9001 AMBASSADOR ROW
DALLAS, TEXAS 75247
PH: (214) 637-2696 FX: (214) 424-6734

TITLE: MSH/M40-50 XHP AL. SINGLE-HUNG WINDOWS HORIZONTAL SECTIONS

PREPARED BY:
BUILDING DROPS, INC.
127 W. FAIRBANKS AVE., STE. 438
WINTER PARK, FL 32789
PH: (407) 644-6957 FX: (407) 644-2366

REVISIONS

NO.	DESCRIPTION	BY	DATE

4 of 72

ALEXIS SPYROU
FLORIDA P.E. NO. 69101
127 W. FAIRBANKS AVE., STE. 438
WINTER PARK, FL 32789
REPRESENT. OF AUTHORIZATION NO. 29578

DATE: 9.15.11
DWN BY: MSS
CHK BY: HFN
SCALE: NTS

DWG #: ATR029

SHEET: 4 OF 10

EQUAL LITE SINGLE HUNG WINDOWS - DESIGN LOAD CAPACITY (PSF)																			
H (IN.)	W (IN.)	No. of Fastners per Jamb	1/8" ANN.		3/16" ANN.		1/4" ANN.		1/8" TEMP.		3/16" TEMP.		1/4" TEMP.		5/8" OA I.G. (A)		5/8" OA I.G. (T)	
			POS	NEG	POS	NEG	POS	NEG	POS	NEG	POS	NEG	POS	NEG	POS	NEG	POS	NEG
25.000	18.125	4	68.3	209.0	68.3	209.0	68.3	209.0	68.3	209.0	68.3	209.0	68.3	209.0	55.5	209.0	55.5	209.0
	25.500	4	68.3	201.0	68.3	209.0	68.3	209.0	68.3	209.0	68.3	209.0	68.3	209.0	55.5	209.0	55.5	209.0
	36.000	4	68.3	153.2	68.3	153.2	68.3	205.3	68.3	170.2	68.3	205.3	68.3	205.3	55.5	204.2	55.5	205.3
	52.125	4	68.3	99.3	68.3	99.3	68.3	141.8	68.3	110.4	68.3	141.8	68.3	141.8	55.5	132.4	55.5	141.8
37.375	18.125	4	68.3	181.0	68.3	209.0	68.3	209.0	68.3	209.0	68.3	209.0	68.3	209.0	55.5	209.0	55.5	209.0
	25.500	4	68.3	124.0	68.3	188.6	68.3	193.9	68.3	193.9	68.3	193.9	68.3	193.9	55.5	193.9	55.5	193.9
	36.000	4	68.3	78.7	68.3	114.3	68.3	137.3	68.3	127.0	68.3	137.3	68.3	137.3	55.5	137.3	55.5	137.3
	52.125	4	55.8	55.8	68.3	71.2	68.3	94.8	68.3	79.2	68.3	94.8	68.3	94.8	55.5	94.8	55.5	94.8
	52.125	6	-	-	-	-	-	-	-	-	68.3	110.8	68.3	126.7	55.5	95.0	55.5	126.7
49.625	18.125	6	68.3	129.0	68.3	209.0	68.3	209.0	68.3	209.0	68.3	209.0	68.3	209.0	55.5	209.0	55.5	209.0
	25.500	6	68.3	101.0	68.3	175.3	68.3	209.0	68.3	194.8	68.3	209.0	68.3	209.0	55.5	209.0	55.5	209.0
	36.000	6	68.3	70.9	68.3	97.3	68.3	140.5	68.3	108.1	68.3	151.3	68.3	155.1	55.5	129.7	55.5	155.1
	52.125	6	41.5	41.5	57.8	57.8	68.3	83.5	64.2	64.2	68.3	89.9	68.3	102.7	55.5	77.1	55.5	102.7
	52.125	8	-	-	-	-	-	-	-	-	-	-	68.3	102.7	-	-	55.5	102.7
54.875	18.125	6	68.3	113.0	68.3	209.0	68.3	209.0	68.3	209.0	68.3	209.0	68.3	209.0	55.5	209.0	55.5	209.0
	25.500	6	68.3	91.7	68.3	157.0	68.3	198.1	68.3	194.6	68.3	198.1	68.3	198.1	55.5	198.1	55.5	198.1
	36.000	6	67.5	67.5	68.3	93.2	68.3	134.6	68.3	103.5	68.3	140.3	68.3	140.3	55.5	124.2	55.5	140.3
	52.125	6	41.5	41.5	54.0	54.0	68.3	78.1	60.1	60.1	68.3	84.1	68.3	96.1	55.5	72.1	55.5	96.1
	52.125	8	-	-	-	-	-	-	-	-	-	-	68.3	96.1	-	-	55.5	96.1
62.000	18.125	6	68.3	96.5	68.3	209.0	68.3	209.0	68.3	209.0	68.3	209.0	68.3	209.0	55.5	209.0	55.5	209.0
	25.500	6	68.3	81.0	68.3	138.0	68.3	175.3	68.3	175.3	68.3	175.3	68.3	175.3	55.5	175.3	55.5	175.3
	36.000	6	61.7	61.7	68.3	89.6	68.3	124.2	68.3	99.6	68.3	124.2	68.3	124.2	55.5	119.5	55.5	124.2
	52.125	6	41.3	41.3	50.2	50.2	68.3	72.5	55.7	55.7	68.3	78.0	68.3	85.8	55.5	66.9	55.5	85.8
	52.125	8	-	-	-	-	-	-	-	-	68.3	78.0	68.3	89.2	-	-	55.5	89.2
71.000	18.125	6	68.3	82.7	68.3	196.0	68.3	209.0	68.3	209.0	68.3	209.0	68.3	209.0	55.5	209.0	55.5	209.0
	25.500	6	68.3	70.1	68.3	118.0	68.3	153.1	68.3	153.1	68.3	153.1	68.3	153.1	55.5	153.1	55.5	153.1
	36.000	6	55.5	55.5	68.3	87.9	68.3	108.4	68.3	97.7	68.3	108.4	68.3	108.4	55.5	108.4	55.5	108.4
	52.125	6	39.0	39.0	46.7	46.7	67.4	67.4	51.9	51.9	68.3	72.6	68.3	74.9	55.5	62.2	55.5	74.9
	52.125	8	-	-	-	-	67.4	67.4	-	-	68.3	72.6	68.3	83.0	-	-	55.5	83.0
77.000	18.125	6	68.3	78.9	68.3	187.0	68.3	198.6	68.3	198.6	68.3	198.6	68.3	198.6	55.5	198.6	55.5	198.6
	25.500	6	62.1	62.1	68.3	107.0	68.3	141.2	68.3	141.2	68.3	141.2	68.3	141.2	55.5	141.2	55.5	141.2
	36.000	6	51.3	51.3	68.3	82.2	68.3	100.0	68.3	97.7	68.3	100.0	68.3	100.0	55.5	100.0	55.5	100.0
	52.125	6	36.6	36.6	45.0	45.0	65.0	65.0	50.0	50.0	68.3	69.1	68.3	69.1	55.5	60.0	55.5	69.1
	52.125	8	-	-	-	-	65.0	65.0	-	-	68.3	70.0	68.3	80.0	-	-	55.5	80.0

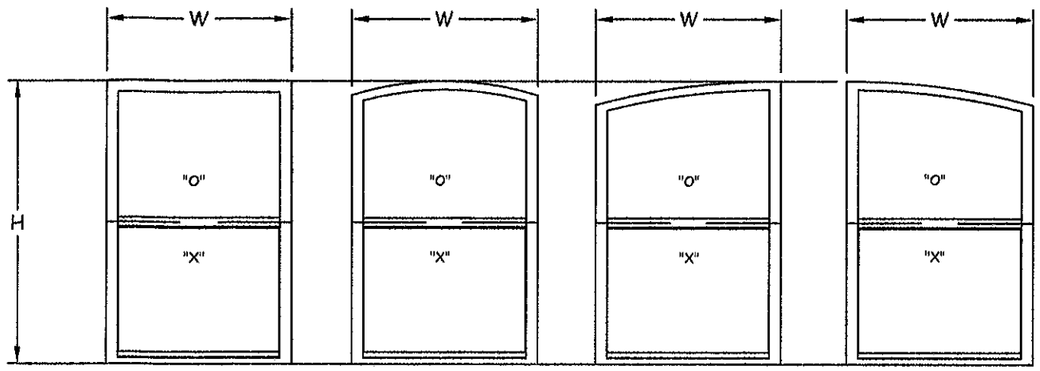

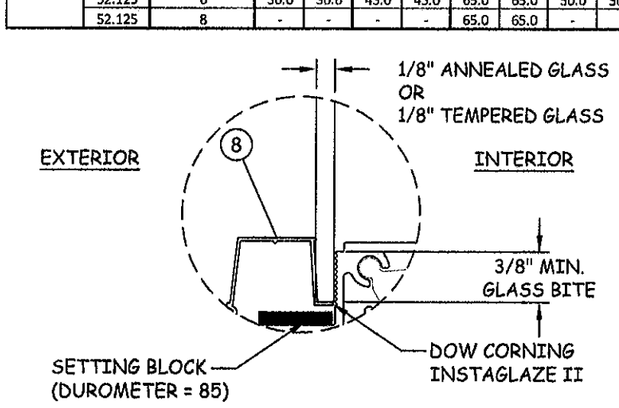

GLAZING DETAIL A1

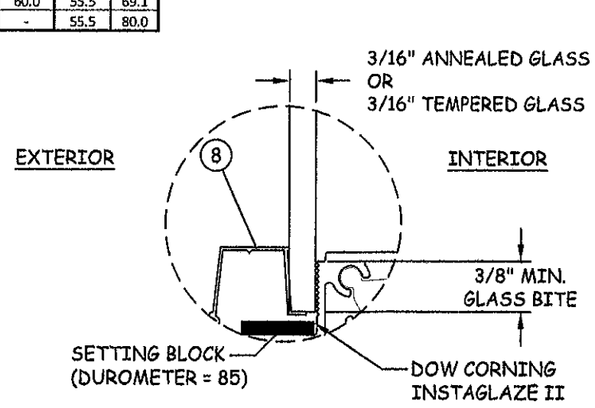

GLAZING DETAIL A2

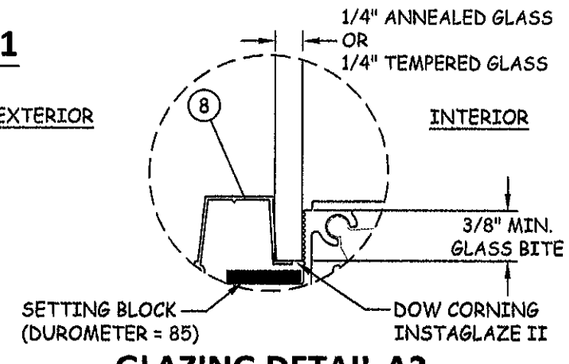

GLAZING DETAIL A3

GLAZING NOTES:

1) **ALL GLAZING LOAD RESISTANCE CAPACITIES HEREIN COMPLY WITH ASTM E 1300-04.**

GLAZING OPTIONS A

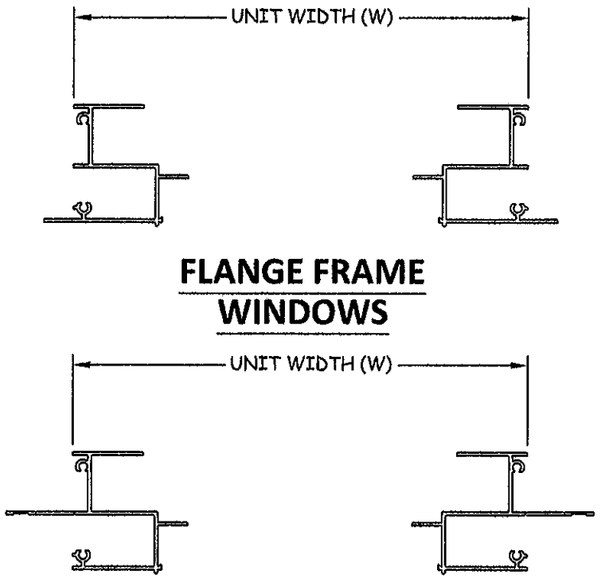

FLANGE FRAME WINDOWS

FIN FRAME WINDOWS

PRODUCT RENEWED
as complying with the Florida
Building Code
Acceptance No 11-1212.01
Expiration Date 04/29/2014
By
Miami Dade Product Control

ATRIUM COMPANIES, INC.
9001 AMBASSADOR ROW
DALLAS, TEXAS 75247
PH: (214) 637-2696 FX: (214) 424-6734

TITLE: MSH/M40-50 XHP
AL. SINGLE-HUNG WINDOWS
EQUAL LITE, STANDARD SIZE DP TABLES & GLAZING OPTIONS A

PREPARED BY:
BUILDING DROPS, INC.
127 W. FAIRBANKS AVE., STE. 438
WINTER PARK, FL 32789
PH: (407) 644-6957 FX: (407) 644-2366

REVISIONS

NO.	DESCRIPTION	BY	DATE

ALEXIS SEPTIEN
FLORIDA P.E. NO. 68101
127 W. FAIRBANKS AVE., STE. 438
WINTER PARK, FL 32789
FBPE CERT. OF AUTHORIZATION NO. 29578

DATE: 9.15.11 | DWN BY: MSS | CHK BY: HFN | SCALE: NTS

DWG #: ATR029

SHEET: 5 OF 10

UNEQUAL LITE SINGLE HUNG WINDOWS - DESIGN LOAD CAPACITY (PSF)																		
H (IN.)	W (IN.)	No. of Fastners per Jamb	1/8" ANN.		3/16" ANN.		1/4" ANN.		1/8" TEMP.		3/16" TEMP.		1/4" TEMP.		5/8" OA I.G. (A)		5/8" OA I.G. (T)	
			POS	NEG	POS	NEG	POS	NEG	POS	NEG	POS	NEG	POS	NEG	POS	NEG	POS	NEG
54.875	18.125	6	68.3	90.4	68.3	205.0	68.3	209.0	68.3	209.0	68.3	209.0	68.3	209.0	55.5	209.0	55.5	103.2
	25.500	6	68.3	76.0	68.3	128.0	68.3	176.0	68.3	196.6	68.3	198.1	68.3	198.1	55.5	163.0	55.5	198.1
	36.000	6	58.9	58.9	68.3	94.8	68.3	123.0	68.3	106.2	68.3	140.3	68.3	140.3	55.5	127.4	55.5	140.3
	52.125	6	40.4	40.4	54.9	54.9	68.3	79.2	60.9	60.9	68.3	85.3	68.3	96.9	55.5	73.1	55.5	96.9
	52.125	8	-	-	-	-	-	-	-	-	-	-	68.3	97.5	-	-	55.5	97.5
62.000	18.125	6	68.3	76.8	68.3	183.0	68.3	209.0	68.3	209.0	68.3	209.0	68.3	209.0	55.5	209.0	55.5	97.5
	25.500	6	59.0	59.0	68.3	102.0	68.3	141.0	68.3	175.3	68.3	175.3	68.3	175.3	55.5	147.0	55.5	175.3
	36.000	6	49.5	49.5	68.3	79.5	68.3	99.6	68.3	105.8	68.3	124.2	68.3	124.2	55.5	124.2	55.5	124.2
	52.125	6	35.2	35.2	51.8	51.8	68.3	72.0	57.5	57.5	68.3	80.5	68.3	85.8	55.5	69.0	55.5	85.8
	52.125	8	-	-	-	-	-	-	-	-	68.3	80.5	68.3	92.1	-	-	55.5	92.1
71.000	18.125	6	68.0	68.0	68.3	166.0	68.3	209.0	68.3	209.0	68.3	209.0	68.3	209.0	55.5	204.0	55.5	92.6
	25.500	6	44.4	44.4	68.3	81.9	68.3	120.0	68.3	153.1	68.3	153.1	68.3	153.1	55.5	109.0	55.5	153.1
	36.000	6	40.7	40.7	64.3	64.3	68.3	80.3	68.3	105.8	68.3	108.4	68.3	108.4	55.5	96.2	55.5	108.4
	52.125	6	28.8	28.8	49.2	49.2	63.3	63.3	54.7	54.7	68.3	74.9	68.3	74.9	55.5	65.6	55.5	74.9
	52.125	8	-	-	-	-	-	-	-	-	68.3	76.6	68.3	87.5	-	-	55.5	87.5
77.000	18.125	6	64.2	64.2	68.3	158.0	68.3	198.6	68.3	198.6	68.3	198.6	68.3	198.6	55.5	193.0	55.5	89.8
	25.500	6	38.2	38.2	68.3	75.8	68.3	110.0	68.3	141.2	68.3	141.2	68.3	141.2	55.5	96.5	55.5	141.2
	36.000	6	36.4	36.4	56.0	56.0	68.3	71.0	68.3	100.0	68.3	100.0	68.3	100.0	55.5	84.5	55.5	100.0
	52.125	6	25.7	25.7	46.8	46.8	57.7	57.7	54.5	54.5	68.3	69.1	68.3	69.1	55.5	65.4	55.5	69.1
	52.125	8	-	-	-	-	-	-	-	-	68.3	76.3	68.3	87.2	55.5	65.4	55.5	87.2

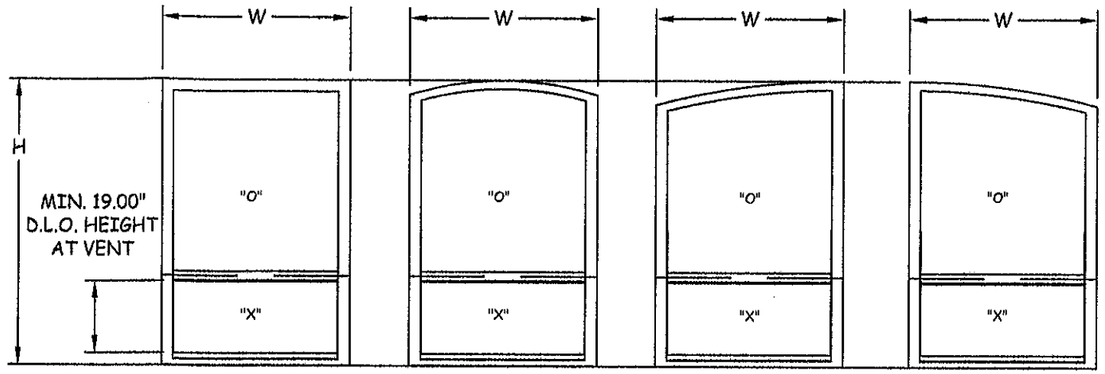

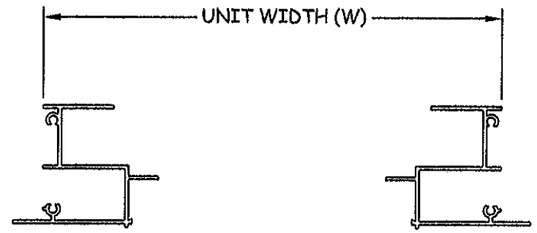

FLANGE FRAME WINDOWS

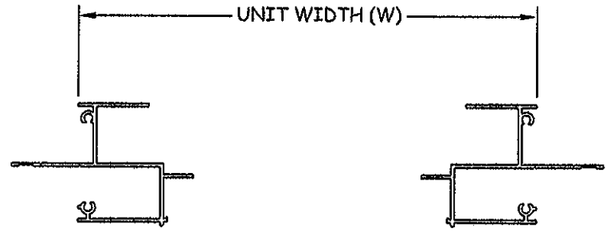

FIN FRAME WINDOWS

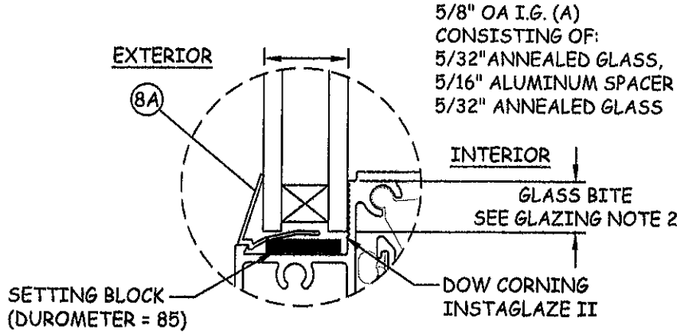

GLAZING DETAIL B1

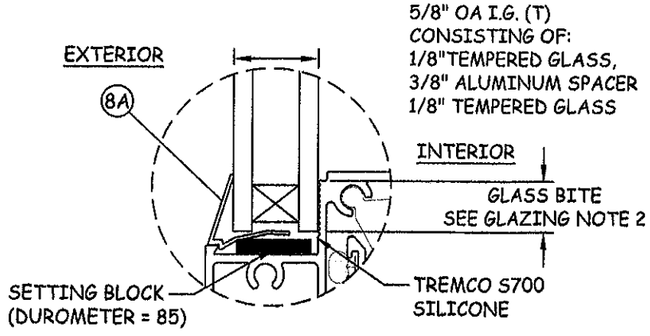

GLAZING DETAIL B2

GLAZING OPTIONS B

GLAZING NOTES:

1) **ALL GLAZING LOAD RESISTANCE CAPACITIES HEREIN COMPLY WITH ASTM E 1300-04.**
2) **INSULATED GLAZING UNITS SHALL HAVE A MINIMUM GLASS BITE OF 3/8" FOR FIXED LITES AND A MINIMUM GLASS BITE OF 13/32" FOR OPERABLE LITES.**

PRODUCT RENEWED
as complying with the Florida
Building Code
Acceptance No 11-1212.01
Expiration Date 04/29/2014
By
Miami Dade Product Control

ATRIUM COMPANIES, INC.
9001 AMBASSADOR ROW
DALLAS, TEXAS 75247
PH: (214) 637-2696 FX: (214) 424-6734

TITLE: MSH/M40-50 XHP
AL. SINGLE-HUNG WINDOWS
UNEQUAL LITE, STANDARD SIZE
DP TABLES & GLAZING OPTIONS B

PREPARED BY:
BUILDING DROPS, INC.
127 W. FAIRBANKS AVE., STE. 438
WINTER PARK, FL 32789
PH: (407) 644-6957 FX: (407) 644-2366

REVISIONS

NO.	DESCRIPTION	BY	DATE

ALEXIS SPYROU
FLORIDA P.E. NO. 68172
127 W. FAIRBANKS AVE. STE. 438
WINTER PARK, FL 32789
FBPE CERT. OF AUTHORIZATION NO. 29578

DATE: 9.15.11
DWN BY: MSS
CHK BY: HFN
SCALE: NTS

DWG #: ATR029

SHEET: 6 OF 10

EQUAL LITE SINGLE HUNG WINDOWS - DESIGN LOAD CAPACITY (PSF)

H (IN.)	W (IN.)	No. of Fastners per Jamb	1/8" ANN.		3/16" ANN.		1/4" ANN.		1/8" TEMP.		3/16" TEMP.		1/4" TEMP.		5/8" OA I.G. (A)		5/8" OA I.G. (T)	
			POS	NEG	POS	NEG	POS	NEG	POS	NEG	POS	NEG	POS	NEG	POS	NEG	POS	NEG
28.00	24.00	4	68.3	175.0	68.3	209.0	68.3	209.0	68.3	209.0	68.3	209.0	68.3	209.0	55.5	209.0	55.5	209.0
	28.00	4	68.3	149.0	68.3	193.7	68.3	209.0	68.3	209.0	68.3	209.0	68.3	209.0	55.5	209.0	55.5	209.0
	32.00	4	68.3	136.0	68.3	162.7	68.3	206.2	68.3	180.8	68.3	206.2	68.3	206.2	55.5	206.2	55.5	206.2
	36.00	4	68.3	127.0	68.3	140.3	68.3	183.3	68.3	155.9	68.3	183.3	68.3	183.3	55.5	183.3	55.5	183.3
	40.00	4	68.3	121.0	68.3	123.3	68.3	165.0	68.3	137.0	68.3	165.0	68.3	165.0	55.5	164.4	55.5	165.0
	44.00	4	68.3	110.0	68.3	110.0	68.3	150.0	68.3	122.2	68.3	150.0	68.3	150.0	55.5	146.6	55.5	150.0
	48.00	4	68.3	99.2	68.3	99.2	68.3	137.5	68.3	110.3	68.3	137.5	68.3	137.5	55.5	132.3	55.5	137.5
	52.00	4	68.3	90.4	68.3	90.4	68.3	126.9	68.3	100.5	68.3	126.9	68.3	126.9	55.5	120.5	55.5	126.9
36.00	24.00	4	68.3	137.0	68.3	209.0	68.3	209.0	68.3	209.0	68.3	209.0	68.3	209.0	55.5	209.0	55.5	160.7
	28.00	4	68.3	111.0	68.3	166.5	68.3	183.3	68.3	183.3	68.3	183.3	68.3	183.3	55.5	183.3	55.5	183.3
	32.00	4	68.3	93.5	68.3	137.6	68.3	160.4	68.3	152.9	68.3	160.4	68.3	160.4	55.5	160.4	55.5	160.4
	36.00	4	68.3	80.7	68.3	117.2	68.3	142.6	68.3	130.2	68.3	142.6	68.3	142.6	55.5	142.6	55.5	142.6
	40.00	4	68.3	73.1	68.3	102.1	68.3	128.3	68.3	113.4	68.3	128.3	68.3	128.3	55.5	128.3	55.5	128.3
	44.00	4	67.4	67.4	68.3	90.4	68.3	116.7	68.3	100.5	68.3	116.7	68.3	116.7	55.5	116.7	55.5	116.7
	48.00	4	62.9	62.9	68.3	81.1	68.3	106.9	68.3	90.1	68.3	106.9	68.3	106.9	55.5	106.9	55.5	106.9
	52.00	4	60.3	60.3	68.3	73.6	68.3	98.7	68.3	81.8	68.3	98.7	68.3	98.7	55.5	98.1	55.5	98.7
	48.00	6	-	-	-	-	68.3	117.2	-	-	68.3	126.2	68.3	144.2	55.5	108.2	55.5	130.8
	52.00	6	-	-	-	-	68.3	106.3	-	-	68.3	114.5	68.3	130.8	55.5	98.1	55.5	143.6
44.00	24.00	4	68.3	118.0	68.3	175.0	68.3	175.0	68.3	175.0	68.3	175.0	68.3	175.0	55.5	175.0	55.5	130.8
	28.00	4	68.3	100.0	68.3	150.0	68.3	150.0	68.3	150.0	68.3	150.0	68.3	150.0	55.5	150.0	55.5	150.0
	32.00	4	68.3	84.0	68.3	123.3	68.3	131.2	68.3	131.2	68.3	131.2	68.3	131.2	55.5	131.2	55.5	131.2
	36.00	4	68.3	73.5	68.3	103.6	68.3	116.7	68.3	115.1	68.3	116.7	68.3	116.7	55.5	116.7	55.5	116.7
	40.00	4	62.4	62.4	68.3	89.3	68.3	105.0	68.3	99.2	68.3	105.0	68.3	105.0	55.5	105.0	55.5	105.0
	44.00	4	54.8	54.8	68.3	78.5	68.3	95.4	68.3	87.2	68.3	95.4	68.3	95.4	55.5	95.4	55.5	95.4
	48.00	4	48.9	48.9	68.3	70.0	68.3	87.5	68.3	77.7	68.3	87.5	68.3	87.5	55.5	87.5	55.5	87.5
	52.00	4	44.3	44.3	63.1	63.1	68.3	80.8	68.3	70.2	68.3	80.8	68.3	80.8	55.5	80.8	55.5	80.8
	48.00	6	-	-	-	-	68.3	101.1	68.3	77.7	68.3	108.8	68.3	124.4	55.5	93.3	55.5	112.3
	52.00	6	-	-	-	-	68.3	91.2	-	-	68.3	98.2	68.3	112.3	55.5	84.2	55.5	120.4
52.00	24.00	6	68.3	101.0	68.3	179.0	68.3	209.0	68.3	209.0	68.3	209.0	68.3	209.0	55.5	209.0	55.5	112.3
	28.00	6	68.3	89.6	68.3	146.0	68.3	190.4	68.3	162.3	68.3	190.4	68.3	190.4	55.5	190.4	55.5	190.4
	32.00	6	68.3	78.9	68.3	115.3	68.3	166.5	68.3	128.1	68.3	166.6	68.3	166.6	55.5	153.7	55.5	166.6
	36.00	6	68.3	69.3	68.3	95.2	68.3	137.6	68.3	105.8	68.3	148.1	68.3	148.1	55.5	127.0	55.5	148.1
	40.00	6	60.5	60.5	68.3	81.1	68.3	117.2	68.3	90.1	68.3	126.2	68.3	133.3	55.5	108.2	55.5	133.3
	44.00	6	52.9	52.9	68.3	70.7	68.3	102.1	68.3	78.5	68.3	109.9	68.3	121.1	55.5	94.2	55.5	121.1
	48.00	6	47.4	47.4	62.6	62.6	68.3	90.4	68.3	69.5	68.3	97.4	68.3	111.0	55.5	83.5	55.5	111.0
	52.00	6	41.7	41.7	56.2	56.2	68.3	81.1	62.4	62.4	68.3	87.4	68.3	99.9	55.5	74.9	55.5	102.5
	48.00	8	-	-	-	-	-	-	-	-	-	-	68.3	111.3	-	-	55.5	99.9
	52.00	8	-	-	-	-	-	-	-	-	-	-	68.3	99.9	-	-	55.5	104.9
60.00	24.00	6	68.3	86.1	68.3	149.0	68.3	192.5	68.3	192.5	68.3	192.5	68.3	192.5	55.5	192.5	55.5	99.9
	28.00	6	68.3	79.1	68.3	132.0	68.3	165.0	68.3	161.4	68.3	165.0	68.3	165.0	55.5	165.0	55.5	165.0
	32.00	6	68.3	71.7	68.3	111.7	68.3	144.4	68.3	124.1	68.3	144.4	68.3	144.4	55.5	144.4	55.5	144.4
	36.00	6	63.4	63.4	68.3	90.4	68.3	128.3	68.3	100.5	68.3	128.3	68.3	128.3	55.5	120.5	55.5	128.3
	40.00	6	57.0	57.0	68.3	75.9	68.3	109.7	68.3	84.4	68.3	115.5	68.3	115.5	55.5	101.3	55.5	115.5
	44.00	6	51.4	51.4	65.5	65.5	68.3	94.6	68.3	72.7	68.3	101.8	68.3	105.0	55.5	87.3	55.5	105.0
	48.00	6	46.3	46.3	57.5	57.5	68.3	83.1	63.9	63.9	68.3	89.5	68.3	96.2	55.5	76.7	55.5	96.2
	52.00	6	41.7	41.7	51.3	51.3	68.3	74.1	57.0	57.0	68.3	79.8	68.3	88.8	55.5	68.4	55.5	88.8
	48.00	8	-	-	-	-	-	-	-	-	68.3	89.5	68.3	102.3	-	-	55.5	91.2
	52.00	8	-	-	-	-	-	-	-	-	68.3	79.8	68.3	91.2	-	-	55.5	94.2
72.00	24.00	6	68.3	69.9	68.3	124.0	68.3	160.4	68.3	160.4	68.3	160.4	68.3	160.4	55.5	160.4	55.5	91.2
	28.00	6	65.7	65.7	68.3	106.0	68.3	137.5	68.3	137.5	68.3	137.5	68.3	137.5	55.5	137.5	55.5	137.5
	32.00	6	60.3	60.3	68.3	96.2	68.3	120.3	68.3	120.3	68.3	120.3	68.3	120.3	55.5	120.3	55.5	120.3
	36.00	6	54.7	54.7	68.3	87.9	68.3	106.9	68.3	97.7	68.3	106.9	68.3	106.9	55.5	106.9	55.5	106.9
	40.00	6	49.6	49.6	68.3	71.9	68.3	96.2	68.3	79.9	68.3	96.2	68.3	96.2	55.5	95.9	55.5	96.2
	44.00	6	45.5	45.5	60.9	60.9	68.3	87.5	67.6	67.6	68.3	87.5	68.3	87.5	55.5	81.1	55.5	87.5
	48.00	6	41.4	41.4	52.7	52.7	68.3	76.2	58.6	58.6	68.3	80.2	68.3	80.2	55.5	70.3	55.5	80.2
	52.00	6	38.7	38.7	46.5	46.5	67.2	67.2	51.7	51.7	68.3	72.4	68.3	74.0	55.5	62.0	55.5	74.0
	48.00	8	-	-	-	-	68.3	76.2	-	-	68.3	82.0	68.3	93.8	-	-	55.5	82.7
	52.00	8	-	-	-	-	67.2	67.2	-	-	68.3	72.4	68.3	82.7	-	-	55.5	83.7
77.00	24.00	6	63.0	63.0	68.3	115.0	68.3	150.0	68.3	150.0	68.3	150.0	68.3	150.0	55.5	150.0	55.5	82.7
	28.00	6	60.8	60.8	68.3	98.3	68.3	128.6	68.3	128.6	68.3	128.6	68.3	128.6	55.5	128.6	55.5	128.6
	32.00	6	56.8	56.8	68.3	89.4	68.3	112.5	68.3	112.5	68.3	112.5	68.3	112.5	55.5	112.5	55.5	112.5
	36.00	6	51.3	51.3	68.3	82.2	68.3	100.0	68.3	97.7	68.3	100.0	68.3	100.0	55.5	100.0	55.5	100.0
	40.00	6	47.0	47.0	68.3	71.3	68.3	90.0	68.3	79.2	68.3	90.0	68.3	90.0	55.5	90.0	55.5	90.0
	44.00	6	42.5	42.5	59.8	59.8	68.3	81.8	66.4	66.4	68.3	81.8	68.3	81.8	55.5	79.7	55.5	81.8
	48.00	6	39.6	39.6	51.5	51.5	68.3	74.3	57.2	57.2	68.3	75.0	68.3	75.0	55.5	68.6	55.5	75.0
	52.00	6	36.7	36.7	45.2	45.2	65.2	65.2	50.2	50.2	68.3	69.2	68.3	69.2	55.5	60.2	55.5	69.2
	48.00	8	-	-	-	-	68.3	74.3	-	-	68.3	80.0	68.3	91.5	55.5	68.6	55.5	80.3
	52.00	8	-	-	-	-	65.2	65.2	-	-	68.3	70.3	68.3	80.3	-	-	55.5	80.5

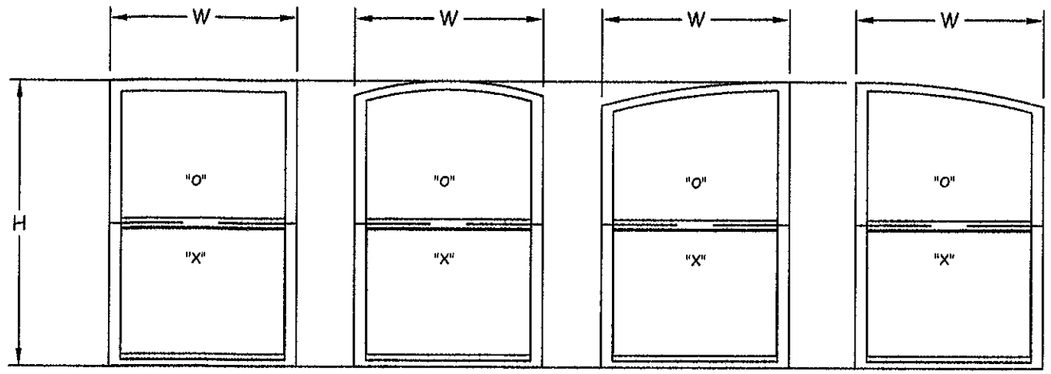

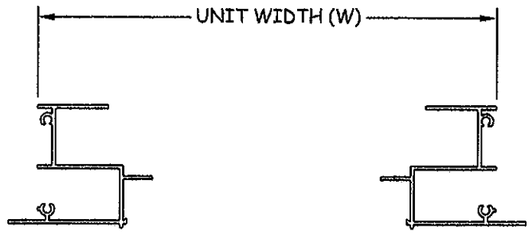

FLANGE FRAME WINDOWS

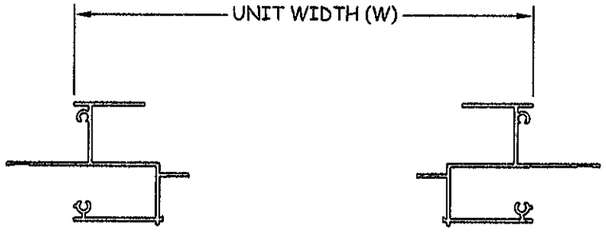

FIN FRAME WINDOWS

PRODUCT RENEWED
as complying with the Florida
Building Code
Acceptance No. 11-1212.01
Expiration Date 04/29/2014
By
Miami Dade Product Control

ATRIUM COMPANIES, INC.
9001 AMBASSADOR ROW
DALLAS, TEXAS 75247
PH: (214) 637-2696 FX: (214) 424-6734

TITLE: MSH/M40-50 XHP
AL. SINGLE-HUNG WINDOWS
EQUAL LITE, INCREMENTAL
SIZE DP TABLES

PREPARED BY:
BUILDING DROPS, INC.
127 W. FAIRBANKS AVE., STE. 438
WINTER PARK, FL 32789
PH: (407) 644-6957 FX: (407) 644-2366

REVISIONS

NO.	DESCRIPTION	BY	DATE

4-7-12

ALEXIS SPYROU
FLORIDA P.E. NO. 69101
127 W. FAIRBANKS AVE. STE 438
WINTER PARK, FL 32789
REPR CERT. OF AUTHORIZATION NO. 29578

DATE: 9.15.11
DWN BY: MSS
CHK BY: HFN
SCALE: NTS
DWG #: ATR029
SHEET: 7 OF 10

UNEQUAL LITE SINGLE HUNG WINDOWS - DESIGN LOAD CAPACITY (PSF)																			
H (IN.)	W (IN.)	No. of Fastners per Jamb	1/8" ANN.		3/16" ANN.		1/4" ANN.		1/8" TEMP.		3/16" TEMP.		1/4" TEMP.		5/8" OA I.G. (A)		5/8" OA I.G. (T)	
			POS	NEG	POS	NEG	POS	NEG	POS	NEG	POS	NEG	POS	NEG	POS	NEG	POS	NEG
52.00	24.00	6	68.3	85.3	68.3	147.0	68.3	205.0	68.3	209.0	68.3	209.0	68.3	209.0	55.5	208.0	55.5	184.1
	28.00	6	68.3	78.7	68.3	131.0	68.3	175.0	68.3	165.4	68.3	190.4	68.3	190.4	55.5	184.0	55.5	158.7
	32.00	6	68.3	71.4	68.3	115.0	68.3	149.0	68.3	130.4	68.3	166.6	68.3	166.6	55.5	156.4	55.5	139.5
	36.00	6	63.0	63.0	68.3	96.6	68.3	133.0	68.3	107.4	68.3	148.1	68.3	148.1	55.5	128.8	55.5	124.4
	40.00	6	56.8	56.8	68.3	82.1	68.3	118.0	68.3	91.3	68.3	127.8	68.3	133.3	55.5	109.5	55.5	112.3
	44.00	6	51.2	51.2	68.3	71.4	68.3	103.2	68.3	79.4	68.3	111.1	68.3	121.1	55.5	95.2	55.5	121.1
	48.00	6	46.3	46.3	63.2	63.2	68.3	91.3	68.3	70.2	68.3	98.3	68.3	111.0	55.5	84.2	55.5	111.0
	52.00	6	41.7	41.7	56.6	56.6	68.3	81.8	62.9	62.9	68.3	88.1	68.3	100.7	55.5	75.5	55.5	102.5
	48.00	8	-	-	-	-	-	-	-	-	68.3	98.3	68.3	112.3	-	-	55.5	127.8
	52.00	8	-	-	-	-	-	-	-	-	-	-	68.3	100.7	-	-	55.5	105.8
60.00	24.00	6	63.9	63.9	68.3	117.0	68.3	165.0	68.3	192.5	68.3	192.5	68.3	192.5	55.5	155.0	55.5	171.8
	28.00	6	61.3	61.3	68.3	99.2	68.3	133.0	68.3	165.0	68.3	165.0	68.3	165.0	55.5	143.0	55.5	146.0
	32.00	6	57.3	57.3	68.3	90.3	68.3	119.0	68.3	130.1	68.3	144.4	68.3	144.4	55.5	136.0	55.5	127.0
	36.00	6	51.6	51.6	68.3	82.7	68.3	104.0	68.3	105.8	68.3	128.3	68.3	128.3	55.5	126.0	55.5	112.3
	40.00	6	47.3	47.3	68.3	78.1	68.3	96.1	68.3	88.3	68.3	115.5	68.3	115.5	55.5	105.9	55.5	100.7
	44.00	6	42.9	42.9	68.0	68.0	68.3	86.6	68.3	75.6	68.3	105.0	68.3	105.0	55.5	90.7	55.5	105.0
	48.00	6	39.8	39.8	59.5	59.5	68.3	80.1	66.1	66.1	68.3	92.6	68.3	96.2	55.5	79.4	55.5	96.2
	52.00	6	36.9	36.9	52.9	52.9	68.3	74.1	58.8	58.8	68.3	82.3	68.3	88.8	55.5	70.5	55.5	88.8
	48.00	8	-	-	-	-	-	-	-	-	68.3	92.6	68.3	105.8	-	-	55.5	118.0
	52.00	8	-	-	-	-	-	-	-	-	68.3	82.3	68.3	94.0	-	-	55.5	97.2
72.00	24.00	6	43.9	43.9	68.3	89.9	68.3	132.0	68.3	160.4	68.3	160.4	68.3	160.4	55.5	114.0	55.5	160.4
	28.00	6	42.8	42.8	68.3	72.7	68.3	100.0	68.3	137.5	68.3	137.5	68.3	137.5	55.5	101.0	55.5	137.5
	32.00	6	42.2	42.2	66.1	66.1	68.3	85.6	68.3	120.3	68.3	120.3	68.3	120.3	55.5	97.2	55.5	120.3
	36.00	6	40.1	40.1	62.5	62.5	68.3	78.8	68.3	105.8	68.3	106.9	68.3	106.9	55.5	94.0	55.5	105.8
	40.00	6	36.9	36.9	60.3	60.3	68.3	74.6	68.3	88.2	68.3	96.2	68.3	96.2	55.5	89.8	55.5	94.0
	44.00	6	33.5	33.5	57.4	57.4	68.3	70.7	68.3	74.8	68.3	87.5	68.3	87.5	55.5	84.3	55.5	87.5
	48.00	6	30.6	30.6	53.8	53.8	66.7	66.7	64.5	64.5	68.3	80.2	68.3	80.2	55.5	77.4	55.5	80.2
	52.00	6	28.4	28.4	50.7	50.7	62.7	62.7	56.3	56.3	68.3	74.0	68.3	74.0	55.5	67.5	55.5	74.0
	48.00	8	-	-	-	-	-	-	-	-	68.3	90.3	68.3	103.2	55.5	77.4	55.5	106.9
	52.00	8	-	-	-	-	-	-	-	-	68.3	78.8	68.3	90.1	55.5	67.5	55.5	92.0
77.00	24.00	6	39.4	39.4	68.3	83.7	68.3	125.0	68.3	150.0	68.3	150.0	68.3	150.0	55.5	107.0	55.5	150.0
	28.00	6	37.8	37.8	64.9	64.9	68.3	92.8	68.3	128.6	68.3	128.6	68.3	128.6	55.5	89.2	55.5	128.6
	32.00	6	37.8	37.8	58.6	58.6	68.3	78.1	68.3	112.5	68.3	112.5	68.3	112.5	55.5	86.2	55.5	112.5
	36.00	6	36.4	36.4	56.0	56.0	68.3	71.0	68.3	100.0	68.3	100.0	68.3	100.0	55.5	84.5	55.5	100.0
	40.00	6	33.6	33.6	54.2	54.2	66.4	66.4	68.3	88.2	68.3	90.0	68.3	90.0	55.5	81.6	55.5	90.0
	44.00	6	30.5	30.5	52.0	52.0	63.4	63.4	68.3	74.8	68.3	81.8	68.3	81.8	55.5	76.6	55.5	81.8
	48.00	6	28.1	28.1	49.7	49.7	60.7	60.7	64.5	64.5	68.3	75.0	68.3	75.0	55.5	71.9	55.5	75.0
	52.00	6	25.8	25.8	46.9	46.9	57.9	57.9	56.2	56.2	68.3	69.2	68.3	69.2	55.5	67.4	55.5	69.2
	48.00	8	-	-	-	-	-	-	-	-	68.3	90.3	68.3	100.0	55.5	71.9	55.5	100.0
	52.00	8	-	-	-	-	-	-	-	-	68.3	78.7	68.3	90.0	55.5	67.4	55.5	91.9

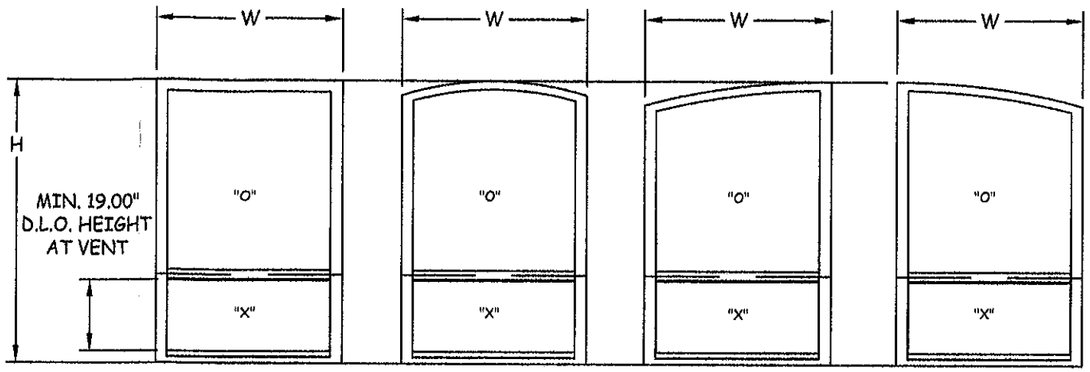

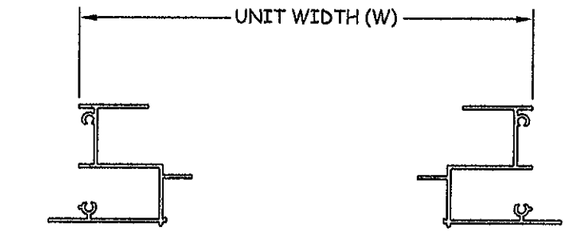

FLANGE FRAME WINDOWS

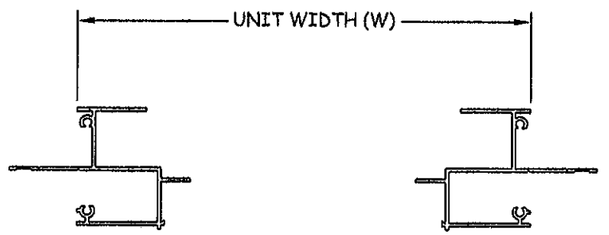

FIN FRAME WINDOWS

ATRIUM COMPANIES, INC.
9001 AMBASSADOR ROW
DALLAS, TEXAS 75247
PH: (214) 637-2696 FX: (214) 424-6734

TITLE: MSH/M40-50 XHP AL. SINGLE-HUNG WINDOWS UNEQUAL LITE, INCREMENTAL SIZE DP TABLES

PREPARED BY:
BUILDING DROPS, INC.
127 W. FAIRBANKS AVE., STE. 438
WINTER PARK, FL 32789
PH: (407) 644-6957 FX: (407) 644-2366

REVISIONS

NO.	DESCRIPTION	BY	DATE

4772

ALEXIS SPYROU
FLORIDA P.E. NO. 69101
127 W. FAIRBANKS AVE. STE. 438
WINTER PARK, FL 32789
FBPE CERT. OF AUTHORIZATION NO. 28573

PRODUCT RENEWED
as complying with the Florida
Building Code
Acceptance No. 11-1212.01
Expiration Date 04/29/2014
By _____
Miami Dade Product Control

DATE: 9.15.11 | DWN BY: MSS | CHK BY: HFN | SCALE: NTS

DWG #: ATR029

SHEET: 8 OF 10

ITEM NO.	DESCRIPTION	MATERIAL	MANUFACTURER/REMARKS
1	HEAD - FLANGE FRAME	AL. 6063-T6	ATRIUM COMPANIES
1A	HEAD - FIN FRAME	AL. 6063-T6	ATRIUM COMPANIES
2	SILL - FLANGE FRAME	AL. 6063-T6	ATRIUM COMPANIES
2A	SILL - FIN FRAME	AL. 6063-T6	ATRIUM COMPANIES
3	JAMB - FLANGE FRAME	AL. 6063-T6	ATRIUM COMPANIES
3A	JAMB - FIN FRAME	AL. 6063-T6	ATRIUM COMPANIES
4	SASH - TOP RAIL	AL. 6063-T6	ATRIUM COMPANIES
5	SASH - BOTTOM RAIL	AL. 6063-T6	ATRIUM COMPANIES
6	SASH - STILE	AL. 6063-T6	ATRIUM COMPANIES
7	FIXED - MEETING RAIL	AL. 6063-T6	ATRIUM COMPANIES
8	GLAZING BEAD - MONOLITHIC GLASS	AL. 6063-T6	-
8A	GLAZING BEAD - INSULATED GLASS	PVC	DOW TECH
9	GLAZING COMPOUND - INSTAGLAZE II	SILICONE	DOW CORNING
10	FRAME ASSEMBLY SCREW	-	#8 X 5/8" PHPH SMS
11	SASH ASSEMBLY SCREW	-	#8 X 5/8" PHPH SMS
12	FIN SEAL WEATHERSTRIPPING	-	-
13	VINYL WEATHERSTRIPPING	PVC	-
14	BLOCK AND TACKLE BALANCE	-	CALDWELL
15	SNAP LATCH 3" LONG W/ SPRING	NYLON	HUGHES SUPPLY
16	BULB WEATHERSTRIPPING	-	Q-LON 0.190" X 0.300"
17	SASH TOP GUIDE	NYLON	-
18	SASH BOTTOM GUIDE	NYLON	-

1 HEAD - FLANGE FRAME
ALUMINUM 6063-T6

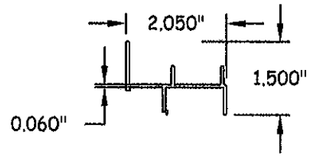

1A HEAD - FIN FRAME
ALUMINUM 6063-T6

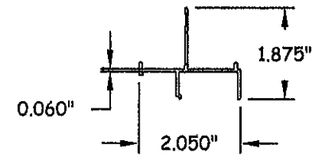

2 SILL - FLANGE FRAME
ALUMINUM 6063-T6

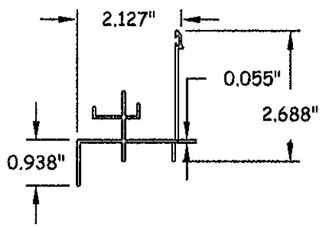

2A SILL - FIN FRAME
ALUMINUM 6063-T6

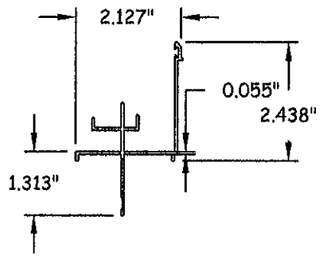

3 JAMB - FLANGE FRAME
ALUMINUM 6063-T6

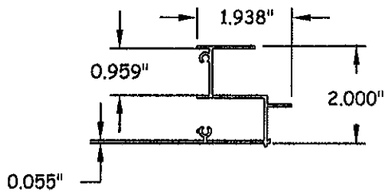

3A JAMB - FIN FRAME
ALUMINUM 6063-T6

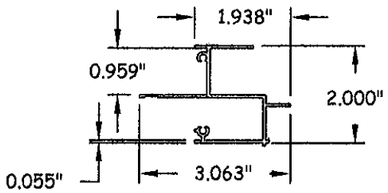

4 SASH - TOP RAIL
ALUMINUM 6063-T6

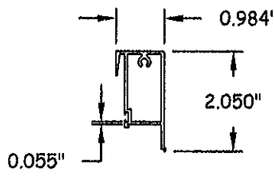

5 SASH - BOTTOM RAIL
ALUMINUM 6063-T6

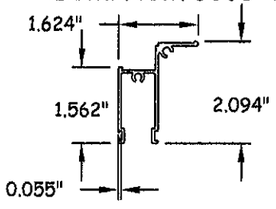

6 SASH - STILE
ALUMINUM 6063-T6

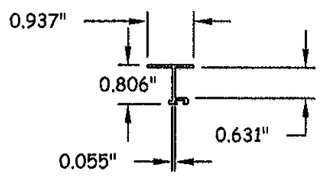

7 FIXED MEETING RAIL
ALUMINUM 6063-T6

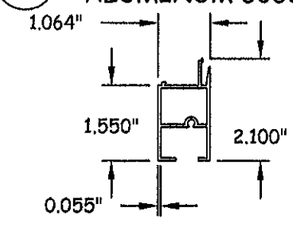

8 GLAZING BEAD - MONO.
ALUMINUM 6063-T6
(0.0336" THICK)

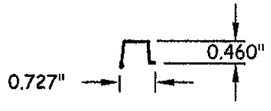

8A GLAZING BEAD - I.G.
PVC
(0.025" THICK)
(DUROMETER=80)

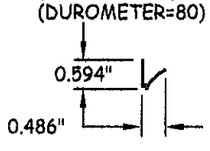

15 SNAP LATCH
NYLON

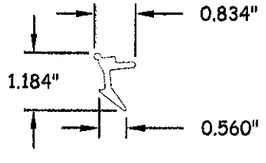

PRODUCT RENEWED
as complying with the Florida
Building Code 11-1212.01
Acceptance No.
Expiration Date 04/29/2014
By
Miami Dade Product Control

ATRIUM COMPANIES, INC.
9001 AMBASSADOR ROW
DALLAS, TEXAS 75247
PH: (214) 637-2696 FX: (214) 424-6734

TITLE: MSH/M40-50 XHP
AL. SINGLE-HUNG WINDOWS
COMPONENTS &
BILL OF MATERIALS

PREPARED BY:
BUILDING DROPS, INC.
127 W. FAIRBANKS AVE., STE. 438
WINTER PARK, FL 32789
PH: (407) 644-6957 FX: (407) 644-2366

REVISIONS

NO.	DESCRIPTION	BY	DATE

ALEXIS SPYROU
FLORIDA P.E. NO. 68101
127 W. FAIRBANKS AVE. STE. 438
WINTER PARK, FL 32789
FBPE CERT. OF AUTHORIZATION NO. 28578

DATE: 9.15.11
DWN BY: MSS
CHK BY: HFN
SCALE: NTS
DWG #: ATR029
SHEET: 9 OF 10

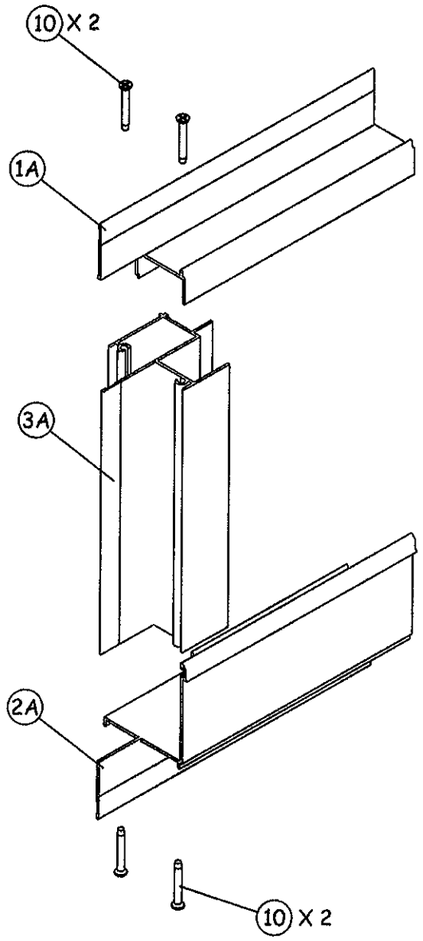

J/10 CORNER SECTION

FIN FRAME CORNER ASSEMBLY
TYPICAL

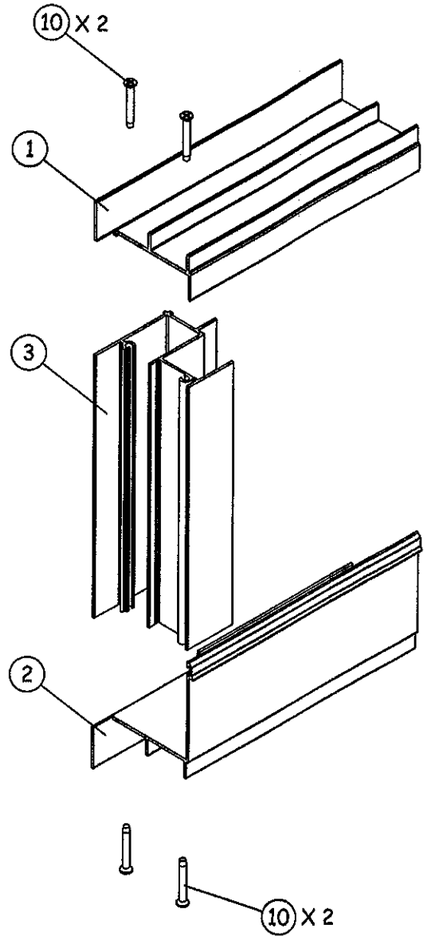

K/10 CORNER SECTION

FLANGE FRAME CORNER ASSEMBLY
TYPICAL

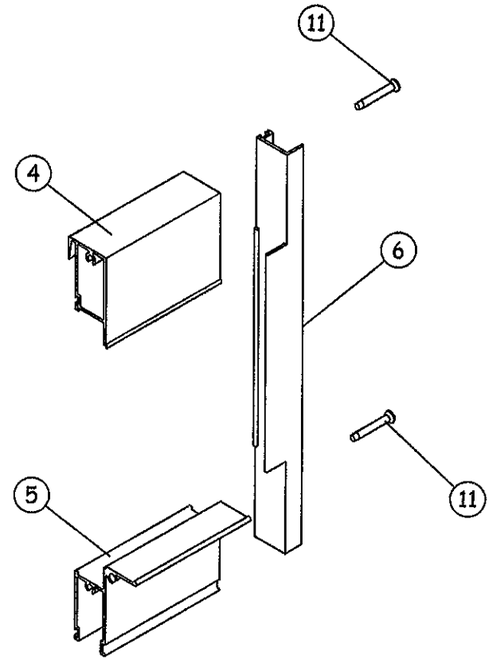

L/10 CORNER SECTION

OPERABLE SASH CORNER ASSEMBLY
TYPICAL

PRODUCT RENEWED
as complying with the Florida
Building Code 11-1212.0
Acceptance No
Expiration Date 04/29/2014
By
Miami Dade Product Control

ATRIUM COMPANIES, INC.

9001 AMBASSADOR ROW
DALLAS, TEXAS 75247
PH: (214) 637-2696 FX: (214) 424-6734

TITLE: MSH/M40-50 XHP
AL. SINGLE-HUNG WINDOWS
CORNER SECTION ASSEMBLIES

PREPARED BY:
BUILDING DROPS, INC.
127 W. FAIRBANKS AVE., STE. 438
WINTER PARK, FL 32789
PH: (407) 644-6957 FX: (407) 644-2366

REVISIONS

NO.	DESCRIPTION	BY	DATE

ALEXIS SPYROU
FLORIDA P.E. NO. 68101
127 W. FAIRBANKS AVE. STE 438
WINTER PARK, FL 32789
REPR CERT. OF AUTHORIZATION NO. 28578

DATE: 9.15.11
DWN BY: MSS
CHK BY: HFN
SCALE: NTS

DWG #: ATR029

SHEET: 10 OF 10