MIAMI-DADE COUNTY
DEPARTMENT OF PERMITTING, ENVIRONMENT, AND REGULATORY AFFAIRS (PERA)
BOARD AND CODE ADMINISTRATION DIVISION

MIAMI-DADE COUNTY
PRODUCT CONTROL SECTION
11805 SW 26 Street, Room 208
Miami, Florida 33175-2474
T (786) 315-2590 F (786) 315-2599
www.miamidade.gov/pera/

NOTICE OF ACCEPTANCE (NOA)

Construction Specialties, Inc.
49 Meeker Avenue
Cranford, NJ 07016

SCOPE:

This NOA is being issued under the applicable rules and regulations governing the use of construction materials. The documentation submitted has been reviewed and accepted by Miami-Dade County PERA - Product Control Section to be used in Miami Dade County and other areas where allowed by the Authority Having Jurisdiction (AHJ).

This NOA shall not be valid after the expiration date stated below. The Miami-Dade County Product Control Section (In Miami Dade County) and/or the AHJ (in areas other than Miami Dade County) reserve the right to have this product or material tested for quality assurance purposes. If this product or material fails to perform in the accepted manner, the manufacturer will incur the expense of such testing and the AHJ may immediately revoke, modify, or suspend the use of such product or material within their jurisdiction. PERA reserves the right to revoke this acceptance, if it is determined by Miami-Dade County Product Control Section that this product or material fails to meet the requirements of the applicable building code.

This product is approved as described herein, and has been designed to comply with the Florida Building Code, including the High Velocity Hurricane Zone.

DESCRIPTION: Model DC-4174 Aluminum Louver

APPROVAL DOCUMENT: Drawing No. **RD-1140**, titled "DC-4174 Submittal Drawings" Sheets 1 through 12 of 12, dated 12/03/2010, with Revision 1 dated 05/24/2011, prepared by Construction Specialties, Inc., signed and sealed by L. David Rice, P.E., bearing the Miami-Dade County Product Control revision stamp with the Notice of Acceptance number and approval date by the Miami-Dade County Product Control Section.

MISSILE IMPACT RATING: Large and Small Missile Impact Resistant

LABELING: Each unit shall bear a permanent label with the manufacturer's name or logo, city, state, model/series, and following statement: "Miami-Dade County Product Control Approved", unless otherwise noted herein.

RENEWAL of this NOA shall be considered after a renewal application has been filed and there has been no change in the applicable building code negatively affecting the performance of this product.

TERMINATION of this NOA will occur after the expiration date or if there has been a revision or change in the materials, use, and/or manufacture of the product or process. Misuse of this NOA as an endorsement of any product, for sales, advertising or any other purposes shall automatically terminate this NOA. Failure to comply with any section of this NOA shall be cause for termination and removal of NOA.

ADVERTISEMENT: The NOA number preceded by the words Miami-Dade County, Florida, and followed by the expiration date may be displayed in advertising literature. If any portion of the NOA is displayed, then it shall be done in its entirety.

INSPECTION: A copy of this entire NOA shall be provided to the user by the manufacturer or its distributors and shall be available for inspection at the job site at the request of the Building Official.

This NOA **revises NOA # 11-0218.04** and consists of this page 1 and evidence page E-1, as well as approval document mentioned above.

The submitted documentation was reviewed by **Carlos M. Utrera, P.E.**

MIAMI-DADE COUNTY APPROVED

02/02/2012

NOA No. 11-1212.07
Expiration Date: June 16, 2016
Approval Date: February 9, 2012

NOTICE OF ACCEPTANCE: EVIDENCE SUBMITTED

A. DRAWINGS

1. Manufacturer's die drawings and sections.
2. Drawing No. **RD-1140**, titled "DC-4174 Submittal Drawings" Sheets 1 through 12 of 12, dated 12/03/2010, with Revision 1 dated 05/24/2011, prepared by Construction Specialties, Inc., signed and sealed by L. David Rice, P.E.

B. TESTS *"Submitted under NOA # 11-0218.04"*

1. Test reports on: 1) Uniform Static Air Pressure Test, Loading per FBC, TAS 202-94
   2) Large Missile Impact Test per FBC, TAS 201-94
   3) Cyclic Wind Pressure Loading per FBC, TAS 203-94

   along with installation diagram of Model DC-4174 Aluminum Louvers, prepared by Architectural Testing, Inc, Test Report No. **A4375.01-109-18**, dated 02/04/2011, signed and sealed by Michael D. Stremmel, P.E.

C. CALCULATIONS *"Submitted under NOA # 11-0218.04"*

1. Model DC-4174 Louver calculations prepared by Rice Engineering, dated 02/15/2011, signed and sealed by L. David Rice, P.E.

D. QUALITY ASSURANCE

1. Miami-Dade Department of Permitting, Environment, and Regulatory Affairs (PERA)

E. MATERIAL CERTIFICATIONS

1. None.

F. STATEMENTS

1. Statement letter of code conformance to 2007 and 2010 FBC issued Rice Engineering, dated 12/06/2011, signed and sealed by L. David Rice, P.E.

   "Submitted under NOA # 11-0218.04"

2. No financial interest letter issued by Rice Engineering, dated 02/15/2011, signed and sealed by L. David Rice, P.E.
3. Laboratory compliance letter for Test Report No. **A4375.01-109-18**, issued by Architectural Testing, Inc., dated 02/04/2011, signed and sealed by Michael D. Stremmel, P.E.

02/02/2012

Carlos M. Utrera, P.E.
Product Control Examiner
NOA No. 11-1212.07
Expiration Date: June 16, 2016
Approval Date: February 9, 2012

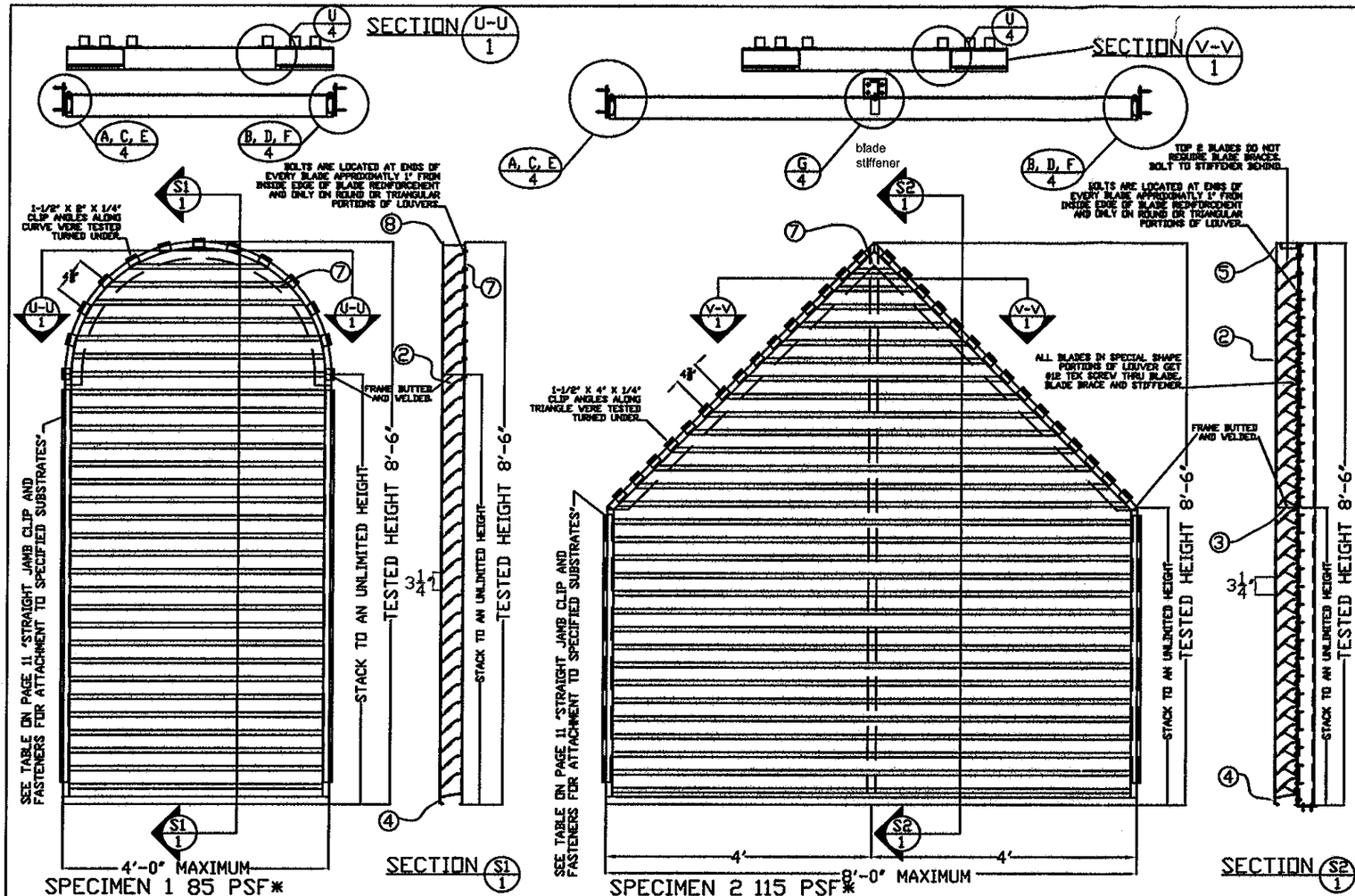

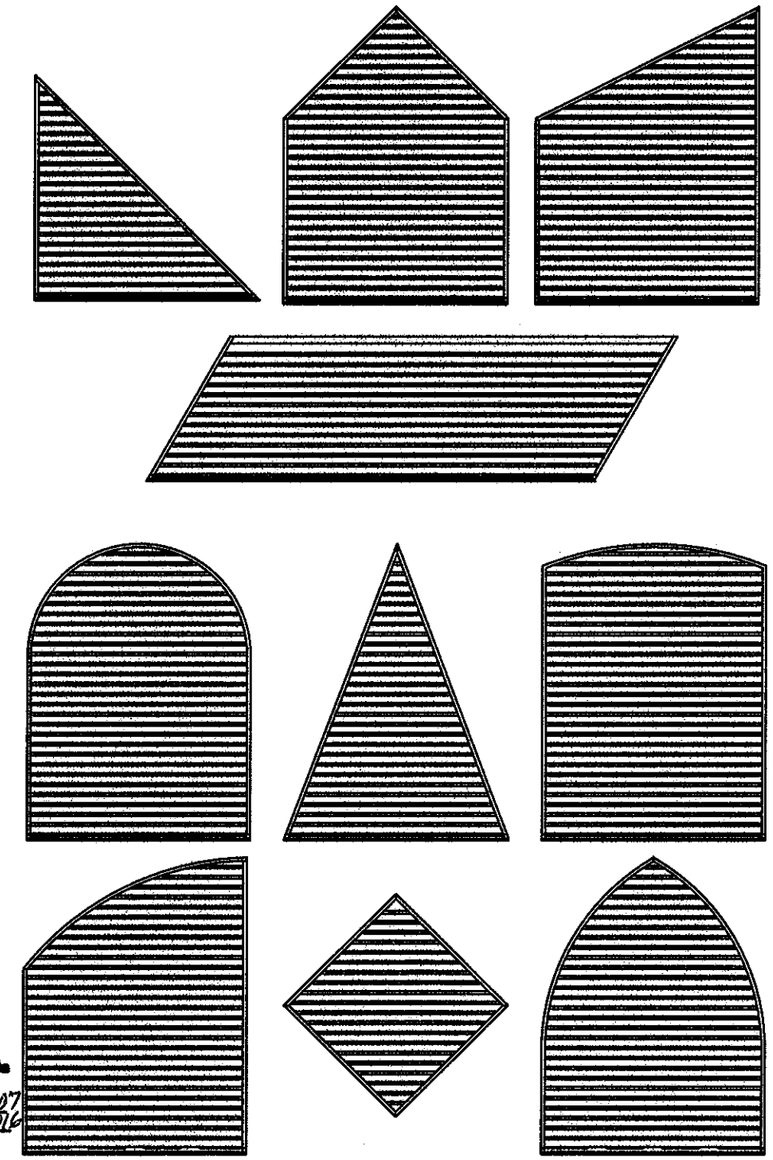

*WINDLOADS SPECIFIED ARE FOR TESTING PURPOSES ONLY. SEE TABLE 4 ON SHEET 12 FOR MAXIMUM BLADE LENGTH AND STIFFENER SPACING ACCORDING TO DESIGN WIND LOAD FOR SPECIMEN 1 OR 2 APPLICATIONS.

1) It shall be the responsibility the Structural Engineer of Record to verify the capacity of the structure to support the loads imposed by the louvers.
2) These louvers have been designed according to the Florida Building Code and the Aluminum Design Manual. They are tested in accordance with Dade County protocols TAS 201, TAS 202 and TAS 203.
3) All fasteners shall be stainless steel or plated steel.
4) Panel widths and heights are limited as shown in elevations and details.
5) The louver is to be installed in a location where the room behind the louver is designed to drain water penetrating into the room and the room will house waterproof or water resistant equipment, components or supplies.
6) Jamb clip spacing may not exceed maximum shown in elevations. Each clip and fastener used must be detailed on the drawing and verified on the NOA.
7) Separation of unpainted aluminum and dissimilar materials to be maintained by the installer.
8) This louver system has been tested, analyzed and approved for design pressures not to exceed 170 PSF and is "Large Missile Impact Resistant".
9) See sheet 12 of 12 for blade span table.
10) Mullion louvers may be stacked horizontally for an unlimited distance as long as recommended blade and mullion spans are maintained
11) Louvers without mullions may be stacked to an unlimited height as long as recommended blade spans are maintained
12) At the sill, the jamb is miter cut and butted into the sloped sill and held with two SS Num 10 X $\frac{3}{4}$" self tapping screws. The joint is sealed with foam tape.
13) The head extrusion is square cut and butted into the jamb or mullion and held with two SS number 10 X 1 inch self tapping screws
14) Blades are attached to vertical jambs with four Number 10 SS socket pan head screws see details pages 4 and 5
15) Blades are attached to shaped louvers with two $\frac{1}{8}$ fillet welds 1 inch long and with a $\frac{1}{4}$-20 nut and bolt through a reinforcement flange attached to the frame see detail U/4

PRODUCT REVISED
as complying with the Florida Building Code
Acceptance No 11-1212.07
Expiration Date 06/16/2016
By
Miami Dade Product Control

RICE ENGINEERING
108 Carroll Creek Trail
Lawrenceville, GA 30043
Phone: 770-846-1649
Fax: 770-846-1649
www.rice-inc.com

Florida Firm No. E-01000005061
Certificate of Authorization #6000
L. David Rice
Registration No: 50923

SPECIAL SHAPES AVAILABLE

DAVID RICE
LICENSED
No. 50923
STATE OF FLORIDA
PROFESSIONAL ENGINEER

DEC 0 6 2011

REVISION: 1 05-24-11
DATE: 12-03-10
SHEET: 1 OF 12
DRW NO: RD-1140
PROJECT: DC-4174
TITLE: SUBMITTAL DRAWINGS
SCALE: 3/4" = 1'-0"
DRW BY: R. GEIST

Construction Specialties™
49 MEEKER AVENUE, CRANFORD, NEW JERSEY
PHONE: 1-800-631-7379 / FAX: 908-272-5844

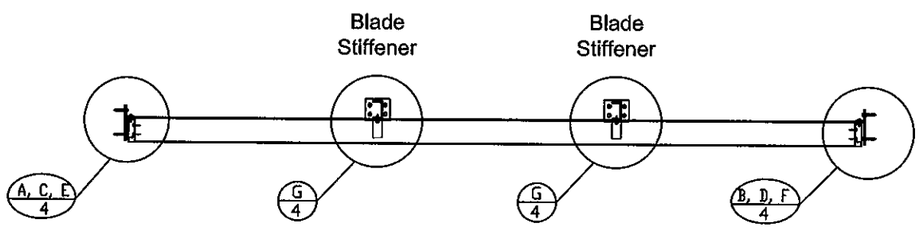

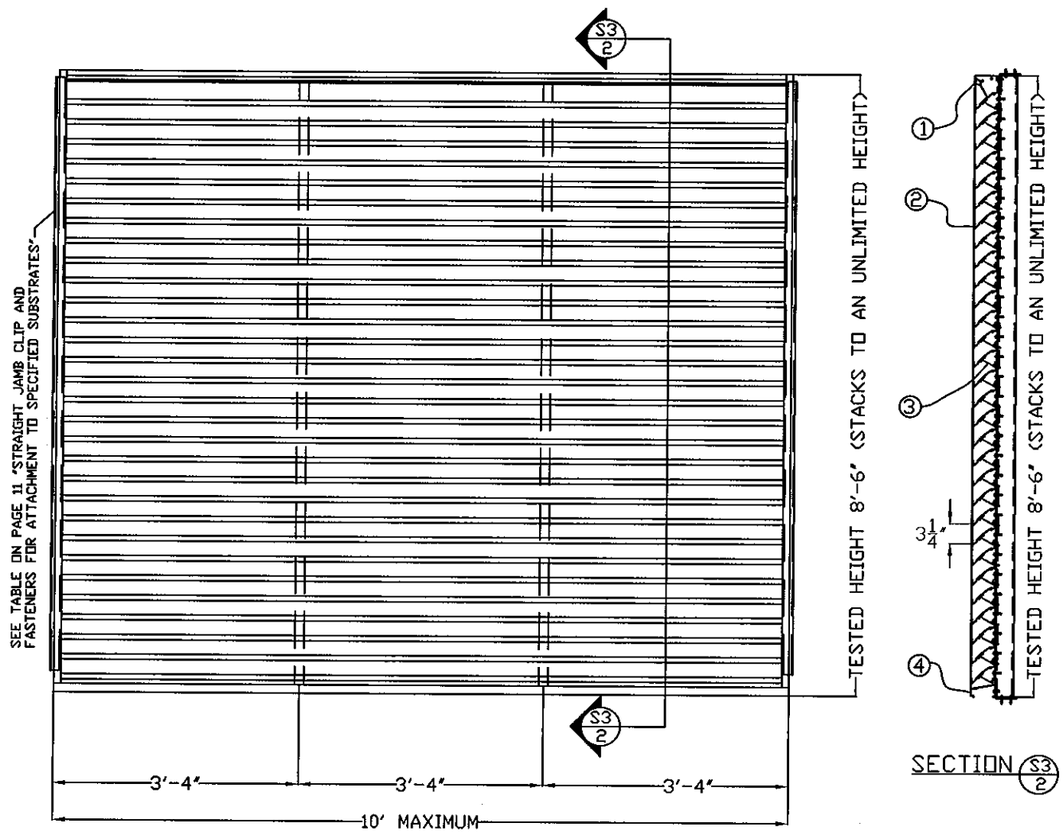

SPECIMEN 3 92 PSF*

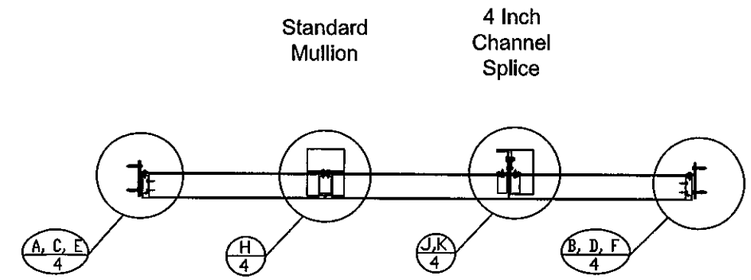

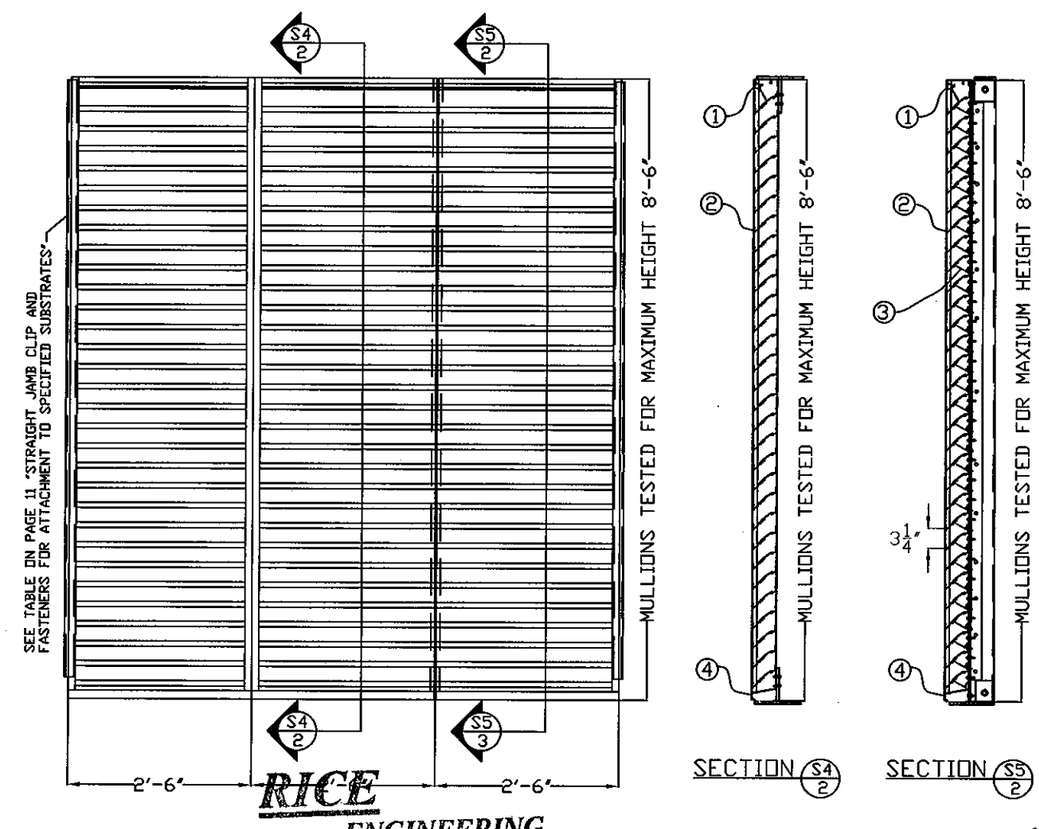

SPECIMEN 4 75 PSF*

*WINDLOADS SPECIFIED ARE FOR TESTING PURPOSES ONLY.
SEE TABLES I AND 4 ON SHEET 12 FOR MAXIMUM BLADE LENGTH AND STIFFENER SPACING ACCORDING TO DESIGN WINDLOAD FOR SPECIMEN 3 OR 4 APPLICATIONS.

PRODUCT REVISED
as complying with the Florida Building Code
Acceptance No 11-1212.07
Expiration Date 06/16/2016
By
Miami Dade Product Control

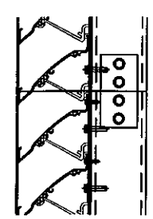

WHEN STACKING UNITS CONTAINING A BLADE STIFFENER, IT IS REQUIRED THAT THE 3" CHANNELS BE TIED TO EACH OTHER TO ACT AS ONE COLUMN. SEE DETAILS FOR STIFFENER JOINT PLATE.

RICE ENGINEERING
105 School Creek Trail
Luxemburg, WI 54217
Phone 920.845 1042
Fax 920.845 1048
www.rice-inc.com
Florida Firm No. F-01000005061
Certificate of Authorization. #9000
L. David Rice
Registration No. 50923

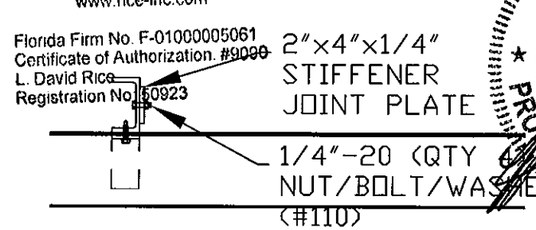

L. DAVID RICE
LICENSED
No. 50923
STATE OF FLORIDA
PROFESSIONAL ENGINEER

DEC 0 6 2011

REVISION: I 05-24-11
DATE: 12-03-10
SHEET: 2 OF 12
DRW NO : RD-1140
PROJECT: DC-4174
TITLE: SUBMITTAL DRAWINGS
SCALE: 3/4" = 1'-0"
DRW BY: R. GEIST

Construction Specialties
49 MEEKER AVENUE, CRANFORD, NEW JERSEY
PHONE: 1-800-631-7379 / FAX: 908-272-5844

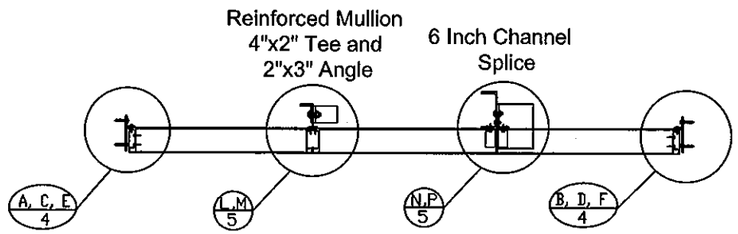

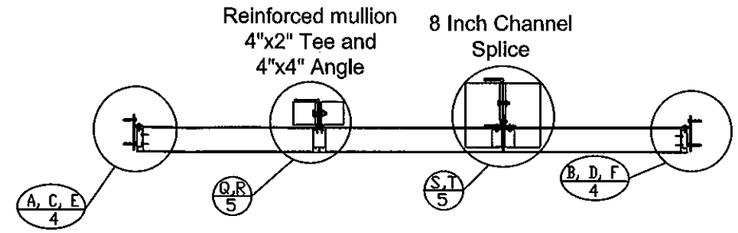

PRODUCT REVISED
as complying with the Florida
Building Code
Acceptance No 11-1212.07
Expiration Date 06/16/2016
By
Miami Dade Product Control

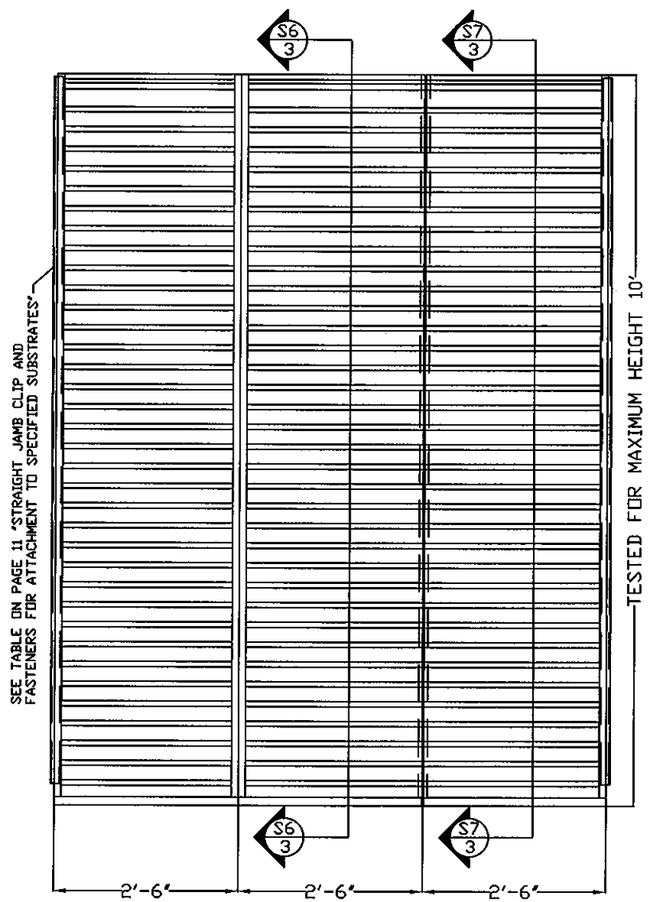

SPECIMEN 5 125 PSF*

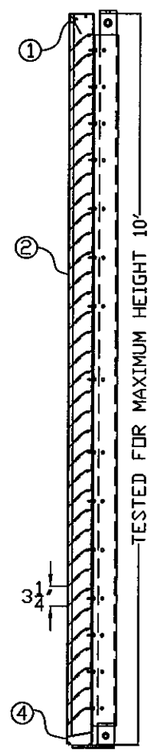

SECTION S6 3

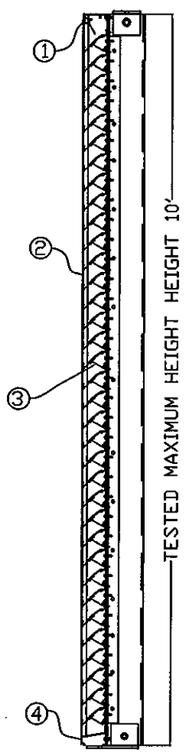

SECTION S7 3

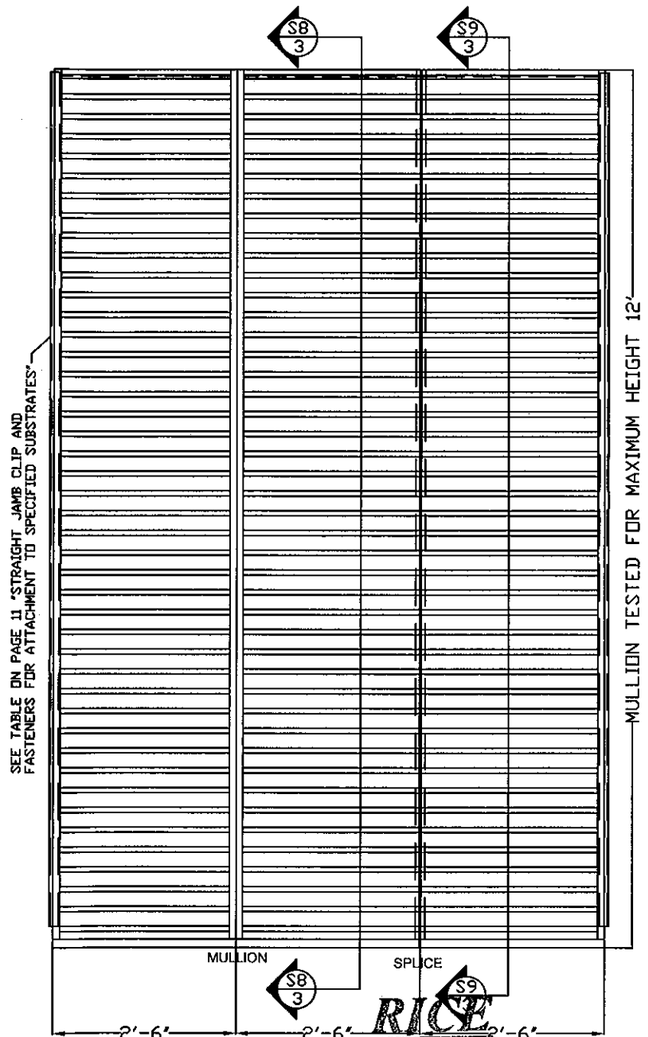

SPECIMEN 6 170 PSF*

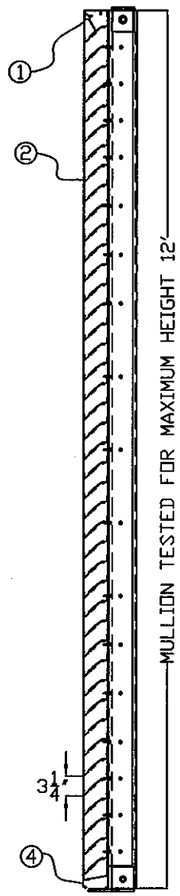

SECTION S8 3

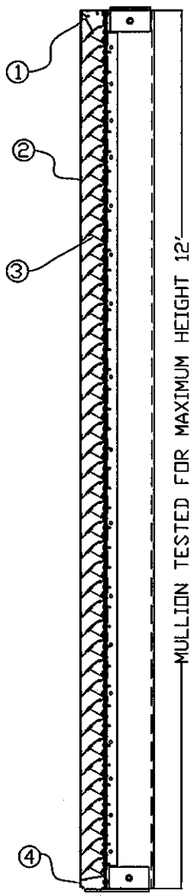

SECTION S9 3

*WINDLOADS SPECIFIED ARE FOR TESTING PURPOSES ONLY.
SEE TABLES 2,3 AND 4 ON SHEET 12 FOR MAXIMUM BLADE LENGTH AND STIFFENER SPACING ACCORDING TO DESIGN WINDLOAD FOR SPECIMEN 5 OR 6 APPLICATIONS.

RICE ENGINEERING
105 School Creek Trail
Luxemburg WI 54217
Phone 920.845 1042
Fax 920.845 1048
www.rice-inc.com

Florida Firm No: F-01000005061
Certificate of Authorization: #9090
L. David Rice
Registration No: 50923

L. DAVID RICE
LICENSE
No. 50923
STATE OF FLORIDA
PROFESSIONAL ENGINEER

DEC 0 6 2011

REVISION: 1	05-24-11
DATE: 12-03-10	
SHEET: 3 OF 12	
DRW NO: RD-1140	
PROJECT: DC-4174	
TITLE: SUBMITTAL DRAWINGS	
SCALE: 1/2" = 1'-0"	
DRW BY: R. GEIST	

Construction Specialties™
49 MEEKER AVENUE, CRANFORD, NEW JERSEY
PHONE: 1-800-631-7379 / FAX: 908-272-5844

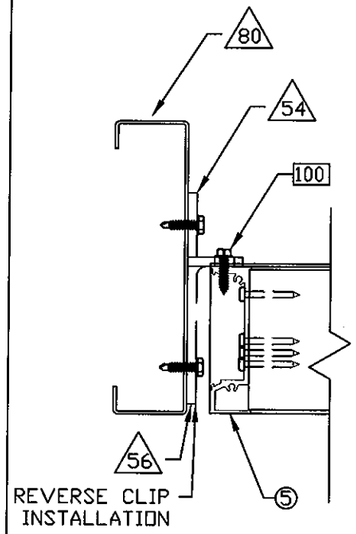

16 Ga MIN GALVANIZED STRUCTURAL STEEL STUD
Detail A/4
SCALE: NTS
SP-ALL

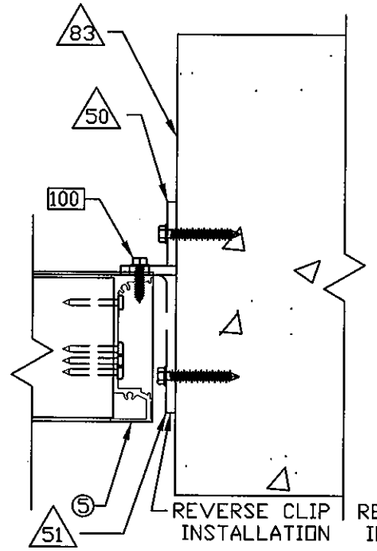

2000 LB MIN CONCRETE
Detail B/4
SCALE: NTS
SP-ALL

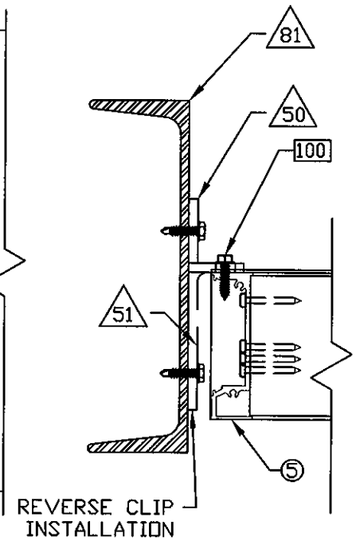

3/16" MINIMUM STRUCTURAL STEEL
Detail C/4
SCALE: NTS
SP-ALL

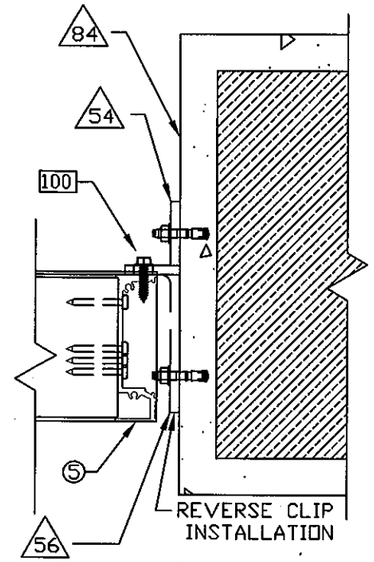

CONCRETE FILLED CMU
Detail D/4
SCALE: NTS
SP-ALL

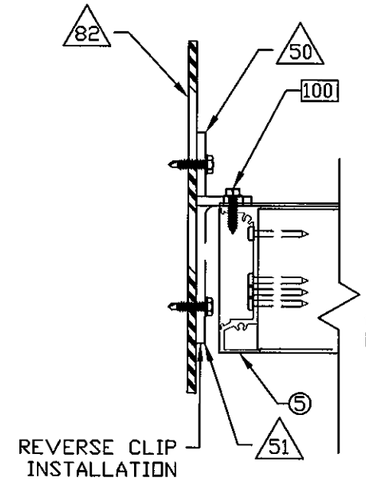

1/8" MINIMUM ALUMINUM PLATE
Detail E/4
SCALE: NTS
SP-ALL

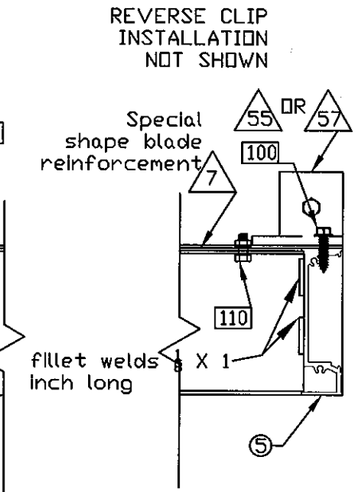

SPECIAL SHAPE LOUVERS
Detail U/4
SCALE: NTS
SP-1 & 2

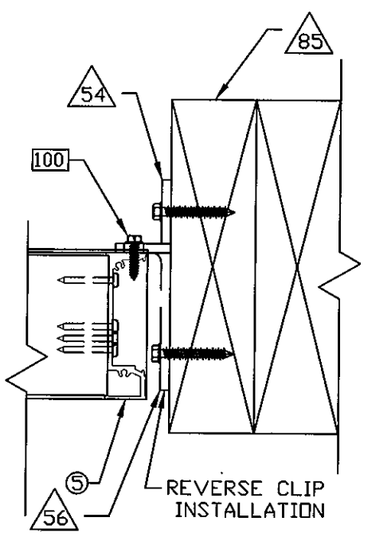

WOOD
G=0.42 MIN.
Detail F/4
SCALE: NTS
SP-ALL

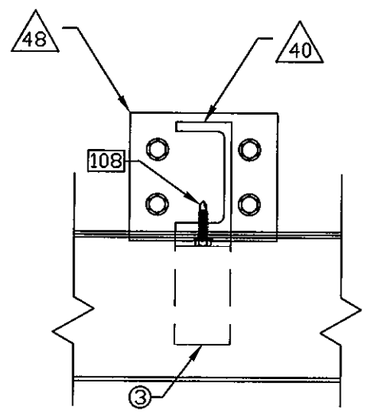

Note: There is no connection between 48 and 40

Detail G/4
SCALE: NTS
SP-2 & 3

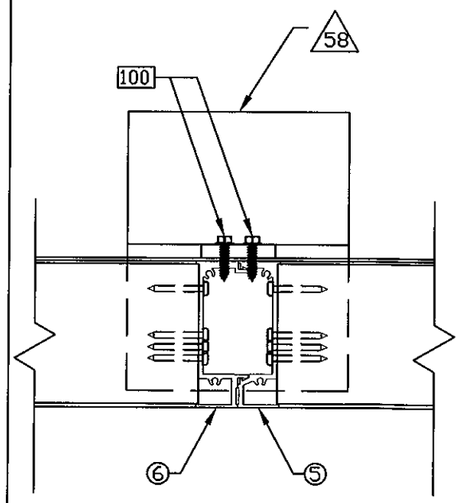

Detail H/4
SCALE: NTS
SP - 4

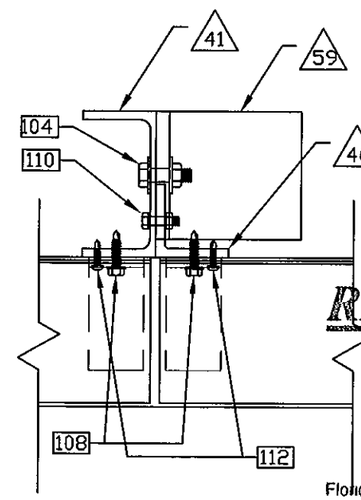

Detail J/4
SCALE: NTS
SP - 4

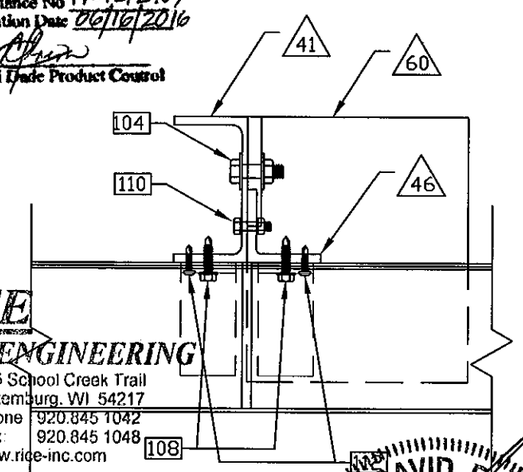

Detail K/4
SCALE: NTS
SP - 4

SEE SHEET 8 FOR CLIP DETAILS

PRODUCT REVISED
as complying with the Florida Building Code
Acceptance No 11-1212.07
Expiration Date 06/16/2016
By
Miami Dade Product Control

RICE ENGINEERING
105 School Creek Trail
Luxemburg, WI 54217
Phone 920.845 1042
Fax 920.845 1048
www.rice-inc.com
Florida Firm No: F-01000005061
Certificate of Authorization: #9090
L. David Rice
Registration No: 50923

L. DAVID RICE LICENSE No. 50923 STATE OF FLORIDA PROFESSIONAL ENGINEER

DEC 0 6 2011

REVISION: 1	05-24-11
DATE: 12-03-10	
SHEET: 4 OF 12	
DRW NO: RD-1140	
PROJECT: DC-4174	
TITLE: SUBMITTAL DRAWINGS	
SCALE: 1/2" = 1'-0"	
DRW BY: R. GEIST	

Construction Specialties™
49 MEEKER AVENUE, CRANFORD, NEW JERSEY
PHONE: 1-800-631-7379 / FAX: 908-272-5844

PRODUCT REVISED
as complying with the Florida
Building Code
Acceptance No 11-1212.07
Expiration Date 06/16/2016
By
Miami-Dade Product Control

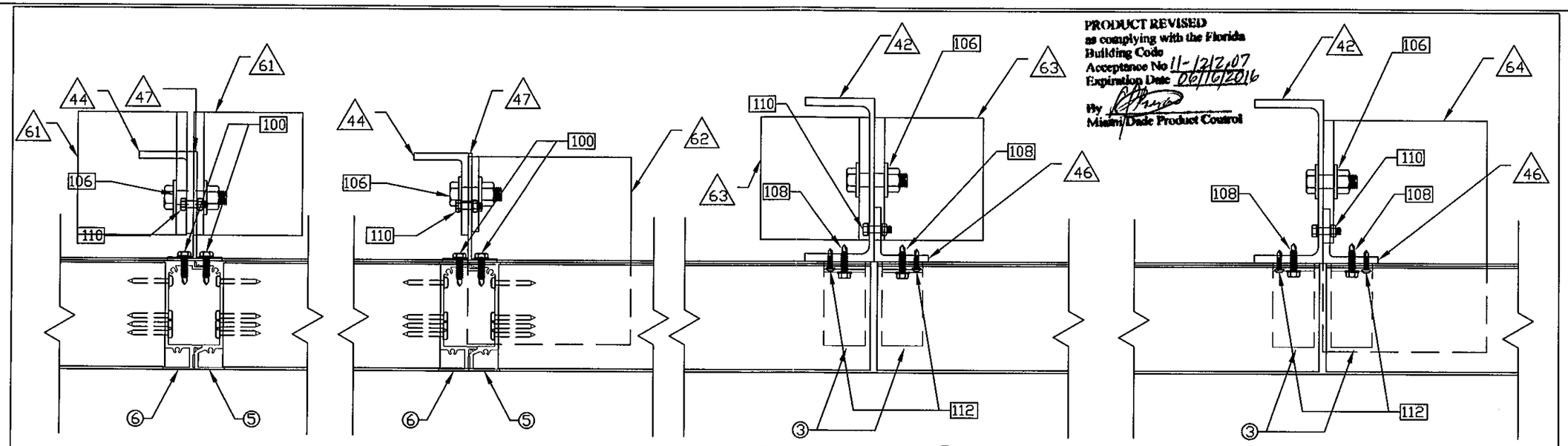

Detail L/5
SCALE: NTS
SP - 5

Detail M/5
SCALE: NTS
SP - 5

Detail N/5
SCALE: NTS
SP - 5

Detail P/5
SCALE: NTS
SP - 5

SEE SHEET 9 FOR CLIP DETAILS

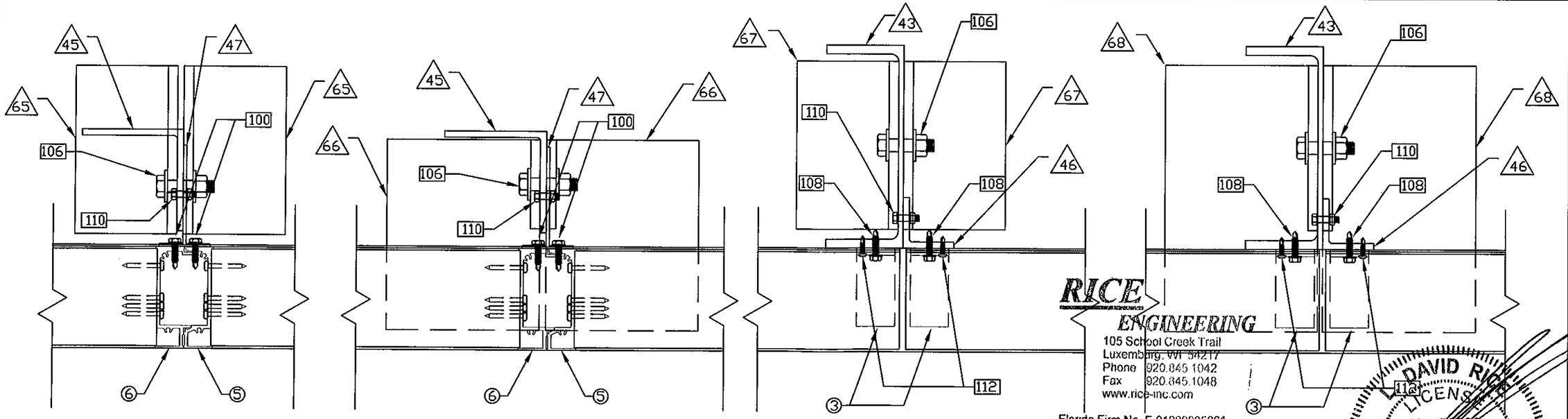

Detail Q/5
SCALE: NTS
SP - 6

Detail R/5
SCALE: NTS
SP - 6

Detail S/5
SCALE: NTS
SP - 6

Detail T/5
SCALE: NTS
SP - 6

SEE SHEET 10 FOR CLIP DETAILS

RICE ENGINEERING
105 School Creek Trail
Luxemburg, WI 54217
Phone 920.845.1042
Fax 920.845.1048
www.rice-inc.com
Florida Firm No F-01000005061
Certificate of Authorization #9099
L. David Rice
Registration No: 50923

L. DAVID RICE
LICENSE
No. 50923
STATE OF FLORIDA
PROFESSIONAL ENGINEER

DEC 0 6 2011

PROJECT: DC-4174
TITLE: SUBMITTAL DRAWINGS
SCALE: 1/2" = 1'-0"
DRW BY: R. GEIST
REVISION: 1 05-24-11
DATE: 12-03-10
SHEET: 5 OF 12
DRW NO: RD-1140

Construction Specialties™
49 MEEKER AVENUE, CRANFORD, NEW JERSEY
PHONE: 1-800-631-7379 / FAX: 908-272-5844

1	HEAD	6063-T6 ALUMINUM 0.070 THK
2	BLADE - STANDARD	6063-T6 ALUMINUM 0.070 THK
3	BLADE BRACE	6105-T5 ALUMINUM 0.121 THK
4	SILL	6063-T5 ALUMINUM 0.080 THK
5	STANDARD JAMB	6063-T6 ALUMINUM 0125 THK
6	STANDARD MULLION HALF	6063-T6 ALUMINUM 0.125 THK
7	SHAPE BLADE REINFORCEMENT	3"x0.080 TRIM TO MATCH SPECIAL SHAPE PROFILE 6063-T6 ALUMINUM
8	HEAD - FOR ROUND SHAPES	6063-T6 ALUMINUM 0.080 THK
40	3" AA CHANNEL	6061-T6 ALUMINUM
41	4" AA CHANNEL	6061-T6 ALUMINUM
42	6" AA CHANNEL	6061-T6 ALUMINUM
43	8" AA CHANNEL	6061-T6 ALUMINUM
44	CONTINUOUS MULLION ANGLE	2"x3"x1/4" ANGLE 6061-T6 ALUMINUM
45	CONTINUOUS MULLION ANGLE	4"x4"x1/4" ANGLE 6061-T6 ALUMINUM
46	BLADE BRACE CARRIER	2"x2"x1/4" ANGLE 6061-T6 ALUMINUM
47	2"x4"x1/8" MULLION TEE	6063-T6 ALUMINUM
48	3 1/2"x4"x1/4" SLIP PLATE	6063-T6 ALUMINUM
50	JAMB CLIP	2"x1-1/2"x1/4"x4-3/4" LG 6061-T6 ALUMINUM
51	JAMB CLIP	4"x1-1/2"x1/4"x4-3/4" LG 6061-T6 ALUMINUM
54	JAMB CLIP	2"x1-1/2"x1/4" CONTINUOUS ANGLE 6061-T6 ALUMINUM
55	JAMB CLIP	2"x1-1/2"x1/4"x2" LG 6061-T6 ALUMINUM
56	JAMB CLIP	4"x1-1/2"x1/4" CONTINUOUS ANGLE 6061-T6 ALUMINUM
57	JAMB CLIP	4"x1-1/2"x1/4"x2" LG 6061-T6 ALUMINUM
58	MULLION CLIP ANGLE	4" x 6" x 3/8" x 6" LG CLIP 6061-T6 ALUMINUM - 2 STANDARD MULLIONS
59	MULLION CLIP ANGLE	4" x 4" x 3/8" x 3 1/2" LG. CLIP 6061-T6 ALUMINUM - 4" CHANNEL SPLICE
60	MULLION CLIP ANGLE	4" x 4" x 3/8" x 7 1/4" LG. COPED CLIP 6061-T6 ALUMINUM - 4" CHANNEL SPLICE ALT.
61	MULLION CLIP ANGLE	4" x 4" x 3/8" x 4 1/2" LG. CLIP 6061-T6 ALUMINUM - 2"x4"x1/8" TEE/2"x3"x1/4" ANGLE MULLION
62	MULLION CLIP ANGLE	4" x 6" x 3/8" x 6 7/8" LG. COPED CLIP 6061-T6 ALUMINUM - 2"x4"x1/8" TEE/2"x3"x1/4" ANGLE MULLION ALT.
63	MULLION CLIP ANGLE	4" x 4" x 3/8" x 4 1/2" LG. CLIP 6061-T6 ALUMINUM - 6" CHANNEL SPLICE
64	MULLION CLIP ANGLE	4" x 6" x 3/8" x 8 1/2" LG. COPED CLIP 6061-T6 ALUMINUM - 6" CHANNEL SPLICE ALT.
65	MULLION CLIP ANGLE	4" x 4" x 3/8" x 6 5/8" LG. CLIP 6061-T6 ALUMINUM - 2"x4"x1/8" TEE/4"x4"x1/4" ANGLE MULLION
66	MULLION CLIP ANGLE	4" x 6" x 3/8" x 7 1/2" LG. COPED CLIP 6061-T6 ALUMINUM - 2"x4"x1/8" TEE/4"x4"x1/4" ANGLE MULLION ALT.
67	MULLION CLIP ANGLE	4" x 4" x 3/8" x 6 5/8" LG. CLIP 6061-T6 ALUMINUM - 8" CHANNEL SPLICE
68	MULLION CLIP ANGLE	4" x 6" x 3/8" x 10 1/2" LG. COPED CLIP 6061-T6 ALUMINUM - 8" CHANNEL SPLICE ALT.
80	STEEL STUD	16 GA MINIMUM GALVANIZED STRUCTURAL STEEL STUD
81	STRUCTURAL STEEL	3/16" THK MIN.
82	ALUMINUM PLATE	1/8" MINIMUM
83	CONCRETE	2000 LB MIN. CONCRETE
84	CMU	GROUT FILLED CONCRETE MASONRY UNIT
85	WOOD	G = 0.42 MINIMUM
100	1/4-14 SCREW	THREAD FORMING OR SELF DRILL S.S FOR ALUM. PLATED CARBON STEEL FOR 16 GA STEEL STUD, SPACING DETERMINRD BY CLIP LAYOUT
104	3/8" NUT AND BOLT	3/8 - 13 S.S. ALLOY GROUP 1, 2, OR 3 CONDITION CW WITH LOCK WASHER
106	1/2" NUT AND BOLT	1/2 - 13 S.S. ALLOY GROUP 1, 2, OR 3 CONDITION CW WITH LOCK WASHER
108	1/4-20 x 1" SCREW	STAINLESS STEEL THREAD CUTTING F POINT PILOT HOLE .228 - No 1 DRILL SPACED 3 1/4 INCHES
110	1/4-20 BOLT, NUT & WASHER	1/4-20 SS NUT, BOLT AND LOCKWASHER SPACING VARIES
112	#12 SCREW	#12-24 x 1 1/2" S.S. TEK SCREW ALLOY GROUP 1, 2, OR 3

PRODUCT REVISED
as complying with the Florida
Building Code
Acceptance No 11-1212.07
Expiration Date 06/16/2016
By
Miami Dade Product Control

RICE
ENGINEERING
105 School Creek Trail
Luxemburg, WI 54217
Phone 920.845 1042
Fax 920.845 1048
www.rice-inc.com

Florida Firm No: F-01000005061
Certificate of Authorization: #9090
L. David Rice
Registration No: 50923

L. DAVID RICE
LICENSE
No. 50923
STATE OF
FLORIDA
PROFESSIONAL ENGINEER

REVISION: I 05-24-11
DATE: 12-03-10
SHEET: 6 OF 12
DRW NO : RD-1140

PROJECT: DC-4174
TITLE: SUBMITTAL DRAWINGS
SCALE: 1/2" = 1'-0"
DRW BY: R. GEIST

Construction Specialties™
49 MEEKER AVENUE, CRANFORD, NEW JERSEY
PHONE: 1-800-631-7379 / FAX: 908-272-5844

DEC 0 6 2011

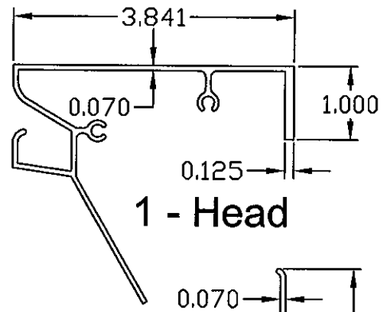

1 - Head

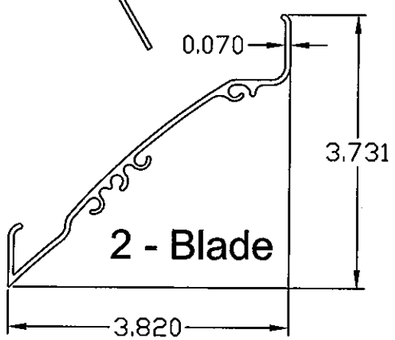

2 - Blade

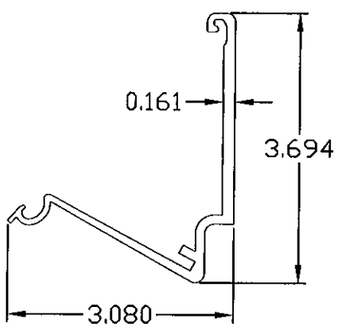

3 - Blade Brace

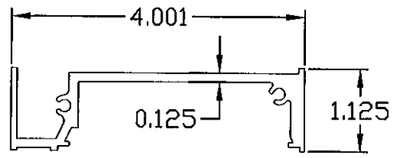

5 - Jamb

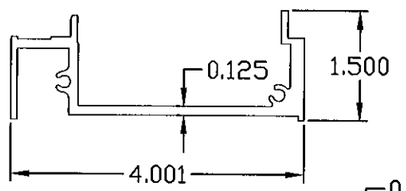

6 - Mullion

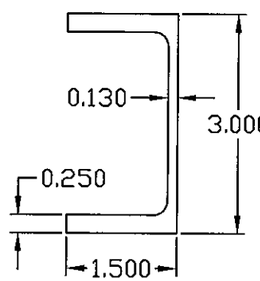

40 - 3" channel

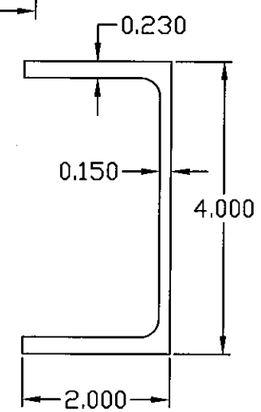

41 - 4" channel

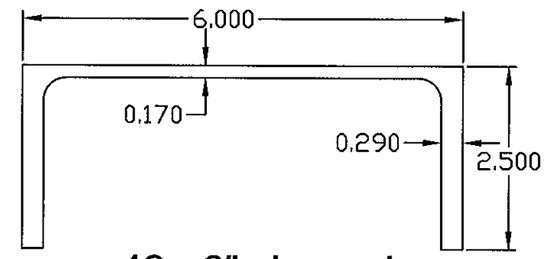

42 - 6" channel

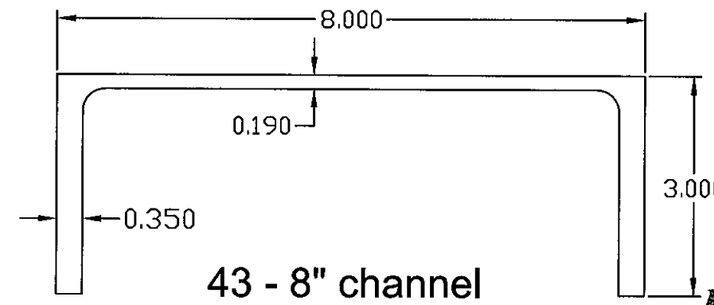

43 - 8" channel

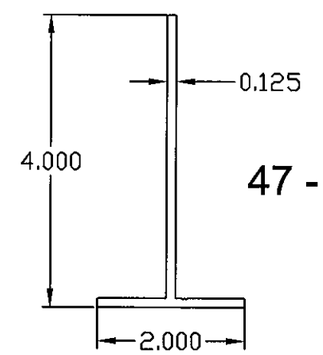

47 - Mullion Tee

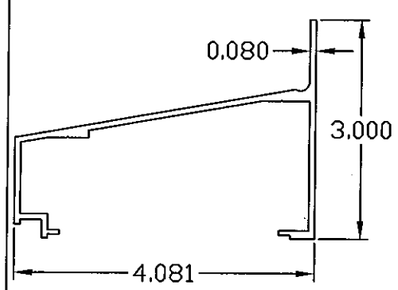

4 - Sill

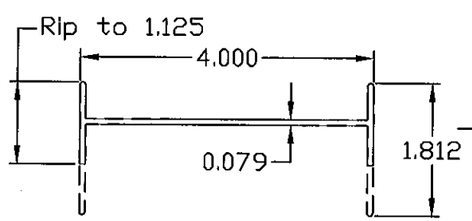

8 - Head for round shapes only

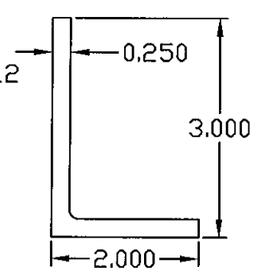

44 - Cont. mullion angle

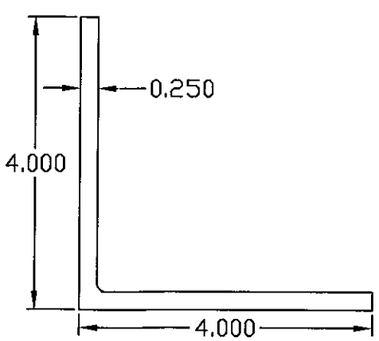

45 - Cont. mullion angle

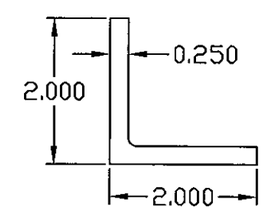

46 - Blade Brace Carrier

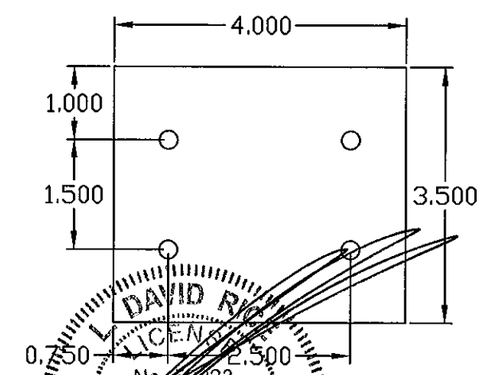

48 - Slip Plate

PRODUCT REVISED
as complying with the Florida Building Code
Acceptance No 11-1212.07
Expiration Date 06/16/2016
By
Miami Dade Product Control

RICE ENGINEERING
105 School Creek Trail
Luxemburg, WI 54217
Phone 920.845.1042
Fax 920.845.1048
www.rice-inc.com
Florida Firm No. F-01000005061
Certificate of Authorization: #9090
L. David Rice
Registration No: 50923

L. DAVID RICE
LICENSE No. 50923
STATE OF FLORIDA
PROFESSIONAL ENGINEER

DEC 0 6 2011

PROJECT: DC-4174
REVISION: 1 05-24-11
TITLE: SUBMITTAL DRAWINGS
DATE: 12-03-10
SCALE: 1/2" = 1'-0"
SHEET: 7 OF 12
DRW BY: R. GEIST
DRW NO: RD-1140

Construction Specialties™
49 MEEKER AVENUE, CRANFORD, NEW JERSEY
PHONE: 1-800-631-7379 / FAX: 908-272-5844

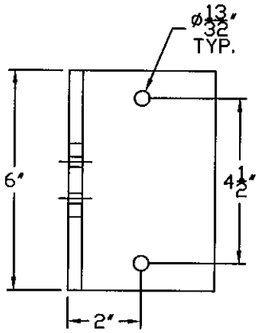

#58
CLIP ANGLE
BOLT PATTERN B

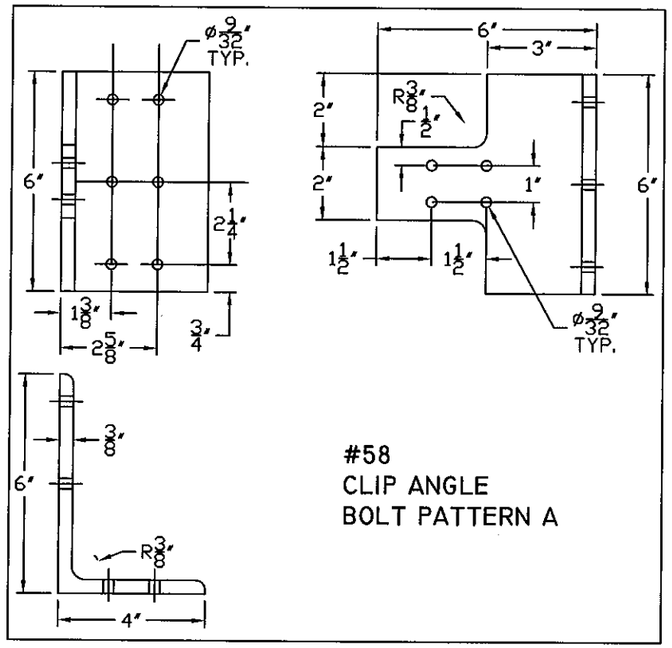

#58
CLIP ANGLE
BOLT PATTERN A

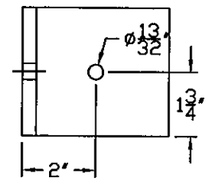

#59
CLIP ANGLE
BOLT PATTERN B

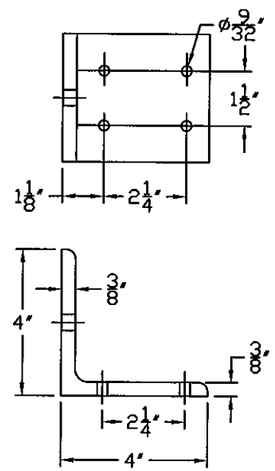

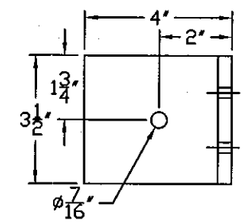

#59
CLIP ANGLE
BOLT PATTERN A

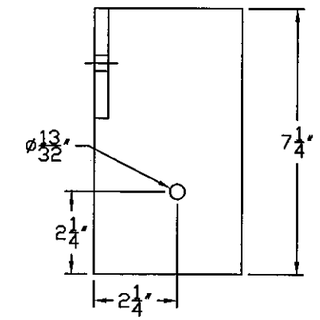

#60
CLIP ANGLE
BOLT PATTERN B

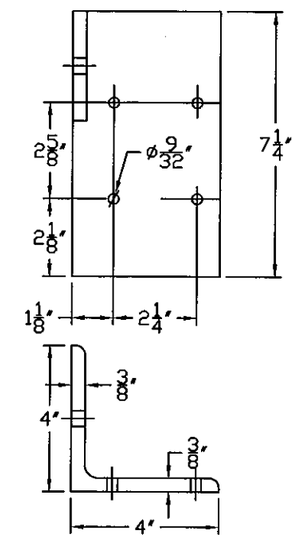

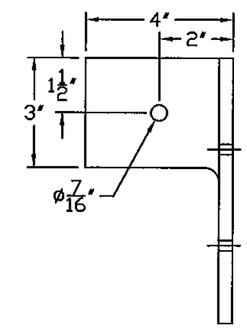

#60
CLIP ANGLE
BOLT PATTERN A

PRODUCT REVISED
as complying with the Florida
Building Code
Acceptance No 11-1212.07
Expiration Date 06/16/2016
By
Miami Dade Product Control

RICE ENGINEERING

105 School Creek Trail
Luxemburg, WI 54217
Phone 920.845.1042
Fax 920.845.1048
www.rice-inc.com

Florida Firm No. F-01000005061
Certificate of Authorization #9090
L. David Rice
Registration No: 50923

L. DAVID RICE
LICENSE
No. 50923
STATE OF FLORIDA
PROFESSIONAL ENGINEER

MULLION CLIP FASTENERS SAMPLE 4

Clip ID Number	Number of clips required	Support	Wood	Cold formed steel, minimum 16 gauge	Structural steel - minimum 3/16	Aluminum Minimum 1/8"	Aluminum or Structural Steel - Tapped or with nuts and bolts minimum 1/4" thick	2000* PSI Concrete or Concrete filled CMU	4000 psi concrete
			Bolt pattern A	Bolt pattern A	Bolt pattern A	Bolt pattern A	Bolt pattern B	Bolt pattern B	Bolt pattern B
58	1 per connection	Standard mullion	1/4 lag bolts embeded 2 1/4" with 1 inch edge distance	1/4 - 14 thread forming or self drilling coated carbon steel or SS screw min 3/8" edge distance	1/4 - thread forming or self drilling coated carbon steel or SS screw	1/4 - 14 thread forming or self drilling coated carbon steel or SS screw minimum 1/2" edge distance	3/8 - 16 plated carbon steel or Condition CW SS bolts	3/8" Hilti KB 3 carbon steel or SS with minimum edge distance of 4", embedded minimum of 3 1/2"	Hilti HIT-RE 500 3/8 with threaded rod for reverse clip Installation with minimum edge distance of 3 1/2", embedded minimum of 3 3/8"
59	1 per connection	4 inch channel splice	1/4 X 3 lag bolts with 1 inch edge distance	1/4 - 14 thread forming or self drilling coated carbon steel or SS screw min edge dist 3/8"	1/4 thread forming or self drilling coated carbon steel or SS screw mi edge distance 3/8"	1/4 - 14 thread forming or self drilling coated carbon steel or SS screw Min edge distance 1/2"	3/8 - 16 plated carbon steel or Condition CW SS bolts	3/8" Hilti KB 3 carbon steel or SS with minimum edge distance of 4 1/2", embedded minimum of 2 1/2"	Hilti HIT-RE 500 3/8 and threaded rod with minimum edge distance of 3 ", embedded minimum of 3 3/8"
60	1 per connection	4 inch channel splice	1/4 X 3 lag bolts with 1 inch edge distance	1/4 - 14 thread forming or self drilling coated carbon steel or SS screw	1/4 thread forming or self drilling coated carbon steel or SS screw min edge distance 3/8"	1/4 - thread forming or self drilling coated carbon steel or SS screw min edge ditance 1/2"	3/8 - 16 plated carbon steel or Condition CW SS bolts	3/8" Hilti KB 3 carbon steel or SS with minimum edge distance of 2 1/4", embedded minimum of 2 1/2"	Hilti HIT-RE 500 + HAS 3/8 and rod with minimum edge distance of 2" embedded minimum of 3 3/8"

*Any fastener rated for 2000 psi concrete can be used in 4000 psi concrete

DEC 0 6 2011

REVISION: 1	05-24-11
DATE: 12-03-10	
SHEET: 8 OF 12	
DRW NO.: RD-1140	
PROJECT: DC-4174	
TITLE: SUBMITTAL DRAWINGS	
SCALE: 3" = 1'-0"	
DRW BY: R. GEIST	

Construction Specialties
49 MEEKER AVENUE, CRANFORD, NEW JERSEY
PHONE: 1-800-631-7379 / FAX: 908-272-5844

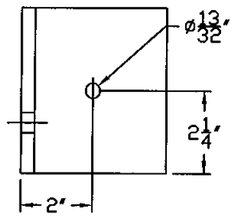

#61
CLIP ANGLE
BOLT PATTERN B

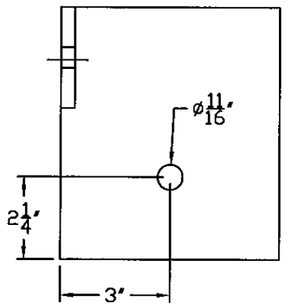

#62
CLIP ANGLE
BOLT PATTERN B

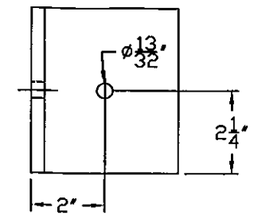

#63
CLIP ANGLE
BOLT PATTERN B

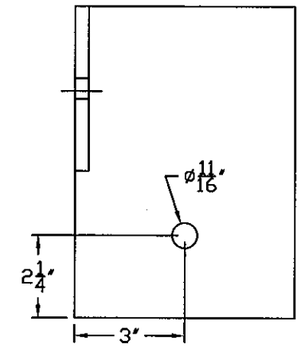

#64
CLIP ANGLE
BOLT PATTERN B

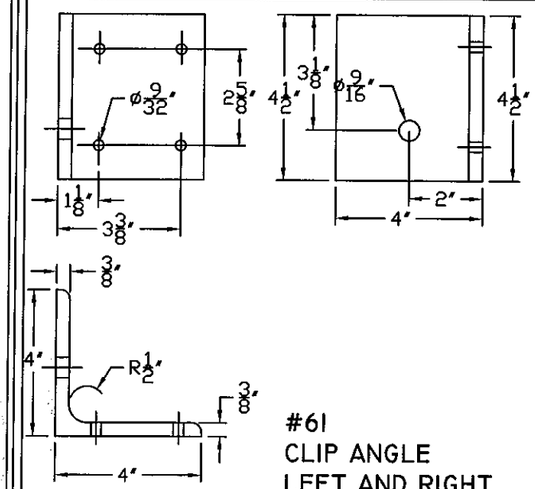

#61
CLIP ANGLE
LEFT AND RIGHT
REQUIRED
BOLT PATTERN A

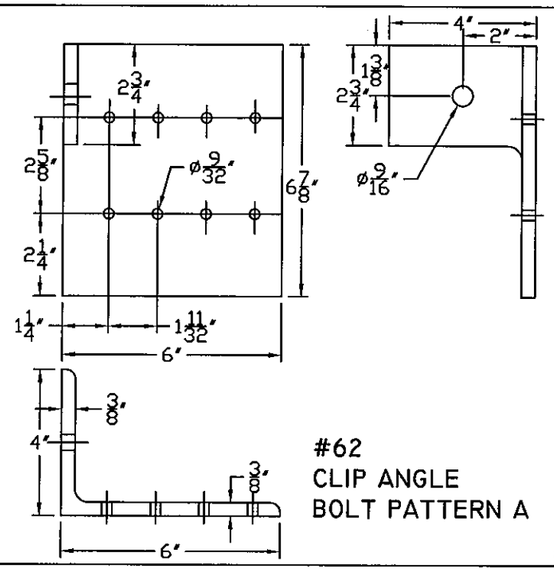

#62
CLIP ANGLE
BOLT PATTERN A

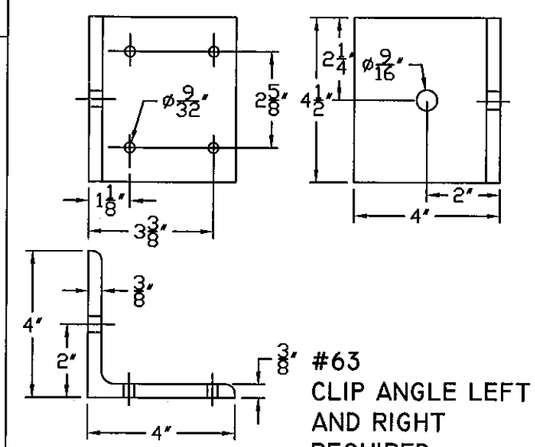

#63
CLIP ANGLE LEFT
AND RIGHT
REQUIRED
BOLT PATTERN A

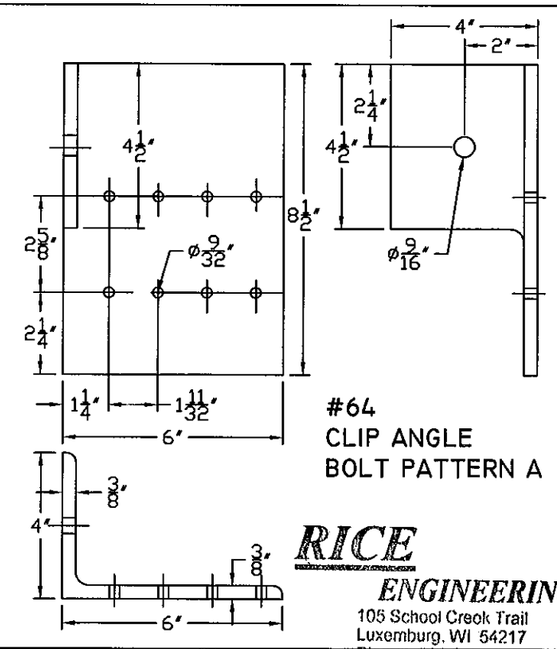

#64
CLIP ANGLE
BOLT PATTERN A

PRODUCT REVISED
as complying with the Florida Building Code
Acceptance No 11-1212.07
Expiration Date 06/16/2016
By
Miami-Dade Product Control

RICE
ENGINEERING
105 School Creek Trail
Luxemburg, WI 54217
Phone 920.845 1042
Fax: 920.845 1048
www.rice-inc.com
Florida Firm No: F-01000005061
Certificate of Authorization: #9090
L. David Rice
Registration No: 50923

MULLION CLIP FASTENERS SAMPLE 5

Clip ID Number	Number of clips required	Support	Wood	Cold formed steel, minimum 16 gauge	Structural steel - minimum 3/16 thick	Aluminum Minimum 1/8"	1/4: Aluminum or Structural Steel - Tapped or with nuts and bolts	2000* PSI Concrete or Concrete filled CMU	4000 psi concrete
			Bolt pattern A	Bolt pattern A	Bolt pattern A	Bolt pattern A	Bolt pattern B	Bolt pattern B	Bolt pattern B
61	left and right required	4x2 Tee & 2 X 3 X 1/4 angle reinforced mullion	1/4 lag bolts embeded 2 1/2" with 1 min inch edge distance	1/4 - 14 self drilling coated carbon steel screw with 3/8" min edge dist.	1/4 thread forming or self drilling coated carbon steel or SS screw 3/8" min edge dist	1/4 - 14 thread forming or self drilling coated carbon steel or SS screw with 1/2 min edge dist	3/8 - 16 plated carbon steel or Condition CW SS bolts	Hilti 3/8 KB 3 carbon steel or SS with minimum edge distance of 3", embedded minimum of 3 1/2"	Hilti HIT-RE 500 + HAS 3/8 threaded rod with minimum edge distance of 2 5/8", embedded minimum of 3 3/8"
62	1 per connection	4x2 Tee & 2 X 3 X 1/4 angle reinforced mullion	1/4 lag bolts embrded 2 1/2" with 1 inch edge distance	1/4 - 14 self drilling coated carbon steel screw with 3/8" min edge dist.	1/4 thread forming or self drilling coated carbon steel or SS screw min edge dist 3/8"	1/4 - 14 thread forming or self drilling coated carbon steel or SS screw Min edge dist 1/2"	5/8 -11 plated carbon steel or Condition CW SS bolts	Hilti 5/8 KB 3 with minimum edge distance of 4 1/2", embedded minimum of 4 "	Hilti HIT-RE 500 5/8 with threaded rod minimum edge distance of 3", embedded minimum of 2 7/8 "
63	left and right required	6 inch channel splice	1/4 X lag bolts embed 2 1/2"with 1 inch edge distance	1/4 - 14 self drilling coated carbon steel screw with 3/8" min edge dist.	1/4 thread forming or self drilling coated carbon steel or SS screw 3/8" min edge dist	1/4 - 14 thread forming or self drilling coated carbon steel or SS screw with 1/2 min edge dist	3/8 - 16 plated carbon steel or Condition CW SS bolts	Hilti 3 /8 KB 3 carbon steel or SS with minimum edge distance of 3", embedded minimum of 3 1/2"	Hilti HIT-RE 500 + HAS 3/8 + threaded rod with minimum edge distance of 3", embedded minimum of 3 3/8"
64	1 per connection	6 inch channel splice	1/4 lag bolts embeded 2 1/2" with 1 inch edge distance	1/4 - 14 self drilling coated carbon steel screw with 3/8" min edge dist.	1/4 thread forming or self drilling coated carbon steel or SS screw min edge dist 3/8"	1/4 - 14 thread forming or self drilling coated carbon steel or SS screw edge distance 1/2"	5/8" - 11 plated carbon steel or Condition CW SS bolts	Hilti 5/8" KB 3 with minimum edge distance of 4 1/2", embedded minimum of 4"	HIT-RE 500 5/8 with threaded rod minimum edge distance of 3", embedded minimum of 2 7/8 "

*Any fastener rated for 2000 psi concrete can be used in 4000 psi concrete

L. DAVID RICE
LICENSED
No. 50923
STATE OF FLORIDA
PROFESSIONAL ENGINEER

DEC 0 6 2011

REVISION: 1 05-24-11
DATE: 12-03-10
SHEET: 9 OF 12
DRW NO: RD-1140
PROJECT: DC-4174
TITLE: SUBMITTAL DRAWINGS
SCALE: 3" = 1'-0"
DRW BY: R. GEIST

Construction Specialties™
49 MEEKER AVENUE, CRANFORD, NEW JERSEY
PHONE: 1-800-631-7379 / FAX: 908-272-5844

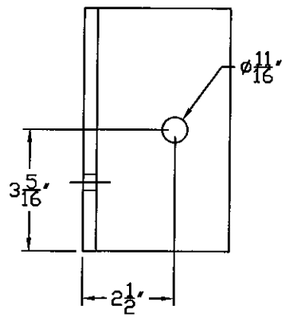

#65
CLIP ANGLE
BOLT PATTERN B

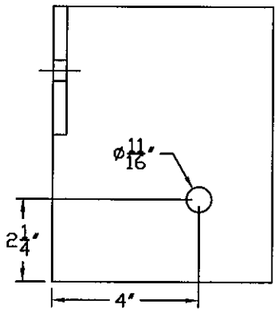

#66
CLIP ANGLE
BOLT PATTERN B

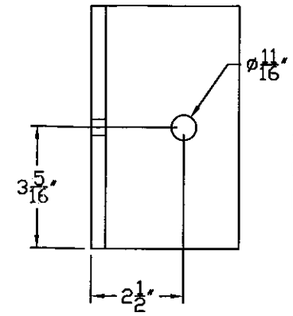

#67
CLIP ANGLE
BOLT PATTERN B

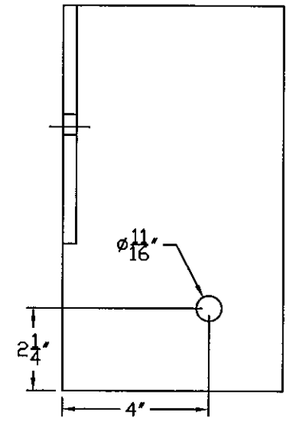

#68
CLIP ANGLE
BOLT PATTERN B

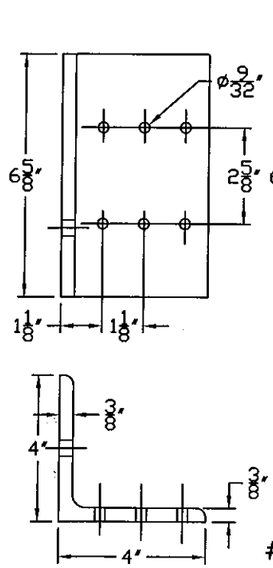

#65
CLIP ANGLE
LEFT AND RIGHT REQUIRED
BOLT PATTERN A

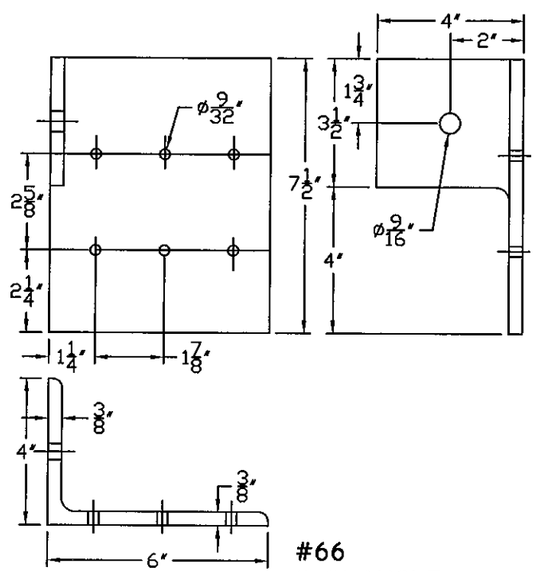

#66
CLIP ANGLE LEFT
AND RIGHT REQUIRED
BOLT PATTERN A

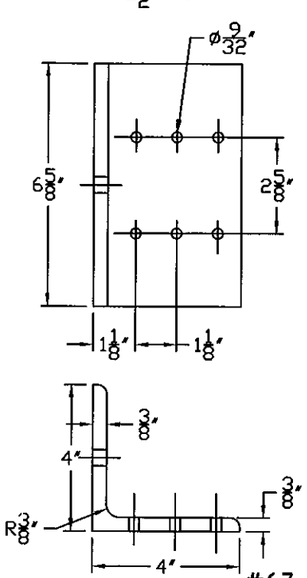

#67
CLIP ANGLE LEFT
AND RIGHT REQUIRED
BOLT PATTERN A

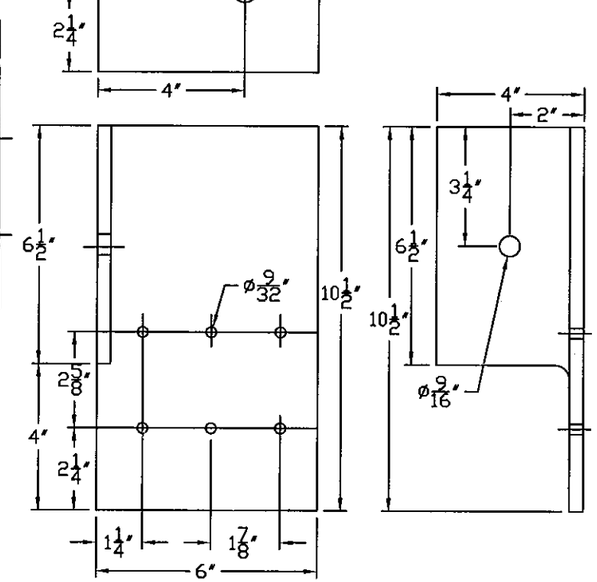

#68
CLIP ANGLE LEFT AND
RIGHT REQUIRED
BOLT PATTERN A

PRODUCT REVISED
as complying with the Florida
Building Code
Acceptance No 11-1212.07
Expiration Date 06/16/2016
By
Miami Dade Product Control

*Any fastener rated for 2000 psi concrete can be used in 4000 psi concrete

RICE ENGINEERING
105 Sawmill Creek Trail
Luxemburg, WI 54217
Phone: 920.845.1042
Fax: 920.845.1048
www.rice-inc.com
Florida Firm No: F-01000005061
Certificate of Authorization: #9090
L. David Rice
Registration No: 50923

MULLION CLIP FASTENERS SAMPLE 6

Clip ID Number	Number of clips required	Support	Wood	Cold formed steel, minimum 16 gauge	Structural steel - minimum 3/16	Aluminum Minimum 1/8"	Aluminum or Structural Steel - Tapped or with nuts and bolts min 1/4" thick	2000* PSI Concrete or Concrete filled CMU	4000 psi concrete
			Bolt pattern A	Bolt pattern A	Bolt pattern A	Bolt pattern A	Bolt pattern B	Bolt pattern B	Bolt pattern B
65	left and right required	4x2 Tee & 4 X 4 X 1/4 angle reinforced mullion	1/4 lag bolts embeded 2 1/2" with 1 inch edge distance	1/4 - 14 self drilling coated carbon steel or SS screw min edge dist 3/8"	1/4 self drilling coated carbon steel or SS screw minimum edge dist 3/8"	1/4 - 14 self drilling coated carbon steel or SS screw min edge dist 1/2"	5/8 - 11 plated carbon steel or Condition CW SS bolts	Hilti 5/8 KB 3 carbon steel or SS with minimum edge distance of 7", embedded minimum of 3"	Hilti HIT-RE 500 5/8 with threaded rod minimum edge distance of 4 1/2", embedded minimum of 2 7/8"
66	left and right required	4x2 Tee & 4 X 4 X 1/4 angle reinforced mullion	1/4" lag bolts embeded 2 1/2" with 1 inch edge distance	1/4 - 14 self drilling coated carbon steel or SS screw min edge dist 3/8"	1/4 self drilling coated carbon steel or SS screw min edge distance 3/8"	1/4 - 14 self drilling coated carbon steel or SS screw min edge distance 1/2"	5/8" - 11 plated carbon steel or Condition CW SS bolts	Hilti 5/8 KB 3 carbon steel or SS with minimum edge distance of 4 1/4", embedded minimum of 4"	Hilti HIT-RE 500 + 5/8 with threaded rod minimum edge distance of 3", embedded minimum of 2 7/8"
67	left and right required	8 inch channel splice	1/4 lag bolts embed 2 1/2 with 1 inch edge distance	1/4 - 14 self drilling coated carbon steel or SS screw min edge dist 3/8"	1/4 self drilling coated carbon steel or SS screw minimum edge dist 3/8"	1/4 - 14 self drilling coated carbon steel or SS screw min edge dist 1/2"	5/8 - 11 plated carbon steel or Condition CW SS bolts	Hilti 5/8 KB 3 carbon steel or SS with minimum edge distance of 7", embedded minimum of 3"	Hilti HIT-RE 500 5/8 with threaded rod minimum edge distance of 4 1/2", embedded minimum of 2 7/8"
68	left and right required	8 inch channel splice	1/4 lag bolts embeded 2 1/2" with 1 inch edge distance	1/4 - 14 self drilling coated carbon steel or SS screw min edge dist 3/8"	1/4 self drilling coated carbon steel or SS screw minimum edge dist 3/8"	1/4 - 14 self drilling coated carbon steel or SS screw min edge dist 1/2"	5/8 - 11 plated carbon steel or Condition CW SS bolts	Hilti 5/8 KB 3 carbon steel or SS with minimum edge distance of 4 1/4", embedded minimum of 4"	Hilti HIT-RE 500 + 5/8 with threaded rod minimum edge distance of 3", embedded minimum of 2 7/8"

L. DAVID RICE
LICENSE
No. 50923
STATE OF FLORIDA
PROFESSIONAL ENGINEER

DEC 0 6 2011

REVISION: 1 05-24-11
DATE: 12-03-10
SHEET: 10 OF 12
DRW NO: RD-1140
PROJECT: DC-4174
TITLE: SUBMITTAL DRAWINGS
SCALE: 3" = 1'-0"
DRW BY: R. GEIST

Construction Specialties
49 MEEKER AVENUE, CRANFORD, NEW JERSEY
PHONE: 1-800-631-7379 / FAX: 908-272-5844

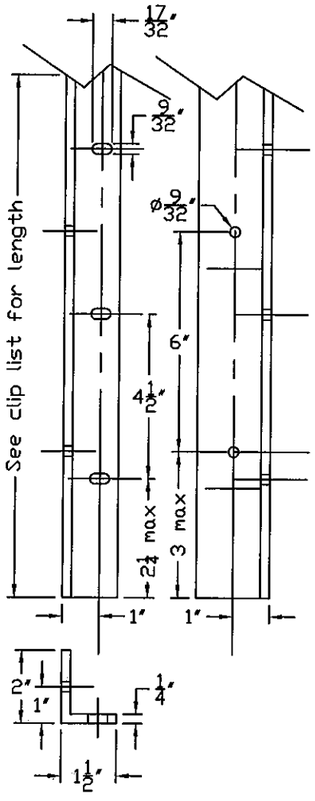

NO 54 CLIP

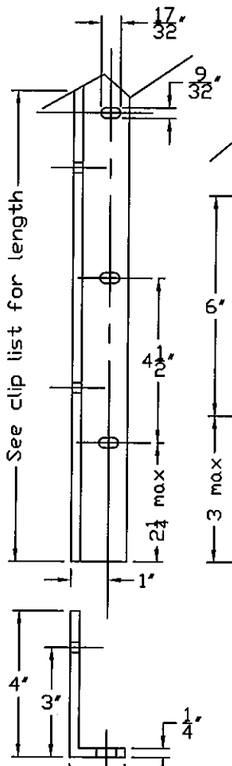

NO 56 CLIP

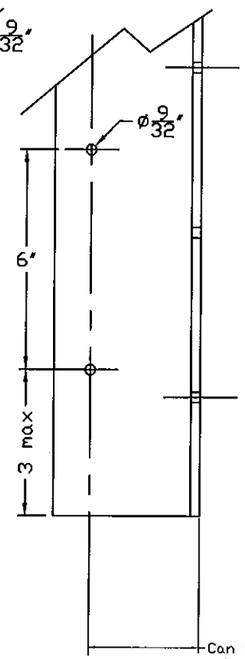

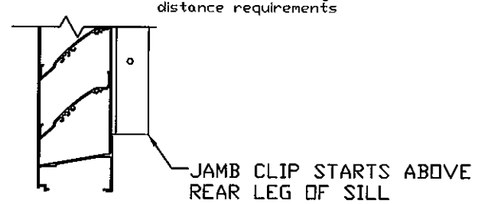

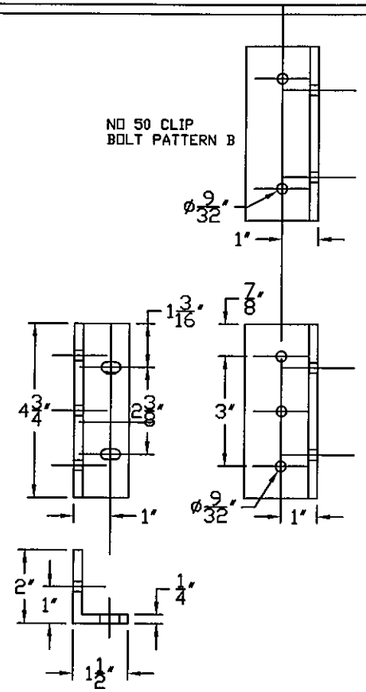

NO 50 CLIP BOLT PATTERN A

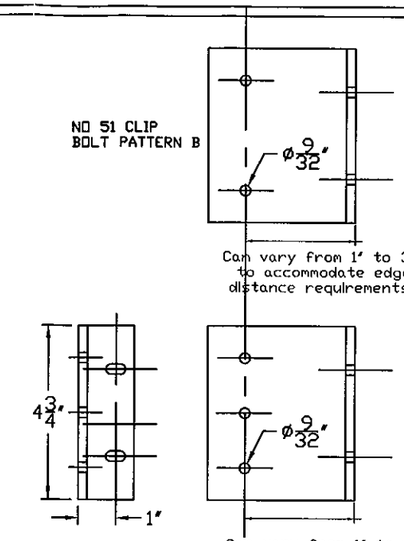

NO 51 CLIP BOLT PATTERN A

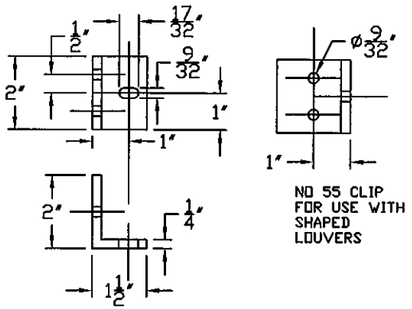

NO 55 CLIP FOR USE WITH SHAPED LOUVERS

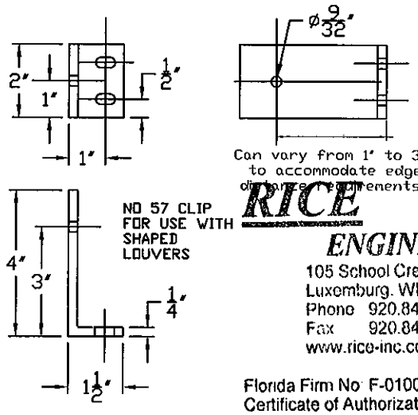

NO 57 CLIP FOR USE WITH SHAPED LOUVERS

PRODUCT REVISED
as complying with the Florida Building Code
Acceptance No 11-1212.07
Expiration Date 06/10/2016
By
Miami Dade Product Control

RICE ENGINEERING
105 School Creek Trail
Luxemburg, WI 54217
Phone 920.845.1042
Fax 920.845.1048
www.rice-inc.com

Florida Firm No F-01000005061
Certificate of Authorization: #9090
L. David Rice
Registration No: 50923

SHAPED LOUVER CLIP FASTENERS FOR ATTACHMENT TO BUILDINGS

Clip ID Number	Wood	Cold formed steel - minimum 16 gauge	Structural steel - minimum 3/16	Aluminum - minimum 1/8"	2000/4000 PSI Concrete or Concrete filled CMU
55	1/4 X 3 lag bolts coated carbon steel or stainless steel. Clips on 4 3/8" centers.	1/4-14 thread forming or self drilling coated carbon steel or SS screw. Clips on 4 3/8" centers.	1/4 - 20 thread forming or self drilling coated carbon steel or SS screw or 1/4-20 bolt. Clips on 7 " centers.	1/4 -14 thread forming or self drilling coated carbon steel or SS screw or 1/4-20 bolt. Clips on 4 3/8 " centers.	1/4 dia Hilti KB III or equivelent coated steel or SS 2 inch min edge distance or 1/4 X 2 inch powers Tappers 3 inch minimum edge distance. Clips on 5 inch centers.
57					

STRAIGHT JAMB CLIP AND FASTENERS FOR ATTACHMENT TO SPECIFIED SUBSTRATES

Clip ID Number	Wood	Cold formed steel - minimum 16 gauge	Structural steel - minimum 3/16	Aluminum - minimum 1/8"	Concrete filled CMU	2000/4000 PSI Concrete
	Continuous Clip	Continuous Clip	Bolt pattern B	Bolt pattern A	Continuous Clip	Bolt pattern B
54	1/4 X 3 lag bolts coated carbon steel or stainless steel	1/4-14 thread forming or self drilling coated carbon steel or stainless steel screw			1/4 dia Hilti KB III or equivelent coated steel or SS with 3 1/2" inch min edge distance, or 1/4 X 2 inch Powers Tappers with 3 inch minimum edge distance	
56						
50 Installed 12" on center			1/4-20 thread forming or self drilling coated carbon steel screw. 1/4-20 SS bolt can be used with a nut & washer or by drilling and tapping the structural steel. Minimum 3/8" edge distance	1/4 " self threading or self drilling coated carbon steel or SS screw		1/4 " Coated carbon steel, Stainless steel Powers tappers, Hilti Tapcon or equivelent, 2 inches long with 3 inch edge distance.
51 Installed 12 " on center						

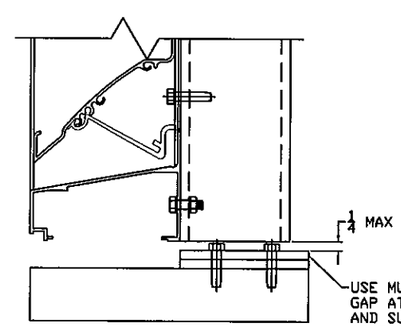

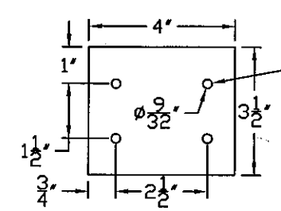

48 - Slip Plate

SEE SCHEDULE ABOVE FOR REQUIRED FASTENERS
USES SAME FASTENERS AS SHAPED LOUVER CLIPS

L. DAVID RICE
LICENSED
No 50923
STATE OF FLORIDA
PROFESSIONAL ENGINEER

DEC 0 6 2011

REVISION: 1	05-24-11
DATE: 12-03-10	
SHEET: 11 OF 12	
DRW NO : RD-1140	
PROJECT: DC-4174	
TITLE: SUBMITTAL DRAWINGS	
SCALE: 3" = 1'-0"	
DRW BY: R. GEIST	

Construction Specialties™
49 MEEKER AVENUE, CRANFORD, NEW JERSEY
PHONE: 1-800-631-7379 / FAX: 908-272-5844

1) Determine the required mullion spacing and louver height either from structural or architectural considerations.

2) Starting with Mullion Table 1, under the job wind load go down through the tables until the required opening height is found. The heading at the top of the table will indicate the detail to be used for the mullion. The same tables apply to visible or hidden mullions (splices). Once the required height has been found for the job windload, move left along the row to find the corresponding mullion/splice distance. This will give you your section height and width. Proceed to step 3 for any additional "stiffener" supports required.

3) From table 4, read the panel horizontal span (mullion spacing from Step 2) and read the number of stiffeners required under the design wind load. It may be necessary to change the mullion spacing if the allowable blade span falls out side the table values, if so go back and repeat step 2.

4) It is possible to start with the stiffener tables to find a panel width (mullion spacing) , and then go to the mullion tables to verify the mullion or chanel, detail and allowable height.

Mullion Table 1

ALLOWABLE HEIGHT FOR STANDARD MULLION DETAIL H/4 AND 4 INCH CHANNEL DETAILS J/4 - K/4

Panel span (in.) - from jamb to mullion or mullion to mullion	Wind Load PSF															
	20	30	40	50	60	70	80	90	100	110	120	130	140	150	160	170
24	8.5	8.5	8.5	8.5	8.5	8.5	8.5	8.5	8.0	7.2	6.6	6.1	5.7	5.3	5.0	4.7
30	8.5	8.5	8.5	8.5	8.5	8.5	8.0	7.1	6.4	5.8	5.3	4.9	4.6	4.3	4.0	3.8
36	8.5	8.5	8.5	8.5	8.5	7.6	6.6	5.9	5.3	4.8	4.4	4.1	3.8	3.5	3.3	3.1
42	8.5	8.5	8.5	8.5	7.6	6.5	5.7	5.1	4.6	4.1	3.8	3.5	3.3	3.0	2.8	2.7
48	8.5	8.5	8.5	8.0	6.6	5.7	5.0	4.4	4.0	3.6	3.3	3.1	2.8	2.7	2.5	2.3
54	8.5	8.5	8.5	7.1	5.9	5.1	4.4	3.9	3.5	3.2	3.0	2.7	2.5	2.4	2.2	2.1
60	8.5	8.5	8.0	6.4	5.3	4.6	4.0	3.5	3.2	2.9	2.7	2.5	2.3	2.1	2.0	1.9
66	8.5	8.5	7.2	5.8	4.8	4.1	3.6	3.2	2.9	2.6	2.4	2.2	2.1	1.9	1.8	
72	8.5	8.5	6.6	5.3	4.4	3.8	3.3	3.0	2.7	2.4	2.2	2.0	1.9	1.8		
78	8.5	8.2	6.1	4.9	4.1	3.5	3.1	2.7	2.5	2.2	2.0	1.9	1.8			
84	8.5	7.6	5.7	4.6	3.8	3.3	2.8	2.5	2.3	2.1	1.9	1.8				
90	8.5	7.1	5.3	4.3	3.5	3.0	2.7	2.4	2.1	1.9	1.8					
96	8.5	6.6	5.0	4.0	3.3	2.8	2.5	2.2	2.0	1.8						
102	8.5	6.3	4.7	3.8	3.1	2.7	2.3	2.1	1.9							
108	8.5	5.9	4.4	3.5	3.0	2.5	2.2	2.0	1.8							
114	8.4	5.6	4.2	3.4	2.8	2.4	2.1	1.9								
120	8.0	5.3	4.0	3.2	2.7	2.3	2.0	1.8								

Mullion Table 2

ALLOWABLE HEIGHT FOR REINFORCED MULLION 4 X 2 TEE WITH 2 X 3 X ¼ ANGLE DETAILS L/5 - M/5 AND 6 INCH CHANNEL DETAILS N/5 - P/5

Panel span (in.) - from jamb to mullion or mullion to mullion	Wind Load PSF															
	20	30	40	50	60	70	80	90	100	110	120	130	140	150	160	170
24	10.0	10.0	10.0	10.0	10.0	10.0	10.0	10.0	10.0	10.0	10.0	10.0	10.0	10.0	9.8	9.2
30	10.0	10.0	10.0	10.0	10.0	10.0	10.0	10.0	10.0	10.0	10.0	9.6	8.9	8.3	7.8	7.4
36	10.0	10.0	10.0	10.0	10.0	10.0	10.0	10.0	10.0	9.5	8.7	8.0	7.4	6.9	6.5	6.1
42	10.0	10.0	10.0	10.0	10.0	10.0	10.0	9.9	8.9	8.1	7.4	6.9	6.4	6.0	5.6	5.3
48	10.0	10.0	10.0	10.0	10.0	10.0	9.8	8.7	7.8	7.1	6.5	6.0	5.6	5.2	4.9	4.6
54	10.0	10.0	10.0	10.0	10.0	9.9	8.7	7.7	6.9	6.3	5.8	5.3	5.0	4.6	4.3	4.1
60	10.0	10.0	10.0	10.0	10.0	8.9	7.8	6.9	6.3	5.7	5.2	4.8	4.5	4.2	3.9	3.7
66	10.0	10.0	10.0	10.0	9.5	8.1	7.1	6.3	5.7	5.2	4.7	4.4	4.1	3.8	3.6	
72	10.0	10.0	10.0	10.0	8.7	7.4	6.5	5.8	5.2	4.7	4.3	4.0	3.7	3.5		
78	10.0	10.0	10.0	9.6	8.0	6.9	6.0	5.3	4.8	4.4	4.0	3.7	3.4			
84	10.0	10.0	10.0	8.9	7.4	6.4	5.6	5.0	4.5	4.1	3.7	3.4				
90	10.0	10.0	10.0	8.3	6.9	6.0	5.2	4.6	4.2	3.8	3.5					
96	10.0	10.0	9.8	7.8	6.5	5.6	4.9	4.3	3.9	3.6						
102	10.0	10.0	9.2	7.4	6.1	5.3	4.6	4.1	3.7							
108	10.0	10.0	8.7	6.9	5.8	5.0	4.3	3.9	3.5							
114	10.0	10.0	8.2	6.6	5.5	4.7	4.1	3.7								
120	10.0	10.0	7.8	6.3	5.2	4.5	3.9	3.5								

Mullion Table 3

ALLOWABLE HEIGHT FOR REINFORCED MULLION 4 X 2 TEE WITH 4 X 4 X ¼ ANGLE DETAILS Q/5 - R/5 AND 8 INCH CHANNEL DETAILS S/5 - T/5

Panel span (in.) - from jamb to mullion or mullion to mullion	Wind Load PSF															
	20	30	40	50	60	70	80	90	100	110	120	130	140	150	160	170
24	12.0	12.0	12.0	12.0	12.0	12.0	12.0	12.0	12.0	12.0	12.0	12.0	12.0	12.0	12.0	12.0
30	12.0	12.0	12.0	12.0	12.0	12.0	12.0	12.0	12.0	12.0	12.0	12.0	12.0	12.0	12.0	12.0
36	12.0	12.0	12.0	12.0	12.0	12.0	12.0	12.0	12.0	12.0	12.0	12.0	12.0	11.3	10.6	10.0
42	12.0	12.0	12.0	12.0	12.0	12.0	12.0	12.0	12.0	12.0	12.0	11.2	10.4	9.7	9.1	8.6
48	12.0	12.0	12.0	12.0	12.0	12.0	12.0	12.0	12.0	11.6	10.6	9.8	9.1	8.5	8.0	7.5
54	12.0	12.0	12.0	12.0	12.0	12.0	12.0	12.0	11.3	10.3	9.4	8.7	8.1	7.6	7.1	6.7
60	12.0	12.0	12.0	12.0	12.0	12.0	12.0	11.3	10.2	9.3	8.5	7.8	7.3	6.8	6.4	6.0
66	12.0	12.0	12.0	12.0	12.0	12.0	11.6	10.3	9.3	8.4	7.7	7.1	6.6	6.2	5.8	
72	12.0	12.0	12.0	12.0	12.0	12.0	10.6	9.4	8.5	7.7	7.1	6.5	6.1	5.7		
78	12.0	12.0	12.0	12.0	12.0	11.2	9.8	8.7	7.8	7.1	6.5	6.0	5.6			
84	12.0	12.0	12.0	12.0	12.0	10.4	9.1	8.1	7.3	6.6	6.1	5.6				
90	12.0	12.0	12.0	12.0	11.3	9.7	8.5	7.6	6.8	6.2	5.7					
96	12.0	12.0	12.0	12.0	10.6	9.1	8.0	7.1	6.4	5.8						
102	12.0	12.0	12.0	12.0	10.0	8.6	7.5	6.7	6.0							
108	12.0	12.0	12.0	11.3	9.4	8.1	7.1	6.3	5.7							
114	12.0	12.0	12.0	10.7	8.9	7.7	6.7	6.0								
120	12.0	12.0	12.0	10.2	8.5	7.3	6.4	5.7								

Stiffeners Table 4

NUMBER OF STIFFENERS REQUIRED FOR EACH PANEL

Panel Horizontal Span (in.) From Jamb to Jamb, Jamb to mullion or mullion to mullion	Wind Load Pounds Per Square Foot															
	20	30	40	50	60	70	80	90	100	110	120	130	140	150	160	170
24	0	0	0	0	0	0	0	0	0	0	0	0	0	0	0	0
30	0	0	0	0	0	0	0	0	0	0	0	0	0	0	0	0
36	0	0	0	0	0	0	0	0	0	0	0	0	0	1	1	1
42	0	0	0	0	0	0	0	0	0	0	1	1	1	1	1	1
48	0	0	0	0	0	0	0	1	1	1	1	1	1	1	1	1
54	0	0	0	0	0	1	1	1	1	1	1	1	1	1	1	1
60	0	0	0	0	1	1	1	1	1	1	1	1	1	1	1	1
66	0	0	0	1	1	1	1	1	1	1	1	1	1	1	1	
72	0	0	1	1	1	1	1	1	1	1	1	1	1	1		
78	0	0	1	1	1	1	1	1	1	1	1	1	1			
84	0	1	1	1	1	1	1	1	1	1	1	1				
90	0	1	1	1	1	1	1	1	1	1	1					
96	0	1	1	1	1	1	1	1	1	1						
102	1	1	1	1	1	1	1	1	1							
108	1	1	1	1	1	1	1	1	2							
114	1	1	1	1	1	1	1	2								
120	1	1	1	1	1	1	2	2								

PRODUCT REVISED
as complying with the Florida Building Code
Acceptance No 11-1212.07
Expiration Date 06/16/2016
By
Miami Dade Product Control

NOTE: Comparative analysis may be used to find values that fall between the values shown in tables 1, 2 or 3.

RICE ENGINEERING
105 School Creek Trail
Luxemburg, WI 54217
Phone 920.845.1042
Fax 920.845.1048
www.rice-inc.com

Florida Firm No F-01000005061
Certificate of Authorization: #9090
L. David Rice
Registration No: 50923

L. DAVID RICE
LICENSE
No. 50923
STATE OF FLORIDA
PROFESSIONAL ENGINEER

DEC 0 6 2011

REVISION: I 05-24-11
DATE: 12-03-10
SHEET: 12 OF 12
DRW NO : RD-1140
PROJECT: DC-4174
TITLE: SUBMITTAL DRAWINGS
SCALE: 3" = 1'-0"
DRW BY: R. GEIST

Construction Specialties™
49 MEEKER AVENUE, CRANFORD, NEW JERSEY
PHONE: 1-800-631-7379 / FAX: 908-272-5844