MIAMI-DADE COUNTY
DEPARTMENT OF PERMITTING, ENVIRONMENT, AND REGULATORY AFFAIRS (PERA)
BOARD AND CODE ADMINISTRATION DIVISION

MIAMI-DADE COUNTY
PRODUCT CONTROL SECTION
11805 SW 26 Street, Room 208
Miami, Florida 33175-2474
T (786) 315-2590 F (786) 315-2599
www.miamidade.gov/pera/

NOTICE OF ACCEPTANCE (NOA)

Trulite Window & Door Solutions, LLC
8130 NW 74th Avenue
Medley, FL 33166

SCOPE:

This NOA is being issued under the applicable rules and regulations governing the use of construction materials. The documentation submitted has been reviewed and accepted by Miami-Dade County PERA - Product Control Section to be used in Miami Dade County and other areas where allowed by the Authority Having Jurisdiction (AHJ).

This NOA shall not be valid after the expiration date stated below. The Miami-Dade County Product Control Section (In Miami Dade County) and/or the AHJ (in areas other than Miami Dade County) reserve the right to have this product or material tested for quality assurance purposes. If this product or material fails to perform in the accepted manner, the manufacturer will incur the expense of such testing and the AHJ may immediately revoke, modify, or suspend the use of such product or material within their jurisdiction. PERA reserves the right to revoke this acceptance, if it is determined by Miami-Dade County Product Control Section that this product or material fails to meet the requirements of the applicable building code.

This product is approved as described herein, and has been designed to comply with the Florida Building Code, including the High Velocity Hurricane Zone.

DESCRIPTION: Clipped, Extruded Aluminum Tube Mullion - L.M.I.

APPROVAL DOCUMENT: Drawing No.**M95-06A**, titled "Aluminum Tube Mullions", sheets 1 through 6 of 6, prepared by Al Farooq Corporation, dated 11/20/95, with revision F dated 11/18/11, signed and sealed by Javad Ahmad, P.E., bearing the Miami-Dade County Product Control Revision stamp with the Notice of Acceptance number and expiration date by the Miami-Dade County Product Control Section.

MISSILE IMPACT RATING: Large and Small Missile Impact Resistant

LABELING: Each unit shall bear a permanent label with the manufacturer's name or logo, city, state, model/series, and following statement: "Miami-Dade County Product Control Approved", unless otherwise noted herein.

RENEWAL of this NOA shall be considered after a renewal application has been filed and there has been no change in the applicable building code negatively affecting the performance of this product.

TERMINATION of this NOA will occur after the expiration date or if there has been a revision or change in the materials, use, and/or manufacture of the product or process. Misuse of this NOA as an endorsement of any product, for sales, advertising or any other purposes shall automatically terminate this NOA. Failure to comply with any section of this NOA shall be cause for termination and removal of NOA.

ADVERTISEMENT: The NOA number preceded by the words Miami-Dade County, Florida, and followed by the expiration date may be displayed in advertising literature. If any portion of the NOA is displayed, then it shall be done in its entirety.

INSPECTION: A copy of this entire NOA shall be provided to the user by the manufacturer or its distributors and shall be available for inspection at the job site at the request of the Building Official.

This NOA **revises and renews NOA # 10-0930.06** and consists of this page 1 and evidence pages E-1 and E-2, as well as approval document mentioned above.

The submitted documentation was reviewed by **Manuel Perez, P.E.**

MIAMI-DADE COUNTY APPROVED

NOA No. 11-1213.07
Expiration Date: December 24, 2016
Approval Date: February 02, 2012

Trulite Window & Door Solutions, LLC

NOTICE OF ACCEPTANCE: EVIDENCE SUBMITTED

A. **DRAWINGS**

1. Manufacturer's die drawings and sections.
2. Drawing No.**M95-06A**, titled "Aluminum Tube Mullions", sheets 1 through 6 of 6, prepared by Al Farooq Corporation, dated 11/20/95, with revision F dated 11/18/11, signed and sealed by Javad Ahmad, P.E.

B. **TESTS**

1. Test reports on: 1) Large Missile Impact Test per FBC, TAS 201-94
   2) Cyclic Wind Pressure Loading per FBC, TAS 203-94
   along with marked-up drawings and installation diagram of 2 mulled fixed frame windows, O-O configuration, prepared by Fenestration Testing Laboratory, Inc., Test Report No. **FTL-6600**, dated 08/30/11, signed and sealed by Marlin D. Brinson, P.E.
2. Test reports on: 1) Large Missile Impact Test per FBC, TAS 201-94
   2) Cyclic Wind Pressure Loading per FBC, TAS 203-94
   along with marked-up drawings and installation diagram of 3 mulled fixed frame windows, O-O/O configuration, prepared by Fenestration Testing Laboratory, Inc., Test Report No. **FTL-3284**, dated 02/01/02, signed and sealed by Luis Antonio Figueredo, P.E.
   (Submitted under previous NOA #02-0227.01)
3. Test reports on: 1) Uniform Static Air Pressure Test, Loading per PA 202-94 along with installation diagram of window prepared by Fenestration Testing Laboratory, Inc., Test Report No. **FTL-1297**, dated 09/21/95 signed and sealed by Yamil Gerardo Kuri, P.E.
   (Submitted under previous NOA #95-0515.09)

C. **CALCULATIONS**

1. Anchor verification calculations and structural analysis, complying with FBC-2007 and FBC-2010, prepared by Al-Farooq Corporation, dated 05/09/09 and revised on 11/16/11, signed and sealed by Javad Ahmad, P.E.
2. Glazing complies with ASTM E1300-04

D. **QUALITY ASSURANCE**

1. Miami-Dade Department of Permitting, Environment, and Regulatory Affairs (PERA).

E. **MATERIAL CERTIFICATIONS**

1. None.

Manuel Perez, P.E.
Product Control Examiner
NOA No. 11-1213.07
Expiration Date: December 24, 2016
Approval Date: February 02, 2012

NOTICE OF ACCEPTANCE: EVIDENCE SUBMITTED

F. STATEMENTS

1. Statement letter of conformance, complying with FBC-2010, and of no financial interest, dated November 16, 2011, signed and sealed by Javad Ahmad, P.E.
2. Florida Dept of State, listing of Trulite Window & Door Solution, LLC (Foreign Limited Liability Co.), managed by Arch Intermediate Holding, LLC, Tamarac, Fl., dated 02/03/10
3. Certificate of registration of name change from "Trulite Residential Windows, LLC" to " Trulite Window & Door Solution, LLC" issued by State of Delaware on 17/10/11, signed by J.W. Bullock.
4. Certificate of registration of name change from "Arch Windows, LLC" to Trulite Residential Windows, LLC" issued by State of Delaware on 07/27/11, signed by J.W. Bullock.
5. Florida Dept of State, listing of Arch Window, LLC (Foreign Limited Liability Co.), managed by Arch Intermediate Holding, LLC, Tamarac, Fl.(transferred from file # 10-0930.07).
6. Certificate of registration of Arch Windows, LLC (Delaware) in State of Florida dated 02/04/10, managed by Arch Intermediate Holding, LLC (transferred from file # 10-0930.07).

G. OTHER

1. Notice of Acceptance No. **10-0930.06**, issued to Arch Windows, LLC dba AWP for their "Aluminum Tube Mullion – L.M.I.", approved on 01/06/11 and expiring on 12/24/11.

Manuel Perez, P.E.
Product Control Examiner
NOA No. 11-1213.07
Expiration Date: December 24, 2016
Approval Date: February 02, 2012

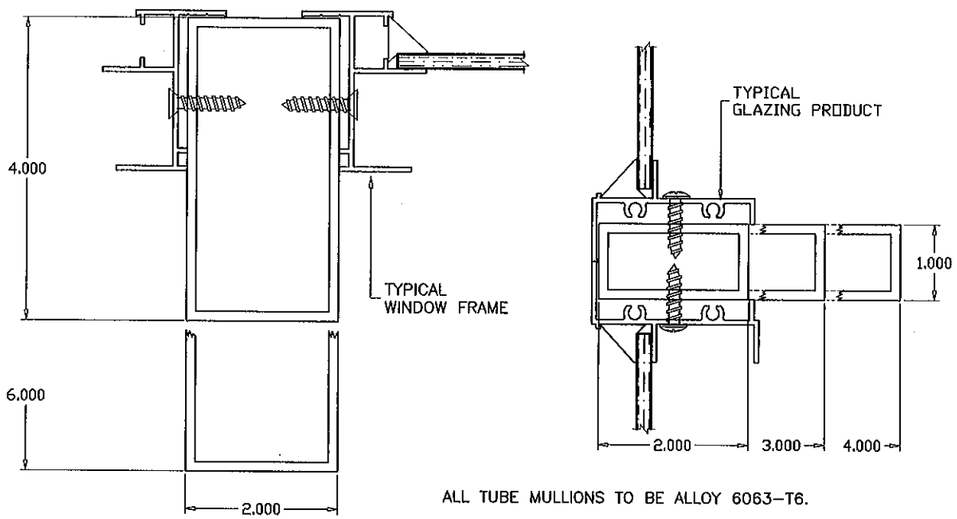

ALL TUBE MULLIONS TO BE ALLOY 6063–T6.

MULLIONS CONTAINING TYPICAL GLAZING PRODUCTS HORIZONTAL OR VERTICAL

SEE WINDOW OR DOOR APPROVAL FOR FASTENERS SIZES AND SPACING

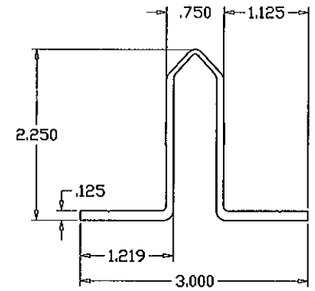

MULLION CLIP (YE–65) (6063–T6)

(ALT. TO ANGLES)

CLIP LENGTHS MUST BE CUT TO FIT SNUG INTO TUBE MULLIONS.

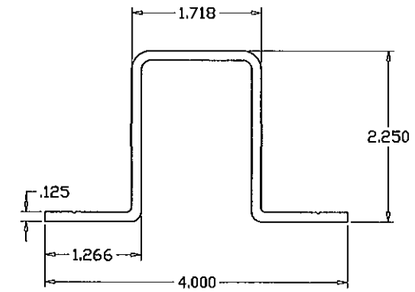

MULLION CLIP (6063–T5)

(ALT. TO ANGLES)

CLIP LENGTHS MUST BE CUT TO FIT SNUG INTO TUBE MULLIONS.

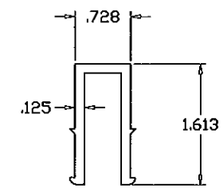

MULLION CLIP (6063–T5)

CLIP LENGTHS MUST BE CUT TO FIT SNUG INTO TUBE MULLIONS.
(NO SIDE FASTENERS REQD.)

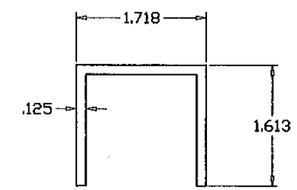

MULLION CLIP (6063–T5)

CLIP LENGTHS MUST BE CUT TO FIT SNUG INTO TUBE MULLIONS.
(NO SIDE FASTENERS REQD.)

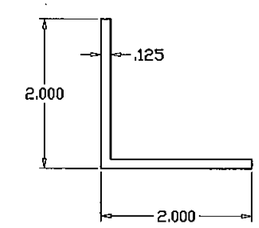

ANGLE CLIP (6063–T5)

RECTANGULAR ALUMINUM TUBE MULLIONS USING MULLION PROPERTIES ONLY

NOTES:

THIS PRODUCT HAS BEEN DESIGNED AND TESTED TO COMPLY WITH THE REQUIREMENTS OF THE FLORIDA BUILDING CODE 2010 EDITION INCLUDING HIGH VELOCITY HURRICANE ZONE (HVHZ).

ALL GLAZING PRODUCTS USED WITH THESE MULLIONS MUST MEET THE APPLICABLE BUILDING CODE REQUIREMENTS I.E: WIND LOAD, WATER INFILTRATION, FORCED ENTRY RESISTANCE, SAFEGUARDS ETC.

WOOD BUCKS BY OTHERS, MUST BE ANCHORED PROPERLY TO TRANSFER LOADS TO THE STRUCTURE.

ANCHORS SHALL BE AS LISTED, SPACED AS SHOWN ON DETAILS, EMBEDMENT TO BASE MATERIAL SHALL BE BEYOND WALL COVERING (STUCCO, TILE ETC.).

ANCHORING CONDITIONS OTHER THAN THOSE SHOWN IN THESE DETAILS ARE NOT PART OF THIS APPROVAL.

A LOAD DURATION INCREASE IS USED IN DESIGN OF ANCHORS INTO WOOD ONLY.

MATERIALS INCLUDING BUT NOT LIMITED TO STEEL/METAL SCREWS, THAT COME INTO CONTACT WITH OTHER DISSIMILAR MATERIALS SHALL MEET THE REQUIREMENTS OF 2010 FLORIDA BLDG. CODE SECTION 2003.8.4.

MULLION SYSTEM IS RATED FOR LARGE MISSILE IMPACT. AND CAN BE USED WITH ALL MIAMI–DADE COUNTY APPROVED IMPACT AND NON–IMPACT RESISTANT PRODUCTS.

INSTRUCTIONS:

USE CHARTS AND GRAPHS AS FOLLOWS.

STEP 1 DETERMINE DESIGN LOAD REQUIRED PER ASCE 7 FOR PARTICULAR OPENING.

STEP 2 USE APPROVED GLAZING PRODUCTS MEETING ABOVE LOAD REQUIREMENTS.

STEP 3 USE CONNECTION TO MULLION AS PER PRODUCT APPROVAL.

STEP 4 USING CHARTS ON SHEET 2 SELECT MULLION SIZE WITH DESIGN RATING MORE THAN DESIGN LOAD SPECIFIED IN STEP 1 ABOVE.

STEP 5 USING ANCHOR TYPES ON SHEET 4 THRU 6 AND ANCHOR CHARTS ON SHEET 3, SELECT ANCHOR TYPE WITH DESIGN RATING MORE THAN THE DESIGN LOADS SPECIFIED IN STEP 1 ABOVE.

Engr: JAVAD AHMAD
CIVIL
FLA. PE # 70592
C.A.N. 3538

NOV 22 2011

PRODUCT REVISED
as complying with the Florida Building Code
Acceptance No 11-1213.07
Expiration Date Dec. 24, 2016
By Manuel Diaz
Miami-Dade Product Control

AL-FAROOQ CORPORATION
ENGINEERS & PRODUCT DEVELOPMENT
1235 S.W. 87 AVE
MIAMI, FLORIDA 33174
TEL. (305) 264-8100 FAX. (305) 262-6978

MULLION\M95–06A

ALUMINUM TUBE MULLIONS

TRULITE WINDOW & DOOR SOLUTIONS, LLC
8130 N.W. 74TH AVE.
MEDLEY, FL. 33166
TEL. (305) 887–2646 FAX (305) 883–1309

revisions:

no	date	by	description
C	07.25.06	H	UPDATED FOR 2004 FBC
D	05.05.09		GENERAL REVISION
E	09.02.10		MANUF. NAME REVISED
F	11.18.11		UPDATED TO 2010 FBC, NAME REV

date: 11–20–95
scale: 1/2" = 1"
dr. by: HAMID
chk. by:

drawing no.
M95–06A

DESIGN LOAD CAPACITY – PSF (TUBE MULLIONS)						
WINDOW DIMS.		1 X 2 STD.	1 X 3 STD.	1 X 4 STD.	2 X 4 STD.	2 X 6 STD.
WIDTH (W)	MULL SPAN					
19-1/8"	38-3/8"	140.0	140.0	140.0	140.0	140.0
26-1/2"		136.2	140.0	140.0	140.0	140.0
30"		120.3	140.0	140.0	140.0	140.0
37"		97.6	140.0	140.0	140.0	140.0
42"		85.9	140.0	140.0	140.0	140.0
48"		75.2	140.0	140.0	140.0	140.0
53-1/8"		67.9	139.8	140.0	140.0	140.0
60"		60.2	123.8	140.0	140.0	140.0
66"		54.7	112.5	140.0	140.0	140.0
72"		50.1	103.2	140.0	140.0	140.0
74"		48.8	100.4	140.0	140.0	140.0
19-1/8"	50-5/8"	82.2	140.0	140.0	140.0	140.0
26-1/2"		59.3	140.0	140.0	140.0	140.0
30"		52.4	140.0	140.0	140.0	140.0
37"		42.5	115.3	140.0	140.0	140.0
42"		37.4	101.6	140.0	140.0	140.0
48"		32.8	88.9	140.0	140.0	140.0
53-1/8"		29.6	80.3	129.3	140.0	140.0
60"		26.2	71.1	114.5	140.0	140.0
66"		23.8	64.7	104.1	140.0	140.0
72"		21.8	59.3	95.4	139.3	140.0
74"		21.2	57.7	92.8	135.6	140.0
19-1/8"	63"	42.7	122.1	140.0	140.0	140.0
26-1/2"		30.8	88.1	140.0	140.0	140.0
30"		27.2	77.8	140.0	140.0	140.0
37"		22.0	63.1	119.6	140.0	140.0
42"		–	55.6	105.6	140.0	140.0
48"		–	48.6	92.4	135.0	140.0
53-1/8"		–	43.9	83.5	121.9	140.0
60"		–	38.9	73.9	108.0	140.0
66"		–	35.4	67.2	98.2	140.0
72"		–	32.4	61.6	90.0	140.0
74"		–	31.5	60.0	87.5	140.0
19-1/8"	74-1/4"	26.1	74.6	140.0	140.0	140.0
26-1/2"		–	53.8	115.4	140.0	140.0
30"		–	47.5	101.9	140.0	140.0
37"		–	38.5	82.6	120.7	140.0
42"		–	33.9	72.8	106.4	140.0
48"		–	29.7	63.7	93.1	140.0
53-1/8"		–	26.8	57.6	84.1	140.0
60"		–	23.8	51.0	74.4	140.0
66"		–	21.6	46.3	67.7	131.0
72"		–	–	42.5	62.0	120.1
74"		–	–	41.3	60.4	116.9

DESIGN LOAD CAPACITY – PSF (TUBE MULLIONS)						
WINDOW DIMS.		1 X 2 STD.	1 X 3 STD.	1 X 4 STD.	2 X 4 STD.	2 X 6 STD.
WIDTH (W)	MULL SPAN					
19-1/8"	84"	–	51.5	110.4	140.0	140.0
26-1/2"		–	37.2	79.7	116.4	140.0
30"		–	32.8	70.4	102.8	140.0
37"		–	26.6	57.1	83.4	140.0
42"		–	23.4	50.3	73.5	140.0
48"		–	20.5	44.0	64.3	140.0
53-1/8"		–	–	39.7	58.1	127.2
60"		–	–	35.2	51.4	112.6
66"		–	–	32.0	46.7	102.4
72"		–	–	29.3	42.8	93.8
74"		–	–	28.5	41.7	91.3
19-1/8"	96"	–	34.5	74.0	108.1	140.0
26-1/2"		–	24.9	53.4	78.0	140.0
30"		–	22.0	47.2	68.9	140.0
37"		–	–	38.2	55.9	139.8
42"		–	–	33.7	49.2	123.2
48"		–	–	29.5	43.1	107.8
53-1/8"		–	–	26.6	38.9	97.4
60"		–	–	23.6	34.4	86.2
66"		–	–	21.4	31.3	78.4
72"		–	–	–	28.7	71.8
74"		–	–	–	27.9	69.9
19-1/8"	108"	–	24.2	51.9	75.9	140.0
26-1/2"		–	–	37.5	54.8	140.0
30"		–	–	33.1	48.4	134.5
37"		–	–	26.9	39.2	109.1
42"		–	–	23.7	34.6	96.1
48"		–	–	20.7	30.2	84.1
53-1/8"		–	–	–	27.3	76.0
60"		–	–	–	24.2	67.3
66"		–	–	–	22.0	61.2
72"		–	–	–	20.2	56.1
74"		–	–	–	–	54.5
19-1/8"	120"	–	–	37.9	55.3	140.0
26-1/2"		–	–	27.3	39.9	111.0
30"		–	–	24.1	35.3	98.1
37"		–	–	–	28.6	79.5
42"		–	–	–	25.2	70.1
48"		–	–	–	22.0	61.3
53-1/8"		–	–	–	–	55.4
60"		–	–	–	–	49.0
66"		–	–	–	–	44.6
72"		–	–	–	–	40.9
74"		–	–	–	–	39.8

DESIGN LOAD CAPACITY – PSF (TUBE MULLIONS)						
WINDOW DIMS.		1 X 2 STD.	1 X 3 STD.	1 X 4 STD.	2 X 4 STD.	2 X 6 STD.
WIDTH (W)	MULL SPAN					
19-1/8"	132"	–	–	28.5	41.6	115.6
26-1/2"		–	–	20.5	30.0	83.4
30"		–	–	–	26.5	73.7
37"		–	–	–	21.5	59.8
42"		–	–	–	–	52.6
48"		–	–	–	–	46.1
53-1/8"		–	–	–	–	41.6
60"		–	–	–	–	36.8
66"		–	–	–	–	33.5
72"		–	–	–	–	30.7
74"		–	–	–	–	29.9
19-1/8"	144"	–	–	21.9	32.0	89.0
26-1/2"		–	–	–	23.1	64.3
30"		–	–	–	20.4	56.8
37"		–	–	–	–	46.0
42"		–	–	–	–	40.5
48"		–	–	–	–	35.5
53-1/8"		–	–	–	–	32.1
60"		–	–	–	–	28.4
66"		–	–	–	–	25.8
72"		–	–	–	–	23.7
74"		–	–	–	–	23.0

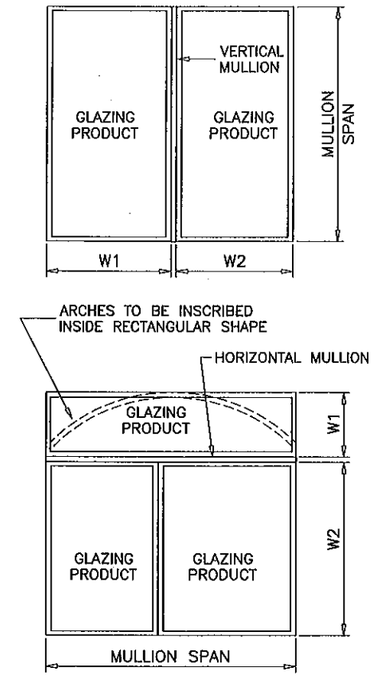

TYPICAL MULLION ARRANGEMENTS

$$\text{WIDTH (W)} = \frac{W1 + W2}{2}$$

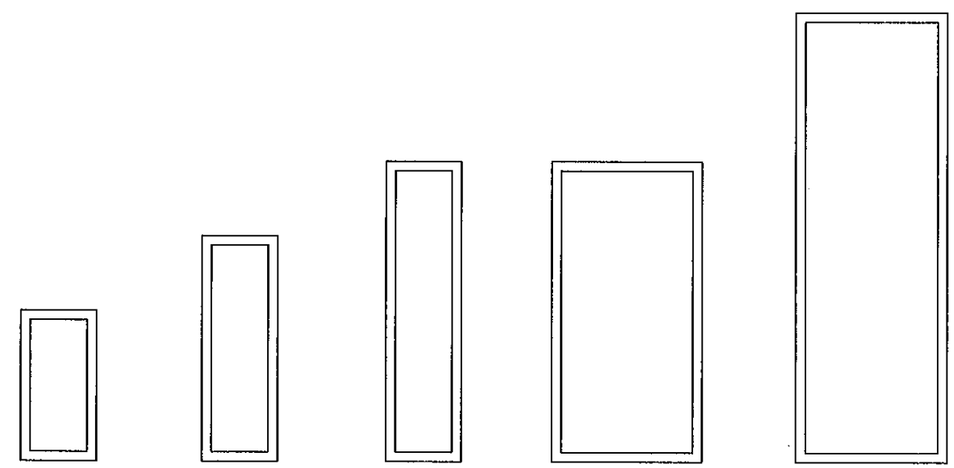

1 X 2 STD. TUBE		1 X 3 STD. TUBE		1 X 4 STD. TUBE		2 X 4 STD. TUBE		2 X 6 STD. TUBE	
Ix IN^4	Sx IN^3	Ix IN^4	Sx IN^3	Ix IN^4	Sx IN^3	Ix IN^4	Sx IN^3	Ix IN^4	Sx IN^3
.332	.332	.950	.633	2.037	1.019	2.976	1.488	8.276	2.758

NOTE:
MULLIONS RATED IN THESE CHARTS MAY BE ORIENTED VERTICALLY OR HORIZONTALLY.
(INTERPOLATION BETWEEN WIDTHS ALLOWED)

MULLIONS

Engr: JAVAD AHMAD
CIVIL
FLA. PE # 70592
C.A.N. 3538

NOV 22 2011

PRODUCT REVISED
as complying with the Florida Building Code
Acceptance No 11-1213.07
Expiration Date DEC. 24, 2016
By Manuel Perez
Miami Dade Product Control

AL-FAROOQ CORPORATION
ENGINEERS & PRODUCT DEVELOPMENT
1235 S.W. 87 AVE
MIAMI, FLORIDA 33174
TEL. (305) 264-8100 FAX. (305) 262-6978

MULLION\M95-06A

ALUMINUM TUBE MULLIONS

TRULITE WINDOW & DOOR SOLUTIONS, LLC
8130 N.W. 74TH AVE.
MEDLEY, FL. 33166
TEL. (305) 887-2646 FAX (305) 883-1309

revisions:

no	date	by	description
			UPDATED FOR 2004 FBC
			GENERAL REVISION
			MANUF. NAME REVISED
			UPDATED TO 2010 FBC, NAME REV

date: 11-20-95
scale: –
dr. by: HAMID
chk. by:

drawing no.
M95-06A

DESIGN LOAD CAPACITY – PSF									
WINDOW DIMS.		ANCHORS TYPE							
WIDTH (W)	MULL SPAN	A2	A4	AA2	AA4	AAA2	AAA4	B2	B4
19–1/8"	38–3/8"	140.0	140.0	140.0	140.0	140.0	140.0	140.0	140.0
26–1/2"		109.9	140.0	124.6	140.0	140.0	140.0	140.0	140.0
30"		97.1	140.0	110.1	140.0	127.6	140.0	140.0	140.0
37"		78.7	140.0	89.2	140.0	103.4	140.0	140.0	140.0
42"		69.3	138.7	78.6	140.0	91.1	140.0	140.0	140.0
48"		60.7	121.3	68.8	137.6	79.7	140.0	140.0	140.0
53–1/8"		54.8	109.6	62.2	124.3	72.0	140.0	135.3	140.0
60"		48.5	97.1	55.0	110.1	63.8	127.6	119.8	140.0
66"		44.1	88.2	50.0	100.1	58.0	116.0	108.9	140.0
72"		40.4	80.9	45.9	91.7	53.2	106.3	99.9	140.0
74"		39.3	78.7	44.6	89.2	51.7	103.4	97.2	140.0
19–1/8"	50–5/8"	115.4	140.0	130.9	140.0	140.0	140.0	140.0	140.0
26–1/2"		83.3	140.0	94.5	140.0	109.5	140.0	140.0	140.0
30"		73.6	140.0	83.4	140.0	96.7	140.0	140.0	140.0
37"		59.7	119.3	67.7	135.3	78.4	140.0	140.0	140.0
42"		52.6	105.1	59.6	119.2	69.1	138.2	129.8	140.0
48"		46.0	92.0	52.1	104.3	60.4	120.9	113.5	140.0
53–1/8"		41.5	83.1	47.1	94.2	54.6	109.2	102.6	140.0
60"		36.8	73.6	41.7	83.4	48.4	96.7	90.8	140.0
66"		33.4	66.9	37.9	75.9	44.0	87.9	82.6	140.0
72"		30.7	61.3	34.8	69.5	40.3	80.6	75.7	140.0
74"		29.8	59.7	33.8	67.7	39.2	78.4	73.6	140.0
19–1/8"	63"	92.7	140.0	105.2	140.0	121.9	140.0	140.0	140.0
26–1/2"		66.9	133.9	75.9	140.0	88.0	140.0	140.0	140.0
30"		59.1	118.2	67.0	134.1	77.7	140.0	140.0	140.0
37"		47.9	95.9	54.4	108.7	63.0	126.0	118.4	140.0
42"		42.2	84.5	47.9	95.8	55.5	111.0	104.3	140.0
48"		37.0	73.9	41.9	83.8	48.6	97.1	91.2	140.0
53–1/8"		33.4	66.8	37.9	75.7	43.9	87.8	82.4	140.0
60"		29.6	59.1	33.5	67.0	38.9	77.7	73.0	140.0
66"		26.9	53.7	30.5	61.0	35.3	70.6	66.4	132.7
72"		24.6	49.3	27.9	55.9	32.4	64.8	60.8	121.7
74"		24.0	47.9	27.2	54.4	31.5	63.0	59.2	118.4
19–1/8"	74–1/4"	78.7	140.0	89.2	140.0	103.4	140.0	140.0	140.0
26–1/2"		56.8	113.6	64.4	128.8	74.6	140.0	140.0	140.0
30"		50.2	100.3	56.9	113.8	65.9	131.9	123.9	140.0
37"		40.7	81.3	46.1	92.3	53.5	106.9	100.4	140.0
42"		35.8	71.7	40.6	81.3	47.1	94.2	88.5	140.0
48"		31.4	62.7	35.6	71.1	41.2	82.4	77.4	140.0
53–1/8"		28.3	56.7	32.1	64.3	37.2	74.5	69.9	139.9
60"		25.1	50.2	28.4	56.9	33.0	65.9	61.9	123.9
66"		22.8	45.6	25.9	51.7	30.0	59.9	56.3	112.6
72"		20.9	41.8	23.7	47.4	27.5	54.9	51.6	103.2
74"		20.3	40.7	23.1	46.1	26.7	53.5	50.2	100.4

DESIGN LOAD CAPACITY – PSF									
WINDOW DIMS.		ANCHORS TYPE							
WIDTH (W)	MULL. SPAN	A2	A4	AA2	AA4	AAA2	AAA4	B2	B4
19–1/8"	84"	69.6	139.1	78.9	140.0	91.4	140.0	140.0	140.0
26–1/2"		50.2	100.4	56.9	113.9	66.0	132.0	123.9	140.0
30"		44.3	88.7	50.3	100.6	58.3	116.6	109.5	140.0
37"		36.0	71.9	40.8	81.5	47.3	94.5	88.8	140.0
42"		31.7	63.3	35.9	71.8	41.6	83..3	78.2	140.0
48"		27.7	55.4	31.4	62.9	36.4	72.9	68.4	136.9
53–1/8"		25.0	50.1	28.4	56.8	32.9	65.8	61.8	123.7
60"		22.2	44.3	25.1	50.3	29.1	58.3	54.7	109.5
66"		20.2	40.3	22.9	45.7	26.5	53.0	49.8	99.5
72"		–	37.0	21.0	41.9	24.3	48.6	45.6	91.2
74"		–	36.0	20.4	40.8	23.6	47.3	44.4	88.8
19–1/8"	96"	60.9	121.7	69.0	138.0	80.0	140.0	140.0	140.0
26–1/2"		43.9	87.8	49.8	99.6	57.7	115.5	108.5	140.0
30"		38.8	77.6	44.0	88.0	51.0	102.0	95.8	140.0
37"		31.5	62.9	35.7	71.4	41.4	82.7	77.7	140.0
42"		27.7	55.4	31.4	62.9	36.4	72.9	68.4	136.9
48"		24.3	48.5	27.5	55.0	31.9	63.8	59.9	119.8
53–1/8"		21.9	43.8	24.8	49.7	28.8	57.6	54.1	108.2
60"		–	38.8	22.0	44.0	25.5	51.0	47.9	95.8
66"		–	35.3	20.0	40.0	23.2	46.4	43.5	87.1
72"		–	32.3	–	36.7	21.3	42.5	39.9	79.8
74"		–	31.5	–	35.7	20.7	41.4	38.8	77.7
19–1/8"	108"	54.1	108.2	61.4	122.7	71.1	140.0	133.6	140.0
26–1/2"		39.0	78.1	44.3	88.6	51.3	102.6	96.4	140.0
30"		34.5	69.0	39.1	78.2	45.3	90.7	85.2	140.0
37"		28.0	55.9	31.7	63.4	36.8	73.5	69.0	138.1
42"		24.6	49.3	27.9	55.9	32.4	64.8	60.8	121.7
48"		21.6	43.1	24.4	48.9	28.3	56.7	53.2	106.4
53–1/8"		–	39.0	22.1	44.2	25.6	51.2	48.1	96.2
60"		–	34.5	–	39.1	22.7	45.3	42.6	85.2
66"		–	31.4	–	35.6	20.6	41.2	38.7	77.4
72"		–	28.7	–	32.6	–	37.8	35.5	71.0
74"		–	28.0	–	31.7	–	36.8	34.5	69.0
19–1/8"	120"	48.7	97.4	55.2	110.4	64.0	128.0	120.2	140.0
26–1/2"		35.1	70.3	39.8	79.7	46.2	92.4	86.8	140.0
30"		31.0	62.1	35.2	70.4	40.8	81.6	76.6	140.0
37"		25.2	50.3	28.5	57.1	33.1	66.2	62.1	124.3
42"		22.2	44.3	25.1	50.3	29.1	58.3	54.7	109.5
48"		–	38.8	22.0	44.0	25.5	51.0	47.9	95.8
53–1/8"		–	35.1	–	39.8	23.0	46.1	43.3	86.6
60"		–	31.0	–	35.2	20.4	40.8	38.3	76.6
66"		–	28.2	–	32.0	–	37.1	34.8	69.7
72"		–	25.9	–	29.3	–	34.0	31.9	63.9
74"		–	25.2	–	28.5	–	33.1	31.1	62.1

DESIGN LOAD CAPACITY – PSF									
WINDOW DIMS.		ANCHORS TYPE							
WIDTH (W)	MULL SPAN	A2	A4	AA2	AA4	AAA2	AAA4	B2	B4
19–1/8"	132"	44.3	88.5	50.2	100.4	58.2	116.4	109.3	140.0
26–1/2"		31.9	63.9	36.2	72.5	42.0	84.0	78.9	140.0
30"		28.2	56.4	32.0	64.0	37.1	74.2	69.7	139.3
37"		22.9	45.8	25.9	51.9	30.1	60.1	56.5	113.0
42"		20.2	40.3	22.9	45.7	26.5	53.0	49.8	99.5
48"		–	35.3	20.0	40.0	23.2	46.4	43.5	87.1
53–1/8"		–	31.9	–	36.1	20.9	41.9	39.3	78.7
60"		–	28.2	–	32.0	–	37.1	34.8	69.7
66"		–	25.7	–	29.1	–	33.7	31.7	63.3
72"		–	23.5	–	26.7	–	30.9	29.0	58.1
74"		–	22.9	–	25.9	–	30.1	28.2	56.5
19–1/8"	144"	40.6	81.2	46.0	92.0	53.3	106.7	100.2	140.0
26–1/2"		29.3	58.6	33.2	66.4	38.5	77.0	72.3	140.0
30"		25.9	51.7	29.3	58.7	34.0	68.0	63.9	127.7
37"		21.0	41.9	23.8	47.6	27.6	55.1	51.8	103.6
42"		–	37.0	21.0	41.9	24.3	48.6	45.6	91.2
48"		–	32.3	–	36.7	21.3	42.5	39.9	79.8
53–1/8"		–	29.2	–	33.1	–	38.4	36.1	72.1
60"		–	25.9	–	29.3	–	34.0	31.9	63.9
66"		–	23.5	–	26.7	–	30.9	29.0	58.1
72"		–	21.6	–	24.4	–	28.3	26.6	53.2
74"		–	21.0	–	23.8	–	27.6	25.9	51.8

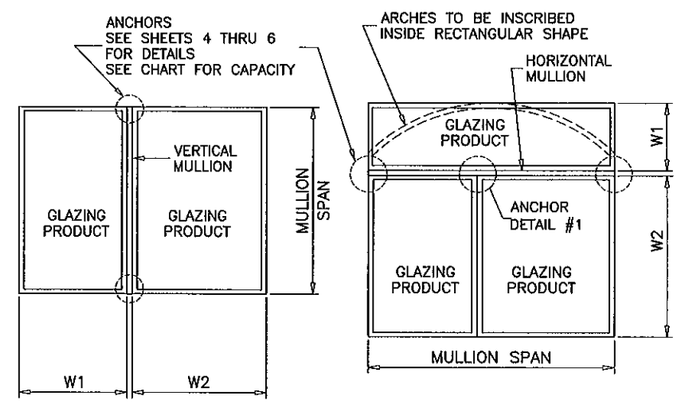

TYPICAL MULLION ARRANGEMENTS

$$\text{WIDTH (W)} = \frac{W1 + W2}{2}$$

NOTE:
ANY ANCHOR CONDITION SHOWN HEREIN MAY COVER LOCATIONS AT HEAD, SILL OR JAMB ENDS.

FOR ANCHORS DESCRIPTION SEE SHEETS 4 THRU 6.
(INTERPOLATION BETWEEN WIDTHS OR SPANS ALLOWED)

ANCHORS

Engr: JAVAD AHMAD
CIVIL
FLA. PE # 70592
C.A.N. 3538
NOV 22 2011

PRODUCT REVISED
as complying with the Florida
Building Code
Acceptance No 11-1213.07
Expiration Date DEC. 24, 2016
By Manuel Perez
Miami-Dade Product Control

AL-FAROOQ CORPORATION
ENGINEERS & PRODUCT DEVELOPMENT
1235 S.W. 87 AVE
MIAMI, FLORIDA 33174
TEL. (305) 264-8100 FAX. (305) 262-6978

MULLION\M95-06A

ALUMINUM TUBE MULLIONS

TRULITE WINDOW & DOOR SOLUTIONS, LLC
8130 N.W. 74TH AVE.
MEDLEY, FL. 33166
TEL. (305) 887-2646 FAX (305) 883-1309

revisions:

no	date	by	description
C	07.25.06	H	UPDATED FOR 2004 FBC
D	05.05.09		GENERAL REVISION
E	09.02.10		MANUF. NAME REVISED
F	11.18.11		UPDATED TO 2010 FBC, NAME REV

date: 11–20–95
scale: –
dr. by: HAMID
chk. by:

drawing no.
M95–06A

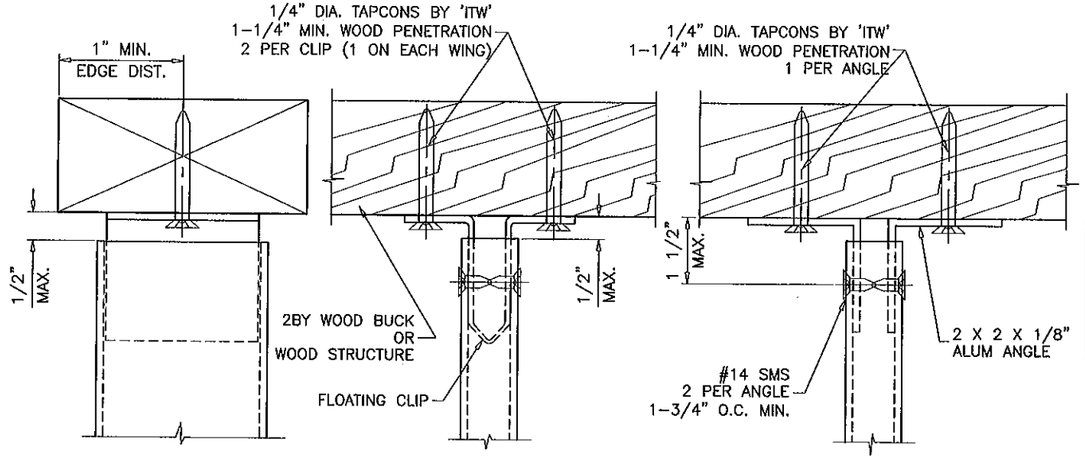

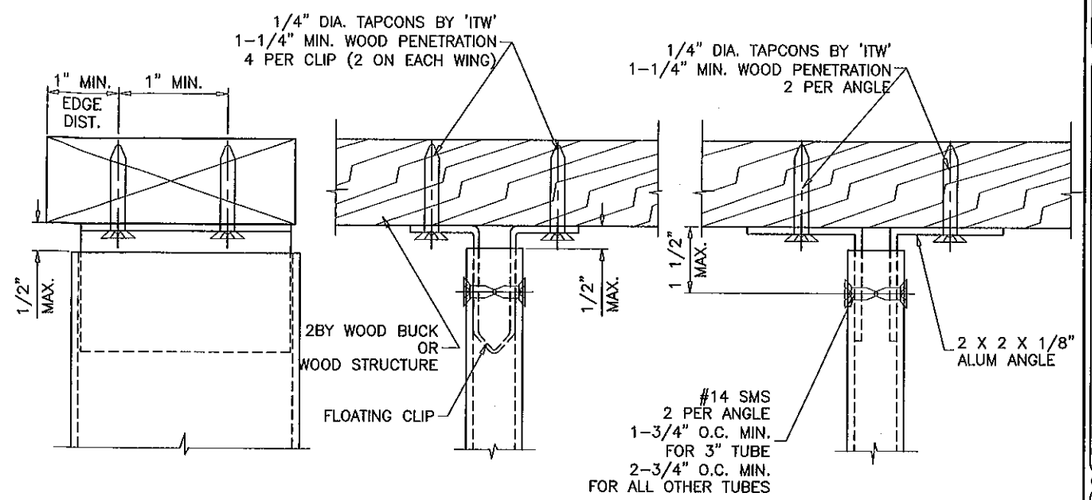

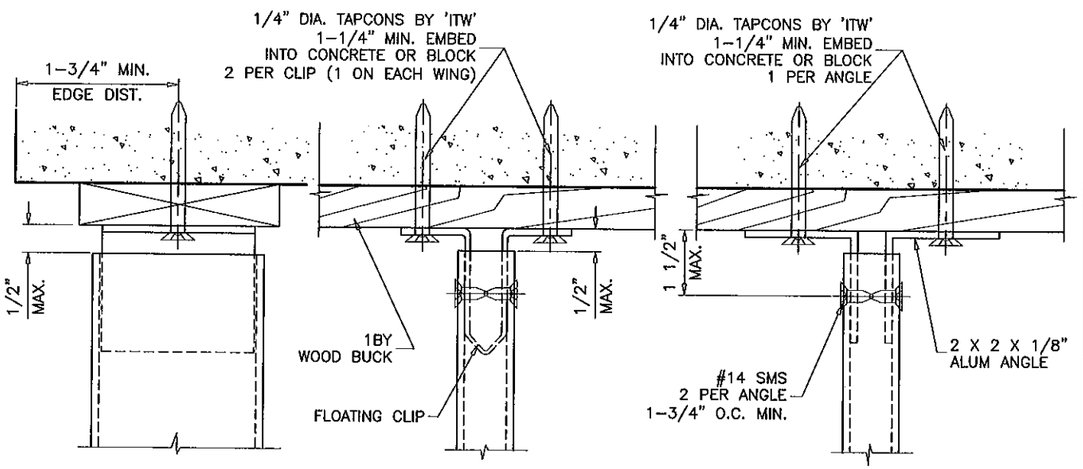

ANCHORS TYPE 'A2'

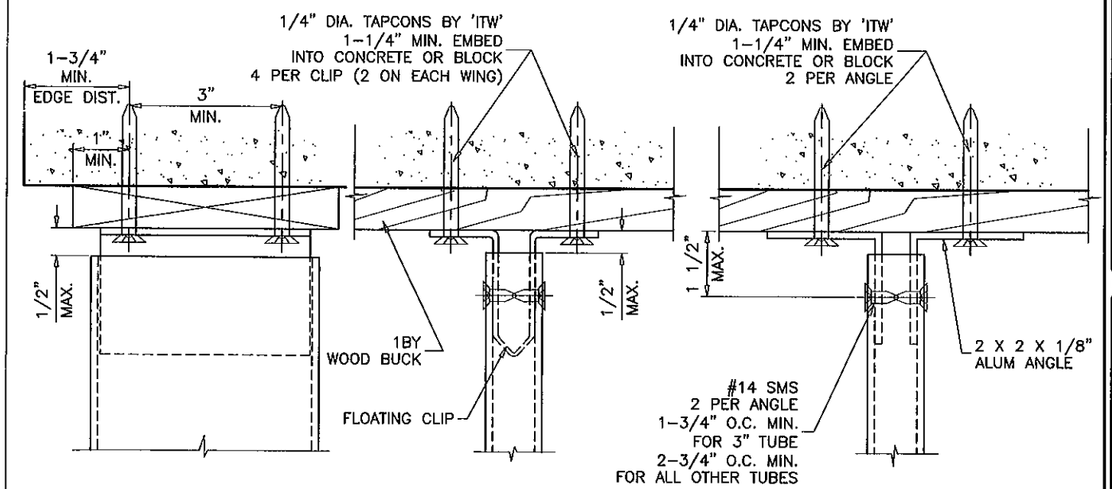

ANCHORS TYPE 'A4'

ALL CLIPS TO FIT SNUG INTO TUBE MULLIONS.
TAPCONS MAY BE HEX OR FLAT HEAD.

Engr: JAVAD AHMAD
CIVIL
FLA. PE # 70592
C.A.N. 3538
NOV 22 2011

PRODUCT REVISED
as complying with the Florida
Building Code
Acceptance No 11-1213.07
Expiration Date DEC. 24 2016
By Manuel Perez
Miami Dade Product Control

AL-FAROOQ CORPORATION
ENGINEERS & PRODUCT DEVELOPMENT
1235 S.W. 87 AVE
MIAMI, FLORIDA 33174
TEL. (305) 264-8100 FAX. (305) 262-6978

MULLION\M95-06A

ALUMINUM TUBE MULLIONS

TRULITE WINDOW & DOOR SOLUTIONS, LLC
8130 N.W. 74TH AVE.
MEDLEY, FL. 33166
TEL. (305) 887-2646 FAX (305) 883-1309

revisions:

no	date	by	description
C	07.25.06	H	UPDATED FOR 2004 FBC
D	05.05.09		GENERAL REVISION
E	09.02.10		MANUF. NAME REVISED
F	11.18.11		UPDATED TO 2010 FBC, NAME REV

date: 11-20-95
scale: 3/8" = 1"
dr. by: HAMID
chk. by:

drawing no.
M95-06A

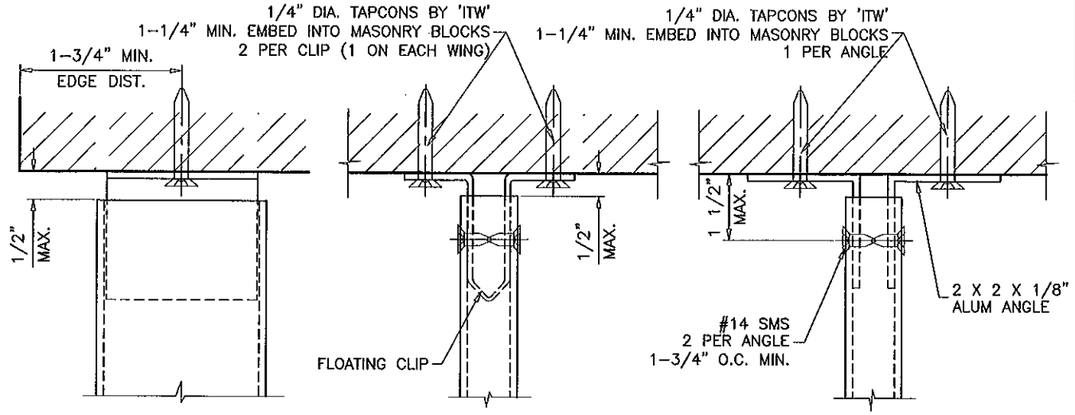

ANCHORS TYPE 'AA2'

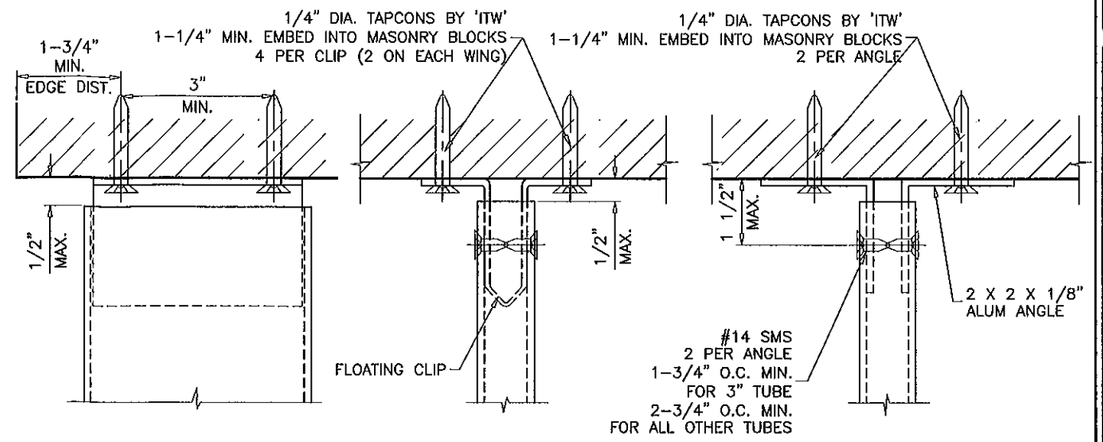

ANCHORS TYPE 'AA4'

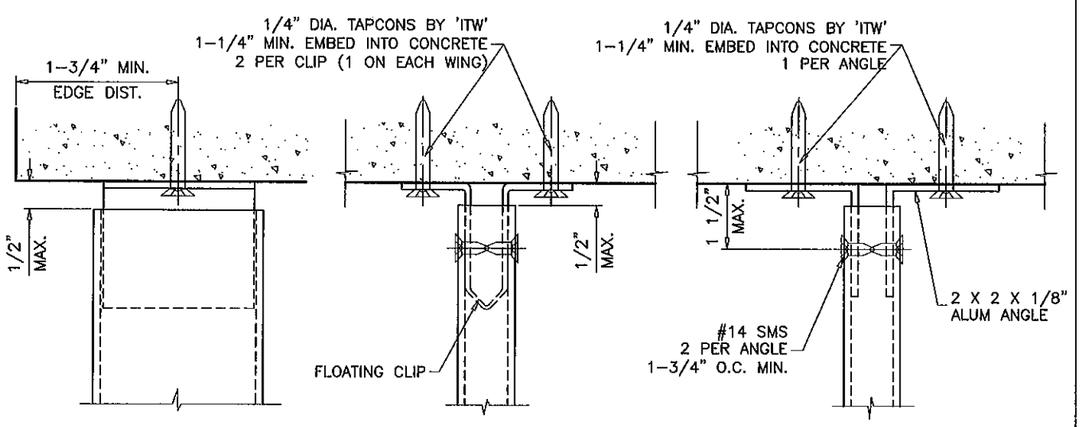

ANCHORS TYPE 'AAA2'

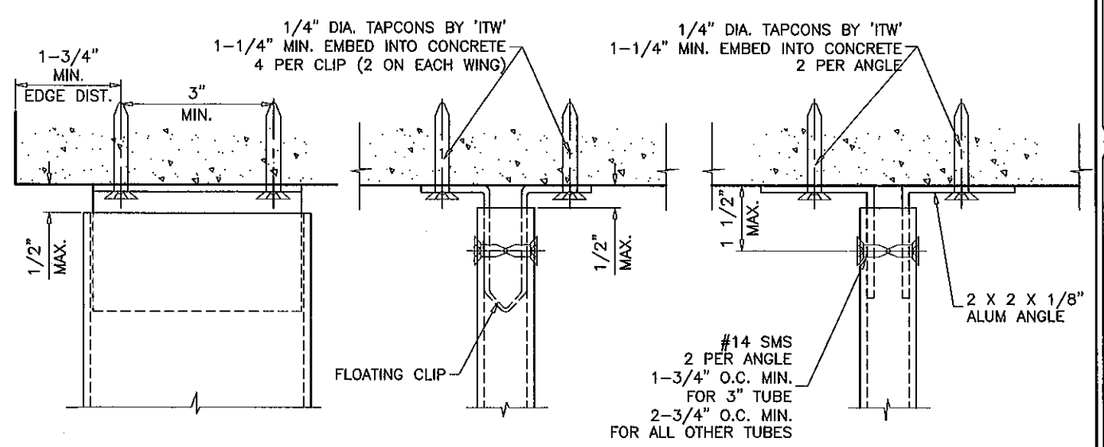

ANCHORS TYPE 'AAA4'

ALL CLIPS TO FIT SNUG INTO TUBE MULLIONS.
TAPCONS MAY BE HEX OR FLAT HEAD.

Engr: JAVAD AHMAD
CIVIL
FLA. PE # 70592
C.A.N. 3538

NOV 22 2011

PRODUCT REVISED
as complying with the Florida
Building Code
Acceptance No 11-1213.07
Expiration Date DEC. 24, 2016
By Manuel Sera
Miami Dade Product Control

AL-FAROOQ CORPORATION
ENGINEERS & PRODUCT DEVELOPMENT
1235 S.W. 87 AVE
MIAMI, FLORIDA 33174
TEL. (305) 264-8100 FAX. (305) 262-6978

MULLION M95-06A

ALUMINUM TUBE MULLIONS

TRULITE WINDOW & DOOR SOLUTIONS, LLC
8130 N.W. 74TH AVE.
MEDLEY, FL. 33166
TEL. (305) 887-2646 FAX (305) 883-1309

revisions:

no	date	by	description
C	07.25.06	H	UPDATED FOR 2004 FBC
D	05.05.09		GENERAL REVISION
E	09.02.10		MANUF. NAME REVISED
F	11.18.11		UPDATED TO 2010 FBC, NAME REV

date: 11-20-95
scale: 3/8" = 1"
dr. by: HAMID
chk. by:

drawing no.
M95-06A

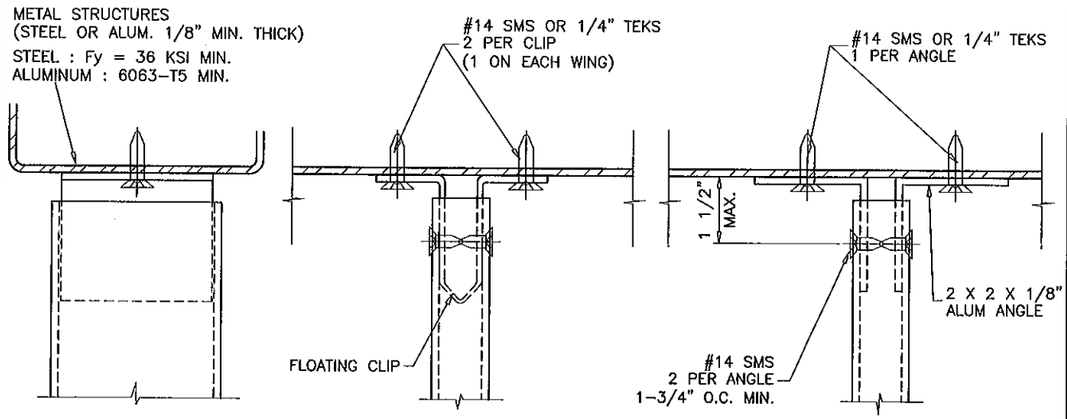

ANCHORS TYPE 'B2'

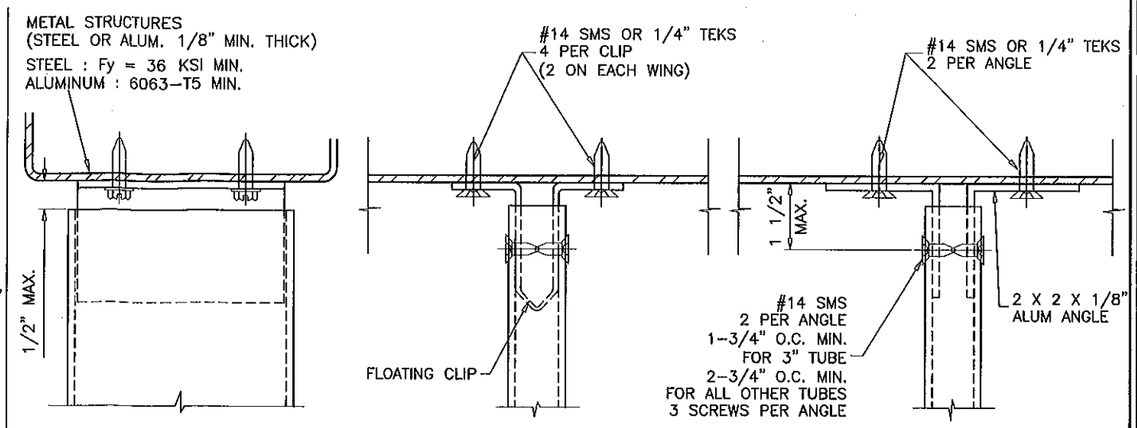

ANCHORS TYPE 'B4'

ALL CLIPS TO FIT SNUG INTO TUBE MULLIONS.
TAPCONS MAY BE HEX OR FLAT HEAD.

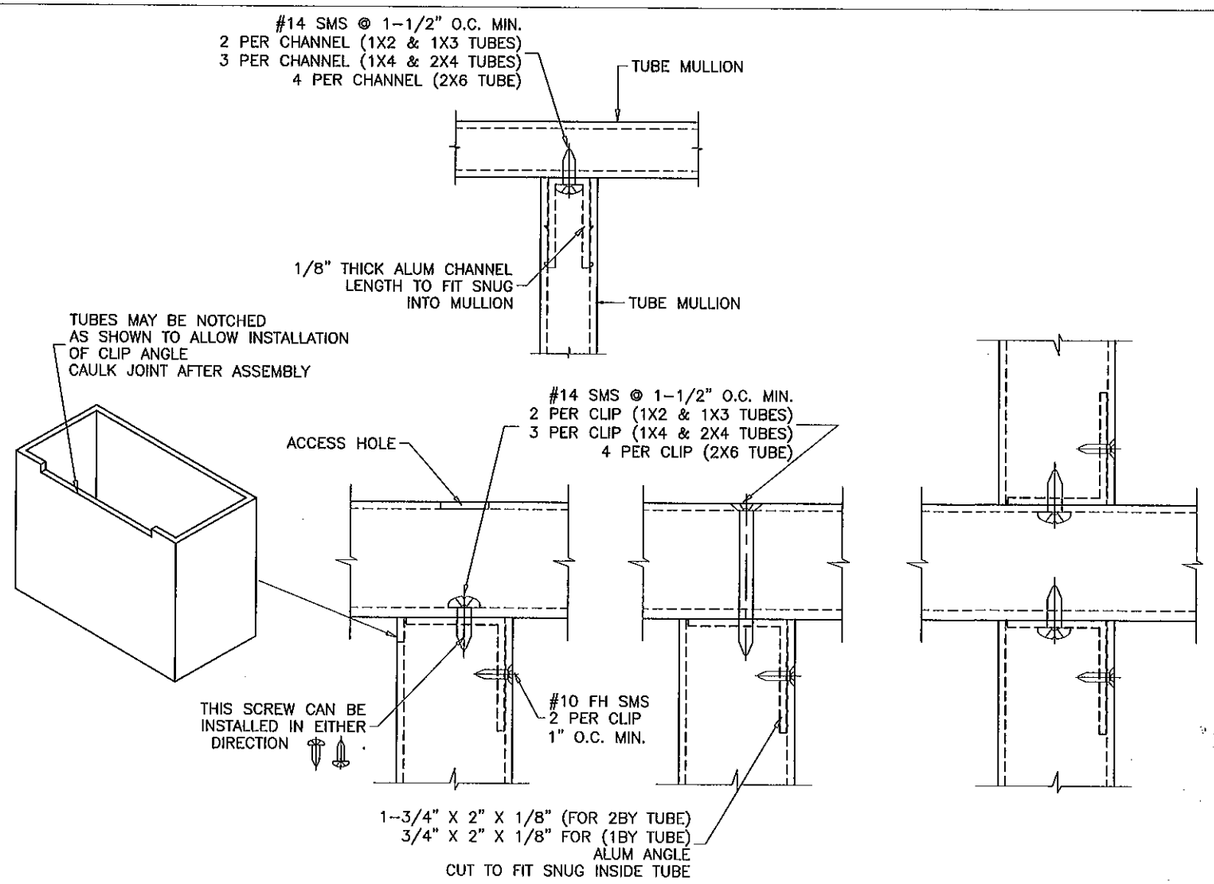

ANCHOR DETAIL #1

METAL TO METAL CONNECTION

Engr: JAVAD AHMAD
CIVIL
FLA. PE # 70592
C.A.N. 3538

NOV 22 2011

PRODUCT REVISED
as complying with the Florida
Building Code
Acceptance No 11-1213.07
Expiration Date DEC. 24, 2016
By Manuel Perez
Miami Dade Product Control

AL-FAROOQ CORPORATION
ENGINEERS & PRODUCT DEVELOPMENT
1235 S.W. 87 AVE
MIAMI, FLORIDA 33174
TEL. (305) 264-8100 FAX. (305) 262-6978

MULLION\M95-06A

ALUMINUM TUBE MULLIONS

TRULITE WINDOW & DOOR SOLUTIONS, LLC
8130 N.W. 74TH AVE.
MEDLEY, FL. 33166
TEL. (305) 887-2646 FAX (305) 883-1309

revisions:

no	date	by	description
C	07.25.06	H	UPDATED FOR 2004 FBC
D	05.05.09		GENERAL REVISION
E	09.02.10		MANUF. NAME REVISED
F	11.18.11		UPDATED TO 2010 FBC, NAME REV

date: 11-20-95
scale: 3/8" = 1"
dr. by: HAMID
chk. by:

drawing no.
M95-06A

sheet 6 of 6