MIAMI-DADE COUNTY
DEPARTMENT OF PERMITTING, ENVIRONMENT, AND REGULATORY AFFAIRS (PERA)
BOARD AND CODE ADMINISTRATION DIVISION

MIAMI-DADE COUNTY
PRODUCT CONTROL SECTION
11805 SW 26 Street, Room 208
Miami, Florida 33175-2474
T (786) 315-2590 F (786) 315-2599
www.miamidade.gov/pera/

NOTICE OF ACCEPTANCE (NOA)

W & W Glass, LLC
302 Airport Executive Park
Nanuet, NY 10954

SCOPE:

This NOA is being issued under the applicable rules and regulations governing the use of construction materials. The documentation submitted has been reviewed and accepted by Miami-Dade County PERA - Product Control Section to be used in Miami Dade County and other areas where allowed by the Authority Having Jurisdiction (AHJ).

This NOA shall not be valid after the expiration date stated below. The Miami-Dade County Product Control Section (In Miami Dade County) and/or the AHJ (in areas other than Miami Dade County) reserve the right to have this product or material tested for quality assurance purposes. If this product or material fails to perform in the accepted manner, the manufacturer will incur the expense of such testing and the AHJ may immediately revoke, modify, or suspend the use of such product or material within their jurisdiction. PERA reserves the right to revoke this acceptance, if it is determined by Miami-Dade County Product Control Section that this product or material fails to meet the requirements of the applicable building code.

This product is approved as described herein, and has been designed to comply with the Florida Building Code, including the High Velocity Hurricane Zone.

DESCRIPTION: Series "Pilkington Planar" Point Supported Aluminum Curtain Wall System – L.M.I.

APPROVAL DOCUMENT: Drawing No. **HT 2008**, titled "Large Missile Point Supported Glass System", sheets 1 through 12 of 12, dated 03/16/09 with revision #6 dated 12/05/11, prepared by Larson Engineering, Inc., signed and sealed by Ethan A. Charpentier, P.E., bearing the Miami-Dade County Product Control Revision stamp with the Notice of Acceptance number and expiration date by the Miami-Dade County Product Control Section.

MISSILE IMPACT RATING: Large and Small Missile Impact Resistant

LABELING: Each unit shall bear a permanent label with the manufacturer's name or logo, city, state, model/series, and following statement: "Miami-Dade County Product Control Approved", unless otherwise noted herein.

RENEWAL of this NOA shall be considered after a renewal application has been filed and there has been no change in the applicable building code negatively affecting the performance of this product.

TERMINATION of this NOA will occur after the expiration date or if there has been a revision or change in the materials, use, and/or manufacture of the product or process. Misuse of this NOA as an endorsement of any product, for sales, advertising or any other purposes shall automatically terminate this NOA. Failure to comply with any section of this NOA shall be cause for termination and removal of NOA.

ADVERTISEMENT: The NOA number preceded by the words Miami-Dade County, Florida, and followed by the expiration date may be displayed in advertising literature. If any portion of the NOA is displayed, then it shall be done in its entirety.

INSPECTION: A copy of this entire NOA shall be provided to the user by the manufacturer or its distributors and shall be available for inspection at the job site at the request of the Building Official.

This NOA **revises NOA # 09-0604.12** and consists of this page 1 and evidence pages E-1 and E-2, as well as approval document mentioned above.

The submitted documentation was reviewed by **Manuel Perez, P.E.**

MIAMI-DADE COUNTY APPROVED

NOA No. 11-1213.11
Expiration Date: March 10, 2016
Approval Date: March 01, 2012

NOTICE OF ACCEPTANCE: EVIDENCE SUBMITTED

A. DRAWINGS

1. Manufacturer's die drawings and sections.
2. Drawing No **HT 2008**, Sheets 1 through 12 of 12, titled "Large Missile Point Supported Glass System", dated 03/16/09 with revision #6 dated 12/05/11, prepared by Larson Engineering, Inc., signed and sealed by Ethan A. Charpentier, P.E.

B. TESTS

1. Test reports on: 1) Air Infiltration Test, per FBC, TAS 202-94
   2) Uniform Static Air Pressure Test, Loading per FBC TAS 202-94
   3) Water Resistance Test, per FBC, TAS 202-94
   4) Large Missile Impact Test per FBC, TAS 201-94
   5) Cyclic Wind Pressure Loading per FBC, TAS 203-94

   along with marked-up drawings and installation diagram of a Pilkington Planar Architectural Glass Wall System comprised of nine individual fixed glass lites attached to the provided steel support structure specimen #C10, prepared by Hurricane Test laboratory, LLC, Test Report No. **HTL-0219-0609-10**, dated 09/14/10, signed and sealed by Vinu J. Abraham, P.E.
   (Submitted under previous NOA# 09-0604.12)
2. Test reports on: 1) Air Infiltration Test, per FBC, TAS 202-94
   2) Uniform Static Air Pressure Test, Loading per FBC TAS 202-94
   3) Water Resistance Test, per FBC, TAS 202-94
   4) Large Missile Impact Test per FBC, TAS 201-94
   5) Cyclic Wind Pressure Loading per FBC, TAS 203-94

   along with marked-up drawings and installation diagram of a Pilkington Planar Architectural Glass Wall System comprised of nine individual fixed glass lites attached to the provided steel support structure specimens #1 and #2, and single lite specimens #3 and #4, prepared by Hurricane Test laboratory, LLC, Test Report No. **HTL-0219-0116-08**, dated 02/25/08, signed and sealed by Vinu J. Abraham, P.E.
   (Submitted under previous NOA# 09-0604.12)

C. CALCULATIONS

1. Anchor verification calculations and structural analysis, complying with FBC-2007 and FBC-2010, prepared by Larson Engineering, Inc., dated 3/16/09 and updated on 12/08/11, signed and sealed by Ethan A. Charpentier, P.E.
2. Glazing complies with ASTM E1300-04

D. QUALITY ASSURANCE

1. Miami-Dade Department of Permitting, Environment, and Regulatory Affairs (PERA).

Manuel Perez, P.E.
Product Control Examiner
Expiration Date: March 10, 2016
Approval Date: March 01, 2012
NOA No. 11-1213.11

NOTICE OF ACCEPTANCE: EVIDENCE SUBMITTED

E. MATERIAL CERTIFICATIONS

1. Notice of Acceptance No. **11–0624.02** issued to **E.I. DuPont DeNemours & Co.**, Inc. for their "**DuPont SentryGlas® Interlayer**" dated 08/25/11, expiring on 01/14/17.
2. Dow Corning Corp. Construction Industry System Laboratory Report – Sealant Adhesion, dated 01/05/05 certifying testing/evaluation of Dow Corning 995 silicone sealant and application recommendations for this specific job, prepared by Erin Zimmer, Dow Corning Construction Field Specialist.

F. STATEMENTS

1. Statement letter of conformance, complying with the FBC-2007 and FBC-2010, dated December 8, 2011, signed and sealed by Ethan a. Charpentier, P.E.
2. Statement letter of no financial interest, dated May 7, 2009, signed and sealed by Ethan a. Charpentier, P.E.
3. Laboratory compliance letter for Test Report No. **HTL-0219-1106-08**, issued by Hurricane Test Laboratory, Inc., dated March 13, 2009, signed and sealed by Vinu J. Abraham, P.E.
   (Submitted under previous NOA# 09-0604.12)
4. Distributor Agreement document in conformance to BCN guidelines dated 06/29/09, signed by David Stuart Pinder and Howard S. Haber.
   (Submitted under previous NOA# 09-0604.12)

G. OTHERS

1. Notice of Acceptance No. **09-0604.12**, issued to W & W Glass, LLC for their Series "Pilkington Planar" Point Supported Aluminum Curtain Wall System – L.M.I., approved on 03/10/11 and expiring on 03/10/16.

Manuel Perez, P.E.
Product Control Examiner
Expiration Date: March 10, 2016
Approval Date: March 01, 2012
NOA No. 11-1213.11

PILKINGTON PLANAR

LARGE MISSILE POINT SUPPORTED GLASS SYSTEM

DESIGN PARAMETERS

6 2010 FLORIDA BUILDING CODE (HVHZ REQUIREMENTS)
TAS 202 & ASTM E283 – AIR INFILTRATION
TAS 202 & ASTM E331 – WATER INFILTRATION
TAS 202 & ASTM E330 – UNIFORM STATIC LOAD
TAS 201 & ASTM E1886/E1996 LEVEL D – LARGE MISSILE IMPACT
TAS 203 & ASTM E1886/E1996 – CYCLIC LOAD

PERFORMANCE CLASS
+/- 100 PSF

SYSTEM DIMENSIONS
CONFIGURATION C – SEE SHEET 02, 03 and 12 5
CONFIGURATION D – SEE SHEET 06

GLASS TYPE
CONFIGURATION C – SEE SHEET 02, 03 and 12 5
CONFIGURATION D – SEE SHEET 06

HARDWARE
PILKINGTON HARDWARE IS TYPE 316 STAINLESS STEEL

ALUMINUM ALLOY
6063–T5 $\frac{1}{4}$" EXTRUDED ALUMINUM GLAZING CHANNELS, CLEAR ANODIZED FINISH

SEALANT
DOW CORNING 995
OPEN CELL, NON–GASSING BACKER ROPE

SUPPORTING STEEL STRUCTURE DESIGN AND ANCHORS SHALL BE CAPABLE OF RESISTING LOADS IMPOSED BY CURTAIN WALL UNDER MAXIMUM DESIGN LOADS, BE APPROVED BY STRUCTURAL ENGINEER OF RECORDS (EOR) AND PASS THE STRUCTURAL INSPECTION.

INDEX OF DRAWINGS

	01	COVER
	02	Configuration C1 – Insulated glass units 5'–0" x 5'–0" module
	03	Configuration C2 – Insulated glass units 5'–0" x 10'–0" module
	04	Configuration C – Details
	05	Configuration C – Rod & Body Assemblies
	06	Configuration C – Concrete & Steel Anchoring
	07	Configuration D – Laminated glass 5'–0" x 10'–0" module
	08	Configuration D – Details
	09	Configuration D – Rod & Body Assemblies
	10	Configuration D – Concrete & Steel Anchoring
	11	Configuration C & D Gusset Layout
1	12	Configuration C3 Alternate Configuration Option

ETHAN A. CHARPENTIER
LICENSE
No. 65106
STATE OF FLORIDA
PROFESSIONAL ENGINEER

DEC 0 8 2011

Rev.	Details	Date
6	Update drawing to reference 2010 FBC	12–05–11
5	Add drawing numbers as requested	02–22–11
4	CHANGE PAGE TOTAL ADD NEW SHEET	02–09–11
3	Revise note	01–12–11
2	Add drawings 10 & 11	01–07–11
1	ADDED NOTE	05–14–10

DADE CO. STAMP

PRODUCT REVISED
as complying with the Florida Building Code
Acceptance No 11-1213.11
Expiration Date March 10, 2016
By Manuel Perez
Miami-Dade Product Control

ENGINEER STAMP

Florida Firm No. F–02000005175
Certificate of Authorization #9803
Ethan A. Charpentier
Registration No. 65106

Larson Engineering, Inc.
3524 Labore Road
White Bear Lake, MN 55110
(P) 651.481.9120 (F) 651.481.9201

Project
LARGE MISSILE POINT SUPPORTED GLASS SYSTEM

Scale N/A [ANSI D]

Drawn by GM
Date 03–16–09

Drawing No. HT 2008
Sheet No. 01 of 12 4

PILKINGTON PLANAR
BY W&W
W&W GLASS LLC
302 AIRPORT EXEC. PARK
NANUET, NEW YORK, 10954–5285
1–800–452–7925
(845) 425–4000 (NYS)
FAX: (845) 425–6156

Configuration C1 - Insulated glass units with column support 5

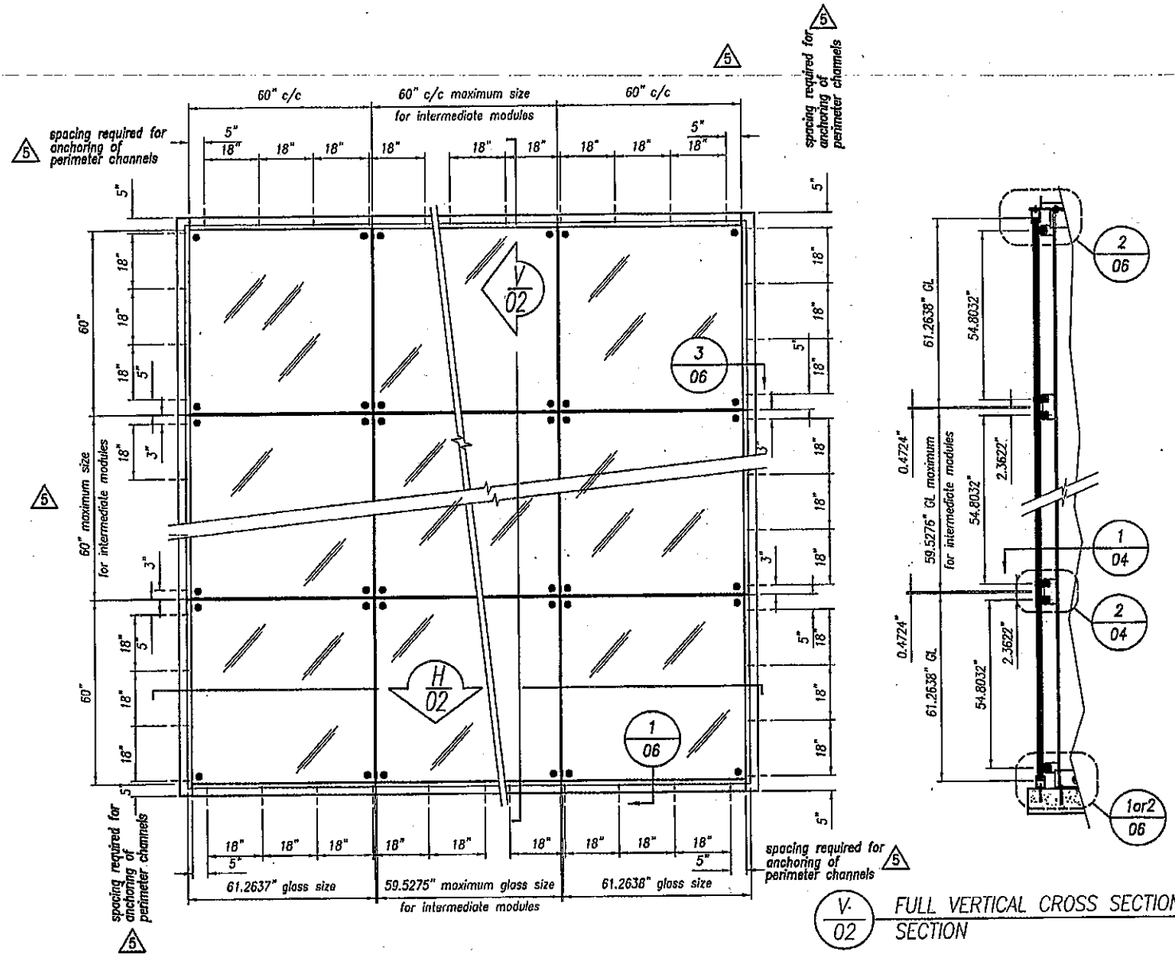

V/02 FULL VERTICAL CROSS SECTION SECTION

Support column is to be determined by the Engineer of record. The support is to have a minimum wall thickness of ½". 5

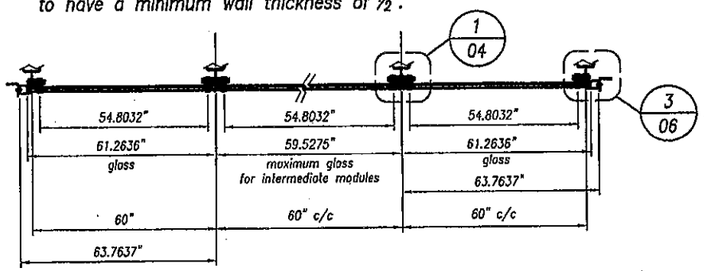

H/02 FULL HORIZONTAL CROSS SECTION PLAN

GLASS TYPE

1 3/4" (44.28mm) Double Glazed Laminated unit comprised of:
- 3/8" (10mm) Clear (Tempered) 5
- 5/8" (16mm) Airspace
- 5/16" (8mm) Clear (Tempered) 5
- 0.090" (2.28mm) SGP Interlayer
- 5/16" (8mm) Clear (Tempered) 5

SYSTEM APPLICATION GUIDELINES:

- **MAXIMUM DIMENSIONS OF 4-POINT SUPPORTED GLASS:** 4
  WIDTH = 60"
  HEIGHT = 60"
- WALL COLUMN STIFFNESS TO BE DETERMINED BASED ON COLUMN LENGTH TO BE APPROVED BY THE STRUCTURAL ENGINEER OF RECORDS
- SELECT CHANNEL ANCHORAGE TO BE APPROVED BY THE STRUCTURAL ENGINEER OF RECORDS

GENERAL NOTES:

- DC995 SILICONE VERTICAL & HORIZONTAL JOINTS ARE TESTED TO 100 PSF
- WALL COLUMN ANCHORAGE IS NOT PART OF THIS SUBMISSION, BUT MUST BE APPROVED BY ENGINEER OF RECORDS AND PASS STRUCTURAL INSPECTION
- ASTM E1300 DOES NOT APPLY
- ALL TEMPERED GLASS SUPPLIED IN THE PILKINGTON PLANAR STYSTEM 5 SHALL BE HEAT SOAK TESTED AFTER TEMPERING. THIS SHALL BE INDICATED ON THE TEMPORARY SUPPLEMENTAL LABEL AS REQUIRED

Rev.	Details	Date
6	No Change	12-05-11
5	CHANGE TEXT SIZE EDIT NOTES REMOVE DIMENSIONS	02-22-11
4	ADD BOLD TEXT CHANGE PAGE TOTAL	02-09-11
3	No changes	01-12-11
2	Revise page number	01-07-11
1	ADDED FULL VERTICAL & HORIZONTAL CROSS SECTIONS, ADDED DETAIL CALLOUTS, ENGINEER PERIMETER ANCHOR LOCATIONS/SPACING, ADDED DIAGONAL LINES, ADDED NOTES	05-14-10

ETHAN A. CHARPENTIER LICENSE No. 65106 STATE OF FLORIDA PROFESSIONAL ENGINEER

DEC 0 8 2011

DADE CO. STAMP

PRODUCT REVISED as complying with the Florida Building Code
Acceptance No 11-1213.11
Expiration Date MARCH 10, 2016
By Miami Dade Product Control

ENGINEER STAMP

Florida Firm No. F-02000005175
Certificate of Authorization #9803
Ethan A. Charpentier
Registration No. 65106

Larson Engineering, Inc.
3524 Labore Road
White Bear Lake, MN 55110
(P) 651.481.9120 (F) 651.481.9201

Project: LARGE MISSILE POINT SUPPORTED GLASS SYSTEM

Scale 1:24 [ANSI B] 5

Drawn by GM

Date 03-16-09

Drawing No. HT 2008

Sheet No. 02 of 12 4

PILKINGTON PLANAR BY W&W
W&W GLASS LLC
302 AIRPORT EXEC. PARK
NANUET, NEW YORK, 10954-5285
1-800-452-7925
(845) 425-4000 (NYS)
FAX: (845) 425-6156

Configuration C2 - Insulated glass units with column support

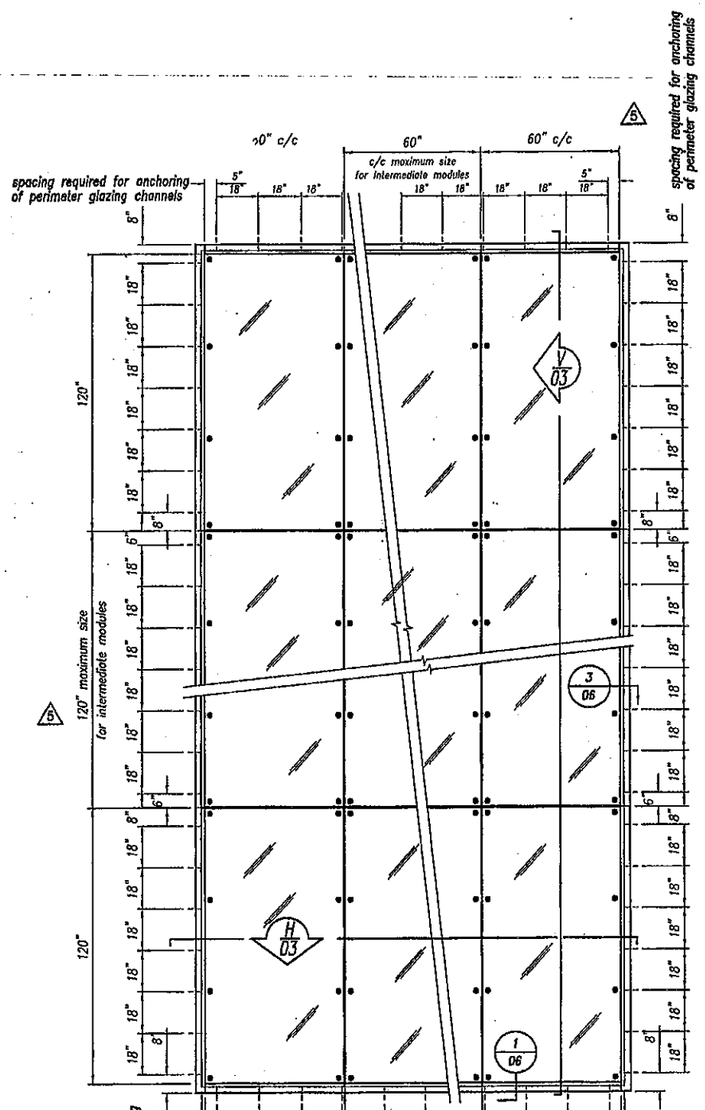

H 03 FULL HORIZONTAL CROSS SECTION PLAN

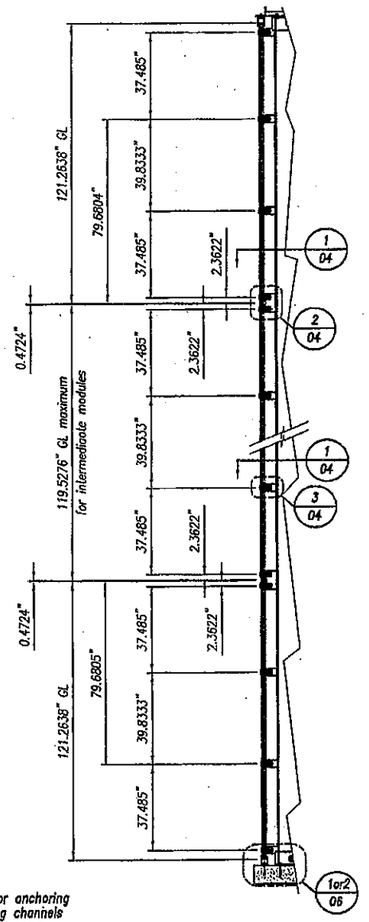

V 03 FULL VERTICAL CROSS SECTION SECTION

Support column is to be determined by the Engineer of record. The support is to have a minimum wall thickness of ½".

GLASS TYPE

1 3/4" (44.28mm) Double Glazed Laminated unit comprised of:
- 3/8" (10mm) Clear (Tempered) 5
- 5/8" (16mm) Airspace
- 5/16" (8mm) Clear (Tempered) 5
- 0.090" (2.28mm) SGP Interlayer
- 5/16" (8mm) Clear (Tempered) 5

SYSTEM APPLICATION GUIDELINES:

- **MAXIMUM DIMENSIONS OF 8-POINT SUPPORTED GLASS:**
  WIDTH = 60" HEIGHT = 120" OR **WIDTH = 120" HEIGHT = 60"** 4
- WALL COLUMN STIFFNESS TO BE DETERMINED BASED ON COLUMN LENGTH TO BE APPROVED BY THE STRUCTURAL ENGINEER OF RECORDS
- SELECT CHANNEL ANCHORAGE TO BE APPROVED BY THE STRUCTURAL ENGINEER OF RECORDS

GENERAL NOTES:

- DC995 SILICONE VERTICAL & HORIZONTAL JOINTS ARE TESTED TO 100 PSF
- WALL COLUMN ANCHORAGE IS NOT PART OF THIS SUBMISSION, BUT MUST BE APPROVED BY ENGINEER OF RECORDS AND PASS STRUCTURAL INSPECTION
- ASTM E1300 DOES NOT APPLY
- ALL TEMPERED GLASS SUPPLIED IN THE PILKINGTON PLANAR STYSTEM SHALL BE HEAT SOAK TESTED AFTER TEMPERING. THIS SHALL BE INDICATED ON THE TEMPORARY SUPPLEMENTAL LABEL AS REQUIRED 5

Rev.	Details	Date
6	No Change	12-05-11
5	EDIT NOTES REMOVE DIMENSIONS	02-22-11
4	ADD BOLD TEXT CHANGE PAGE TOTAL	02-09-11
3	No changes	01-12-11
2	Revise page number	01-07-11
1	[illegible]	05-14-10

Larson Engineering, Inc.
3524 Labore Road
White Bear Lake, MN 55110
(P) 651.481.9120 (F) 651.481.9201

ETHAN A. CHARPENTIER LICENSE No. 65106 STATE OF FLORIDA PROFESSIONAL ENGINEER
DEC 01 2011

PRODUCT REVISED
as complying with the Florida Building Code
Acceptance No 11-1213.11
Expiration Date March 10, 2016
By Miami Dade Product Control

Florida Firm No. F-02000005175
Certificate of Authorization #9803
Ethan A. Charpentier
Registration Nº

Project: LARGE MISSILE POINT SUPPORTED GLASS SYSTEM
Scale: 1:32 [ANSI D]
Drawn by: GM
Date: 03-16-09
Drawing No. HT 2008
Sheet No. 03 of 12 4

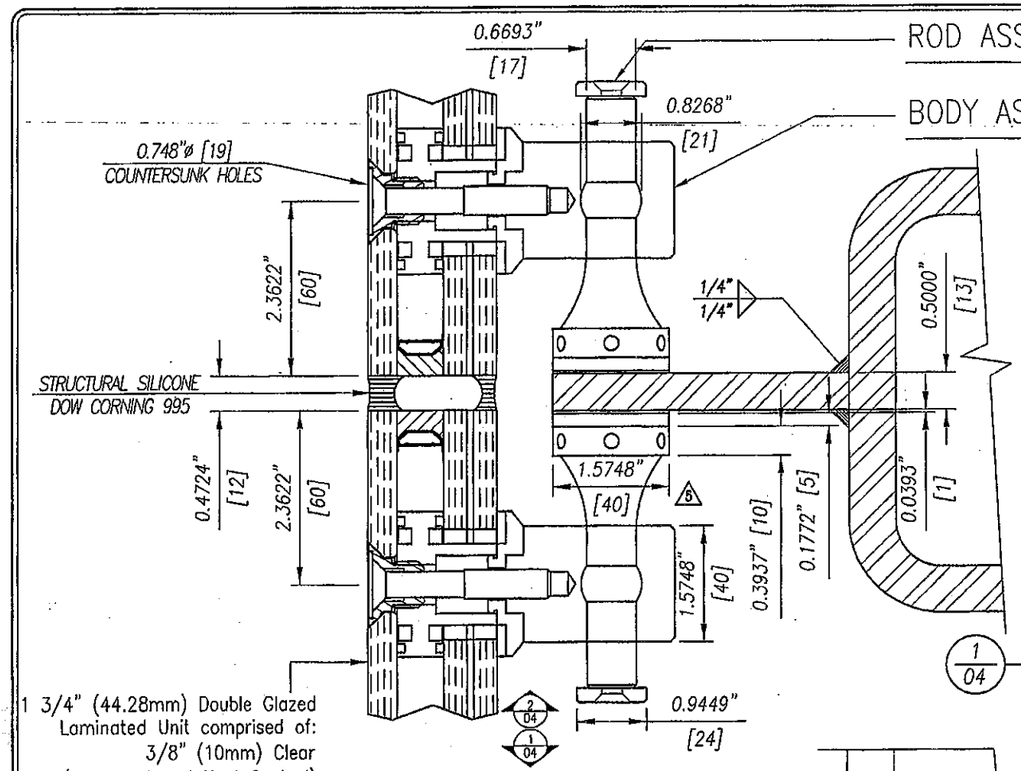

Support column is to be determined by the Engineer of record. The support is to have a minimum wall thickness of ½". 5

Configuration C1	Configuration C2
MAXIMUM WIND LOAD REACTION PER FITTING @ 100 psf = 625lbs	MAXIMUM WIND LOAD REACTION PER FITTING @ 100 psf = 917 lbs
MAXIMUM DEAD LOAD REACTION PER FITTING = 180 lbs	MAXIMUM DEAD LOAD REACTION PER FITTING = 360 lbs

1/04 PILKINGTON 905 FITTINGS DETAIL – PLAN

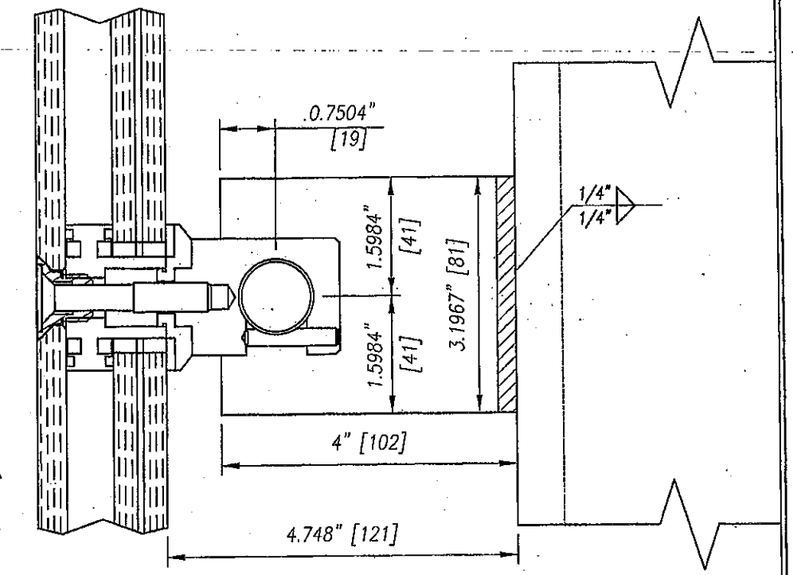

3/04 PILKINGTON 905 FITTINGS DETAIL – SECTION

1 3/4" (44.28mm) Double Glazed Laminated Unit comprised of:
3/8" (10mm) Clear (Tempered and Heat Soaked)
5/8" (16mm) Airspace
5/16" (8mm) Clear (Tempered and Heat Soaked)
3/32" (2.28mm) SGP Interlayer
5/16" (8mm) Clear (Tempered and Heat Soaked)

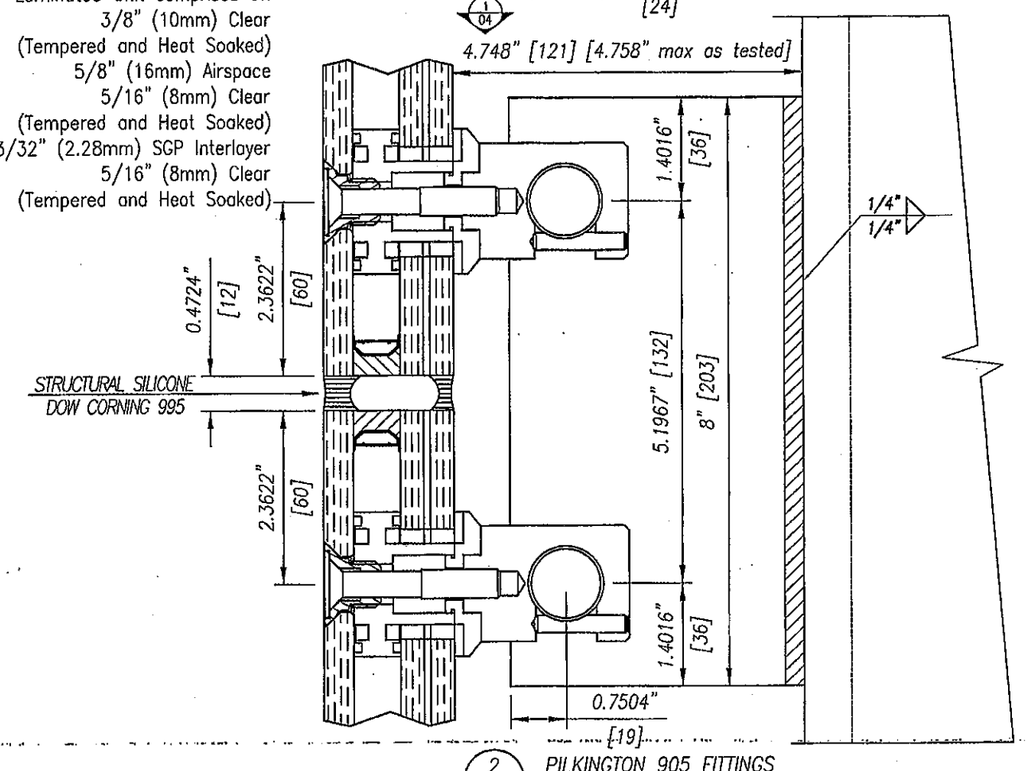

Support column is to be determined by the Engineer of record. The support column is to have a minimum wall thickness of ½". 5

Configuration C1	Configuration C2
MAXIMUM WIND LOAD REACTION PER FITTING @ 100 psf = 625lbs	MAXIMUM WIND LOAD REACTION PER FITTING @ 100 psf = 917 lbs
MAXIMUM DEAD LOAD REACTION PER FITTING = 180 lbs	MAXIMUM DEAD LOAD REACTION PER FITTING = 360 lbs

5

2/04 PILKINGTON 905 FITTINGS DETAIL – SECTION

ETHAN A. CHARPENTIER
LICENSE
No. 65106
STATE OF FLORIDA
PROFESSIONAL ENGINEER
DEC 0 8 2011

Rev.	Details	Date
6	No Change	12-05-11
5	CHANGE TEXT SIZE	02-22-11
4	CHANGE PAGE TOTAL	02-09-11
3	No changes	01-12-11
2	Revise page number	01-07-11
1	NO CHANGES	05-14-10

DADE CO. STAMP
PRODUCT REVISED
as complying with the Florida Building Code
Acceptance No 11-1213.11
Expiration Date March 10, 2016
By Manuel Perez
Miami Dade Product Control

ENGINEER STAMP
Florida Firm No. F-02000005175
Certificate of Authorization #9803
Ethan A. Charpentier
Registration No. 65106

Larson Engineering, Inc.
3524 Labore Road
White Bear Lake, MN 55110
(P) 651.481.9120 (F) 651.481.9201

Project
LARGE MISSILE POINT SUPPORTED GLASS SYSTEM

Scale 1:2 [ANSI D]

Drawn by GM
Date 03-16-09

Drawing No. HT 2008
Sheet No. 04 of 12 4

PILKINGTON PLANAR BY W&W

W&W GLASS LLC
302 AIRPORT EXEC. PARK
NANUET, NEW YORK, 10954-5285
1-800-452-7925
(845) 425-4000 (NYS)
FAX: (845) 425-6156

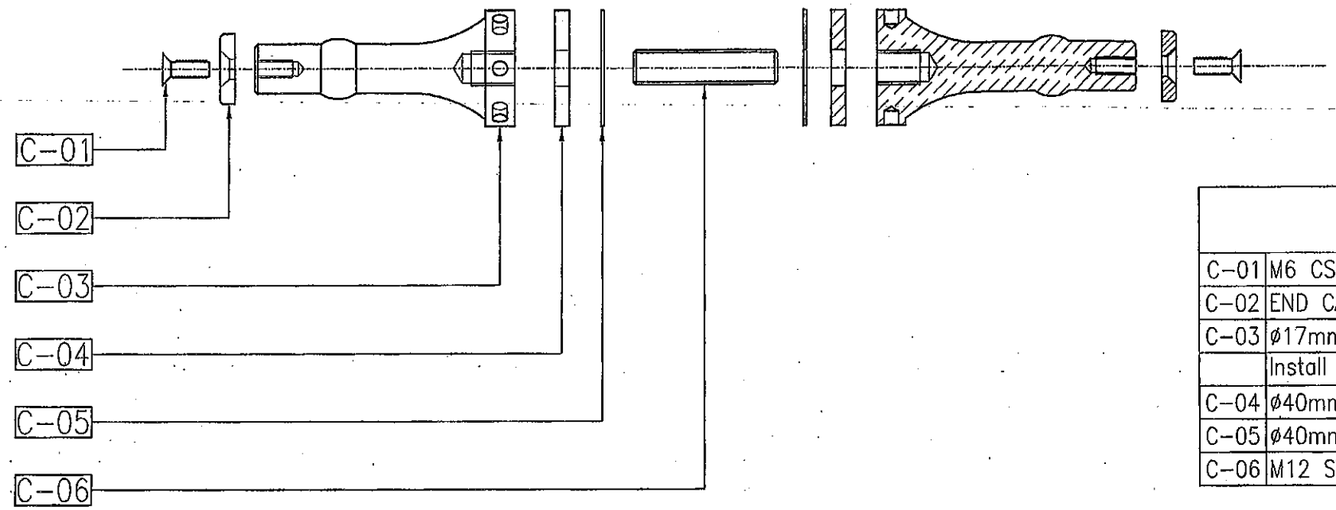

1/05 PILKINGTON ROD ASSEMBLY C DETAIL

ROD ASSEMBLY C	
C-01	M6 CSK. SOCKET HEAD SCREW
C-02	END CAP
C-03	ø17mm 905 SEISMIC ROD with ø21mm BALL
	Install the seismic rod nut using a torque of 37 ft. lbs
C-04	ø40mm x 5mm THICK WASHER
C-05	ø40mm GASKET
C-06	M12 STUD

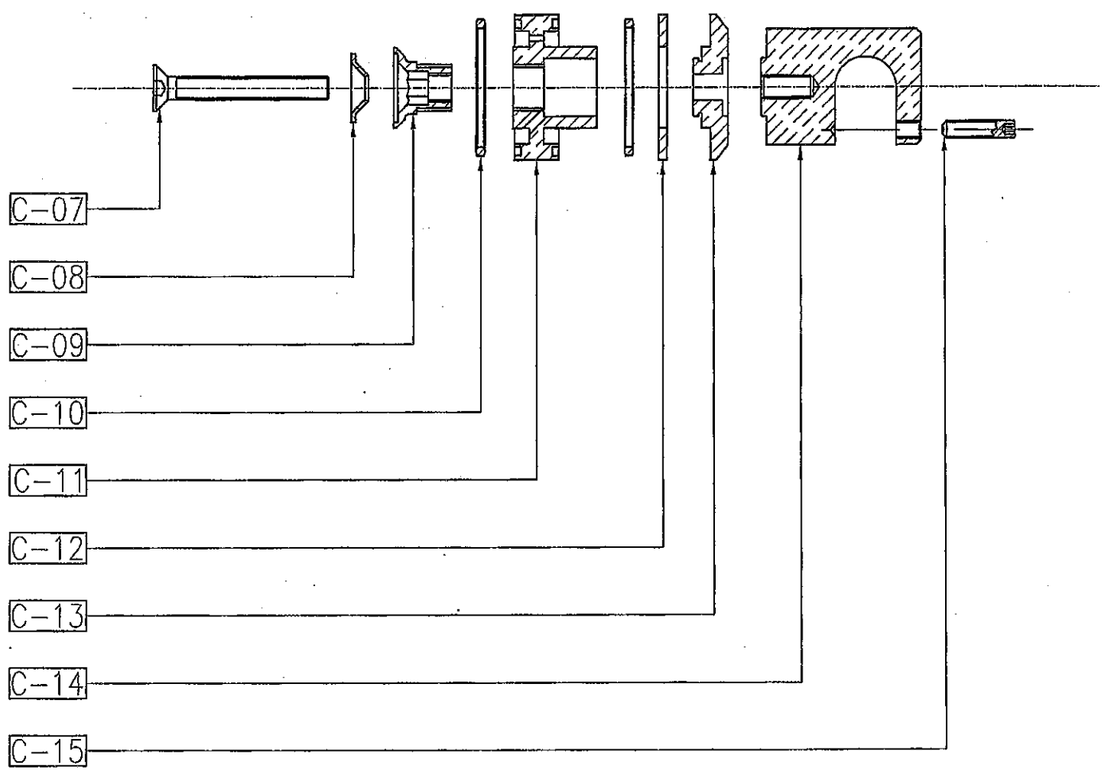

2/05 PILKINGTON BODY ASSEMBLY C DETAIL

BODY ASSEMBLY C	
C-07	M10 SCREW (installation torque to be 15 ft. lbs.)
C-08	WASHER CUP
C-09	BUSH
C-10	O RING
C-11	BOSS
C-12	WASHER CUSHION
C-13	ø50mm FLANGE
C-14	ø40mm 905 BODY
C-15	SOCKET SET SCREW

ETHAN A. CHARPENTIER
LICENSE
No. 65106
STATE OF FLORIDA
PROFESSIONAL ENGINEER

DEC 0 8 2011

Rev.	Details	Date
6	No Change	12-05-11
5	NO CHANGES	02-22-11
4	CHANGE PAGE TOTAL	02-09-11
3	Revise descriptions	01-12-11
2	Revise page number	01-07-11
1	NO CHANGES	05-14-10

DADE CO. STAMP

PRODUCT REVISED
as complying with the Florida
Building Code
Acceptance No 11-1213.11
Expiration Date MARCH 10, 2016
By Manuel Perez
Miami-Dade Product Control

ENGINEER STAMP

Florida Firm No. F-02000005175
Certificate of Authorization #9803
Ethan A. Charpentier
Registration No. 65106

Larson Engineering, Inc.
3524 Labore Road
White Bear Lake, MN 55110
(P) 651.481.9120 (F) 651.481.9201

Project: LARGE MISSILE POINT SUPPORTED GLASS SYSTEM

Scale: 1:2 [ANSI D]

Drawn by: GM

Date: 03-16-09

Drawing No. HT 2008

Sheet No. 05 of 12 4

PILKINGTON PLANAR BY W&W

W&W GLASS LLC
302 AIRPORT EXEC. PARK
NANUET, NEW YORK, 10954-5285
1-800-452-7925
(845) 425-4000 (NYS)
FAX: (845) 425-6156

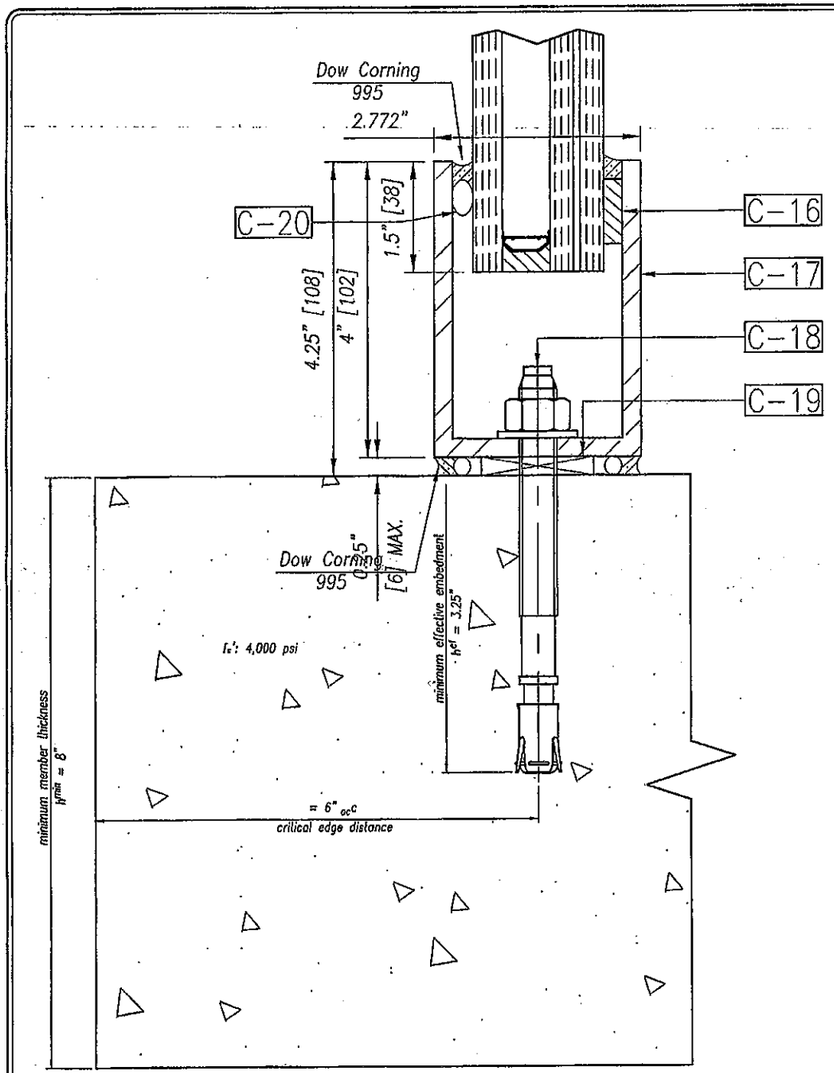

1/06 ANCHORING TO CONCRETE AT JAMB, SILL OR HEAD DETAIL

MAXIMUM SHEAR REACTION PER ANCHOR/BOLT @ 100 psf & 18" c/c SPACING = 375 lbs 5

MAXIMUM TENSION REACTION PER ANCHOR/BOLT @ 100 psf & 18" c/c SPACING = 2,000 lbs 5

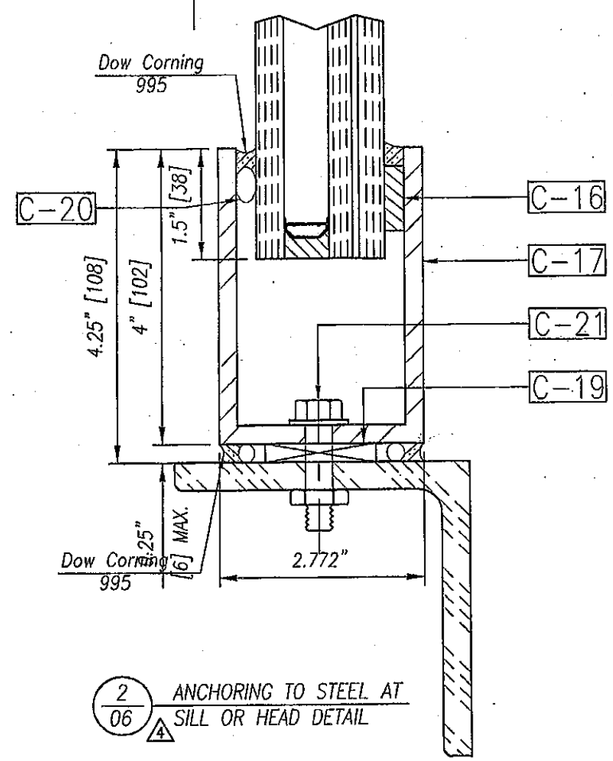

2/06 4 ANCHORING TO STEEL AT SILL OR HEAD DETAIL

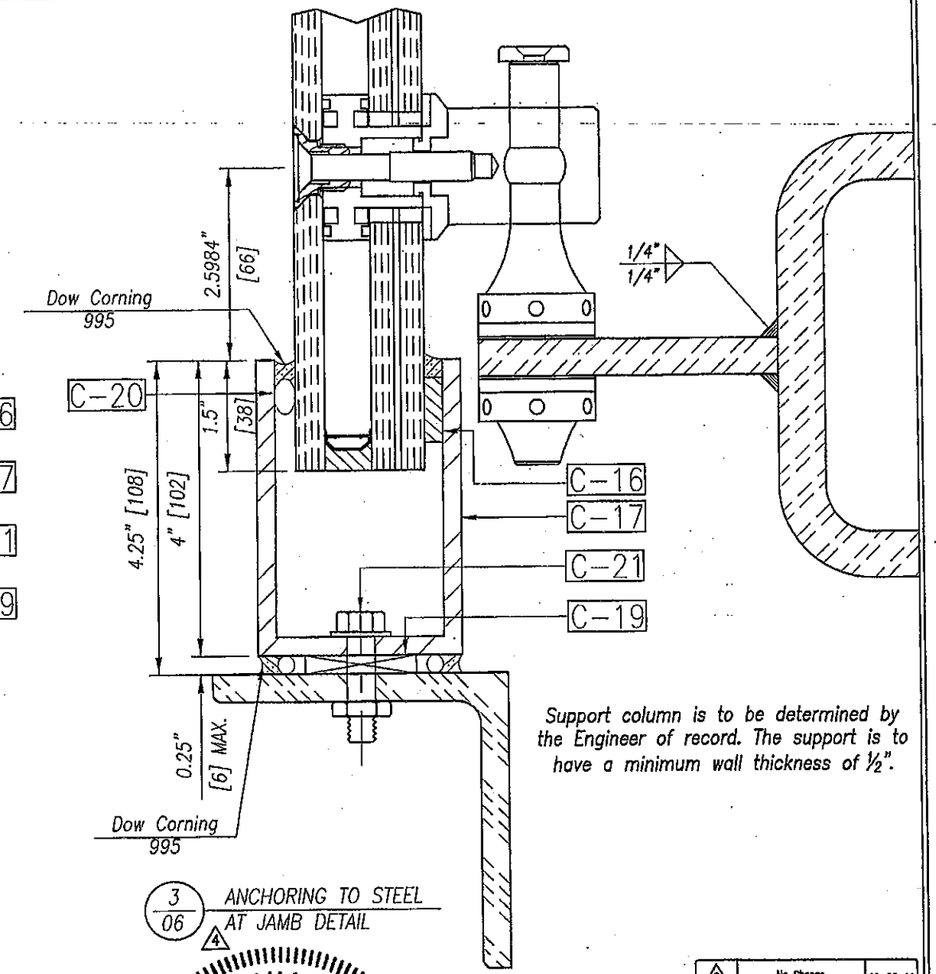

Support column is to be determined by the Engineer of record. The support is to have a minimum wall thickness of ½".

3/06 4 ANCHORING TO STEEL AT JAMB DETAIL

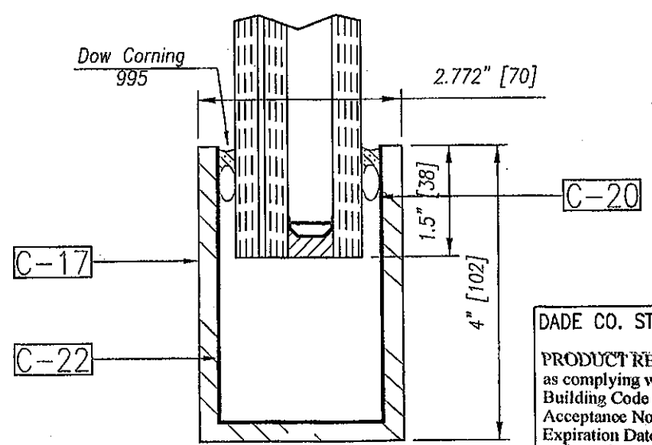

4/06 4 PERIMETER-CHANNEL AT SPLICE DETAIL

C-16	$\frac{1}{4}$"x$\frac{7}{8}$" EPDM
C-17	2.772" wide x 4" high x $\frac{1}{4}$" wall Aluminum Channel
C-18	$\frac{1}{2}$" Hilti Kwik Bolt TZ, install at 18" maximum c/c spacing INSTALLATION TO BE IN ACCORDANCE WITH ESR-1917 AS PUBLISHED BY THE ICC-ES EVALUATION SERVICE
C-19	$\frac{1}{4}$" shim (+$\frac{1}{8}$",-$\frac{1}{4}$")
C-20	Backer Rope
C-21	$\frac{3}{8}$"-16 Hex Bolt,(Install wrench tight) install at 18" maximum c/c spacing

ETHAN A. CHARPENTIER
LICENSE
No. 65106
STATE OF FLORIDA
PROFESSIONAL ENGINEER
DEC 08 2011

Rev.	Details	Date
6	No Change	12-05-11
5	CHANGE TEXT SIZE	02-22-11
4	CHANGE PAGE TOTAL DELETE PLYWOOD	02-09-11
3	Revise to show plywood	01-12-11
2	Revise page number	01-07-11
1	SPECIFIED DOW CORNING 995, SPECIFIED ANCHOR SPACING, ADDED 3/06 TO SHOW SPLICE DETAIL	05-14-10

DADE CO. STAMP

PRODUCT REVISED
as complying with the Florida Building Code
Acceptance No 11-1213.11
Expiration Date March 10, 2016
By Miami Dade Product Control

ENGINEER STAMP

Florida Firm No. F-02000005175
Certificate of Authorization #9803
Ethan A. Charpentier
Registration No. 65106

Larson Engineering, Inc.
3524 Labore Road
White Bear Lake, MN 55110
(P) 651.481.9120 (F) 651.481.9201

Project: LARGE MISSILE POINT SUPPORTED GLASS SYSTEM

Scale: 1:2 [ANSI D]

Drawn by: GM

Date: 03-16-09

Drawing No. HT 2008

Sheet No. 06 of 12 4

PILKINGTON PLANAR BY W&W

W&W GLASS LLC
302 AIRPORT EXEC. PARK
NANUET, NEW YORK, 10954-5285
1-800-452-7925
(845) 425-4000 (NYS)
FAX: (845) 425-6156

Configuration D - Laminated glass with column support

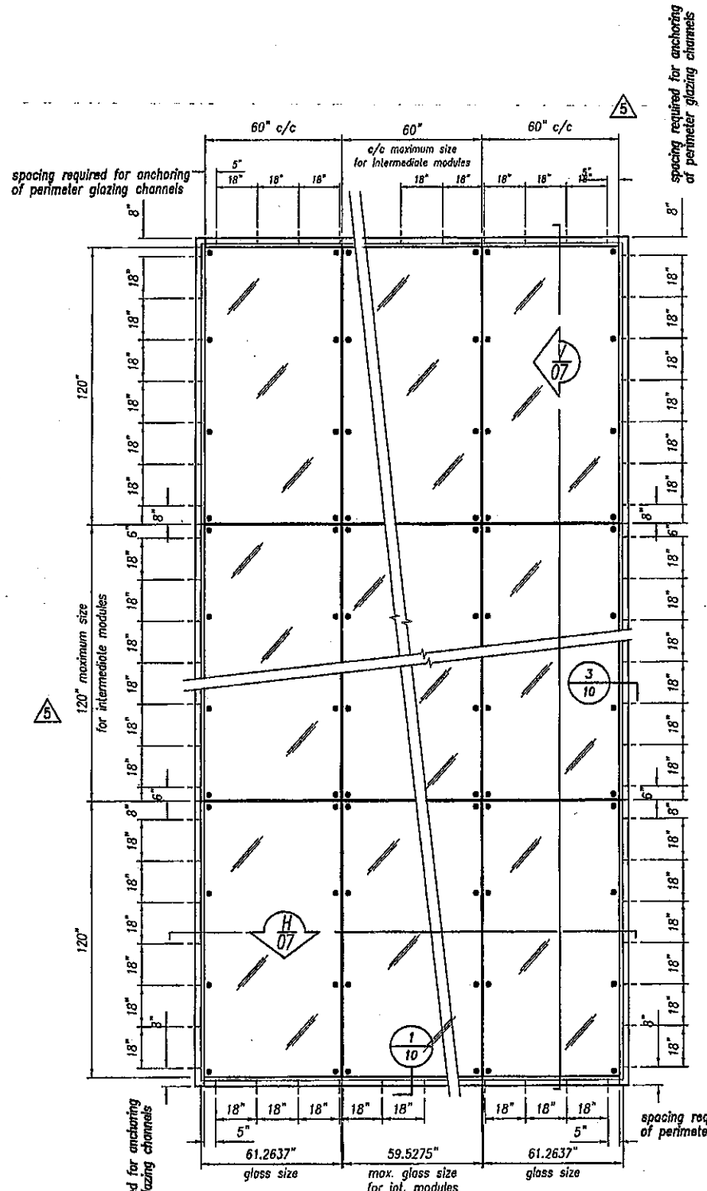

H/07 FULL HORIZONTAL CROSS SECTION PLAN

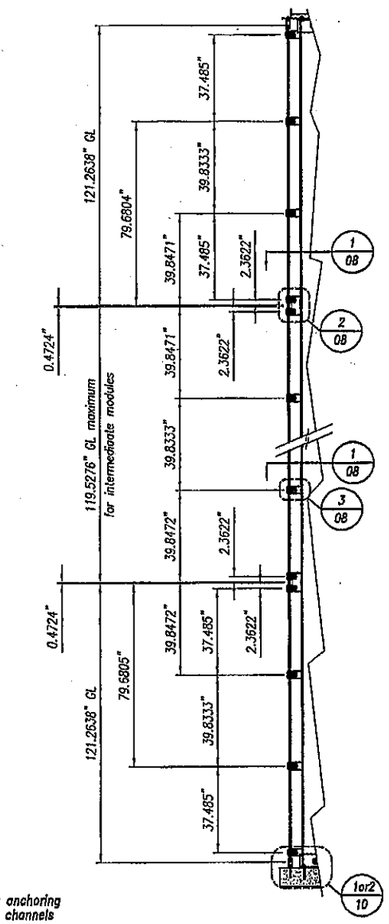

V/07 FULL VERTICAL CROSS SECTION

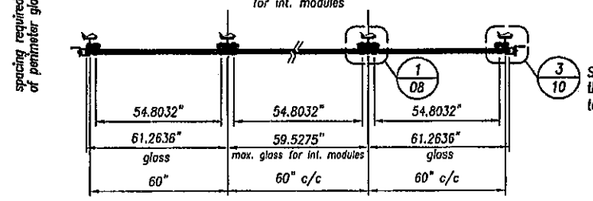

Support column is to be determined by the Engineer of record. The support is to have a minimum wall thickness of ½".

GLASS TYPE

13/16" (20.28mm) Single Glazed Laminated unit comprised of:
- 3/8" (10mm) Clear (Tempered) 5
- 0.090" (2.28mm) SGP Interlayer
- 5/16" (8mm) Clear (Tempered) 5

SYSTEM APPLICATION GUIDELINES:

- **MAXIMUM DIMENSIONS OF 8-POINT SUPPORTED GLASS:**
  WIDTH = 60"
  HEIGHT = 120" (NOTE: IF THE GLASS DIMENSION IS LESS THAN 120" THE VERTICAL DIMENSION BETWEEN FITTINGS CANNOT EXCEED THE MAXIMUM OF 39 13/16") 1
- WALL COLUMN STIFFNESS TO BE DETERMINED BASED ON COLUMN LENGTH TO BE APPROVED BY THE STRUCTURAL ENGINEER OF RECORDS
- SELECT CHANNEL ANCHORAGE TO BE APPROVED BY THE STRUCTURAL ENGINEER OF RECORDS

GENERAL NOTES:

- DC995 SILICONE VERTICAL & HORIZONTAL JOINTS ARE TESTED TO 100 PSF
- WALL COLUMN ANCHORAGE IS NOT PART OF THIS SUBMISSION, BUT MUST BE APPROVED BY ENGINEER OF RECORDS AND PASS STRUCTURAL INSPECTION
- ASTM E1300 DOES NOT APPLY
- ALL TEMPERED GLASS SUPPLIED IN THE PILKINGTON PLANAR STYSTEM 5 SHALL BE HEAT SOAK TESTED AFTER TEMPERING. THIS SHALL BE INDICATED ON THE TEMPORARY SUPPLEMENTAL LABEL AS REQUIRED

Rev.	Details	Date
6	No Change	12-05-11
5	EDIT NOTES REMOVE DIMENSIONS	02-22-11
4	ADD BOLD TEXT CHANGE PAGE TOTAL	02-09-11
3	No changes	01-12-11
2	Revise page number	01-07-11
1	ADDED FULL VERTICAL & HORIZONTAL CROSS SECTIONAL, ADDED NOTE, DELETED SHOWN FIXTURES, ADDED ELECTROMAGNETICAL ANCHOR DIAGRAM, LABEL, ADDED NOTES	05-14-10

Larson Engineering, Inc.
3524 Labore Road
White Bear Lake, MN 55110
(P) 651.481.9120 (F) 651.481.9201

ETHAN A. CHARPENTIER LICENSE No. 65106 STATE OF FLORIDA PROFESSIONAL ENGINEER

DEC 08 2011

DADE CO. STAMP

PRODUCT REVISED
as complying with the Florida Building Code
Acceptance No 11-1213.11
Expiration Date MARCH 10, 2016
By Miami-Dade Product Control

ENGINEER STAMP

Florida Firm No. F-02000005175
Certificate of Authorization #9803
Ethan A. Charpentier
Registration No. 65106

Project: LARGE MISSILE POINT SUPPORTED GLASS SYSTEM
Scale: 1:32 [ANSI D]
Drawn by: GM
Date: 03-16-09
Drawing No. HT 2008
Sheet No. 07 of 12

PILKINGTON PLANAR BY W&W

W&W GLASS LLC
302 AIRPORT EXEC. PARK
NANUET, NEW YORK, 10954-5285
1-800-452-7925
(845) 425-4000 (NYS)
FAX: (845) 425-6156

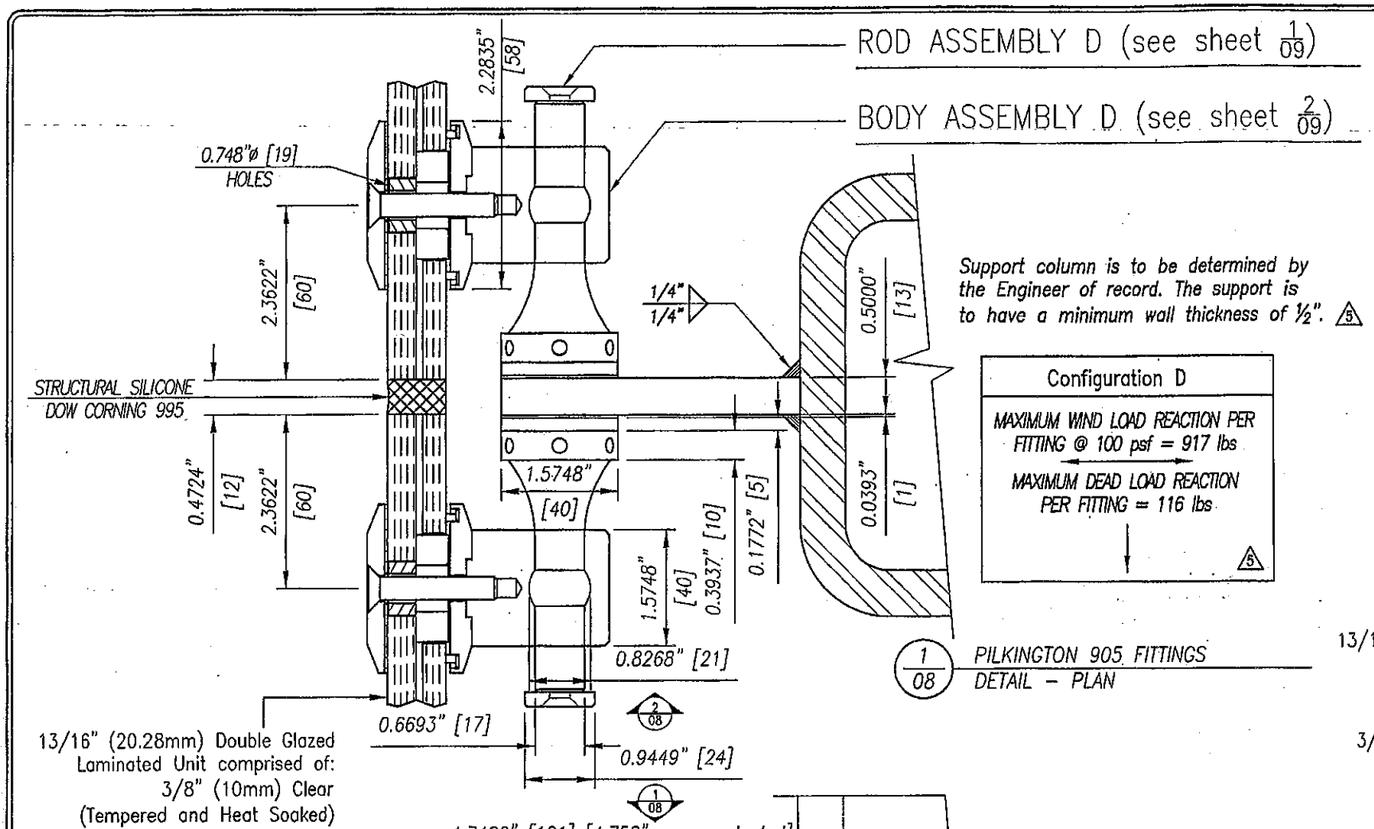

Support column is to be determined by the Engineer of record. The support is to have a minimum wall thickness of ½". 5

Configuration D
MAXIMUM WIND LOAD REACTION PER FITTING @ 100 psf = 917 lbs
MAXIMUM DEAD LOAD REACTION PER FITTING = 116 lbs

5

1/08 PILKINGTON 905 FITTINGS DETAIL – PLAN

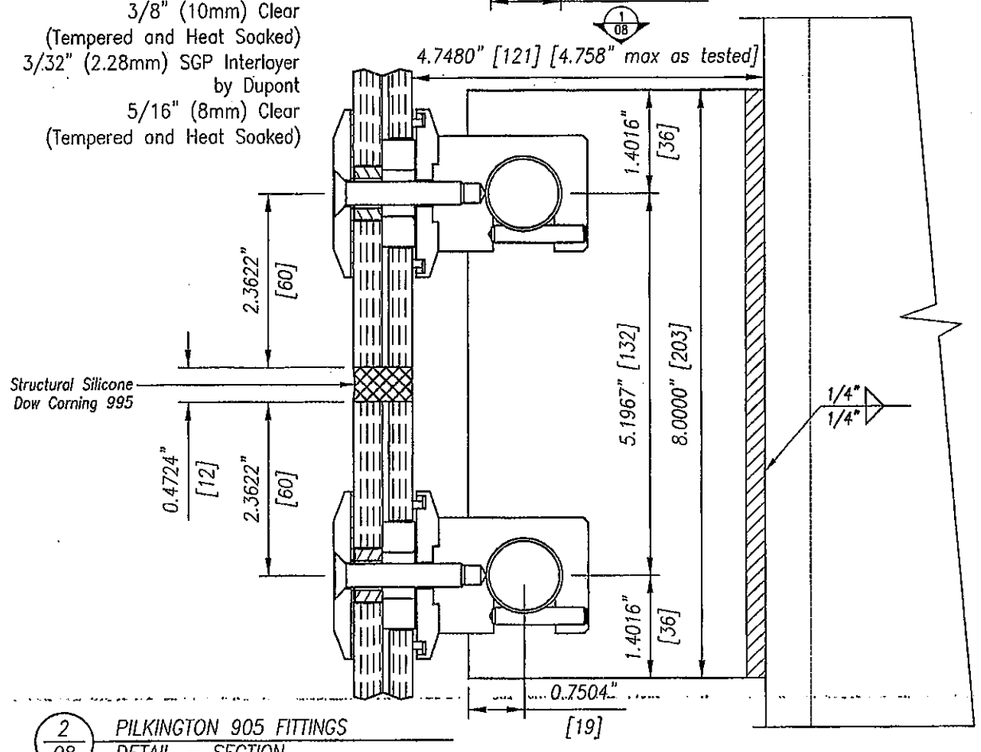

Support column is to be determined by the Engineer of record. The support column is to have a minimum wall thickness of ½". 5

Configuration D
MAXIMUM WIND LOAD REACTION PER FITTING @ 100 psf = 917 lbs
MAXIMUM DEAD LOAD REACTION PER FITTING = 116 lbs

5

2/08 PILKINGTON 905 FITTINGS DETAIL – SECTION

Support column is to be determined by the Engineer of record. The support is to have a minimum wall thickness of ½".

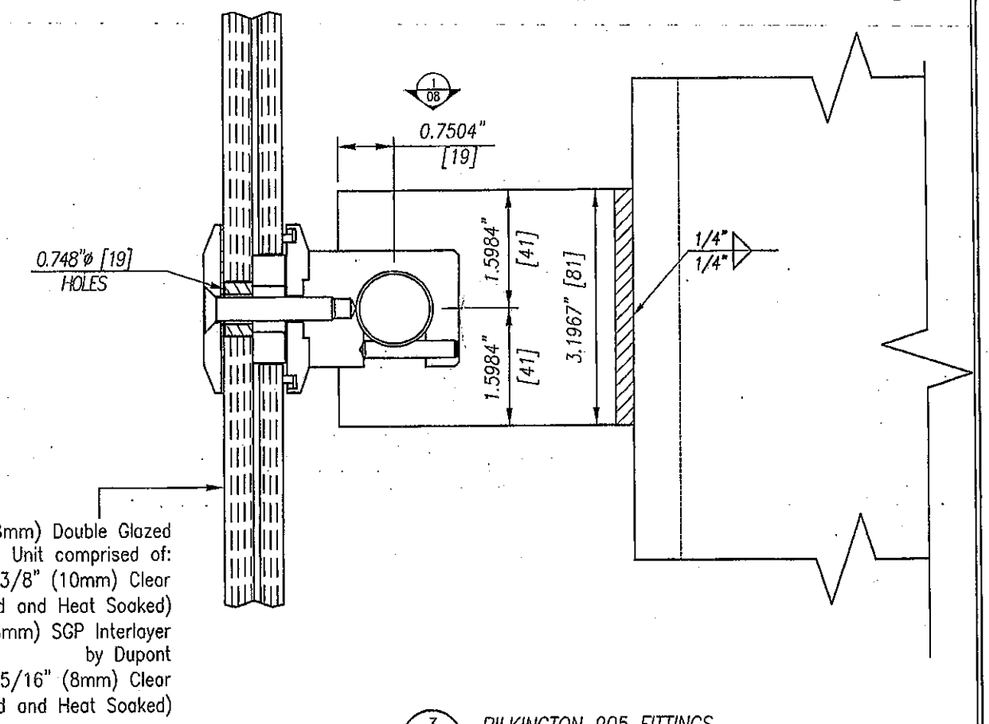

3/08 PILKINGTON 905 FITTINGS DETAIL – SECTION

ETHAN A. CHARPENTIER LICENSE No. 65106 STATE OF FLORIDA PROFESSIONAL ENGINEER

DEC 0 8 2011

Rev.	Details	Date
6	No Change	12-05-11
5	CHANGE TEXT SIZE	02-22-11
4	CHANGE PAGE TOTAL	02-09-11
3	No changes	01-12-11
2	Revise page number	01-07-11
1	USED STANDARD GLASS THICKNESS DESIGNATION, CHANGED TEXT SIZE, SPECIFIED REQUESTED DIMENSIONS, SPECIFIED WELD ADDED 3/07	05-14-10

DADE CO. STAMP

PRODUCT REVISED
as complying with the Florida Building Code
Acceptance No 11-1213.11
Expiration Date MARCH 10, 2016
By Manuel Perez
Miami-Dade Product Control

ENGINEER STAMP

Florida Firm No. F-02000005175
Certificate of Authorization #9803
Ethan A. Charpentier
Registration No. 65106

Larson Engineering, Inc.
3524 Labore Road
White Bear Lake, MN 55110
(P) 651.481.9120 (F) 651.481.9201

Project: LARGE MISSILE POINT SUPPORTED GLASS SYSTEM

Scale: 1:2 [ANSI D]

Drawn by: GM | Date: 03-16-09

Drawing No. HT 2008
Sheet No. 08 of 12 4

PILKINGTON PLANAR BY W&W
W&W GLASS LLC
302 AIRPORT EXEC. PARK.
NANUET, NEW YORK, 10954-5285
1-800-452-7925
(845) 425-4000 (NYS)
FAX: (845) 425-6156

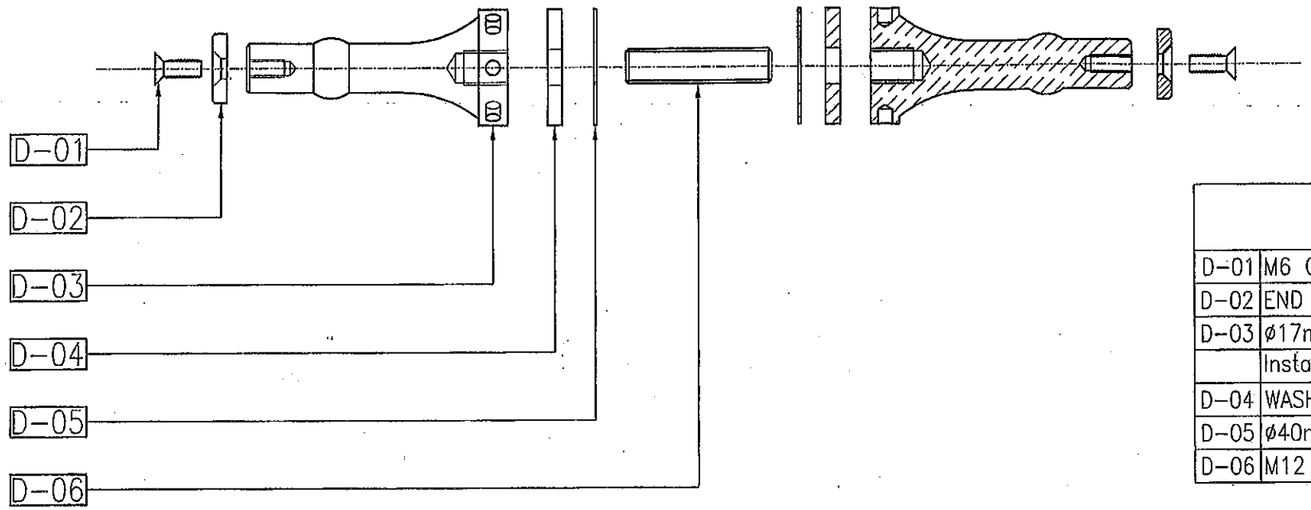

1/09 PILKINGTON ROD ASSEMBLY D DETAIL

ROD ASSEMBLY D	
D-01	M6 CSK. SOCKET HEAD SCREW
D-02	END CAP
D-03	ø17mm 905 SEISMIC ROD with ø21mm BALL
	Install the seismic rod nut using a torque of 37 ft. lbs.
D-04	WASHER
D-05	ø40mm GASKET
D-06	M12 STUD

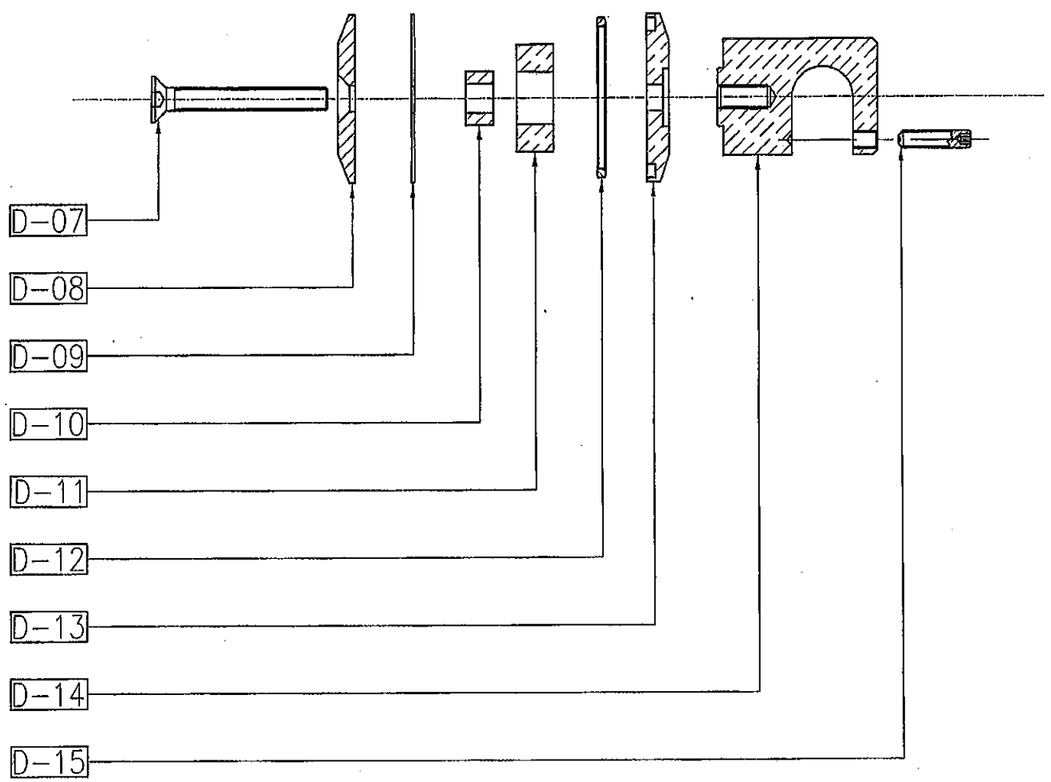

2/09 PILKINGTON BODY ASSEMBLY D DETAIL

BODY ASSEMBLY D	
D-07	M8 SCREW (installation torque to be 12 ft. lbs)
D-08	ø58mm CAP
D-09	GASKET
D-10	SPACER
D-11	BUSH
D-12	O RING
D-13	ø58mm FLANGE
D-14	ø40mm 905 BODY
D-15	SOCKET SET SCREW

ETHAN A. CHARPENTIER
LICENSE
No. 65106
STATE OF FLORIDA
PROFESSIONAL ENGINEER
DEC 08 2011

Rev.	Details	Date
6	No Change	12-05-11
5	NO CHANGES	02-22-11
4	CHANGE PAGE TOTAL	02-09-11
3	Revise descriptions	01-12-11
2	Revise page number	01-07-11
1	NO CHANGES	05-14-10

DADE CO. STAMP

PRODUCT REVISED
as complying with the Florida
Building Code
Acceptance No 11-1213.11
Expiration Date ~~March 10, 2016~~
By Manuel Sera
Miami-Dade Product Control

ENGINEER STAMP

Florida Firm No. F-02000005175
Certificate of Authorization #9803
Ethan A. Charpentier
Registration No. 65106

Larson Engineering, Inc.
3524 Labore Road
White Bear Lake, MN 55110
(P) 651.481.9120 (F) 651.481.9201

Project
LARGE MISSILE POINT SUPPORTED GLASS SYSTEM

Scale 1:2 [ANSI D]

Drawn by GM

Date 03-16-09

Drawing No. HT 2008

Sheet No. 09 of 12 4

PILKINGTON PLANAR BY W&W

W&W GLASS LLC
302 AIRPORT EXEC. PARK
NANUET, NEW YORK, 10954-5285
1-800-452-7925
(845) 425-4000 (NYS)
FAX: (845) 425-6156

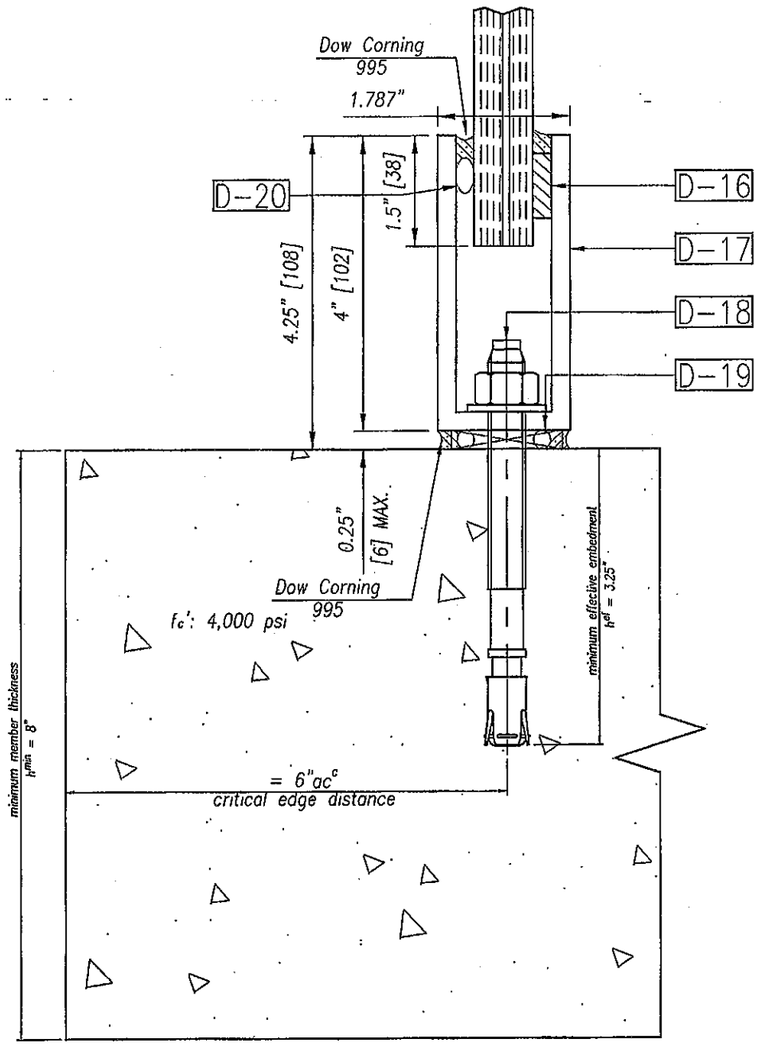

1/10 ANCHORING TO CONCRETE TO JAMB, HEAD OR SILL DETAIL

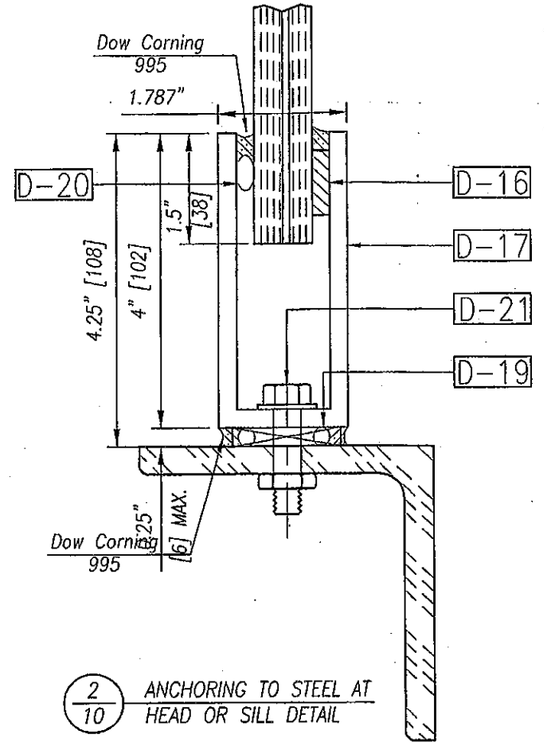

2/10 ANCHORING TO STEEL AT HEAD OR SILL DETAIL

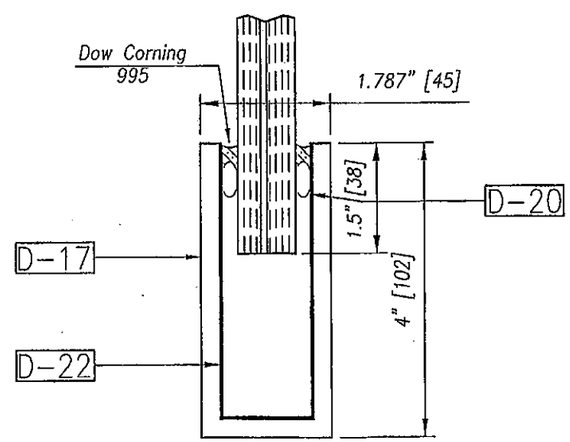

4/10 PERIMETER CHANNEL AT SPLICE DETAIL

MAXIMUM SHEAR REACTION PER ANCHOR/BOLT @ 100 psf & 18" c/c SPACING = 375 lbs 5

MAXIMUM TENSION REACTION PER ANCHOR/BOLT @ 100 psf & 18" c/c SPACING = 2,000 lbs 5

Support column is to be determined by the Engineer of record. The support is to have a minimum wall thickness of ½".

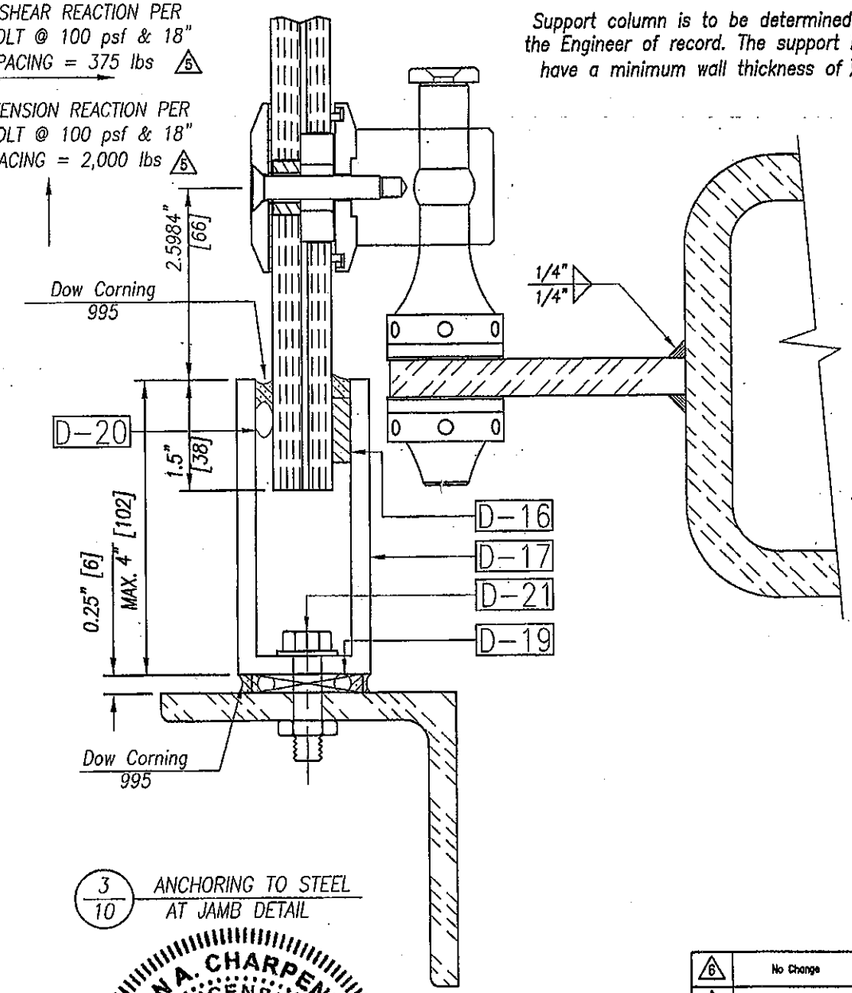

3/10 ANCHORING TO STEEL AT JAMB DETAIL

D-16	$\frac{1}{4}$"x$\frac{7}{8}$" EPDM	
D-17	1.787" wide x 4" high x 1/4" wall Extruded Aluminum Channel	
D-18	$\frac{1}{2}$" Hilti Kwik Bolt TZ, INSTALL AT 18" C/C MAX. INSTALLATION TO BE IN ACCORDANCE WITH ESR-1917 AS PUBLISHED BY THE ICC-ES EVALUATION SERVICE	
D-19	$\frac{1}{4}$" shim ($+\frac{1}{8}$",$-\frac{1}{4}$")	
D-20	Backer Rope	
D-21	$\frac{5}{8}$"-16 Hex Bolt (Install wrench tight) INSTALL AT 18" C/C MAXIMUM	

ETHAN A. CHARPENTIER
LICENSE
No. 65106
STATE OF FLORIDA
PROFESSIONAL ENGINEER

DEC 0 8 2011

Rev.	Details	Date
6	No Change	12-05-11
5	CHANGE TEXT SIZE	02-22-11
4	CHANGE PAGE TOTAL DELETE PLYWOOD	02-09-11
3	Revise to show plywood	01-12-11
2	Revise page number	01-07-11
1	SPECIFIED DOW CORNING 995, SPECIFIED ANCHOR SPACING, ADDED 3/09 TO SHOW SPLICE DETAX.	05-14-10

DADE CO. STAMP

PRODUCT REVISED
as complying with the Florida Building Code
Acceptance No 11-1213.11
Expiration Date March 10.2016
By Manuel Perez
Miami Dade Product Control

ENGINEER STAMP

Florida Firm No. F-02000005175
Certificate of Authorization #9803
Ethan A. Charpentier
Registration No. 65106

Larson Engineering, Inc.
3524 Labore Road
White Bear Lake, MN 55110
(P) 651.481.9120 (F) 651.481.9201

Project: LARGE MISSILE POINT SUPPORTED GLASS SYSTEM

Scale: 1:2 [ANSI D]

Drawn by: GM

Date: 03-16-09

Drawing No. HT 2008

Sheet No. 10 of 12 4

PILKINGTON PLANAR BY W&W

W&W GLASS LLC
302 AIRPORT EXEC. PARK.
NANUET, NEW YORK, 10954-5285
1-800-452-7925
(845) 425-4000 (NYS)
FAX: (845) 425-6156

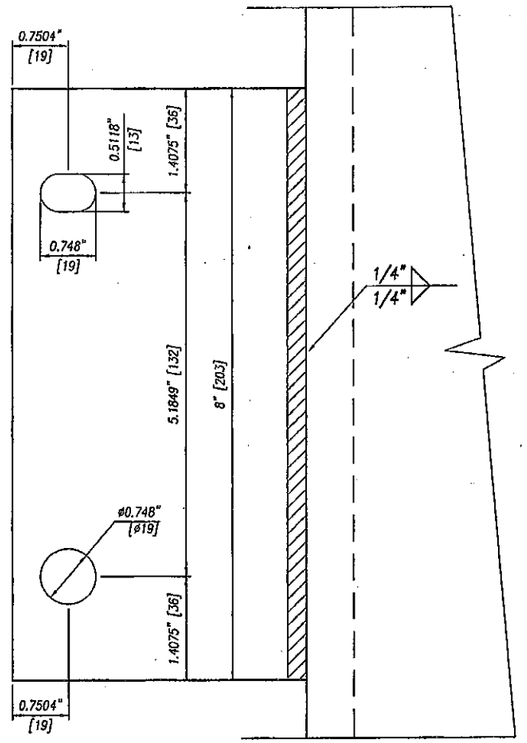

1/11 DOUBLE GUSSET LAYOUT
DETAIL – SECTION

Support column is to be determined by the Engineer of record. The support is to have a minimum wall thickness of ½".

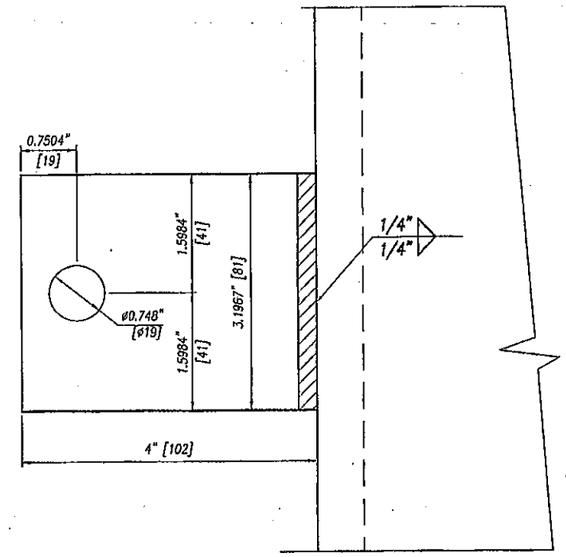

3/04 SINGLE GUSSET LAYOUT
DETAIL – SECTION

Support column is to be determined by the Engineer of record. The support is to have a minimum wall thickness of ½".

ETHAN A. CHARPENTIER
LICENSE
No. 65106
STATE OF FLORIDA
PROFESSIONAL ENGINEER
DEC 08 2011

Rev.	Details	Date
6	No Change	12-05-11
5	NO CHANGES	02-22-11
4	NEW DRAWING CHANGE PAGE TOTAL	02-09-11
3	add references & revise detail numbers	01-12-11
2	New drawing	01-07-11
1	Not issued	05-14-11

Larson Engineering, Inc.
3524 Laborc Road
White Bear Lake, MN 55110
(P) 651.481.9120 (F) 651.481.9201

DADE CO. STAMP

PRODUCT REVISED
as complying with the Florida Building Code
Acceptance No 11-1213.11
Expiration Date MARCH 10, 2016
By Manuel Perez
Miami Dade Product Control

ENGINEER STAMP

Florida Firm No. F-02000005175
Certificate of Authorization #9803
Ethan A. Charpentier
Registration No. 65106

Project
LARGE MISSILE POINT SUPPORTED GLASS SYSTEM

Scale 1:2 [ANSI D]

Drawn by	Date
GM	03-16-09

Drawing No. HT 2008
Sheet No. 11 of 12 (4)

PILKINGTON PLANAR BY W&W

W&W GLASS LLC
302 AIRPORT EXEC. PARK
NANUET, NEW YORK, 10954-5285
1-800-452-7925
(845) 425-4000 (NYS)
FAX: (845) 425-6156

Configuration C3 - Insulated glass units with column support

GLASS TYPE

1 3/4" (44.28mm) Double Glazed Laminated unit comprised of:
- 3/8" (10mm) Clear (Tempered) △5
- 5/8" (16mm) Airspace
- 5/16" (8mm) Clear (Tempered) △5
- 0.090" (2.28mm) SGP Interlayer
- 5/16" (8mm) Clear (Tempered) △5

SYSTEM APPLICATION GUIDELINES:

- **MAXIMUM DIMENSIONS OF 4-POINT SUPPORTED GLASS:**
  WIDTH = 60"
  HEIGHT = 60"
- **MAXIMUM DIMENSIONS OF 8-POINT SUPPORTED GLASS:**
  WIDTH = 60" OR **WIDTH = 120"**
  HEIGHT = 120" **HEIGHT = 60"**
- WALL COLUMN STIFFNESS TO BE DETERMINED BASED ON COLUMN LENGTH TO BE APPROVED BY THE STRUCTURAL ENGINEER OF RECORDS
- SELECT CHANNEL ANCHORAGE TO BE APPROVED BY THE STRUCTURAL ENGINEER OF RECORDS

GENERAL NOTES:

- DC995 SILICONE VERTICAL & HORIZONTAL JOINTS ARE TESTED TO 100 PSF
- WALL COLUMN ANCHORAGE IS NOT PART OF THIS SUBMISSION, BUT MUST BE APPROVED BY ENGINEER OF RECORDS AND PASS STRUCTURAL INSPECTION
- ASTM E1300 DOES NOT APPLY
- △5 ALL TEMPERED GLASS SUPPLIED IN THE PILKINGTON PLANAR STYSTEM SHALL BE HEAT SOAK TESTED AFTER TEMPERING. THIS SHALL BE INDICATED ON THE TEMPORARY SUPPLEMENTAL LABEL AS REQUIRED

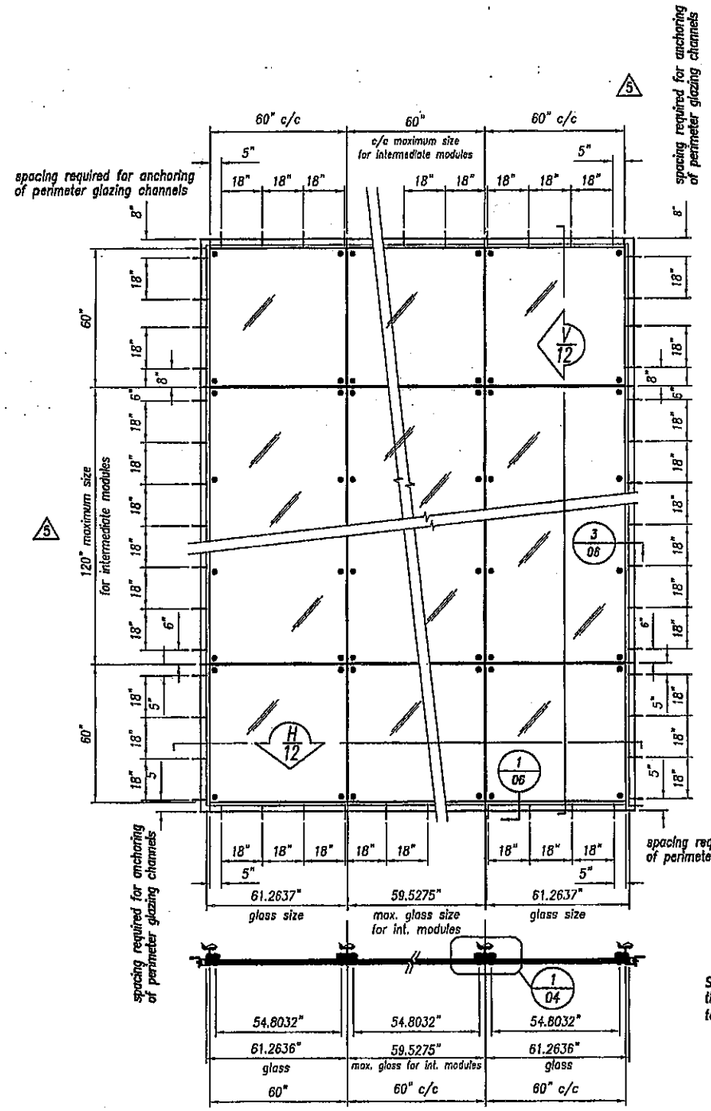

H/12 FULL HORIZONTAL CROSS SECTION PLAN

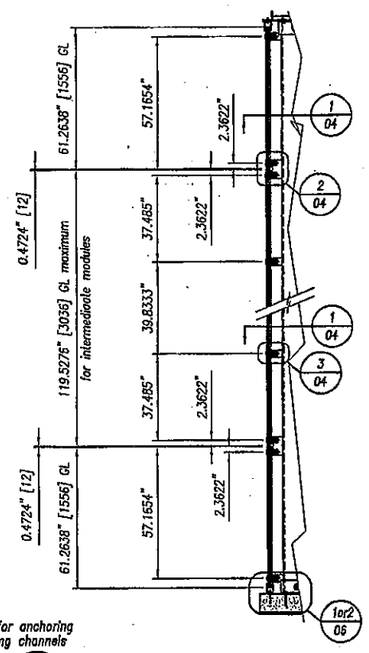

V/12 FULL VERTICAL CROSS SECTION SECTION

Support column is to be determined by the Engineer of record. The support is to have a minimum wall thickness of ½".

ETHAN A. CHARPENTIER LICENSE No. 65106 STATE OF FLORIDA PROFESSIONAL ENGINEER

DEC 0 8 2011

Rev.	Details	Date
△6	No Change	12-05-11
△5	CHANGE TEXT SIZE EDIT NOTES REMOVE DIMENSIONS	02-22-11
△4	New Drawing	02-09-11
△3	Not Issued	01-12-11
△2	Not Issued	01-07-11
△1	Not Issued	05-14-10

Larson Engineering, Inc.
3524 Labore Road
White Bear Lake, MN 55110
(P) 651.481.9120 (F) 651.481.9201

DADE CO. STAMP

PRODUCT REVISED as complying with the Florida Building Code
Acceptance No 11-1213.11
Expiration Date MARCH 10, 2016
By Manuel Perez
Miami Dade Product Control

ENGINEER STAMP

Florida Firm No. F-02000005175
Certificate of Authorization #9803
Ethan A. Charpentier
Registration No. 65106

Project: LARGE MISSILE POINT SUPPORTED GLASS SYSTEM

Scale: 1:32 [ANSI D]

Drawn by: GM

Date: 03-16-09

Sheet No. Drawing No. HT 2008
Sheet No. 12 of 12 △4

PILKINGTON PLANAR BY W&W
W&W GLASS LLC
302 AIRPORT EXEC. PARK
NANUET, NEW YORK, 10954-5285
1-800-452-7925
(845) 425-4000 (NYS)
FAX: (845) 425-6156