MIAMI-DADE COUNTY
DEPARTMENT OF PERMITTING, ENVIRONMENT, AND REGULATORY AFFAIRS (PERA)
BOARD AND CODE ADMINISTRATION DIVISION

NOTICE OF ACCEPTANCE (NOA)

MIAMI-DADE COUNTY
PRODUCT CONTROL SECTION
11805 SW 26 Street, Room 208
Miami, Florida 33175-2474
T (786) 315-2590 F (786) 315-2599
www.miamidade.gov/pera/

Miami Wall Systems, Inc.
701 West 25 Street
Hialeah, FL 33010

SCOPE:

This NOA is being issued under the applicable rules and regulations governing the use of construction materials. The documentation submitted has been reviewed and accepted by Miami-Dade County PERA -Product Control Section to be used in Miami Dade County and other areas where allowed by the Authority Having Jurisdiction (AHJ).

This NOA shall not be valid after the expiration date stated below. The Miami-Dade County Product Control Section (In Miami Dade County) and/or the AHJ (in areas other than Miami Dade County) reserve the right to have this product or material tested for quality assurance purposes. If this product or material fails to perform in the accepted manner, the manufacturer will incur the expense of such testing and the AHJ may immediately revoke, modify, or suspend the use of such product or material within their jurisdiction. PERA reserves the right to revoke this acceptance, if it is determined by Miami-Dade County Product Control Section that this product or material fails to meet the requirements of the applicable building code.

This product is approved as described herein, and has been designed to comply with the Florida Building Code, including the High Velocity Hurricane Zone.

DESCRIPTION: Series "100" Aluminum Sliding Glass Door w/wo Reinforcements

APPROVAL DOCUMENT: Drawing No. **100-SM**, titled "SGD Series 100(SM)", sheets 1 through 9 of 9, prepared by manufacturer, dated 12/02/08 and last revised on April 22, 2013, signed and sealed by Jorge E. Valdes, P.E., bearing the Miami-Dade County Product Control Revision stamp with the Notice of Acceptance number and expiration date by the Miami-Dade County Product Control section.

MISSILE IMPACT RATING: Small Missile Impact Resistant

Limitations:

1. See Design Pressure charts applicable to OX, XO, OXO and OXXO configurations, in sheet **6** , based on height, width, glazing types **A** or **B** (**wet** glazed, insulated laminated), reinforcement level and w/wo Head Receptor.
2. Units with Head Receptor (w/wo reinforcements) are limited to max. unit height=107" or less and width=48" or less. See load capacity chart (sheet 6). All doors configurations require double anchors at each jamb location (only)
3. See sheet **5A** for Design Pressure for OX or XO configuration with glazing type **C** , Heavy Duty reinforcement and without Head Receptor.

LABELING: Each unit shall bear a permanent label with the manufacturer's name or logo, city, state and series and following statement: "Miami-Dade County Product Control Approved", unless otherwise noted herein.

RENEWAL of this NOA shall be considered after a renewal application has been filed and there has been no change in the applicable building code negatively affecting the performance of this product.

TERMINATION of this NOA will occur after the expiration date or if there has been a revision or change in the materials, use, and/or manufacture of the product or process. Misuse of this NOA as an endorsement of any product, for sales, advertising or any other purposes shall automatically terminate this NOA. Failure to comply with any section of this NOA shall be cause for termination and removal of NOA.

ADVERTISEMENT: The NOA number preceded by the words Miami-Dade County, Florida, and followed by the expiration date may be displayed in advertising literature. If any portion of the NOA is displayed, then it shall be done in its entirety.

INSPECTION: A copy of this entire NOA shall be provided to the user by the manufacturer or its distributors and shall be available for inspection at the job site at the request of the Building Official.

This NOA **revises & renews NOA # 08-1208.01** and consists of this page 1 and evidence pages E-1, as well as approval document mentioned above.

The submitted documentation was reviewed by **Ishaq I. Chanda, P.E.**

MIAMI-DADE COUNTY APPROVED

4/25/13

NOA No 11-1219.10
Expiration Date: December 20, 2016
Approval Date: May 02, 2013

NOTICE OF ACCEPTANCE: EVIDENCE SUBMITTED

A. DRAWINGS (Submitted under file # **08-1208.01**)

1. Manufacturer's die drawings and sections (transferred from file # **08-1208.01**).
2. Drawing No. **100-SM**, titled "SGD Series 100(SM)", sheets 1 through 9 of 9, prepared by manufacturer, dated 12/02/08 and last revised on April 22, 2013, signed and sealed by Jorge E. Valdes P.E.

B. TESTS (Submitted under file # **08-1208.01**)

1. Test reports on: 1) Air Infiltration Test, per FBC, TAS 202-94
   2) Uniform Static Air Pressure Test, Loading per FBC TAS 202-94
   3) Water Resistance Test, per FBC, TAS 202-94
   4) Small Missile Impact Test per FBC, TAS 201-94
   5) Cyclic Wind Pressure Loading per FBC, TAS 203-94
   6) Forced Entry Test, per FBC 2411 3.2.1, TAS 202-94

   Along with marked-up drawings and installation diagram of an Aluminum Sliding Glass Door (OXXO), prepared by Fenestration Testing Laboratory, Inc., Test Report No. **FTL- 4913,** dated April 11, 2006, **FTL- 5432,** dated Nov 08, 2007 and **FTL-5689** dated Oct 10, 2008, signed and sealed by Edmundo Largaespada, P.E. and Michael Wenzel, P. E. respectively.
2. Additional test report **#FTL7244** per FBC TAS 201, 202, 203-94 for an OX issued by Fenestration testing dated 03/13/13, signed and sealed by Marlin D. Brinson, P.E.

C. CALCULATIONS

1. Anchor verification calculation dated 04/11/2013, prepared, signed and sealed by Jorge Valdes, P.E.
2. Glazing complies with ASTME-1300-02/04

D. QUALITY ASSURANCE

1. Miami Dade Department of Permitting, Environment, and Regulatory Affairs (PERA).

E. MATERIAL CERTIFICATIONS

1. Notice of Acceptance No. **11-0624.01** issued to DuPont DeNeumours, Inc. for their "Butacite PVB Interlayer", expiring on 12/11/16.

F. STATEMENTS

1. Statement letter of compliance to FBC 2010 and "No financial interest", both dated April 04, 2013, signed & sealed by Jorge Valdes, P.E.
2. Lab compliance statements, part of above referenced test reports.

G. OTHER

1. This NOA **revises & renews NOA # 08-1208.01**, expired on DEC 20, 2016.
2. Test proposal # **13-0001** & # **06-1988-R** issued by RER & BCCO respectively.

Ishaq I. Chanda

Ishaq I. Chanda, P.E.
Product Control Examiner
NOA No 11-1219.10
Expiration Date: December 20, 2016
Approval Date: May 02, 2013

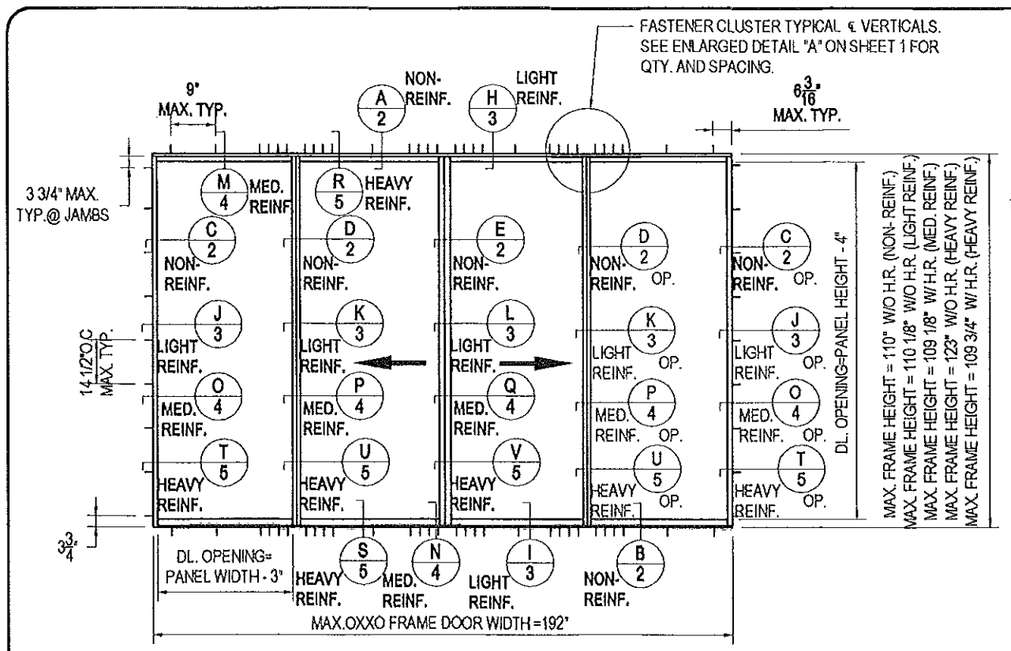

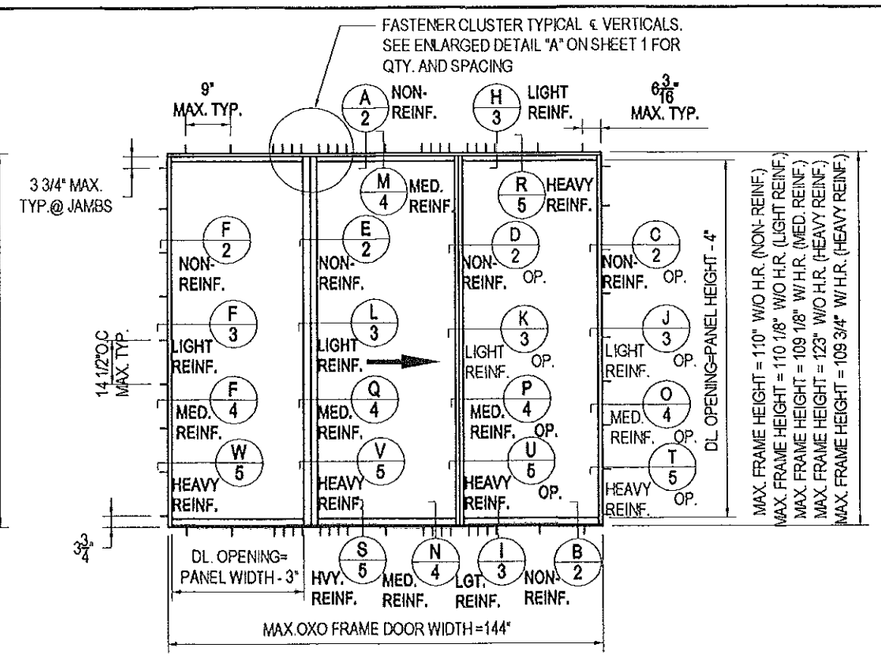

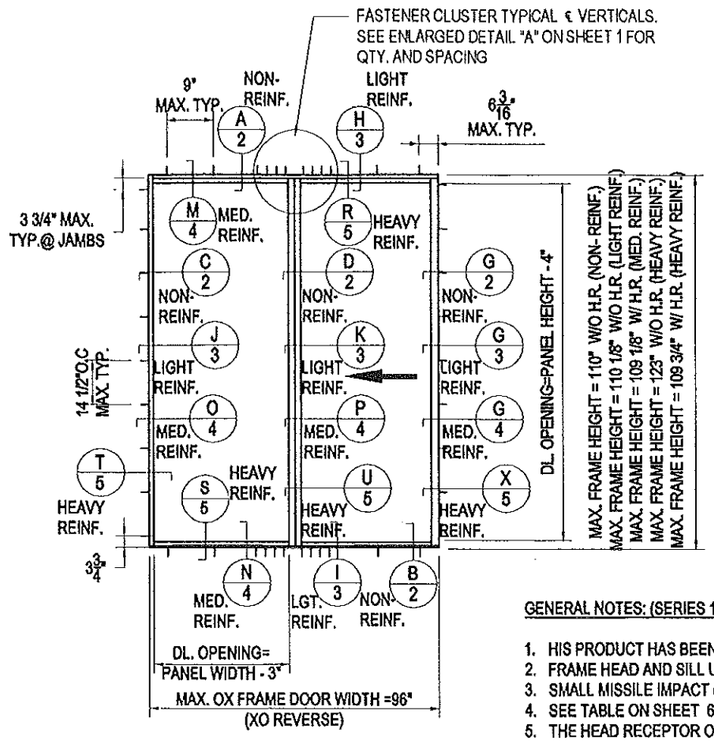

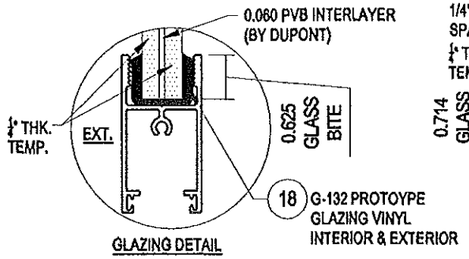

A 1/4" TEMP. GLASS 0.060" BUTACITE PVB BY DUPONT 1/4" TEMP. GLASS

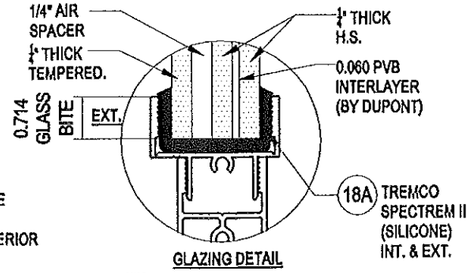

B 1 3/8" O.A. INSULATED LAMINATED GLASS

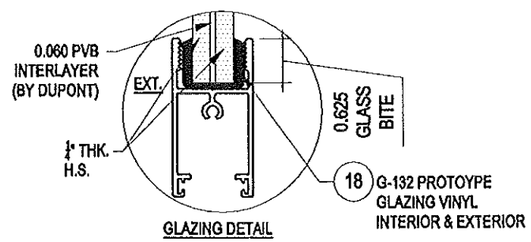

C 1/4" HEAT STR. GLASS 0.060" BUTACITE PVB BY DUPONT 1/4" HEAT STR.GLASS (XO OR OX ONLY)

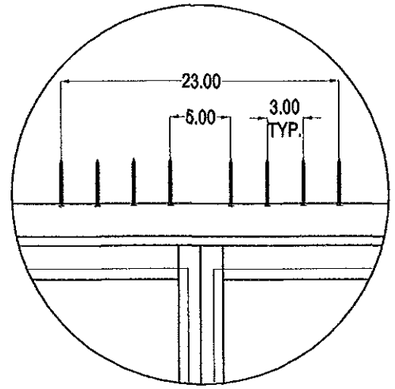

ENLARGED DETAIL "A".

USE CLUSTER OF 8 ANCHORS TYPICAL DETAIL AT INTERLOCK/LOCK STILE/ASTRAGAL (TOP AND BOTTOM)

LEGEND

DL = DAY LIGHT OPENING
HR = HEAD RECEPTOR
W = WITH
W/O = WITHOUT

GENERAL NOTES: (SERIES 100 SGD. W/ REINFORCEMENT- S.M.I.)

1. HIS PRODUCT HAS BEEN DESIGNED & TESTED IN ACCORDANCE WITH THE 2010 FLORIDA BUILDING CODE (HIGH VELOCITY HURRICANE ZONE)
2. FRAME HEAD AND SILL USE SAME FASTENER SPACING. ALL ANCHORS AT JAMBS ARE DOUBLE ROW.
3. SMALL MISSILE IMPACT (SMI): UNIT TO BE INSTALLED ABOVE 30 FT ABOVE THE GRADE WITHOUT SHUTTER REQUIREMENTS.
4. SEE TABLE ON SHEET 6 FOR DESIGN PRESSURE RATING, DIMENSIONS & REINFORCEMENT TYPES.
5. THE HEAD RECEPTOR OPTION WILL BE LIMITED TO MAX. PANEL DIMENSIONS OF 48" WIDE X 107" HIGH. SEE LOAD CHART WITH HEAD RECEPTOR ON SHEET 6 , THEREFORE SHALL NOT BE ALLOWED ON ANY DOOR EXCEEDING ANY OF THESE CONDITIONS.
6. GLASS OPTION "C" ONLY APPLIES TO XO OR OX CONFIGURATIONS.

PRODUCT REVISED
as complying with the Florida Building Code
Acceptance No. 11-1214.10
Expiration Date DEC 20, 2016
By Shaq L. Chandler
Miami Dade Product Control

Jorge E. Valdes
Fla. PE# 67398
C.A.N. 28565

APR 22 2013

Miami Wall Systems, Inc.
701 West 25th Street
Hialeah, Florida. 33010
Phone:(305) 888-2300 Fax:(305) 888-3058

SGD SERIES 100 (SM.)

DOOR ELEVATIONS
GENERAL NOTES

NO.	DATE	REVISION
1	4/2/2013	UPDATE & NEW GLAZING OPTION
2	4/22/2013	PER BCCO COMMENTS

DATE: 12/2/2008
SCALE: AS NOTED
DWG. BY: A.A.G.
CHK. BY: JV
DWG NO.: 100-SM
SHEET 1 OF 9

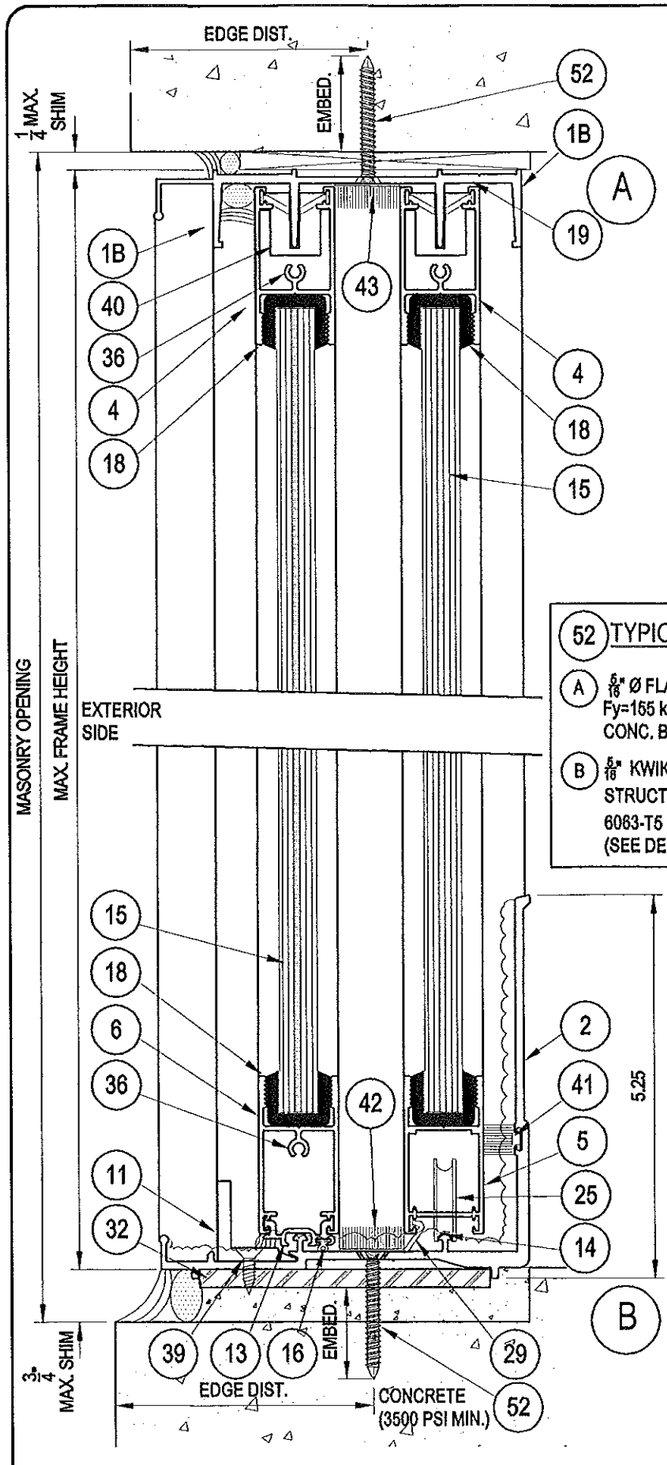

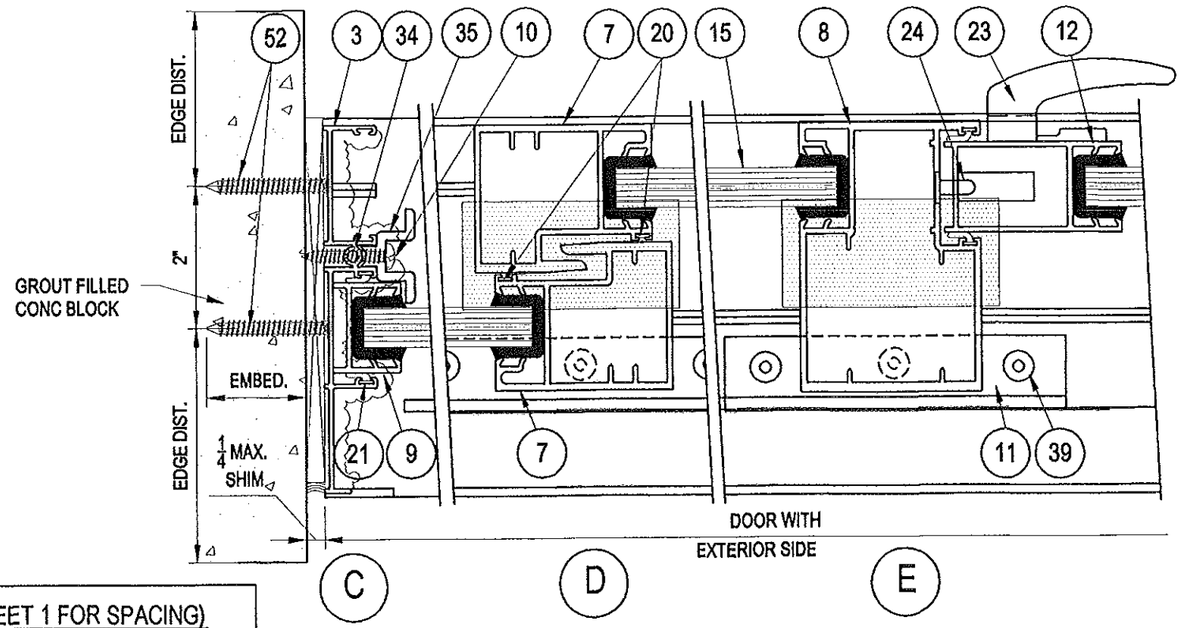

52 TYPICAL ANCHORS (SEE SHEET 1 FOR SPACING)

(A) 5/16" Ø FLAT HEAD ELCO TAPCON W/ 1 3/4" MIN. EMBED., 3 1/8" EDGE DIST. Fy=155 kpsi, Fu=177 kpsi INTO CONCRETE OR GROUT FILLED CONC. BLOCK.

(B) 5/16" KWIK FLEX SCREW BY HILTI OR DRILL - FLEX BY ELCO INTO METAL STRUCTURES WITH 1/8" MIN. THICKNESS (A36 STEEL OR ALUM. ALLOY 6063-T5 MIN.) & 1 1/2" MIN. EDGE DIST., Fy=92 kpsi, Fu=120 kpsi (SEE DETAIL ON SHEET 8)

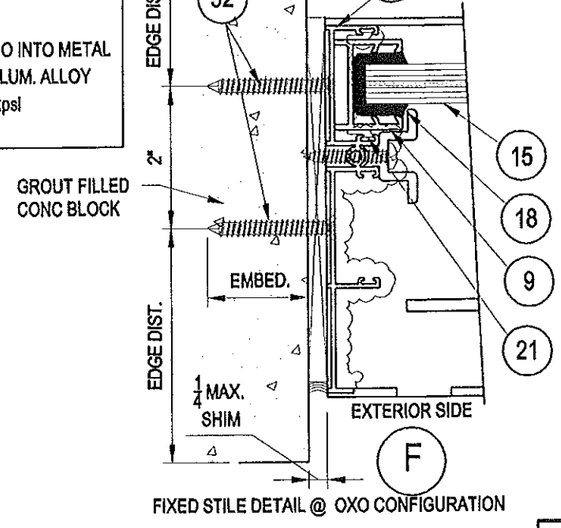

FIXED STILE DETAIL @ OXO CONFIGURATION

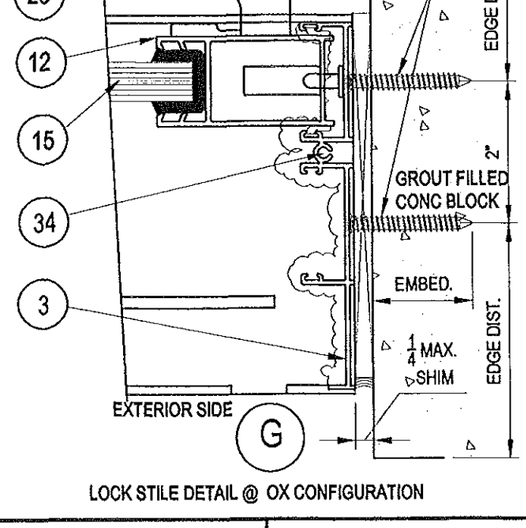

LOCK STILE DETAIL @ OX CONFIGURATION

NON- REINFORCEMENT DOOR DETAILS.

PRODUCT REVISED
as complying with the Florida Building Code
Acceptance No. 11-1219.10
Expiration Date 12/20/16
By Ichag I. Chawla
Miami Dade Product Control

Jorge E. Valdes
Fla. PE# 67398
C.A.N. 28565

APR 22 2013

Miami Wall Systems, Inc.
701 West 25th Street
Hialeah, Florida. 33010
Phone:(305) 888-2300 Fax:(305) 888-3058

NON-REINF. SGD SERIES 100 (SM.)

DOOR DETAILS

NO.	DATE	REVISION
1	4/2/2013	UPDATE & ANCHOR SPEC'S
2	4/22/2013	PER BCCO COMMENTS

DATE: 12/2/2008
SCALE: AS NOTE
DWG. BY: A.A.G.
CHK. BY: JV
DWG NO.: 100-SM
SHEET 2 OF 9

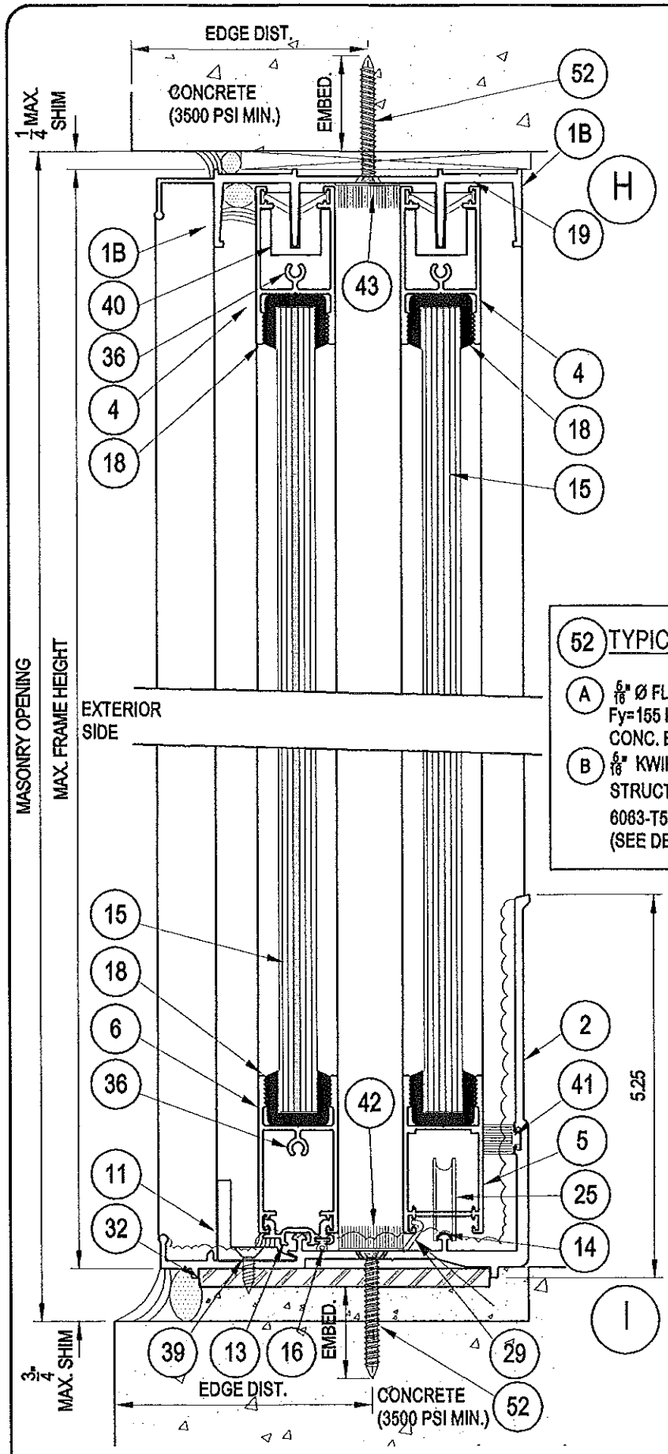

I

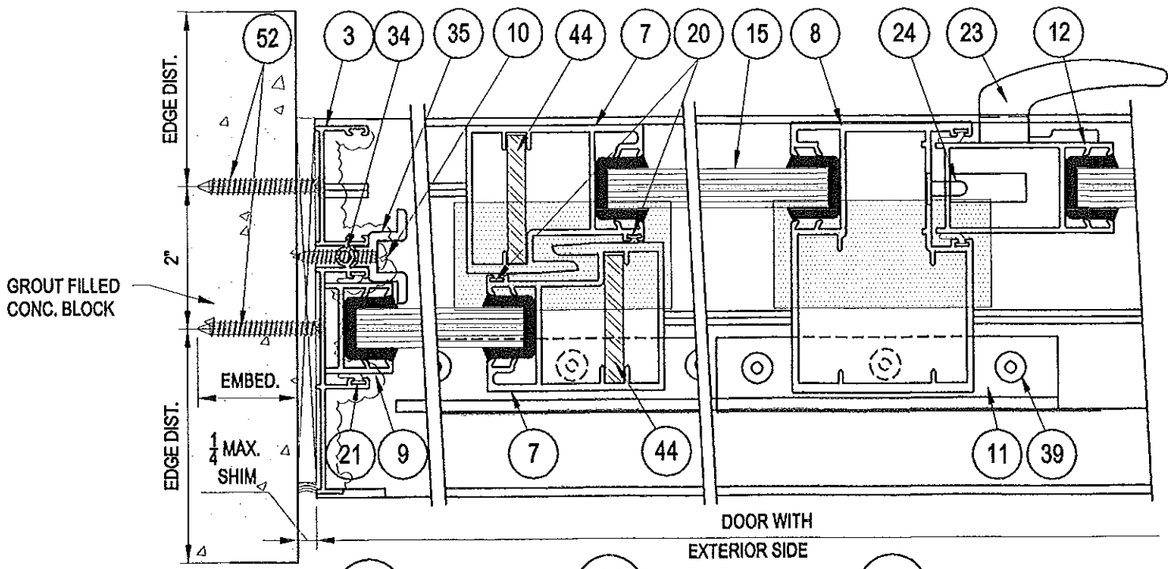

J K L

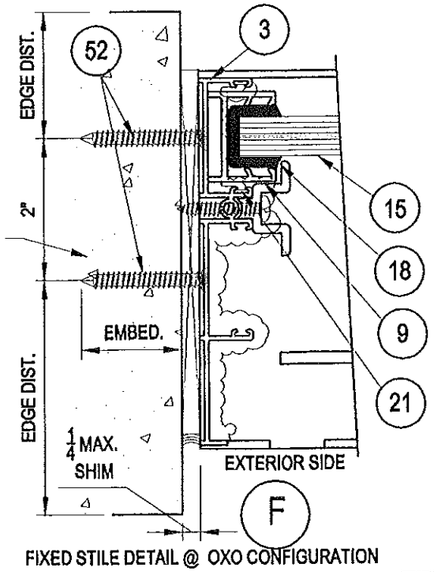

F

FIXED STILE DETAIL @ OXO CONFIGURATION

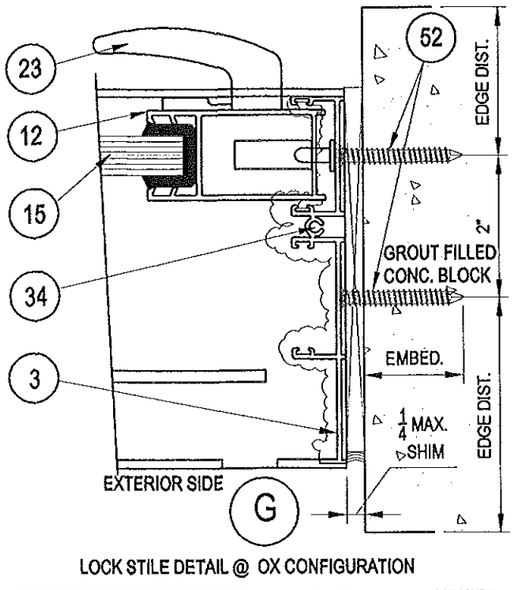

G

LOCK STILE DETAIL @ OX CONFIGURATION

(52) TYPICAL ANCHORS (SEE SHEET 1 FOR SPACING)

(A) $\frac{5}{16}$" Ø FLAT HEAD ELCO TAPCON W/ 1 $\frac{3}{4}$" MIN. EMBED., 3 $\frac{1}{8}$" EDGE DIST. Fy=155 kpsi, Fu=177 kpsi INTO CONCRETE OR GROUT FILLED CONC. BLOCK

(B) $\frac{5}{16}$" KWIK FLEX SCREW BY HILTI OR DRILL - FLEX BY ELCO INTO METAL STRUCTURES WITH $\frac{1}{8}$" MIN. THICKNESS (A36 STEEL OR ALUM. ALLOY 6063-T5 MIN.) & 1 $\frac{1}{2}$" MIN. EDGE DIST., Fy=92 kpsi, Fu=120 kpsi (SEE DETAIL ON SHEET 8)

LIGTH REINFORCEMENT DOOR DETAILS.

PRODUCT REVISED
as complying with the Florida
Building Code
Acceptance No. 11-1219.10
Expiration Date 12/20/16
By Ishaq I. Chanda
Miami Dade Product Control

Jorge E. Valdes
Fla. PE# 67398
C.A.N. 28565

APR 2 2 2013

Miami Wall Systems, Inc.
701 West 25th Street
Hialeah, Florida. 33010
Phone:(305) 888-2300 Fax:(305) 888-3058

LIGHT REINF. SGD SERIES 100 (SM.)

DOOR DETAILS

NO.	DATE	REVISION
1	4/2/2013	UPDATE & ANCHOR SPEC'S
2	4/22/2013	PER BCCO COMMENTS

DATE: 12/2/2008
SCALE: AS NOTE
DWG. BY: A.A.G.
CHK. BY: JV
DWG NO.: 100-SM
SHEET 3 OF 9

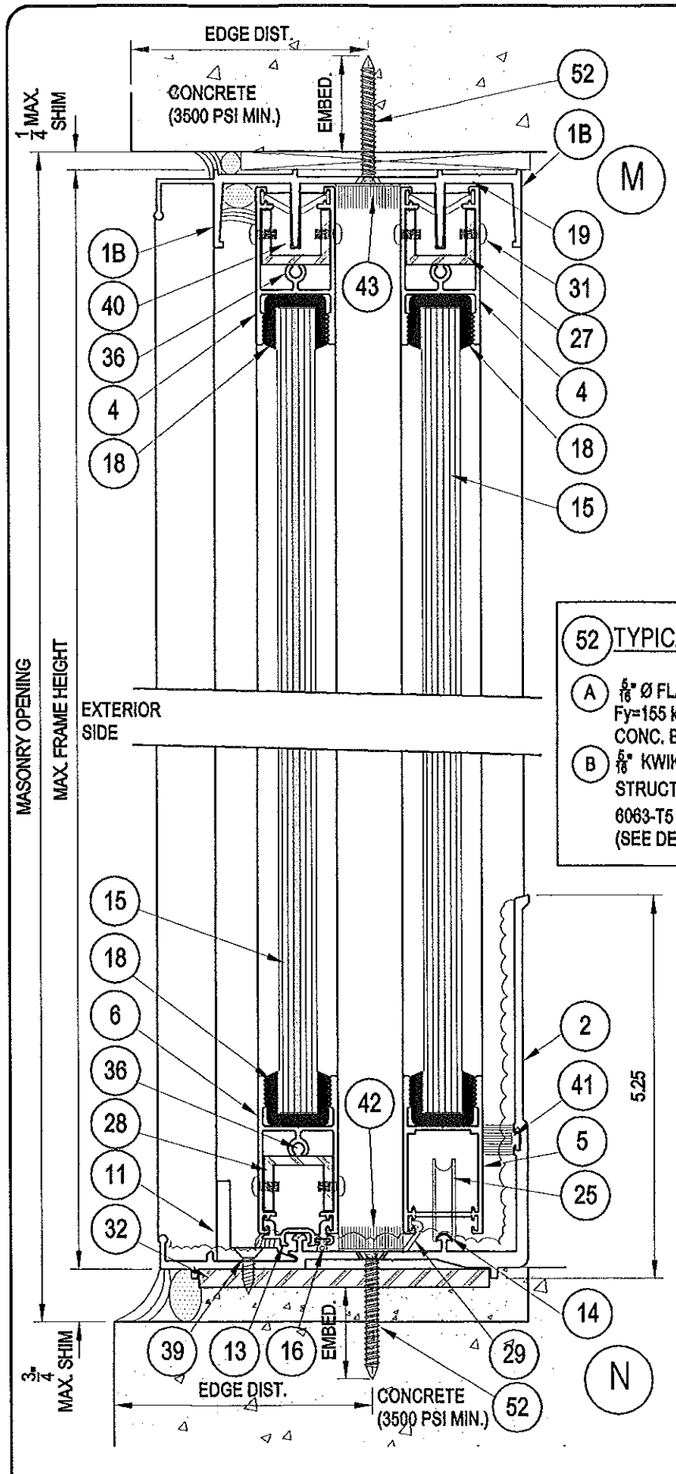

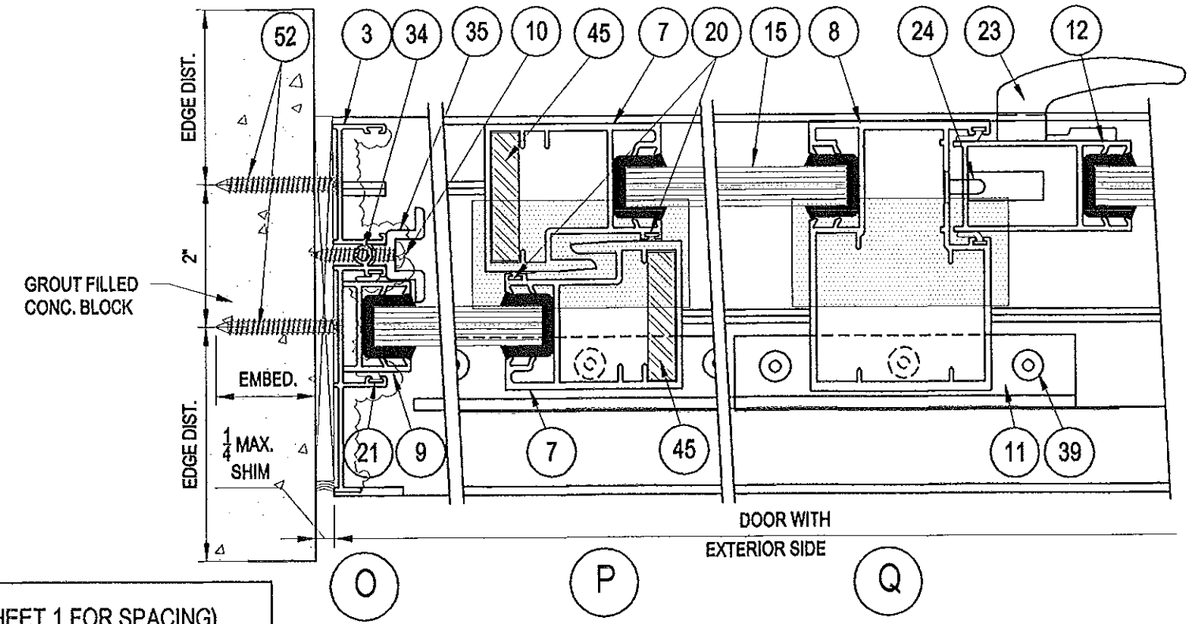

52 TYPICAL ANCHORS (SEE SHEET 1 FOR SPACING)

(A) 5/16" Ø FLAT HEAD ELCO TAPCON W/ 1 3/4" MIN. EMBED., 3 1/8" EDGE DIST. Fy=155 kpsi, Fu=177 kpsi INTO CONCRETE OR GROUT FILLED CONC. BLOCK

(B) 5/16" KWIK FLEX SCREW BY HILTI OR DRILL - FLEX BY ELCO INTO METAL STRUCTURES WITH 1/8" MIN. THICKNESS (A36 STEEL OR ALUM. ALLOY 6063-T5 MIN.) & 1 1/2" MIN. EDGE DIST., Fy=92 kpsi, Fu=120 kpsi (SEE DETAIL ON SHEET 8)

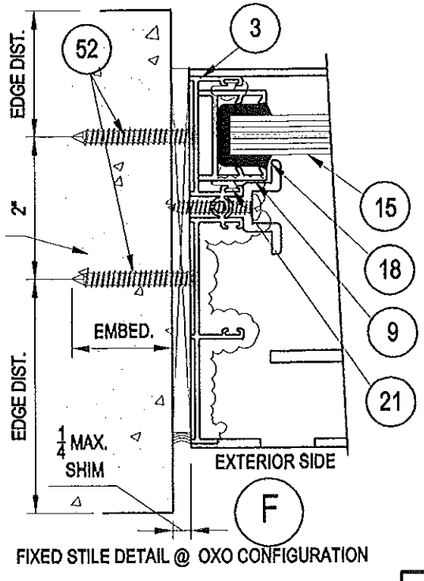

FIXED STILE DETAIL @ OXO CONFIGURATION

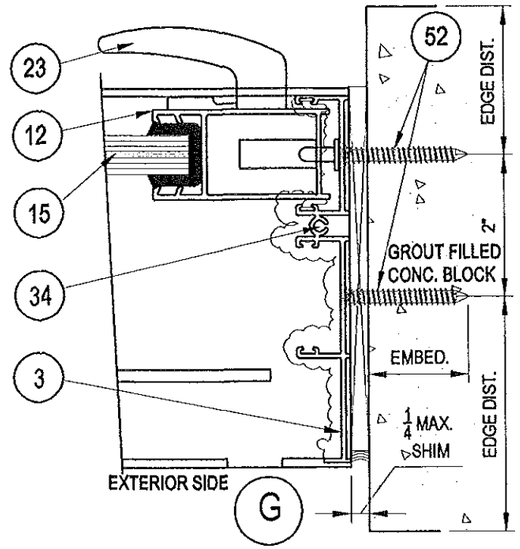

LOCK STILE DETAIL @ OX CONFIGURATION

MEDIUM REINFORCEMENT DOOR DETAILS.

PRODUCT REVISED as complying with the Florida Building Code
Acceptance No 11-1219.10
Expiration Date 12/20/16
By Ishaq L. Uhanda
Miami Bade Product Control

Jorge E. Valdes
Fla. PE# 67398
C.A.N. 28565

APR 22 2013

Miami Wall Systems, Inc.
701 West 25th Street
Hialeah, Florida. 33010
Phone:(305) 888-2300 Fax:(305) 888-3058

MEDIUM REINF. SGD SERIES 100 (SM)

DOOR DETAILS

NO.	DATE	REVISION
1	4/2/2013	UPDATE & ANCHOR SPEC'S
2	4/22/2013	PER BCCO COMMENTS

DATE: 12/2/2008
SCALE: AS NOTE
DWG. BY: A.A.G.
CHK. BY: JV
DWG NO.: 100-SM
SHEET 4 OF 9

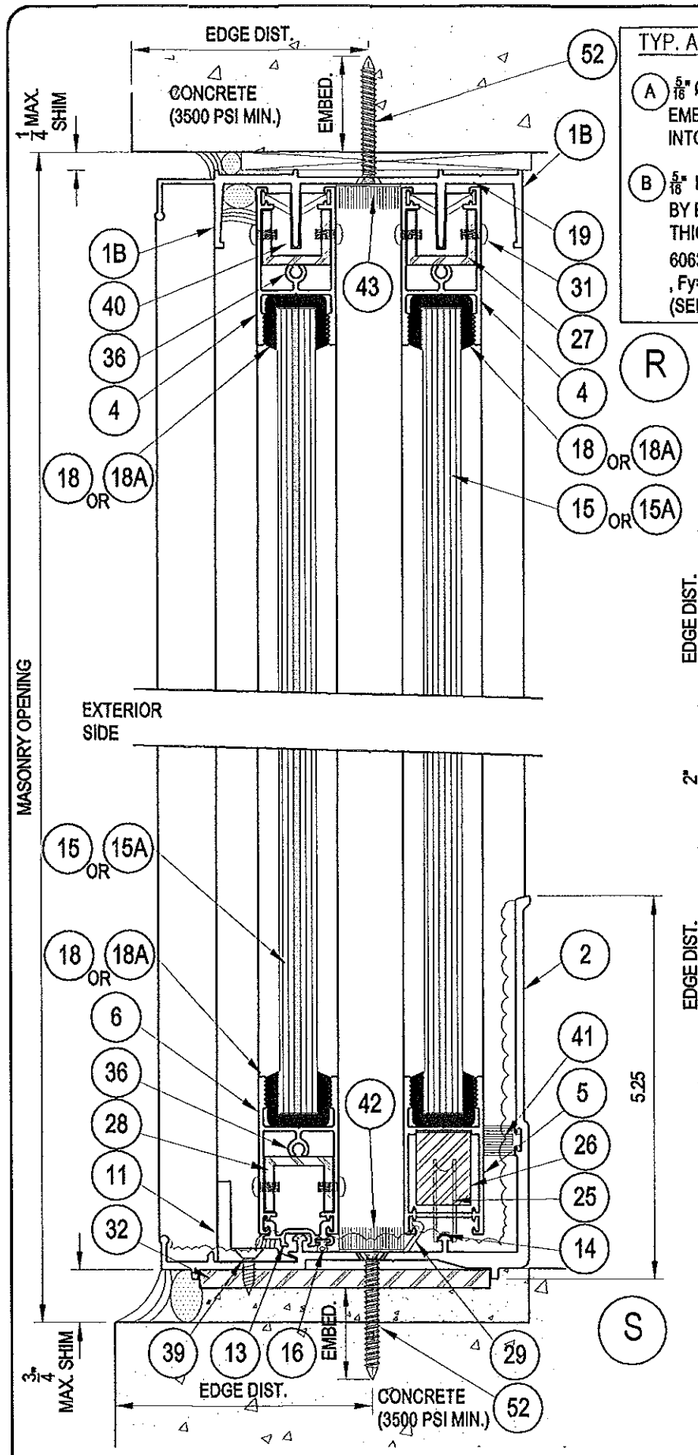

TYP. ANCHORS (SEE SHEET 1 FOR SPACING)

(A) 5/16" Ø FLAT HEAD ELCO TAPCON W/ 1 3/4" MIN. EMBED., 3 1/8" EDGE DIST. Fy=155 kpsi, Fu=177 kpsi INTO CONCRETE OR GROUT FILLED CONC. BLOCK.

(B) 5/16" KWIK FLEX SCREW BY HILTI OR DRILL - FLEX BY ELCO INTO METAL STRUCTURES WITH 1/8" MIN. THICKNESS (A36 STEEL OR ALUM. ALLOY 6063-T5 MIN.) & 1 1/2" MIN. EDGE DIST. , Fy=92 kpsi, Fu=120 kpsi (SEE DETAIL ON SHEET 8)

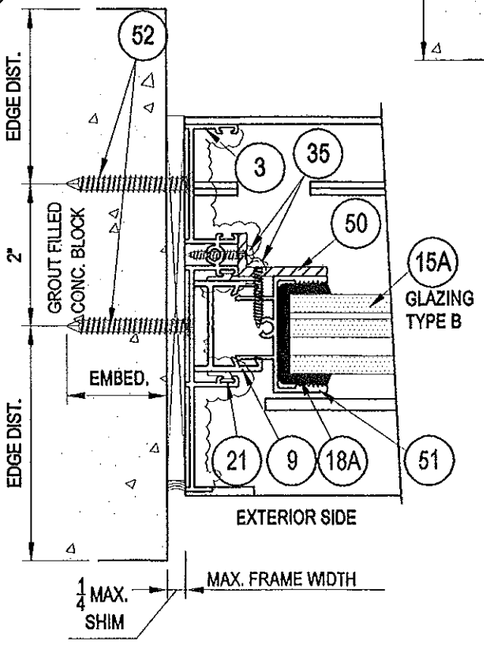

TYP. DETAIL USING ANGLE RETAINER CLIP FOR INSULATED LAMINATED GLASS

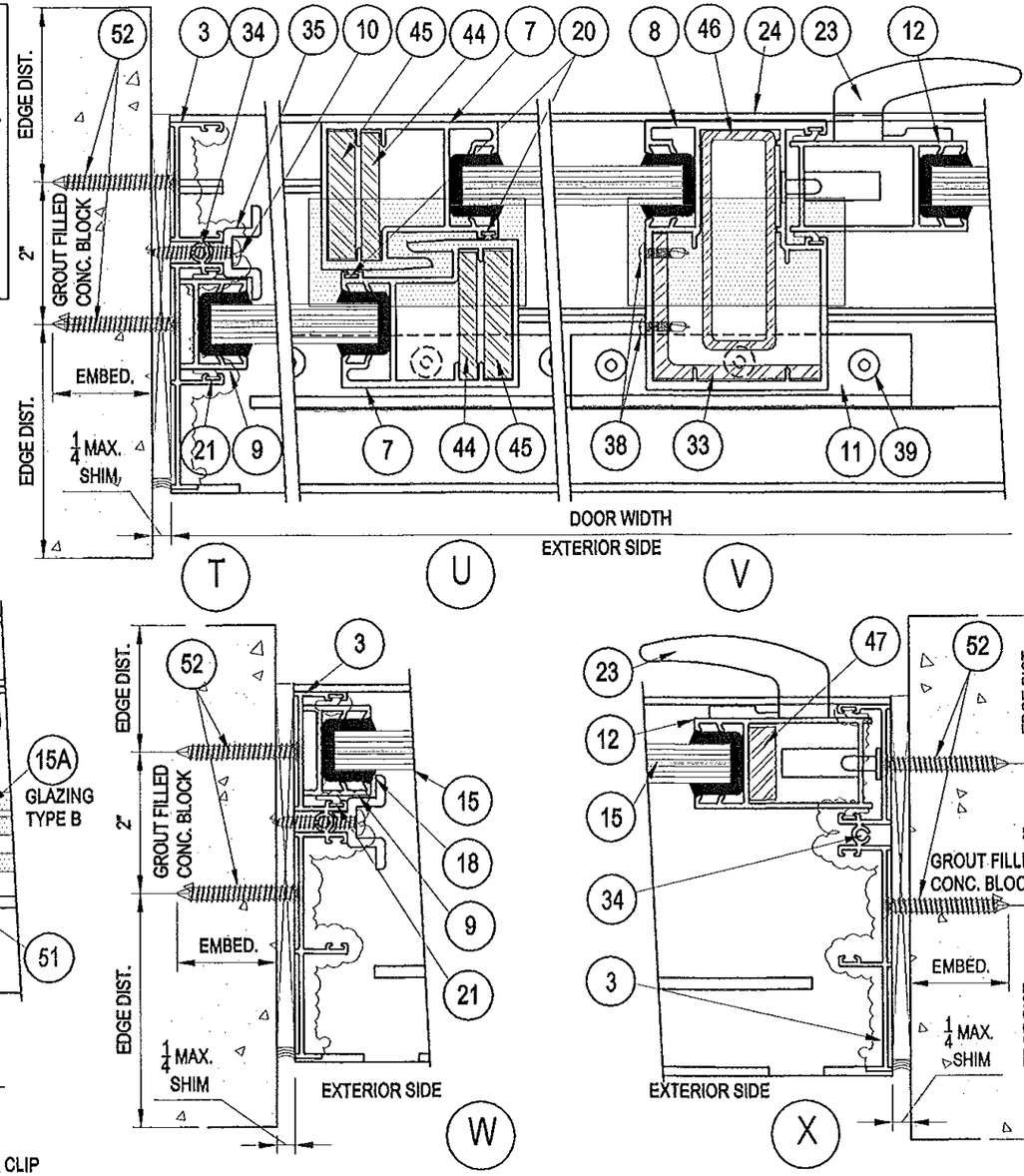

FIXED STILE DETAIL @ OXO CONFIGURATION

LOCK STILE DETAIL @ OX CONFIGURATION

(W) ALT

HEAVY REINFORCEMENT DOOR DETAILS.

NOTE: CROSS SECTION ARE SHOWN WITH GLAZING TYPE A. APLICABLE TO GLAZING TYPE B (INSULATED LAMINATED GLASS) SEE SHEET 1 AND SHEET 6 FOR APLICABLE SIZES AND DESIGN PRESURE.

PRODUCT REVISED as complying with the Florida Building Code
Acceptance No 11-1219.10
Expiration Date 12/20/16
By Isher L. Chavez
Miami Dade/Product Control

Jorge E. Valdes
Fla. PE# 67398
C.A.N. 28565

APR 22 2013

Miami Wall Systems, Inc.
701 West 25th Street
Hialeah, Florida. 33010
Phone:(305) 888-2300 Fax:(305) 888-3058

HEAVY REINF. SGD SERIES 100 (SM.)

DOOR DETAILS

NO.	DATE	REVISION
1	4/2/2013	UPDATE & ANCHOR SPEC'S
2	4/22/2013	PER BCCO COMMENTS

DATE: 12/2/2008
SCALE: AS NOTE
DWG. BY: A.A.G.
CHK. BY: JV
DWG NO.: 100-SM
SHEET 5 OF 9

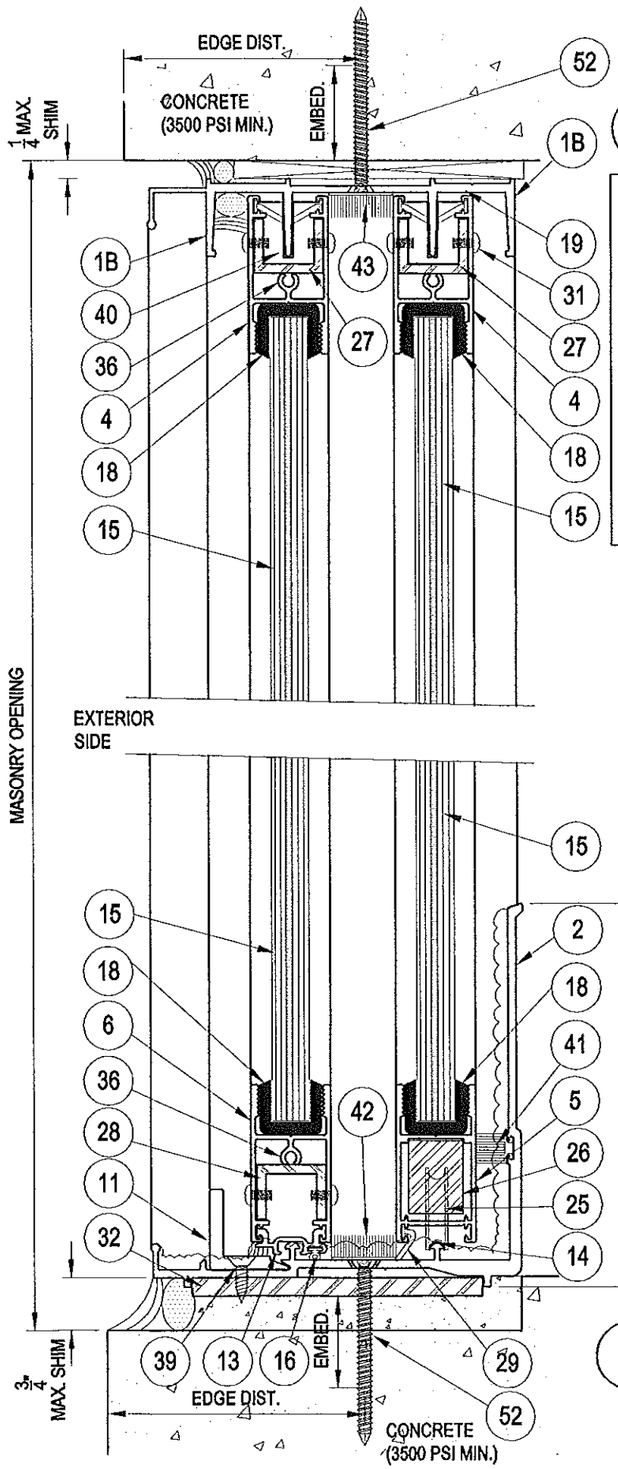

52 TYPICAL ANCHORS

(A) 5/16" Ø FLAT HEAD ELCO TAPCON W/ 1 3/4" MIN. EMBED., 3 1/8" EDGE DIST. Fy=155 kpsi, Fu=177 kpsi INTO CONCRETE OR GROUT FILLED CONC. BLOCK.

(B) 5/16" KWIK FLEX SCREW BY HILTI OR DRILL - FLEX BY ELCO INTO METAL STRUCTURES WITH 1/8" MIN. THICKNESS (A36 STEEL OR ALUM. ALLOY 6063-T5 MIN.) & 1 1/2" MIN. EDGE DIST. , Fy=92 kpsi, Fu=120 kpsi (SEE DETAIL ON SHEET 8)

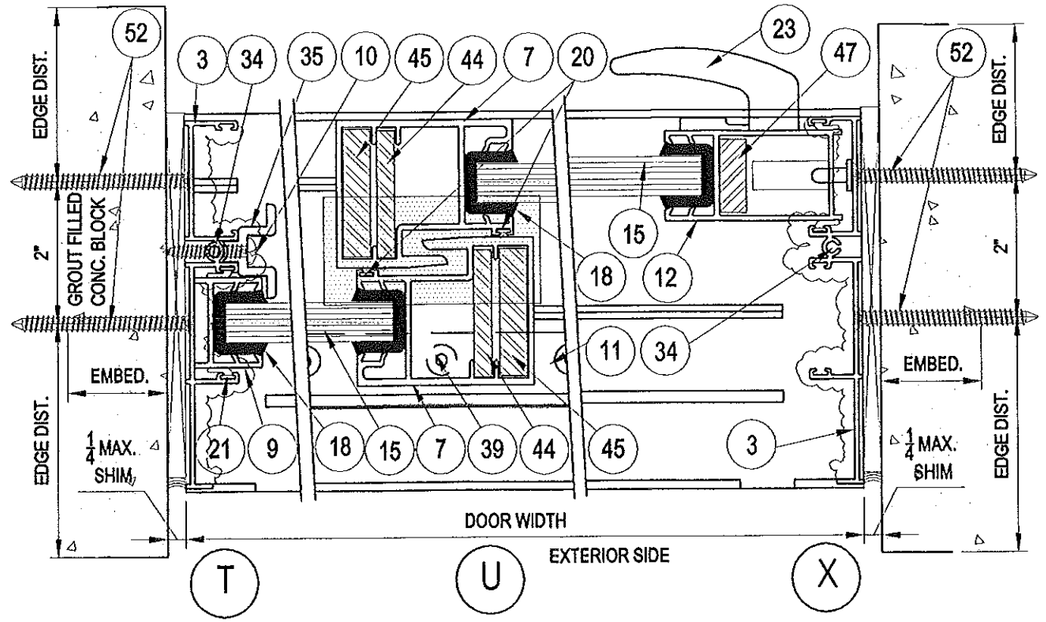

* PANEL WIDTH	FRAME HEIGHT W/O HEAD RECEPTOR	OX & OX ONLY	
		GLAZING TYPE "C"	
		HEAVY REINFORCEMENT	
		POSITIVE	NEGATIVE
32	96	+ 110.0	- 130.0
36		+ 110.0	- 130.0
40		+ 110.0	- 130.0
44		+ 110.0	- 130.0
48		+ 110.0	- 130.0
32	107	+ 110.0	- 130.0
36		+ 110.0	- 130.0
40		+ 110.0	- 130.0
44		+ 110.0	- 130.0
48		+ 110.0	- 130.0
32	108	+ 110.0	- 130.0
36		+ 110.0	- 130.0
40		+ 110.0	- 130.0
44		+ 110.0	- 130.0
48		+ 110.0	- 130.0

*: PANEL WIDTH = FRAME DOOR WIDTH / No OF PANELS

PANEL HEIGHT = FRAME HEIGHT - 2 3/4" (W/O H.R.)

W/O = WITHOUT

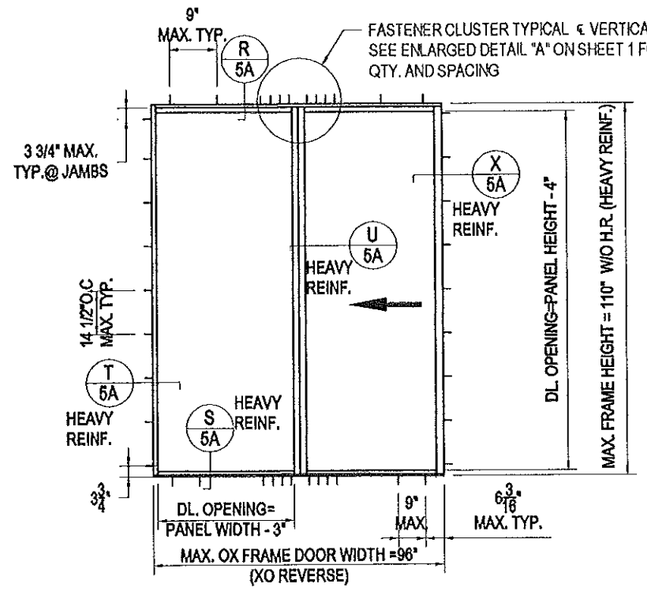

PRODUCT REVISED
as complying with the Florida Building Code
Acceptance No. 11-1219.10
Expiration Date 12/20/16
By Ishaq I. Chanda
Miami Dade Product Control

Jorge E. Valdes
Fla. PE# 67398
C.A.N. 28565

APR 2 2 2013

Miami Wall Systems, Inc.
701 West 25th Street
Hialeah, Florida. 33010
Phone:(305) 888-2300 Fax:(305) 888-3058

SGD SERIES 100 (SM.)

DOOR ELEVATIONS
GENERAL NOTES

NO.	DATE	REVISION
1	4/2/2013	UPDATE & NEW GLAZING OPTION
2	4/22/2013	PER BCCO COMMENTS

DATE: 12/2/2008
SCALE: AS NOTED
DWG. BY: A.A.G.
CHK. BY: JV
DWG NO.: 100-SM
SHEET 5A OF 9

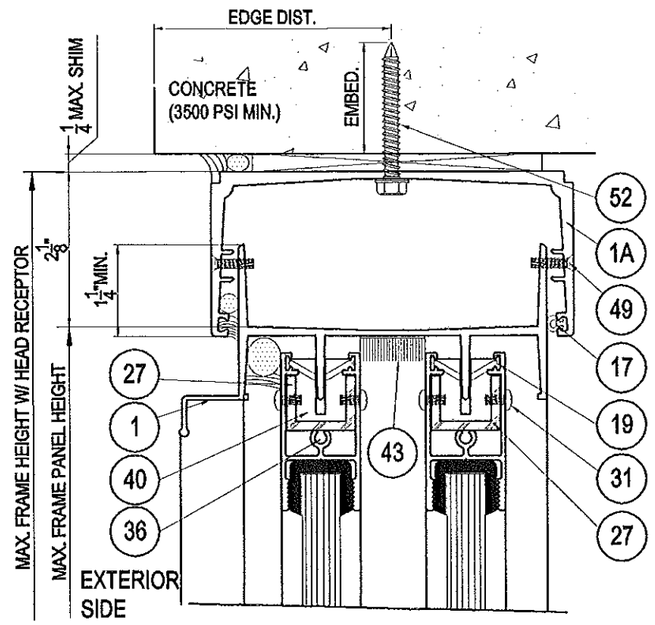

OPTION W/ HEAD RECEPTOR

APPLICABLE TO DOORS WITH MAX. PANEL DIMENSIONS OF 48"X107". SEE LOAD CHART FOR DETAILS.

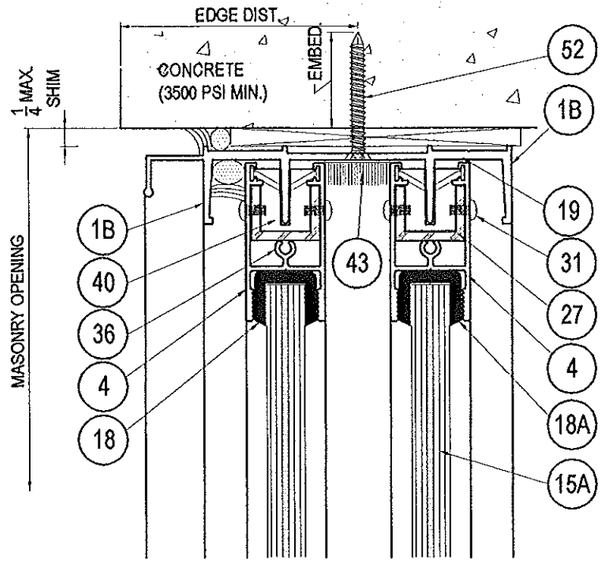

OPTION W/O HEAD RECEPTOR

* PANEL WIDTH	FRAME HEIGHT W/O HEAD RECEPTOR		DESIGN PRESSURE RATES (p.s.f.) OX, XO, OXO AND OXXO									
			GLAZING TYPE "A"								GLAZING TYPE "B"	
			NON-REINFORCEMENT		LIGHT REINFORCEMENT		MEDIUM REINFORCEMENT		HEAVY REINFORCEMENT		HEAVY REINFORCEMENT	
			POSITIVE	NEGATIVE	POSITIVE	NEGATIVE	POSITIVE	NEGATIVE	POSITIVE	NEGATIVE	POSITIVE	NEGATIVE
32	MAX FRAME HEIGHT W/ HEAD RECEPTOR = 109 1/8	96	+ 63.5	- 63.5	+ 73.5	- 73.5	+ 85.0	- 85.0	+ 115.0	- 115.0	+ 115.0	- 115.0
36			+ 63.5	- 63.5	+ 73.5	- 73.5	+ 85.0	- 85.0	+ 115.0	- 115.0	+ 115.0	- 115.0
40			+ 63.5	- 63.5	+ 73.5	- 73.5	+ 85.0	- 85.0	+ 115.0	- 115.0	+ 115.0	- 115.0
44			+ 63.5	- 63.5	+ 73.5	- 73.5	+ 85.0	- 85.0	+ 115.0	- 115.0	+ 115.0	- 115.0
48			+ 63.5	- 63.5	+ 73.5	- 73.5	+ 85.0	- 85.0	+ 115.0	- 115.0	+ 115.0	- 115.0
51			-	-	+ 73.5	- 73.5	+ 85.0	- 85.0	+ 115.0	- 115.0	+ 115.0	- 115.0
32		107	+ 63.5	- 63.5	+ 73.5	- 73.5	+ 85.0	- 85.0	+ 115.0	- 115.0	+ 115.0	- 115.0
36			+ 63.5	- 63.5	+ 73.5	- 73.5	+ 85.0	- 85.0	+ 115.0	- 115.0	+ 115.0	- 115.0
40			+ 63.5	- 63.5	+ 73.5	- 73.5	+ 85.0	- 85.0	+ 115.0	- 115.0	+ 115.0	- 115.0
44			+ 63.5	- 63.5	+ 73.5	- 73.5	+ 85.0	- 85.0	+ 115.0	- 115.0	+ 115.0	- 115.0
48			+ 63.5	- 63.5	+ 73.5	- 73.5	+ 85.0	- 85.0	+ 115.0	- 115.0	+ 115.0	- 115.0
51			-	-	-	-	-	-	+ 113.0	- 113.0	-	-
32		108	+ 63.5	- 63.5	+ 73.5	- 73.5	+ 85.0	- 85.0	+ 115.0	- 115.0	+ 115.0	- 115.0
36			+ 63.5	- 63.5	+ 73.5	- 73.5	+ 85.0	- 85.0	+ 115.0	- 115.0	+ 115.0	- 115.0
40			+ 63.5	- 63.5	+ 73.5	- 73.5	+ 85.0	- 85.0	+ 115.0	- 115.0	+ 115.0	- 115.0
44			+ 63.5	- 63.5	+ 73.5	- 73.5	+ 85.0	- 85.0	+ 115.0	- 115.0	+ 115.0	- 115.0
48			+ 63.5	- 63.5	+ 73.5	- 73.5	+ 85.0	- 85.0	+ 115.0	- 115.0	+ 115.0	- 115.0
51			-	-	-	-	-	-	+ 105.8	- 105.8	-	-
32		110	+ 63.5	- 63.5	+ 73.5	- 73.5	-	-	+ 115.0	- 115.0	+ 115.0	- 115.0
36			+ 63.5	- 63.5	+ 73.5	- 73.5	-	-	+ 115.0	- 115.0	+ 115.0	- 115.0
40			+ 63.5	- 63.5	+ 73.5	- 73.5	-	-	+ 115.0	- 115.0	+ 115.0	- 115.0
44			+ 63.5	- 63.5	+ 73.5	- 73.5	-	-	+ 90.0	- 90.0	+ 115.0	- 115.0
48			+ 63.5	- 63.5	+ 73.5	- 73.5	-	-	+ 90.0	- 90.0	+ 115.0	- 115.0
51			-	-	-	-	-	-	+ 90.0	- 90.0	-	-
32		116	-	-	-	-	-	-	+ 115.0	- 115.0	-	-
36			-	-	-	-	-	-	+ 90.0	- 90.0	-	-
40			-	-	-	-	-	-	+ 90.0	- 90.0	-	-
44			-	-	-	-	-	-	+ 90.0	- 90.0	-	-
51			-	-	-	-	-	-	+ 90.0	- 90.0	-	-
32		123	-	-	-	-	-	-	+ 90.0	- 90.0	-	-
36			-	-	-	-	-	-	+ 90.0	- 90.0	-	-
40			-	-	-	-	-	-	+ 90.0	- 90.0	-	-
44			-	-	-	-	-	-	+ 90.0	- 90.0	-	-
51			-	-	-	-	-	-	+ 90.0	- 90.0	-	-

*: PANEL WIDTH = FRAME DOOR WIDTH / No OF PANELS

PANEL HEIGHT = FRAME HEIGHT - 2 3/4" (W/O H.R.)
= FRAME HEIGHT - 1" (W/ H.R.)
W = WITH
W/O = WITHOUT

NOTE: SEE SHEET 2, 3, 4 & 5 FOR REINFORCEMENT DETAILS.

PRODUCT REVISED
as complying with the Florida Building Code
Acceptance No. 11-1219.10
Expiration Date 12/26/16
By Miami Dade Product Control

Jorge E. Valdes
Fla. PE# 67398
C.A.N. 28565

APR 2 2 2013

Miami Wall Systems, Inc.
701 West 25th Street
Hialeah, Florida. 33010
Phone:(305) 888-2300 Fax:(305) 888-3058

SGD SERIES 100 (SM.)

HEAD RECEPTOR, DETAIL & PRESSURE CHART

NO.	DATE	REVISION
1	4/2/2013	UPDATE & NEW GLAZING OPTION
2	4/22/2013	PER BCCO COMMENTS

DATE: 12/2/2008
SCALE: AS NOTE
DWG. BY: A.A.G.
CHK. BY: JV
DWG NO.: 100-SM
SHEET 6 OF 9

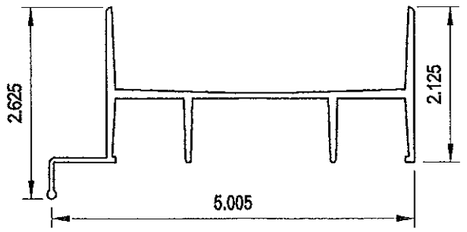

1 HEAD TRACK (USED W/ ITEM 1A)
TYP. WALL THK = 0.080" - 0.125"
MAT: ALUM. ALOY 6063-T5
SEE SHEET 5 FOR LIMITATIONS

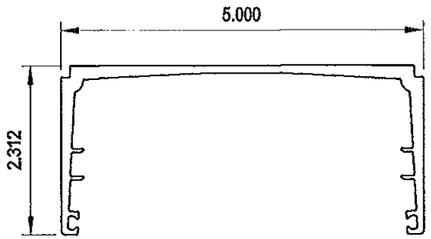

1A HEAD RECEPTOR
TYP. WALL THK = 0.100" - 0.188"
MAT: ALUM. ALOY 6063-T5
SEE SHEET 5 FOR LIMITATIONS

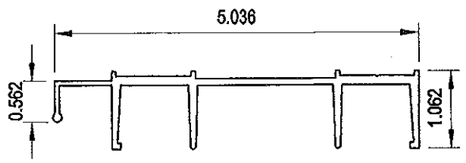

1B FRAME HEAD
TYP. WALL THK = 0.100" - 0.188"
MAT: ALUM. ALOY 6105 -T5

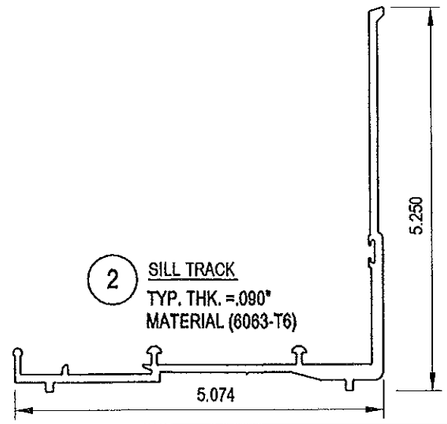

2 SILL TRACK
TYP. THK. =.090"
MATERIAL (6063-T6)

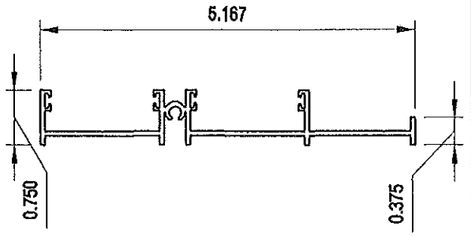

3 FRAME JAMB
TYP. WALL THK = 0.062"
MAT: ALUM. ALOY 6063-T6

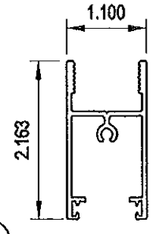

4 TOP RAIL

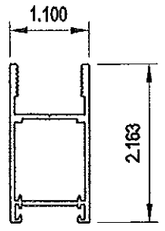

5 MOVING BOTTOM RAIL
TYP. WALL THK = 0.062"
MAT: ALUM. ALOY 6063-T6

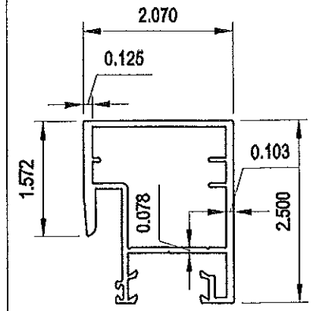

7 INTERLOCK STILE
TYP. WALL THK = 0.078"
MAT: ALUM. ALOY 6063-T6

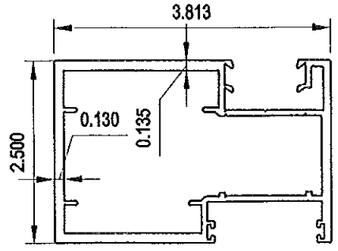

8 FEMALE ASTRAGAL
TYP. WALL THK = 0.078"
MAT: ALUM. ALOY 6063-T6

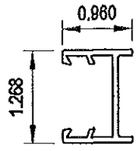

9 FIXED JAMB STILE
TYP. WALL THK = 0.075"
MAT: ALUM. ALOY 6063-T6

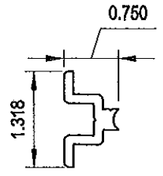

10 RETAINER CLIP
TYP. WALL THK = 0.125"
MAT: ALUM. ALOY 6063-T6

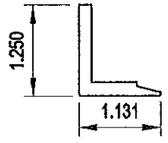

11 TRACK CLIP
TYP. WALL THK = 0.062"
MAT: ALUM. ALOY 6063-T6

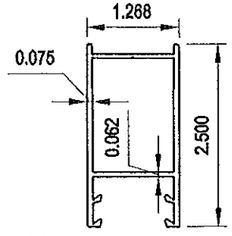

12 LOCK STILE
TYP. WALL THK = 0.075"
MAT: ALUM. ALOY 6063-T6

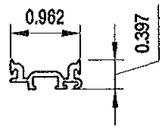

13 TRACK ADAPTOR
TYP. WALL THK = 0.062"
MAT: ALUM. ALOY 6063-T5

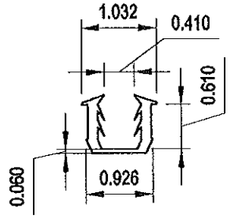

18 GASKET
DUROMETER (SHORE A)=70
TENSILE STRENGTH = 1545 psi
ELONGATION = 351 %
S.G. = 1.42

PRODUCT REVISED
as complying with the Florida
Building Code
Acceptance No. 11-1219.10
Expiration Date: 12.20.16
By
Miami Dade Product Control

Jorge E. Valdes
Fla. PE# 67398
C.A.N. 28565

APR 2 2 2013

Miami Wall Systems, Inc.
701 West 25th Street
Hialeah, Florida. 33010
Phone:(305) 888-2300 Fax:(305) 888-3058

SGD SERIES 100

EXTRUSION DETAILS

NO.	DATE	REVISION
1	4/2/2013	NO CHANGE THIS SHEET
2	4/22/2013	PER BCCO COMMENTS

DATE: 12/2/2008
SCALE: AS NOTED
DWG. BY: A.A.G.
CHK. BY: JV
DWG NO.: 100-SM
SHEET 7 OF 9

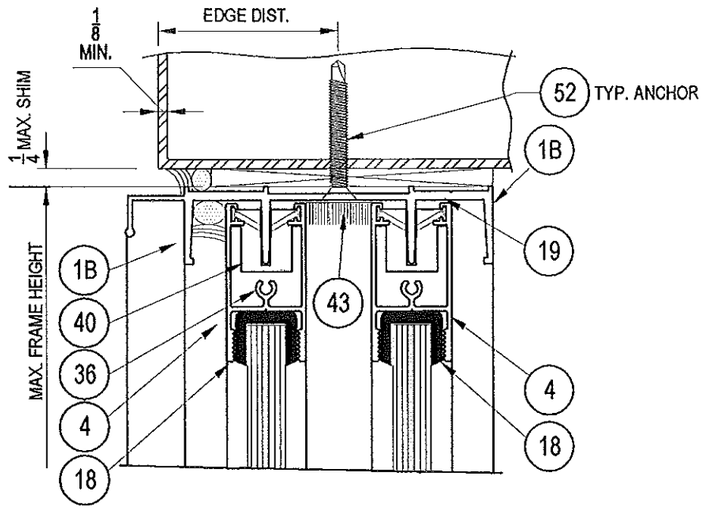

TYP. HEAD ANCHORAGE DETAIL
INTO METAL STRUCTURE
(STEEL A36 WITH Fy= 36 ksi. OR ALUM. ALLOY 6063-T5)

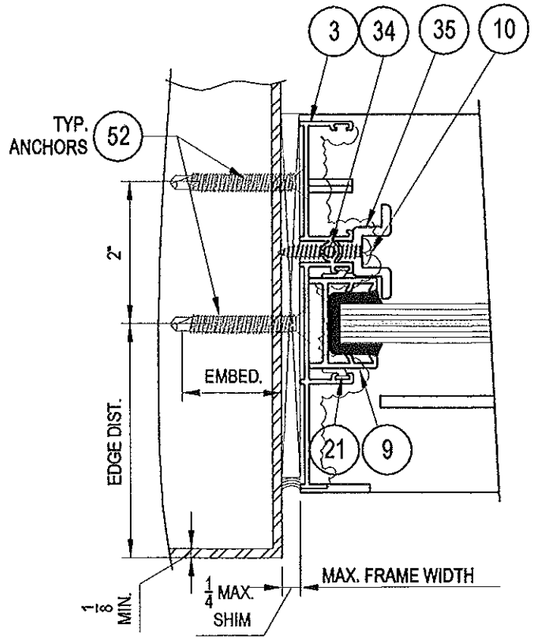

TYP. JAMB ANCHORAGE DETAIL
INTO METAL STRUCTURE
(STEEL A36 WITH Fy= 36 ksi. OR ALUM. ALLOY 6063-T5)

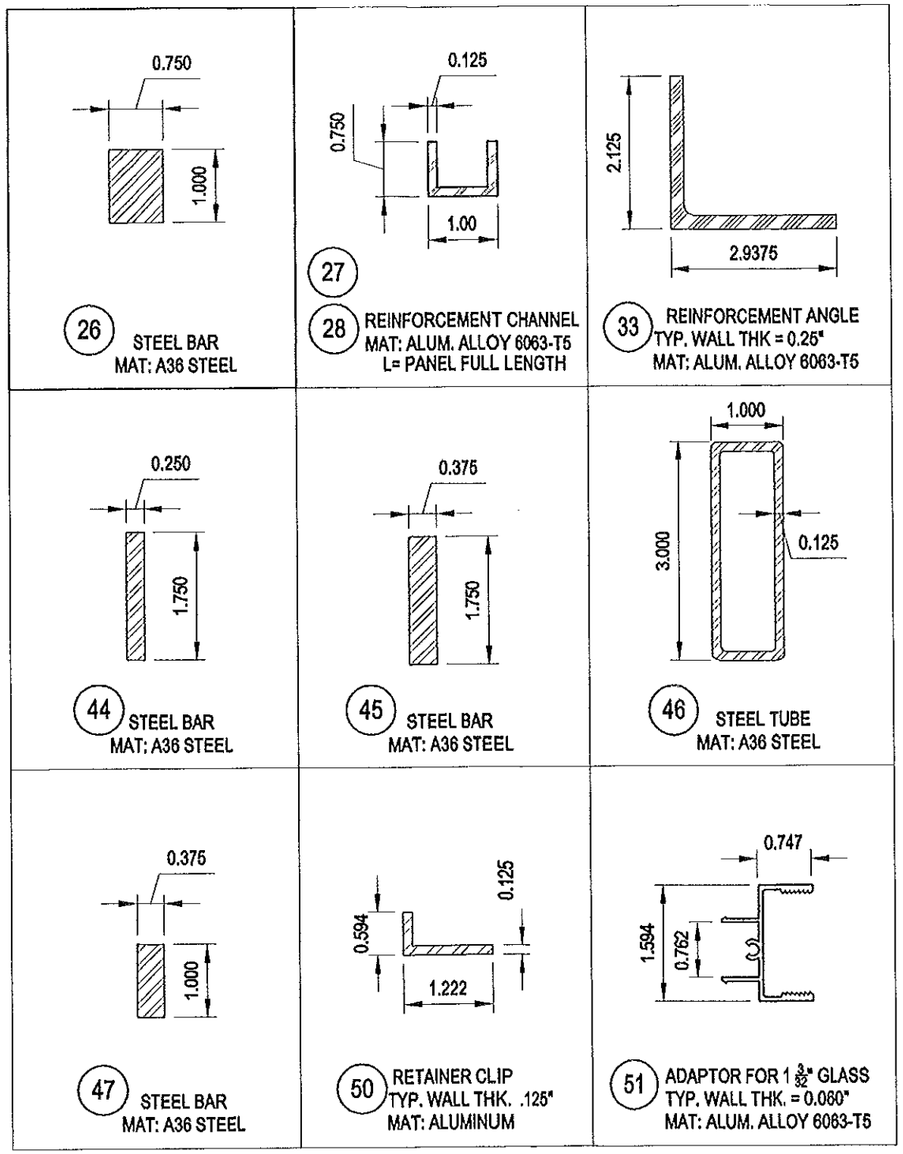

PRODUCT REVISED
as complying with the Florida
Building Code
Acceptance No 11-1219.16
Expiration Date 12/20/16
By Ishaq I. Chande
Miami Dade Product Control

Jorge E. Valdes
Fla. PE# 67398
C.A.N. 28565

APR 22 2013

Miami Wall Systems, Inc.
701 West 25th Street
Hialeah, Florida. 33010
Phone:(305) 888-2300 Fax:(305) 888-3058

SGD SERIES 100 (SM.)

EXTRUSION & DETAILS

NO.	DATE	REVISION
1	4/2/2013	NO CHANGE THIS SHEET
2	4/22/2013	PER BCCO COMMENTS

DATE: 12/2/2008
SCALE: AS NOTE
DWG. BY: A.A.G.
CHK. BY: JV
DWG NO.: 100-SM
SHEET 8 OF 9

BILL OF MATERIALS

ITEM No.	PART No.	REQ'D	PART NAME	REMARKS
1	100-021	1	HEAD TRACK FOR SCREEN & RECEPTOR	
1A	100-010	1	HEAD RECEPTOR	
1B	100-018	1	FRAME HEAD	
2	100-045	1	SILL TRACK	
3	100-019	2	FRAME JAMB	
4	100-033	1 PER PANEL	TOP RAIL	
5	100-032	1 PER MOV. PANEL	MOVING BOTTOM RAIL	
6	100-033	1 PER FIXED PANEL	FIXED BOTTOM RAIL	
7	100-029	2 PER INTER-LOCK	INTERLOCK STILE	
8	100-031	1	FEMALE ASTRAGAL	
9	100-034	1 PER FIXED PANEL	FIXED JAMB STILE	
10	100-020	3 PER FIXED PANEL	FIXED STILE RETAINER CLIP	(2) @ 3½" FROM ENDS & (1) @ MIDSPAN OF EACH FIXED STILE
11	100-028	1 PER INTERLOCK/ASTRAGAL	TRACK CLIP	AT ASTRAGAL AND INTERLOCKS
12	100-030	1	LOCK STILE	
13	100-003	1 PER FIXED PANEL	TRACK ADAPTER	FIXED BOTTOM RAILS
14		2	JOHNSON BROS. S/S TRACK CAP	FRAME SILL
15		1 PER PANEL	9/16" LAMINATED GLASS	SEE SHEET 1 FOR GLAZING DETAIL
15A		1 PER PANEL	INSULATED LAMINATED GLASS	SEE SHEET 1 FOR GLAZING DETAIL
16	G-119A	AS REQ'D	PROTOTYPE, PLS VINYL FLAP	AT FXD. BOTTOM RAILS, SINGLE ROW
17	G-117	AS REQ'D	PROTOTYPE VINYL FLAP	AT INTERIOR SIDE OF HEAD RECEPTOR
18	GASKET	AS REQ'D	G-132 PROTOTYPE GLAZING VYNIL (O'TECH CORP)	GLAZING GASKET
18A	SILICONE	AS REQ'D	TREMCO SPECTRUM 2	WET GLAZED (SEE SHEET 1 FOR GLAZING DETAIL)
19	G-127	AS REQ'D	DS. BROWN VINYL FLAP	AT TOP RAILS, DOUBLE ROW
20	G-115A	AS REQ'D	PROTOTYPE, PLS VINYL FLAP	AT INTERLOCKS, SINGLE ROW
21	G-115A	AS REQ'D	PROTOTYPE, VINYL FLAP	AT JAMBS & ASTRAGAL, DOUBLE ROW
22		2 PER MOV. PANEL	#10 x ¾" P.H., S.M.S., S/S	AT MOV. BOTTOM RAILS. (2) EACH
23	683-537	1 PER LOCK STILE	3 - PLY S.S. MATISE LOCK + ALUM HANDLE	(1) PER LOCKSTILE
24	2536-10S/S	1 PER LOCK STILE	STAINLESS STEEL KEEPER	AT FEMALE ASTRAGAL STILE / FRAME JAMB
25	3793	2 PER MOV. PANEL	DELMAR TANDEM WHEELS	AT MOV BOTTOM RAILS. (2) EACH
26		1 PER MOV. PANEL	¾" x 1" STEEL BAR	AT MOVING BOTTOM RAILS (REINFORCED UNITS ONLY)
27	100-040	1 PER PANEL	ALUM. CHANNEL ¾"X1"X¾"X⅛"X47"	AT TOP RAILS, PANELS (REINFORCED UNITS ONLY)
28	100-040	1 PER FIXED PANEL	ALUM. CHANNEL ¾"X1"X¾"X⅛"X47"	AT FXD. BOTTOM RAILS, PANELS (REINFORCED UNITS ONLY)
29	G-123	1 PER MOV. PANEL	PROTOTYPE, VINYL FLAP	AT MOV. BOTTOM RAILS. (1) EACH
30		1 PER INTER-LOCK	1.844 x ¼" x 4" ALUM. BAR	AT TOP ENDS OF INTERLOCK STILES
31		6 PER ITEM 27 & 28	#10 x ⅜" P.H., S.M.S., S/S	TOP RAILS & FXD BOTTOM RAILS.
32		1 PER ITEM 11	¼" x 4" x 6½" ALUM. PLATE	(1) PER SILL TRACK CLIP.
33	100-046	1 PER ASTRAGAL	2 5/16" x 2⅛" x 4" x ⅜" THK. ALUM. ANGLE	AT BOTTOM OF FEMALE ASTRAGAL (REINFORCED UNITS ONLY)
34		4	#10 x 1" PAN HD., S.M.S., S/S	FRAME CORNERS (ASSY. SCREWS)
35		1 PER ITEM 10	#10 x 1" PAN HD., S.M.S., S/S	ITEM # 10 WITH FRAME JAMB.
36		2 PER PANEL	#10 x 1" PAN HD., S.M.S., S/S ASSY. SCREWS	AT TOP AND BOTTOM OF PANELS
37		2 PER LOCK STILE	#10 x ½" PAN HD., S.M.S., S/S	AT TOP AND BOTTOM OF LOCKSTILE
38		4 PER ASTRAGAL	¼"-20 x ¾" PAN HD., M.S., S/S	AT TOP AND BOTTOM OF ASTRAGAL (REINFORCED UNITS ONLY)
39		3 PER ITEM 11	¼"-20 x ⅜" FLAT HD., M.S., S/S	ITEM # 11 WITH FRAME SILL
40	#100-5	2 PER PANEL	M&M, PLASTIC GUIDE	AT TOP VERTICAL STILES
41		1	0.50" x 1.89" x 2" PILE PAD	AT UPTURN LEG OF FRAME SILL WHERE LOCKSTILE OCCURS
42		1 PER INTERLOCK/ASTRAGAL	0.63" x 1.88" x 2.43" PILE PAD	AT FRAME SILL.
43		1 PER INTERLOCK/ASTRAGAL	0.36" x 1.88" x 2.43" PILE PAD	AT FRAME HEAD.
44		1 PER INTERLOCK.	REINFORCEMENT STEEL BAR	LENGTH=PANEL HEIGHT - 5"
45		1 PER INTERLOCK.	REINFORCEMENT STEEL BAR	LENGTH=PANEL HEIGHT - 5"
46		1 PER ASTRAGAL.	REINFORCEMENT STL.TUBE	LENGTH=PANEL HEIGHT - 5"
47		1 PER LOCK STILE.	REINFORCEMENT STEEL BAR	LENGTH=PANEL HEIGHT - 5"
48		AS REQ'D	GREAT STUFF, EXP.FOAM	AT TOP & BOTTOM OF ASTRAGAL
49		2 PER INTERLOCK/ASTRAGAL	#14 x1" FLAT HD., S.M.S., S/S	AT HEAD RECEPTOR, INTERLOCKS/ASTR.
50		3 PER FIXED PANEL	ANGLE RETAINER CLIP	(1) AT MIDSPAN AND BALANCE 6" FROM ENDS
51		4 PER PANEL	ADAPTOR FOR 1 3/32" INSULATED LAMINATED GLASS	AT EACH PANEL RAIL
52		AS REQ'D	TYP. ANCHORS	SEE SHEETS 2, 3, 4, 5 & 5A

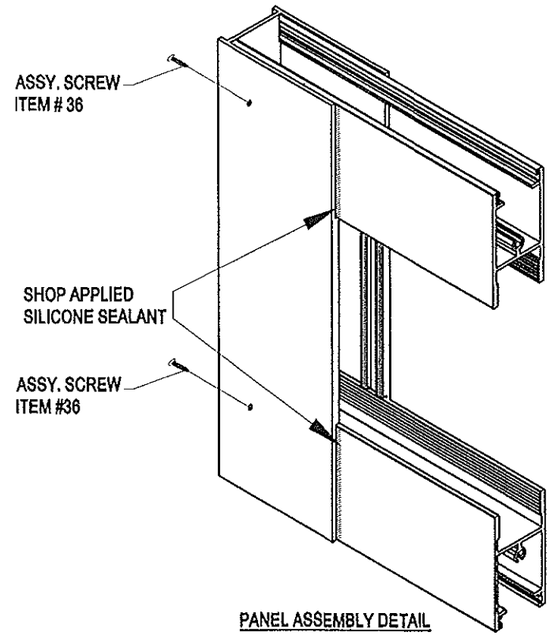

PANEL ASSEMBLY DETAIL

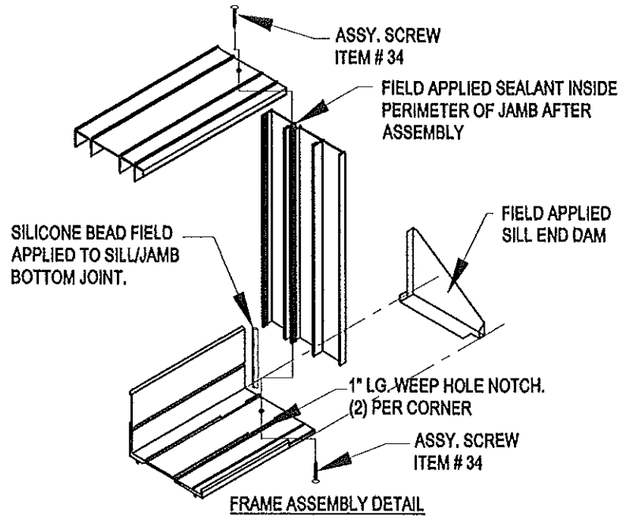

FRAME ASSEMBLY DETAIL

PRODUCT REVISED
as complying with the Florida
Building Code
Acceptance No. 11-1219.10
Expiration Date DEC 29, 2016
By Joshua L. Chandler
Miami Dade Product Control

Jorge E. Valdes
Fla. PE# 67398
C.A.N. 28565

APR 2 2 2013

Miami Wall Systems, Inc.
701 West 25th Street
Hialeah, Florida. 33010
Phone:(305) 888-2300 Fax:(305) 888-3058

SGD SERIES 100 (SM.)

ASSEMBLY DETAILS & BILL OF MATERIALS

NO.	DATE	REVISION
1	4/2/2013	NO CHANGE THIS SHEET
2	4/22/2013	PER BCCO COMMENTS

DATE: 12/2/2008
SCALE: AS NOTED
DWG. BY: A.A.G.
CHK. BY: JV
DWG NO.: 100-SM
SHEET 9 OF 9