MIAMI-DADE COUNTY
DEPARTMENT OF PERMITTING, ENVIRONMENT, AND REGULATORY AFFAIRS (PERA)
BOARD AND CODE ADMINISTRATION DIVISION

MIAMI-DADE COUNTY
PRODUCT CONTROL SECTION
11805 SW 26 Street, Room 208
Miami, Florida 33175-2474
T (786) 315-2590 F (786) 315-2599
www.miamidade.gov/pera/

# NOTICE OF ACCEPTANCE (NOA)

**SMI Aluminum System, LLC**
**11305 NW 128th Street**
**Medley, FL 33178**

**SCOPE:**

This NOA is being issued under the applicable rules and regulations governing the use of construction materials. The documentation submitted has been reviewed and accepted by Miami-Dade County PERA -Product Control Section to be used in Miami Dade County and other areas where allowed by the Authority Having Jurisdiction (AHJ).
This NOA shall not be valid after the expiration date stated below. The Miami-Dade County Product Control Section (In Miami Dade County) and/or the AHJ (in areas other than Miami Dade County) reserve the right to have this product or material tested for quality assurance purposes. If this product or material fails to perform in the accepted manner, the manufacturer will incur the expense of such testing and the AHJ may immediately revoke, modify, or suspend the use of such product or material within their jurisdiction. PERA reserves the right to revoke this acceptance, if it is determined by Miami-Dade County Product Control Section that this product or material fails to meet the requirements of the applicable building code.
This product is approved as described herein, and has been designed to comply with the Florida Building Code, including the High Velocity Hurricane Zone.

**DESCRIPTION: Series MK-2 Aluminum Entrance Door w/wo Transom-L.M.I**

**APPROVAL DOCUMENT:** Drawing No. **W03-58 Rev G**, titled "Series MK-2 Alum Entrance Door (L.M.I)", sheets 1 through 9 of 9, inclusive 7.1, prepared by the AL-Farooq Corporation, dated 07/30/03 and last revised on April 26, 2012, signed and sealed by Javad Ahmad, P.E., bearing the Miami-Dade County Product Control Revision stamp with the Notice of Acceptance number and expiration date by the Miami-Dade County Product Control Section.

**MISSILE IMPACT RATING: Large and Small Missile Impact**

**Limitations:**

1. See Door Pressure (DP) capacity table in sheet 1 for X & XX doors and sheet 2 for O/X and O/XX doors w/ 24" max transom.
2. Lower design pressure shall control, when door or door w/ transom is mulled to storefront system, the vertical mullion end anchors to be specified per tributary load and to be reviewed by Bldg official.
3. Doors are not rated for water infiltration, unless covered by overhang or canopy complying w/ FBC.
4. Single & double doors must use closed tabular item **1A** (SMI-006) as header.

**LABELING:** Each unit shall bear a permanent label with the manufacturer's name or logo, city, state and series and following statement: "Miami-Dade County Product Control Approved", noted herein.

**RENEWAL** of this NOA shall be considered after a renewal application has been filed and there has been no change in the applicable building code negatively affecting the performance of this product.

**TERMINATION** of this NOA will occur after the expiration date or if there has been a revision or change in the materials, use, and/or manufacture of the product or process. Misuse of this NOA as an endorsement of any product, for sales, advertising or any other purposes shall automatically terminate this NOA. Failure to comply with any section of this NOA shall be cause for termination and removal of NOA.

**ADVERTISEMENT:** The NOA number preceded by the words Miami-Dade County, Florida, and followed by the expiration date may be displayed in advertising literature. If any portion of the NOA is displayed, then it shall be done in its entirety.

**INSPECTION:** A copy of this entire NOA shall be provided to the user by the manufacturer or its distributors and shall be available for inspection at the job site at the request of the Building Official.
This NOA **revises NOA # 08-1202.14** and consists of this page 1 and evidence pages E-1, as well as approval document mentioned above.
The submitted documentation was reviewed by **Ishaq I. Chanda, P.E.**

5/26/12 MIAMI-DADE COUNTY APPROVED

**SMI Aluminum System, LLC**

## NOTICE OF ACCEPTANCE: EVIDENCE SUBMITTED

**A. DRAWINGS**

1. Manufacturer's die drawings and sections (transferred from file **#08-1202.14**).
2. Drawing No. **W03-58 Rev G**, titled "Series MK-2 Alum Entrance Door (L.M.I)", sheets 1 through 9 of 9, inclusive 7.1, prepared by the AL-Farooq Corporation, dated 07/30/03 and last revised on April 26, 2012, signed and sealed by Javad Ahmad, P.E.

**B. TESTS** (transferred from file **#08-1202.14**)

1. Test reports on: 1) Air Infiltration Test, per FBC, TAS 202-94
   2) Uniform Static Air Pressure Test, Loading per FBC TAS 202-94
   3) Water Resistance Test, per FBC, TAS 202-94
   4) Forced Entry Test, per FBC 2411 3.2.1, TAS 202-94

   along with marked-up drawings and installation diagram of a aluminum outswinging O/XX & XXOO door system, prepared by Fenestration Testing Laboratory, Inc., Test Report No. **FTL-3603**, dated 11/05/02 and **FTL-3997,** dated 12/04/03, signed and sealed by Joseph Chan, P.E. and Edmundo Largaespada , P.E., respectively.
2. SMI Doors Reference test report No. FTL-6348 per TAS 201, 202 & 203.
3. SMI Window wall sys, Reference test report No. FTL-3833 per TAS 201/202 &203.

**C. CALCULATIONS**

1. Anchor verification calculations and structural analysis, complying with FBC 2010, prepared by Al Farooq Corporation, dated 06/01/11 and last revised on FEB 12, 2012, signed and sealed by Javad Ahmad, P.E.
2. Glazing complies w/ ASTME-1300-02 & -04

**D. QUALITY ASSURANCE**

1. Miami Dade Department of Permitting, Environment, and Regulatory Affairs (PERA).

**E. MATERIAL CERTIFICATIONS**

1. Notice of Acceptance No. **11-0325.05** issued to Solutia Inc. for their "**Saflex Clear or colored interlayer**", expiring on 05/21/16.
2. Notice of Acceptance No.**12-0130.01**, issued to Cytec Industries Inc. for "Uvekol S laminated glass interlayer", expiring on 02/08/2014.

**F. STATEMENTS**

1. Statement letter of conformance to FBC 2010 and letter of no financial interest, prepared by Al Farooq Corporation, dated 01/26/12, signed and sealed by Javad Ahmad, P.E.
2. Statement of Lab compliance, as part of the above referenced test reports.
3. Asset purchase agreement dated SEP 17, 2010 between Smith Mountain Acquisition Co.LLC (Buyer) and Pande Pande, LLC (Seller) signed by Leon Silverstein, Manager and Jim Pande, Manager respectively on behalf of the companies.
4. Statement letter dated DEC 06, 2011, issued by Pande Pande, LLC dba SMI System or Smith Mountain Impact System of sales of asset and relinquishing of all rights of NOA # 08-1202.04, signed by Jim Pande, President.
5. Statement letter dated NOV 11, 2011, issued by SMI Aluminum System of purchased of asset of SMI System dba Pande Pande, LLC, signed by Manny Valladares.

**G. OTHER**

1. This NOA **revises** NOA # **08-1202.14**, expiring on DEC 04, 2013.
2. Die drawings SMI current parts Vs NOA#08-1202.14 die parts drawings.
3. Test proposal # 03-0384 dated June 11, 2003 approved by BCCO.

Ishaq I. Chanda

**Ishaq I. Chanda, P.E.**
**Product Control Examiner**
**NOA No 11-1219.13**
**Expiration Date: December 04, 2013**

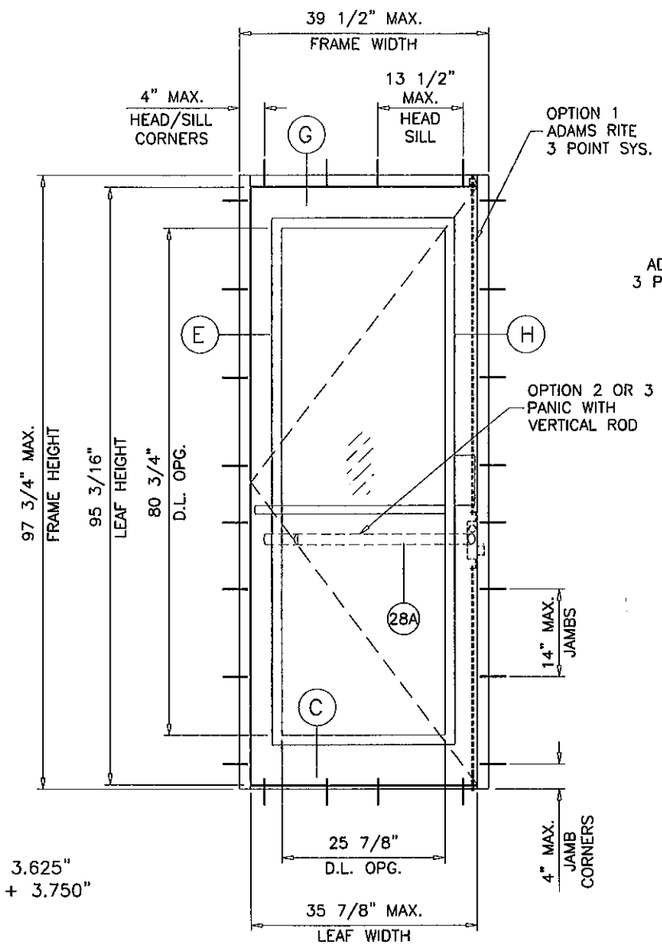


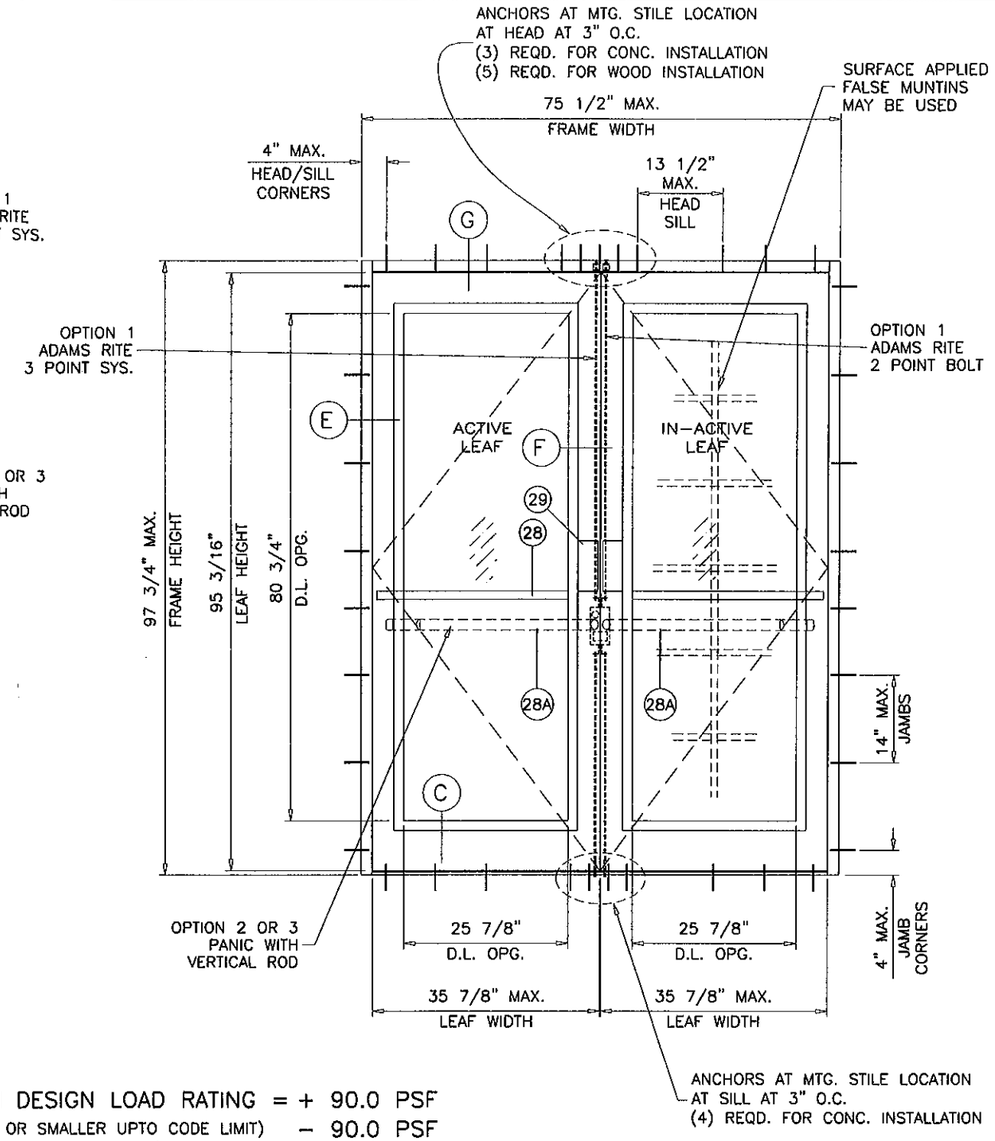


FRAME HEIGHT = LEAF HEIGHT + 2.563"
FRAME WIDTH (X DOORS) = SINGLE LEAF WIDTH + 3.625"
FRAME WIDTH (XX DOORS) = DOUBLE LEAF WIDTH + 3.750"
D.L.O. HEIGHT = LEAF HEIGHT − 14.438"
D.L.O. WIDTH = LEAF WIDTH − 10.000"

THESE DOORS ARE RATED FOR LARGE & SMALL MISSILE IMPACT.
SHUTTERS ARE NOT REQUIRED.

MAXIMUM DESIGN LOAD RATING = + 90.0 PSF
(FOR SIZES SHOWN ABOVE OR SMALLER UPTO CODE LIMIT) − 90.0 PSF
(GLASS TYPES A, B, C OR D)

## SERIES MK-2 ALUMINUM ENTRANCE DOOR

SEE THIS SHEET FOR DESIGN LOAD CAPACITY OF SINGLE (X) AND DOUBLE (XX) DOORS W/O TRANSOM.

SEE CHARTS ON SHEET 2 FOR DESIGN LOAD CAPACITY OF SINGLE (O/X) AND DOUBLE (O/XX) DOORS WITH TRANSOM.

DOORS CAN ALSO BE USED WITH SM-175 STOREFRONT SYSTEM. FOR DOORS WITH STOREFRONT SYSTEM SEE SEPARATE NOA FOR DOOR MULLION CAPACITY.

THE LOWEST VALUE RESULTING FROM DOOR CAPACITY CHARTS OR STOREFRONT NOA WILL APPLY TO ENTIRE SYSTEM.

DOORS NOT APPROVED FOR INSTALLATIONS WHERE WATER INFILTRATION RESISTANCE IS REQUIRED.

THIS PRODUCT HAS BEEN DESIGNED AND TESTED TO COMPLY WITH THE REQUIREMENTS OF THE FLORIDA BUILDING CODE INCLUDING HIGH VELOCITY HURRICANE ZONE (HVHZ).

1BY OR 2BY WOOD BUCKS BY OTHERS, MUST BE ANCHORED PROPERLY TO TRANSFER LOADS TO THE STRUCTURE.

ANCHORS SHALL BE AS LISTED, SPACED AS SHOWN ON DETAILS, ANCHORS EMBEDMENT TO BASE MATERIAL SHALL BE BEYOND WALL DRESSING OR STUCCO.

ANCHORING OR LOADING CONDITIONS NOT SHOWN IN THESE DETAILS ARE NOT PART OF THIS APPROVAL.

A LOAD DURATION INCREASE IS USED IN DESIGN OF ANCHORS INTO WOOD ONLY.

MATERIALS INCLUDING BUT NOT LIMITED TO STEEL/METAL SCREWS, THAT COME INTO CONTACT WITH OTHER DISSIMILAR MATERIALS SHALL MEET THE REQUIREMENTS OF THE FLORIDA BLDG. CODE SECTION 2003.8.4.

PRODUCT REVISED
as complying with the Florida Building Code
Acceptance No 11-1219.13
Expiration Date DEC 04, 2012
By Shaq I. Chaudhry
Official Date Product Control

NOTE:
GLASS CAPACITIES ON THIS SHEET ARE BASED ON ASTM E1300-04 (3 SEC. GUSTS) AND FLORIDA BUILDING COMMISSION DECLARATORY STATEMENT DCA05-DEC-219

Engr: JAVAD AHMAD
CIVIL
FLA. PE # 70592
C.A.N. 3538

APR 26 2012


AL-FAROOQ CORPORATION
ENGINEERS & PRODUCT DEVELOPMENT
1235 S.W. 87 AVE
MIAMI, FLORIDA 33174
TEL. (305) 264-8100 FAX. (305) 262-6978


COMP-ANL\W03-58SM

SERIES MK-2 ALUM ENTRANCE DOOR (L.M.I.)


SMI Aluminum Systems, LLC.
11500 MIRAMAR PARKWAY SUITE 300
MIRAMAR, FL. 33025
TEL. (305) 888-6288 FAX. (305) 888-6289


revisions:

| no | date | by | description |
|---|---|---|---|
| C | 11.25.08 | | UPDATED FOR 2007 FBC |
| D | 12.05.08 | | REV. PER BCCO COMMENTS |
| E | 01.30.12 | | GENERAL REVISION |
| F | 03.15.12 | | REV. PER PERA COMMENTS |
| G | 04.11.12 | | NO CHANGE THIS SHEET |

date: 07-30-03
scale: 1/2"=1'-0"
dr. by: HAMID
chk. by:

drawing no.
W03-58

| SINGLE OR DOUBLE ENTRANCE DOORS WITH TRANSOM | | | | | |
|---|---|---|---|---|---|
| DESIGN LOAD CAPACITY – PSF | | | | | |
| NOMINAL DIMS. | | | | GLASS TYPES 'A', 'B', 'C' OR 'D' | |
| SINGLE DOOR TRANSOM WIDTH INCHES | DOUBLE DOOR TRANSOM WIDTH INCHES | DOOR HEIGHT INCHES | TRANSOM HEIGHT INCHES | EXT. (+) | INT. (–) |
| 30 | 60 | 90 | 24 | 90.0 | 90.0 |
| 33 | 66 | | 24 | 90.0 | 90.0 |
| 36 | 72 | | 24 | 90.0 | 90.0 |
| 30 | 60 | 96 | 24 | 90.0 | 90.0 |
| 33 | 66 | | 24 | 90.0 | 90.0 |
| 36 | 72 | | 24 | 88.9 | 88.9 |

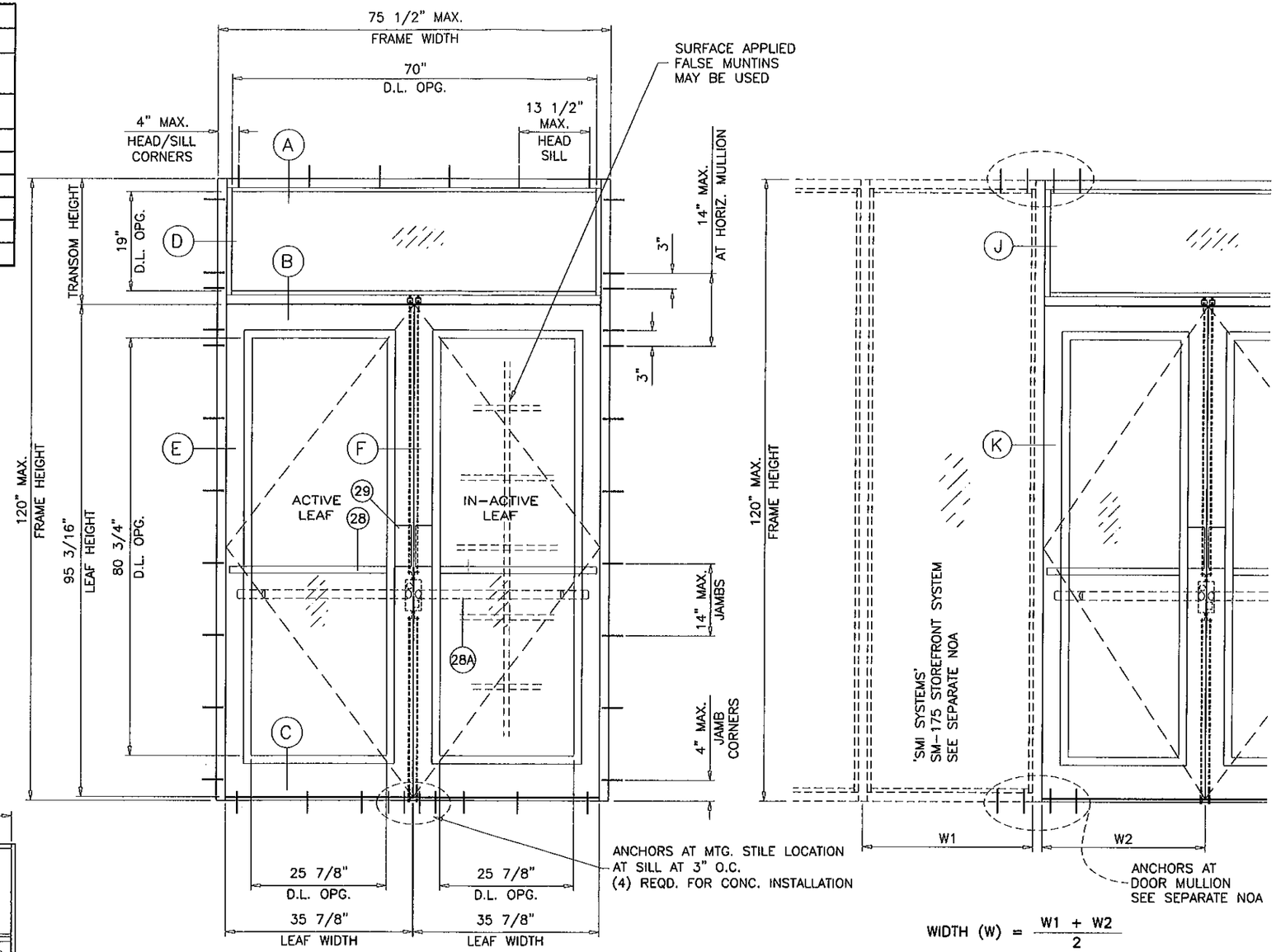


( O/XX )

TYPICAL ELEVATION

WIDTH (W) = $\frac{W1 + W2}{2}$

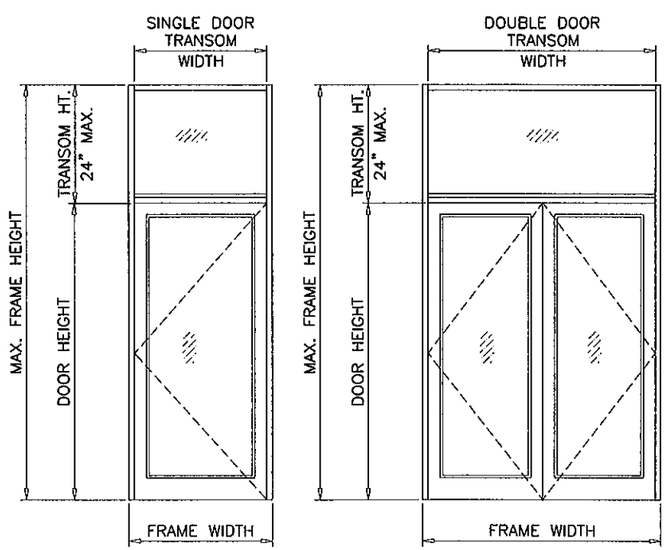


( O/X ) ( O/XX )

FRAME WIDTH = WIDTH + 3.500"

FRAME HEIGHT = DOOR HEIGHT + TRANSOM HEIGHT
FRAME WIDTH (X DOORS) = SINGLE LEAF WIDTH + 3.625"
FRAME WIDTH (XX DOORS) = DOUBLE LEAF WIDTH + 3.750"
D.L.O. HEIGHT = LEAF HEIGHT – 14.438"
D.L.O. WIDTH = LEAF WIDTH – 10.000"

NOTE:
GLASS CAPACITIES ON THIS SHEET ARE BASED ON ASTM E1300-04 (3 SEC. GUSTS) AND FLORIDA BUILDING COMMISSION DECLARATORY STATEMENT DCA05-DEC-219

PRODUCT REVISED as complying with the Florida Building Code
Acceptance No 11-1219.13
Expiration Date 12/4/13
By [signature]
Miami Dade Product Control

Engr: JAVAD AHMAD
CIVIL
FLA. PE # 70592
C.A.N. 3538

APR 26 2012


AL-FAROOQ CORPORATION
ENGINEERS & PRODUCT DEVELOPMENT
1235 S.W. 87 AVE
MIAMI, FLORIDA 33174
TEL. (305) 264-8100 FAX. (305) 262-6978


COMP-ANL\W03-58SM

SERIES MK-2 ALUM ENTRANCE DOOR (L.M.I.)


SMI Aluminum Systems, LLC.
11500 MIRAMAR PARKWAY SUITE 300
MIRAMAR, FL. 33025
TEL. (305) 888-6288 FAX. (305) 888-6289


revisions:

| no | date | by | description |
|---|---|---|---|
| C | 11.25.08 | | UPDATED FOR 2007 FBC |
| D | 12.05.08 | | REV. PER BCCO COMMENTS |
| E | 01.30.12 | | GENERAL REVISION |
| F | 03.15.12 | | REV. PER PERA COMMENTS |
| G | 04.11.12 | | REV. PER PERA COMMENTS |

date: 07-30-03
scale: 1/2"=1'-0"
dr. by: HAMID
chk. by:

drawing no. W03-58

sheet 2 of 9

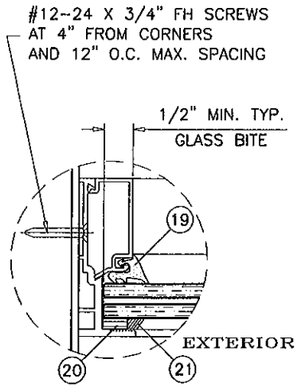


TRANSOM JAMB

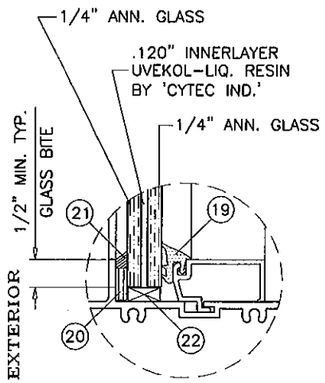


GLASS TYPE 'A'

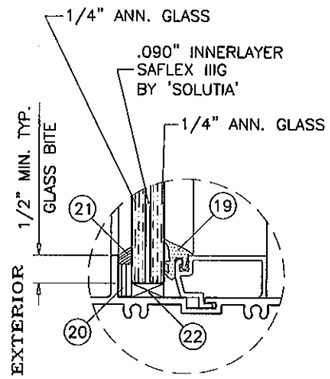


GLASS TYPE 'B'

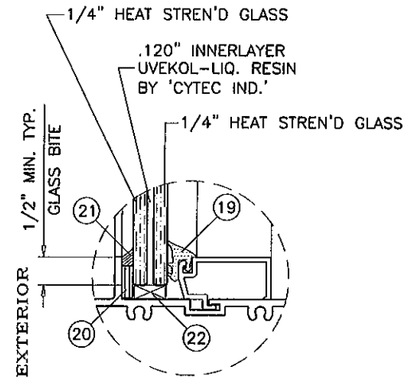


GLASS TYPE 'C'

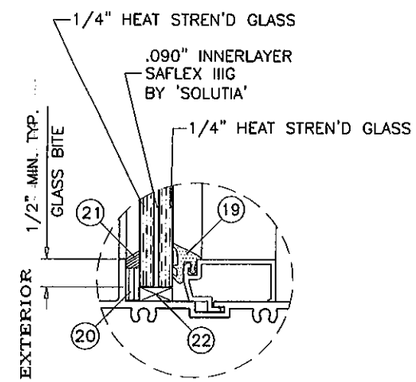


GLASS TYPE 'D'

GLAZING DETAILS TRANSOM

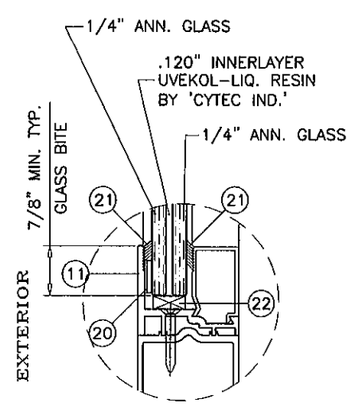


GLASS TYPE 'A'

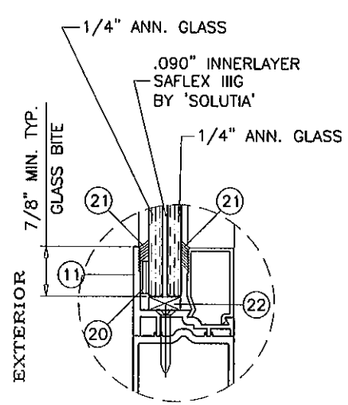


GLASS TYPE 'B'

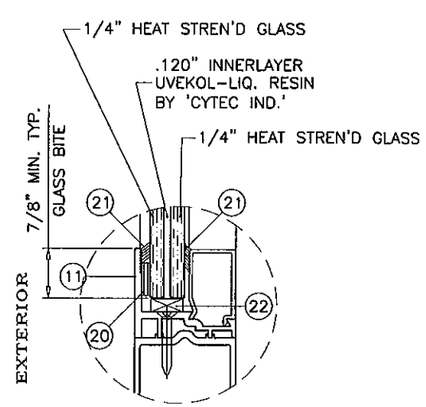


GLASS TYPE 'C'

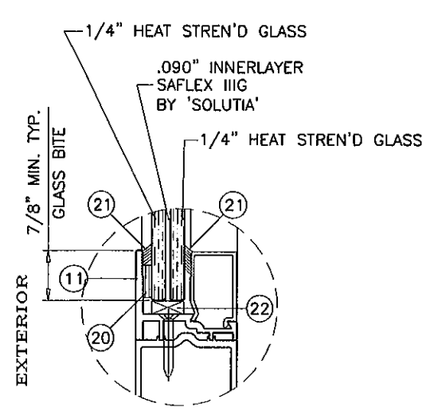


GLASS TYPE 'D'

GLAZING DETAILS DOOR LEAF

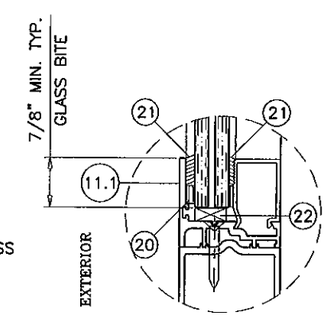


ALT. EXTERIOR GLASS STOP

PRODUCT REVISED
as complying with the Florida
Building Code
Acceptance No. 11-1219.13
Expiration Date 12/4/13
By Shag I. Chaudhry
Miami Dade/Product Control

Engr: JAVAD AHMAD
CIVIL
FLA. PE # 70592
C.A.N. 3538

APR 26 2012


AL-FAROOQ CORPORATION
ENGINEERS & PRODUCT DEVELOPMENT
1235 S.W. 87 AVE
MIAMI, FLORIDA 33174
TEL. (305) 264-8100 FAX. (305) 262-6978
COMP-ANL\W03-58SM


SERIES MK-2 ALUM ENTRANCE DOOR (L.M.I.)


SMI Aluminum Systems, LLC.
11500 MIRAMAR PARKWAY SUITE 300
MIRAMAR, FL. 33025
TEL. (305) 888-6288 FAX. (305) 888-6289


revisions:

| no | date | by | description |
|---|---|---|---|
| C | 11.25.08 | | UPDATED FOR 2007 FBC |
| D | 12.05.08 | | REV. PER BCCO COMMENTS |
| E | 01.30.12 | | GENERAL REVISION |
| F | 03.15.12 | | NO CHANGE THIS SHEET |
| G | 04.11.12 | | NO CHANGE THIS SHEET |

date: 07-30-03
scale: 3/8" = 1"
dr. by: HAMID
chk. by:

drawing no.
W03-58

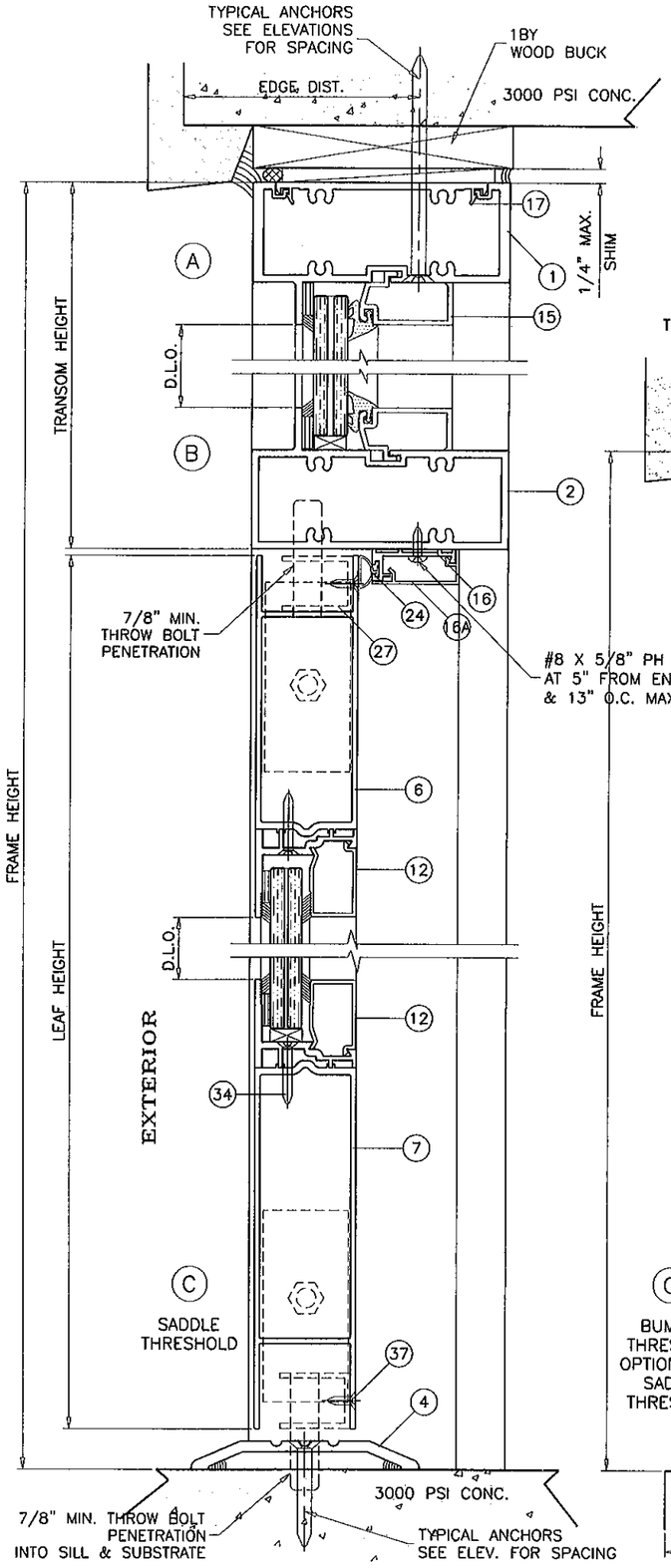


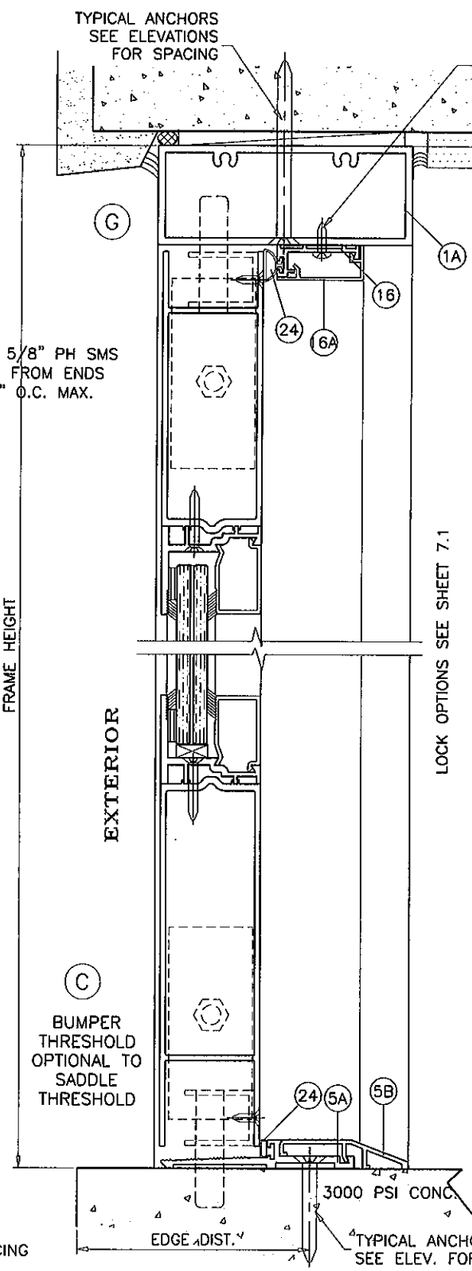


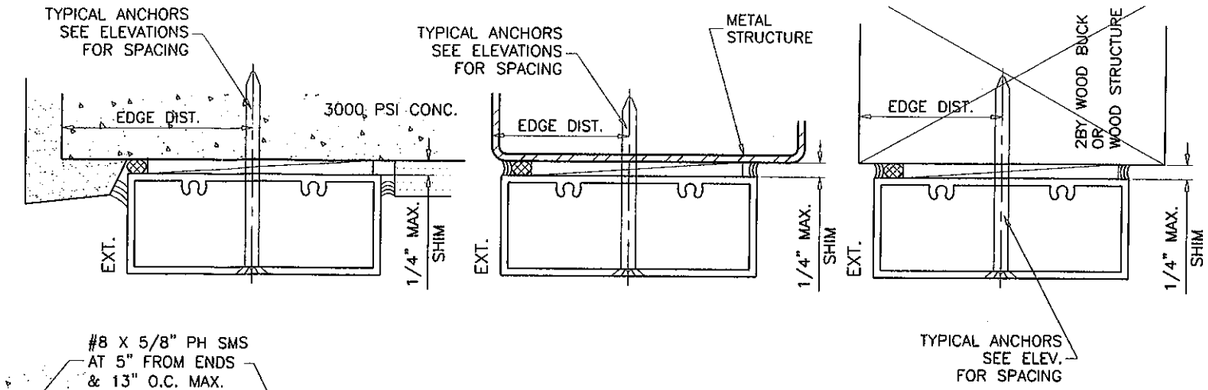


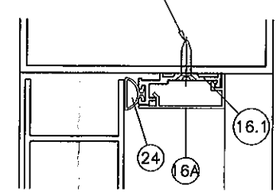


ALT. DOOR STOP

PRODUCT REVISED
as complying with the Florida Building Code
Acceptance No 11-1219.13
Expiration Date 12/4/13
By
Miami Dade Product Control

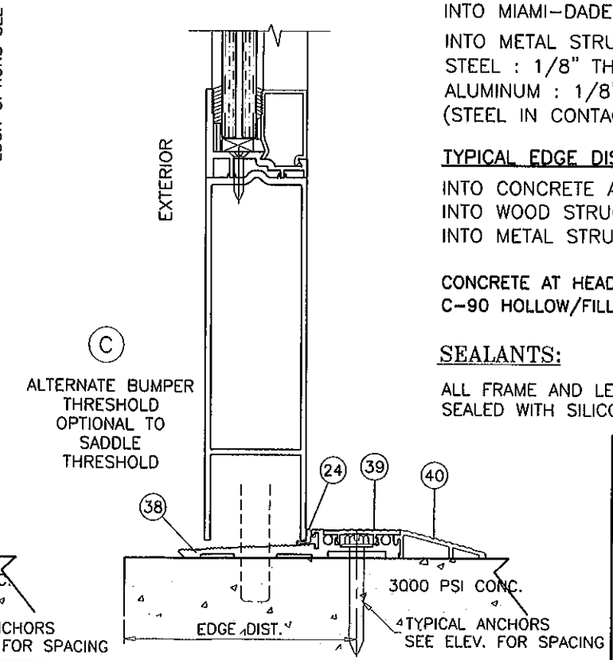


WOOD BUCKS AND METAL STRUCTURE NOT BY 'SMI SYSTEMS' MUST SUSTAIN LOADS IMPOSED BY GLAZING SYSTEM AND TRANSFER THEM TO THE BUILDING STRUCTURE.

## TYPICAL ANCHORS: SEE ELEV. FOR SPACING

1/4" DIA. ULTRACON BY 'ELCO' (Fu=177 KSI, Fy=155 KSI)

INTO 2BY WOOD BUCKS OR WOOD STRUCTURES
1-3/8" MIN. PENETRATION INTO WOOD

THRU 1BY BUCKS INTO CONC. OR MASONRY
1-1/4" MIN. EMBED INTO CONC. OR MASONRY

DIRECTLY INTO CONC. OR MASONRY
1-3/8" MIN. EMBED INTO CONC.
1-1/4" MIN. EMBED INTO MASONRY
1-3/4" MIN. EMBED INTO CONC. AT SILL ONLY

1/4" DIA. TEKS/DRIL-FLEX SELF DRILLING SCREWS (GRADE 2 CRS)

INTO MIAMI-DADE COUNTY APPROVED MULLIONS (MIN. THK. = 1/8")

INTO METAL STRUCTURES
STEEL : 1/8" THK. MIN. (Fy = 36 KSI MIN.)
ALUMINUM : 1/8" THK. MIN. (6063-T5 MIN.)
(STEEL IN CONTACT WITH ALUMINUM TO BE PLATED OR PAINTED)

TYPICAL EDGE DISTANCE

INTO CONCRETE AND MASONRY = 2-1/2" MIN.
INTO WOOD STRUCTURE = 1" MIN.
INTO METAL STRUCTURE = 3/4" MIN.

CONCRETE AT HEAD, SILL OR JAMBS f'c = 3000 PSI MIN.
C-90 HOLLOW/FILLED BLOCK AT JAMBS f'm = 2000 PSI MIN.

## SEALANTS:

ALL FRAME AND LEAF CORNERS AND INSTALLATION SCREWS SEALED WITH SILICONE.

Engr: JAVAD AHMAD
CIVIL
FLA. PE # 70592
C.A.N. 3538

APR 26 2012


AL-FAROOQ CORPORATION
ENGINEERS & PRODUCT DEVELOPMENT
1235 S.W. 87 AVE
MIAMI, FLORIDA 33174
TEL. (305) 264-8100 FAX. (305) 262-6978
COMP-ANL\W03-58SM


SERIES MK-2 ALUM ENTRANCE DOOR (L.M.I.)


SMI Aluminum Systems, LLC.
11500 MIRAMAR PARKWAY SUITE 300
MIRAMAR, FL. 33025
TEL. (305) 888-6288 FAX. (305) 888-6289


revisions:

| no | date | by | description |
|---|---|---|---|
| C | 11.25.08 | | UPDATED FOR 2007 FBC |
| D | 12.05.08 | | REV. PER BCCO COMMENTS |
| E | 01.30.12 | | GENERAL REVISION |
| F | 03.15.12 | | REV. PER PERA COMMENTS |
| G | 04.11.12 | | REV. PER PERA COMMENTS |

date: 07-30-03
scale: 3/8" = 1"
dr. by: HAMID
chk. by:

drawing no.
W03-58

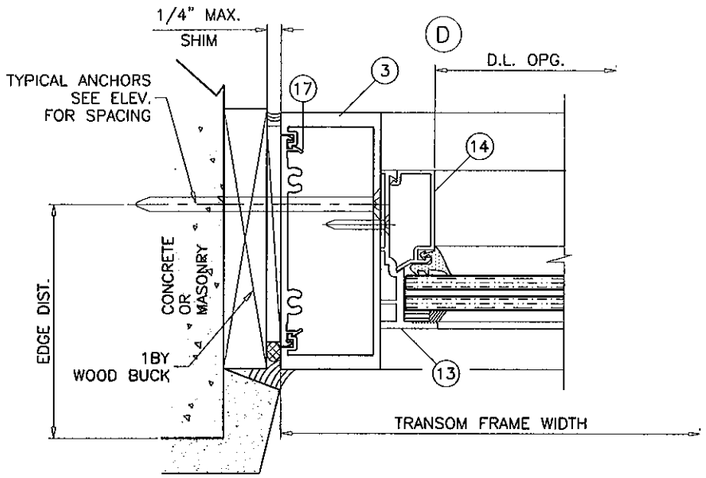


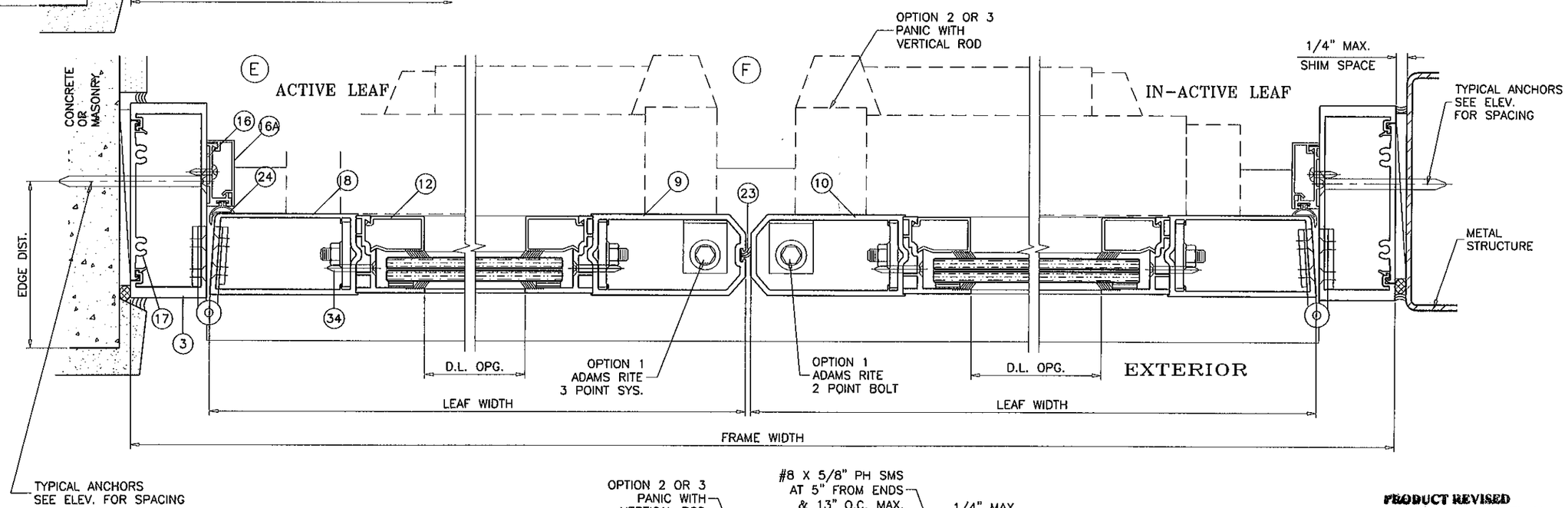


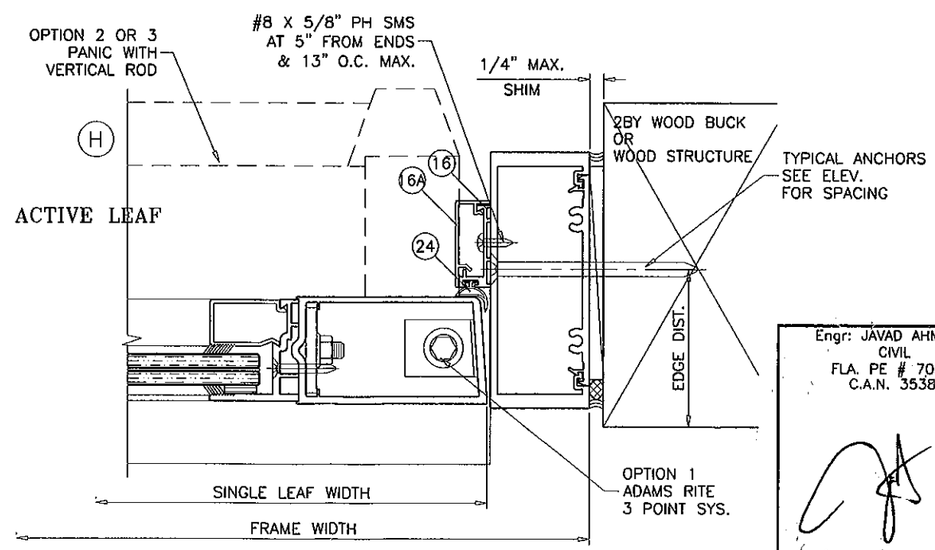


**PRODUCT REVISED**
**in complying with the Florida Building Code**
**Acceptance No.** 11-1219.13
**Expiration Date** 12/4/13
**By** [signature]
**Miami Dade Product Control**

Engr: JAVAD AHMAD
CIVIL
FLA. PE # 70592
C.A.N. 3538

APR 26 2012

**AL-FAROOQ CORPORATION**
ENGINEERS & PRODUCT DEVELOPMENT
1235 S.W. 87 AVE
MIAMI, FLORIDA 33174
TEL. (305) 264-8100 FAX. (305) 262-6978

COMP-ANL\W03-58SM

SERIES MK-2 ALUM ENTRANCE DOOR (L.M.I.)

**SMI Aluminum Systems, LLC.**
11500 MIRAMAR PARKWAY SUITE 300
MIRAMAR, FL. 33025
TEL. (305) 888-6288 FAX. (305) 888-6289

revisions:

| no | date | by | description |
|---|---|---|---|
| C | 11.25.08 | | UPDATED FOR 2007 FBC |
| D | 12.05.08 | | REV. PER BCCO COMMENTS |
| E | 01.30.12 | | GENERAL REVISION |
| F | 03.15.12 | | REV. PER PERA COMMENTS |
| G | 04.11.12 | | NO CHANGE THIS SHEET |

date: 07-30-03
scale: 3/8" = 1"
dr. by: HAMID
chk. by:

drawing no.
W03-58

sheet 5 of 9

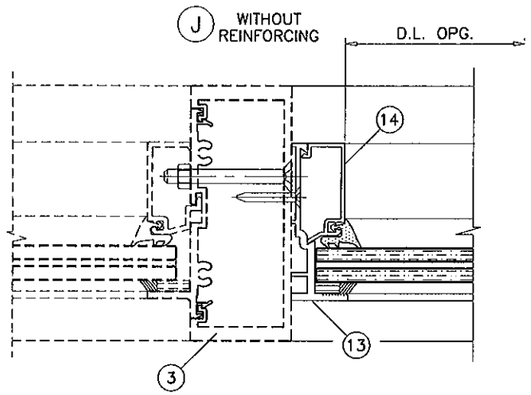


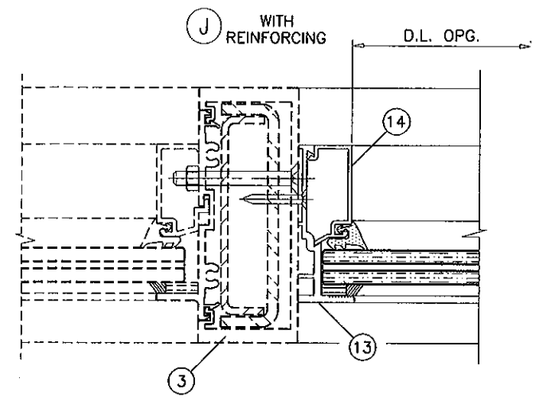


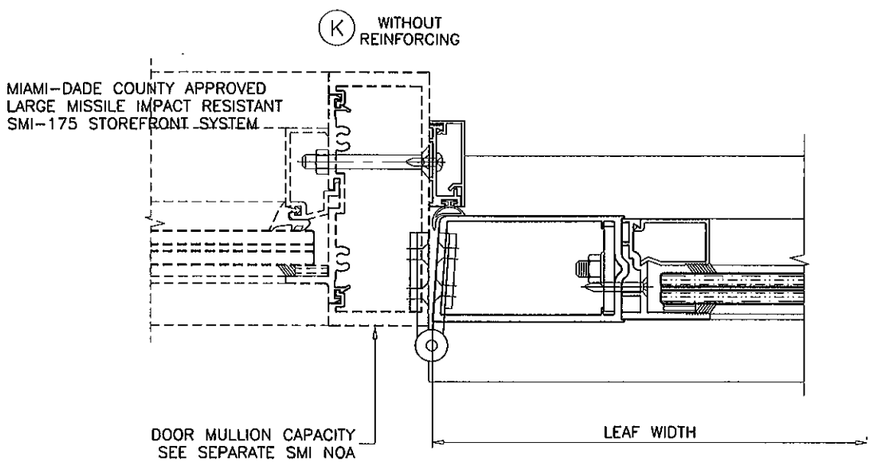


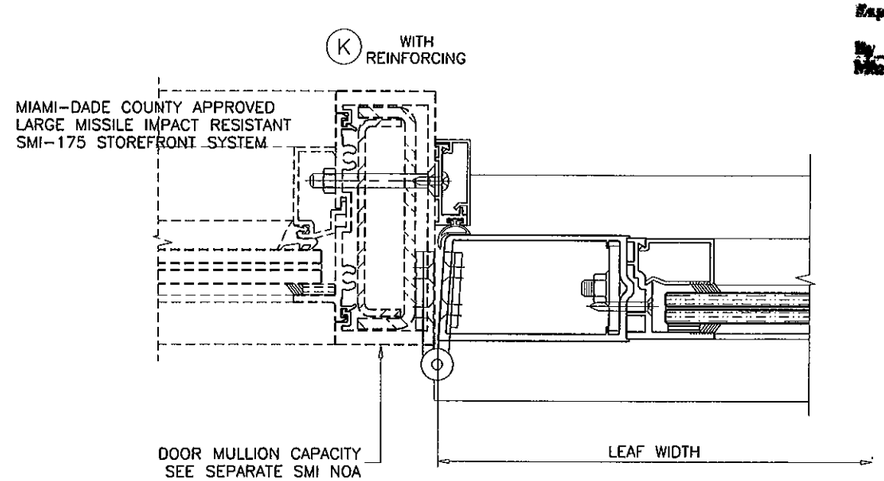


PRODUCT REVISED
as complying with the Florida
Building Code
Acceptance No 11-1219.13
Expiration Date 12/4/13
By Isaac L. Chang
Miami Dade Product Control

SEE SEPARATE NOA FOR DESIGN LOAD CAPACITY OF STOREFRONT, DOOR MULLION AND DOOR MULLION ANCHORS. LOWER VALUES FROM STOREFRONT NOA OR DOOR CAPACITY CHARTS WILL APPLY TO ENTIRE SYSTEM.

Engr: JAVAD AHMAD
CIVIL
FLA. PE # 70592
C.A.N. 3538

APR 26 2012


AL-FAROOQ CORPORATION
ENGINEERS & PRODUCT DEVELOPMENT
1235 S.W. 87 AVE
MIAMI, FLORIDA 33174
TEL. (305) 264-8100 FAX. (305) 262-6978
COMP-ANL\W03-58SM


SERIES MK-2 ALUM ENTRANCE DOOR (L.M.I.)


SMI Aluminum Systems, LLC.
11500 MIRAMAR PARKWAY SUITE 300
MIRAMAR, FL. 33025
TEL. (305) 888-6288 FAX. (305) 888-6289


revisions:

| no | date | by | description |
|---|---|---|---|
| C | 11.25.08 | | UPDATED FOR 2007 FBC |
| D | 12.05.08 | | REV. PER BCCO COMMENTS |
| E | 01.30.12 | | GENERAL REVISION |
| F | 03.15.12 | | REV. PER PERA COMMENTS |
| G | 04.11.12 | | NO CHANGE THIS SHEET |

date: 07-30-03
scale: 3/8" = 1"
dr. by: HAMID
chk. by:

drawing no.
W03-58

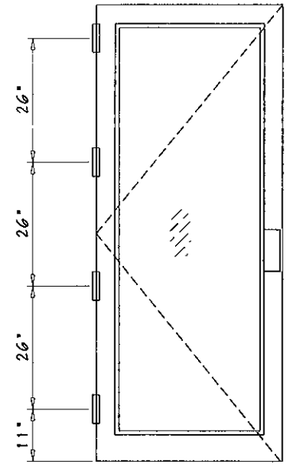


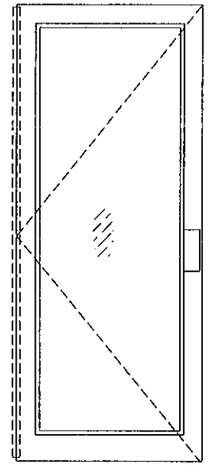

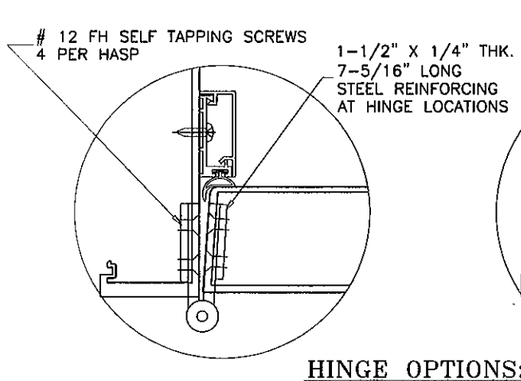


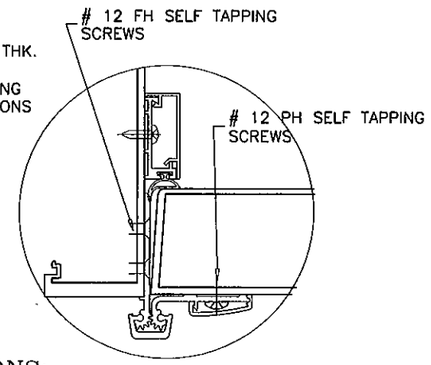


## HINGE OPTIONS:

**4-1/2" BRASS BUTT HINGES**

HAGER # BB-1199

**CONCEALED ALUM ROTON HINGE**

CONTINUOUS ALUMINUM
ROTTON HINGE HAGER #780-112
FASTENED TO FRAME JAMB AND TO JAMB STILE
WITH (27) TOTAL SCREWS ON 8/0 DOORS
WITH (25) TOTAL SCREWS ON 6/8 & 7/0 DOORS

| ITEM # | PART # | REQD. | DESCRIPTION | MATERIAL | MANF./SUPPLIER/REMARKS |
|---|---|---|---|---|---|
| 1 | SMI-001 | 1 | FRAME HEAD | 6063-T6 | – |
| 1A | SMI-006 | 1 | ALT. FRAME HEAD | 6063-T6 | – |
| 2 | SMI-018 | AS REQD. | FRAME TRANSOM | 6063-T6 | – |
| 3 | SMI-005 | 2 | FRAME JAMB | 6063-T6 | – |
| 4 | SMI-127 | 1 | SADDLE THRESHOLD | 6063-T5 | – |
| 5A | SMI-023 | 1 | BUMPER THRESHOLD | 6063-T5 | – |
| 5B | SMI-024 | 1 | ADA THRESHOLD COVER | 6063-T5 | – |
| 6 | SMI-012 | 1/ LEAF | TOP RAIL | 6063-T5 | – |
| 7 | SMI-013 | 1/ LEAF | BOTTOM RAIL | 6063-T5 | – |
| 8 | SMI-011 | 1/ LEAF | HINGE STILE | 6063-T5 | – |
| 9 | SMI-009 | 1 | LOCK STILE (ACTIVE) | 6063-T5 | – |
| 10 | SMI-010 | 1 | LOCK STILE (IN-ACTIVE) | 6063-T5 | – |
| 11 | SMI-016 | 4/ LEAF | EXTERIOR GLASS STOP (DOOR) | 6063-T5 | – |
| 11.1 | SMI-096 | 4/ LEAF | ALT. EXTERIOR GLASS STOP (DOOR) | 6063-T5 | – |
| 12 | SMI-008 | 4/ LEAF | INTERIOR GLASS STOP (DOOR) | 6063-T5 | – |
| 13 | SMI-016 | – | EXTERIOR GLASS STOP (TRANSOM JAMB) | 6063-T5 | – |
| 14 | SMI-017 | – | INTERIOR GLASS STOP (TRANSOM JAMB) | 6063-T5 | – |
| 15 | SMI-002 | 2/ LITE | GLASS STOP (TRANSOM HEAD/SILL) | 6063-T5 | – |
| 16 | SMI-014 | 3/ DOOR | DOOR STOP | 6063-T5 | – |
| 16.1 | SMI-044 | 3/ DOOR | ALT. DOOR STOP | 6063-T5 | – |
| 16A | SMI-015 | 3/ DOOR | DOOR STOP COVER | 6063-T5 | – |
| 17 | SMI-004 | – | FLAT FILLER | 6063-T6 | 3" LONG AT EACH ANCHOR |
| 19 | SMI-G01 | AS REQD. | WEDGE-IN GASKET | EPDM | GLAZING RUBBER PRODUCTS INC. |
| 20 | SMI-G11 | AS REQD. | GLAZING TAPE (1/2" X 1/8") | FOAM | NORTON |
| 21 | 895 | – | GLAZING COMPOUND | SILICONE | PECORA |
| 22 | SMI-G03 | AS REQD. | SETTING BLOCK (3/8" X 1/4" X 1/2" LONG) | EPDM | FRANK LOWE, (DUROMETER 83±5) |
| 23 | SMI-W01 | AS REQD. | PILE WITH PLASTIC FIN W'STRIPPING | – | – |
| 24 | SMI-B01 | AS REQD. | BULB W'STRIPPING, (DUROMETER 65±5) | VINYL | – |
| 26 | – | 2/ LEAF | 3/8" THREADED ROD WITH NUT | STEEL | – |
| 28 | – | AS REQD. | PUSH BAR | – | – |
| 28A | – | AS REQD. | PANIC EXIT DEVICE W/ CONCEALED VERTICAL RODS | – | 3347 VON DUPRIN OR 5770 REGENT |
| 29 | – | AS REQD. | PULL HANDLE | – | – |
| 30 | – | 2 | THRESHOLD CLIP | ALUMINUM | 2" X 2" X 1/8" X 3/4" LONG |
| 31 | – | 4/ LEAF | SUPPORT PLATE (1-1/2" X 3-3/8" X 3/16") | ALUMINUM | – |
| 33 | #12 X 1-1/2" | AS REQD. | FRAME ASSEMBLY SCREWS | – | HEX H SELF DRILLING |
| 34 | #10 X 1-1/2" | AS REQD. | GLASS STOP SCREWS | – | FH SMS |
| 35 | #12 X 3/4" | AS REQD. | THRESHOLD CLIP SCREWS | – | FH SELF DRILLING |
| 37 | #10 X 5/16" | 2/ GUIDE | GUIDE INSTALLATION SCREWS | – | FH MS |
| 38 | SMI-036 | 1 | ALT. BUMPER THRESHOLD | 6063-T6 | – |
| 39 | SMI-038 | 1 | ALT. ADA THRESHOLD COVER | 6063-T6 | – |
| 40 | SMI-037 | 1 | ALT. ADA THRESHOLD COVER | 6063-T6 | – |

PRODUCT REVISED
as complying with the Florida
Building Code
Acceptance No 11-1219.13
Expiration Date 12/4/13
By Ishwar Chandra
Miami-Dade Product Control

Engr: JAVAD AHMAD
CIVIL
FLA. PE # 70592
C.A.N. 3538

APR 26 2012


**AL-FAROOQ CORPORATION**
ENGINEERS & PRODUCT DEVELOPMENT
1235 S.W. 87 AVE
MIAMI, FLORIDA 33174
TEL (305) 264-8100 FAX. (305) 262-6978


COMP-ANL\W03-58SM

SERIES MK-2 ALUM ENTRANCE DOOR (L.M.I.)


**SMI Aluminum Systems, LLC.**
11500 MIRAMAR PARKWAY SUITE 300
MIRAMAR, FL. 33025
TEL. (305) 888-6288 FAX. (305) 888-6289


revisions:

| no | date | by | description |
|---|---|---|---|
| C | 11.25.08 | | UPDATED FOR 2007 FBC |
| D | 12.05.08 | | REV. PER BCCO COMMENTS |
| E | 01.30.12 | | GENERAL REVISION |
| F | 03.15.12 | | REV. PER PERA COMMENTS |
| G | 04.11.12 | | REV. PER PERA COMMENTS |

date: 07-30-03
scale: 3/8" = 1"
dr. by: HAMID
chk. by:

drawing no.
W03-58

## LOCK OPTIONS:
## STANDARD HARDWARE

### OPTION #1:

**SINGLE LEAF DOORS:**

ALL SINGLE LEAF DOORS TO BE FITTED WITH ADAMS RITE 3 POINT LOCK SYSTEM

**DOUBLE LEAF DOORS:**

ACTIVE LEAF:

THREE POINT LOCK SYSTEM WITH 8 PLY HOOK LOCK BOLT ADAMS RITE NO. 4015 & 4016, KEY OPERATED ON EXTERIOR AND THUMB-TURN ON INTERIOR, LOCATED AT 34" FROM BOTTOM OF PANEL

INACTIVE LEAF:

TWO POINT LOCK SYSTEM ADAMS RITE NO. MS 1880 WITH THUMB TURN ON THE INTERIOR, LOCATED AT 34" FROM BOTTOM OF PANEL

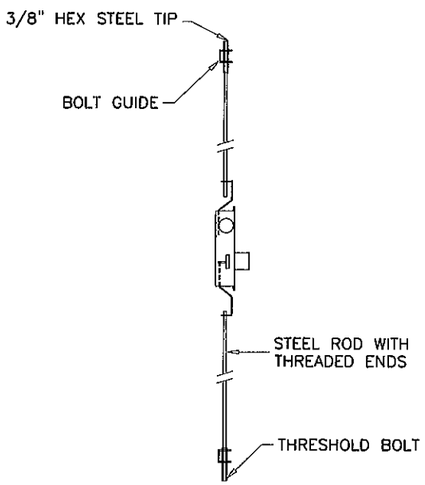


## LOCK OPTIONS:
## PANIC EXIT DEVICES

### OPTION #2:

ACTIVE/INACTIVE LEAF

VON DUPRIN SERIES 3347 CONCEALED VERTICAL ROD PANIC EXIT DEVICE
WITH 5/8" THROW LATCH BOLT PENETRATING 3/4" AT HEAD & SILL
TOP STRIKE #338 AT HEAD ONLY

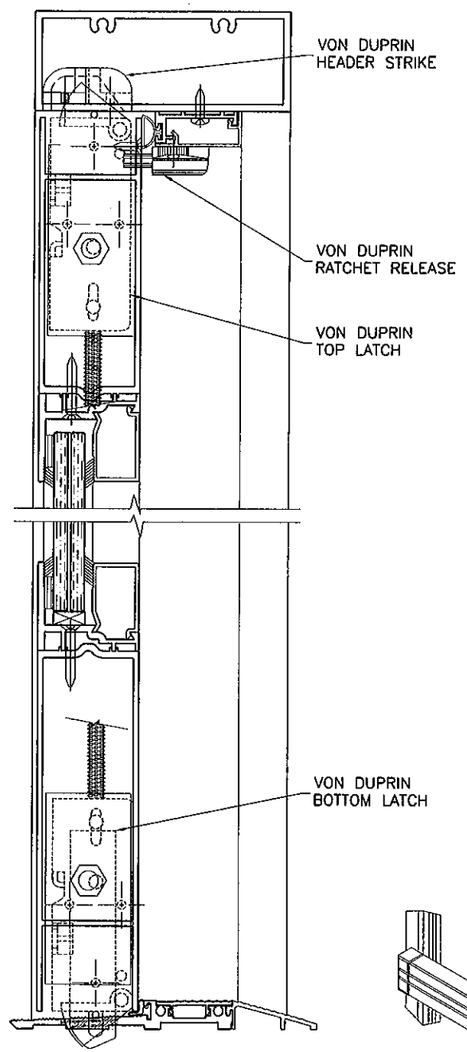


CONCRETE TO BE DRILLED OUT FOR PANIC LATCHES AT SILL

### OPTION #3:

ACTIVE/INACTIVE LEAF

REGENT SERIES 5770 CONCEALED VERTICAL ROD PANIC EXIT DEVICE
WITH 5/8" THROW LATCH BOLT PENETRATING 3/4" AT HEAD & SILL
TOP STRIKE #57-SK10 AT HEAD ONLY

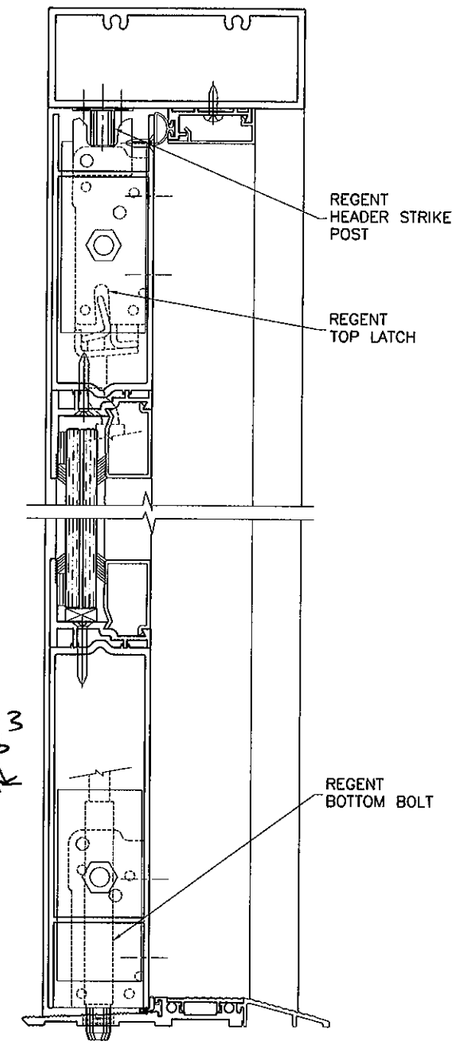


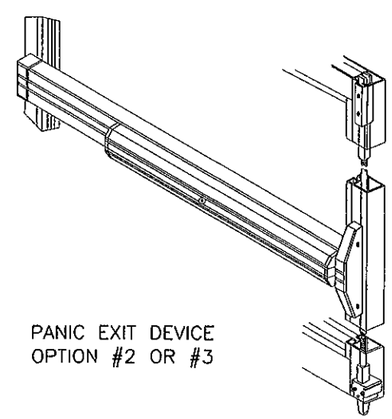

PANIC EXIT DEVICE
OPTION #2 OR #3

PRODUCT REVISED
as complying with the Florida Building Code
Acceptance No. 11-1219.13
Expiration Date 12/4/13
By Ishaq I. Chanda
Miami-Dade Product Control

Engr: JAVAD AHMAD
CIVIL
FLA. PE # 70592
C.A.N. 3538

APR 26 2012


AL-FAROOQ CORPORATION
ENGINEERS & PRODUCT DEVELOPMENT
1235 S.W. 87 AVE
MIAMI, FLORIDA 33174
TEL. (305) 264-8100 FAX. (305) 262-6978


COMP-ANL\W03-58SM

SERIES MK-2 ALUM ENTRANCE DOOR (L.M.I.)


SMI Aluminum Systems, LLC.
11500 MIRAMAR PARKWAY SUITE 300
MIRAMAR, FL. 33025
TEL. (305) 888-6288 FAX. (305) 888-6289


revisions:

| no | date | by | description |
|---|---|---|---|
| G | 04.11.12 | | REV. PER PERA COMMENTS |

date: 07-30-03
scale: 3/8" = 1"
dr. by: HAMID
chk. by:

drawing no.
W03-58

sheet 7.1 of 9

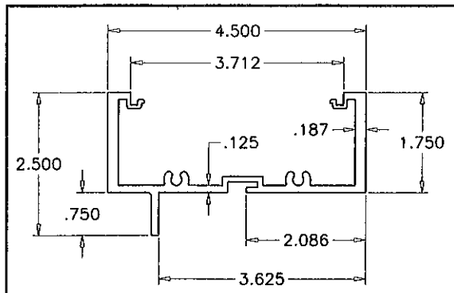


1 FRAME HEAD

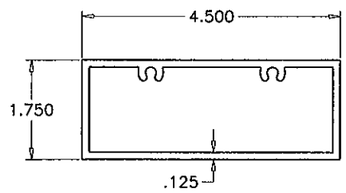


1A ALT. FRAME HEAD

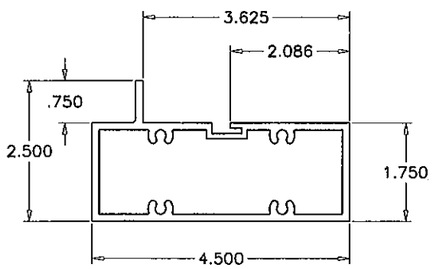


2 FRAME TRANSOM

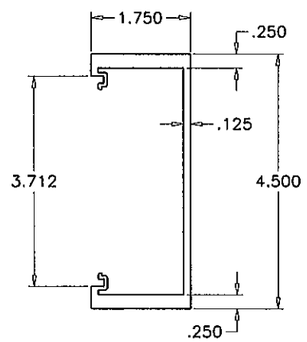


3 FRAME JAMB

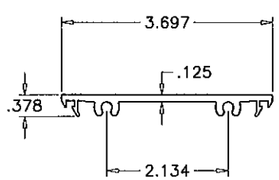


17 FLAT FILLER

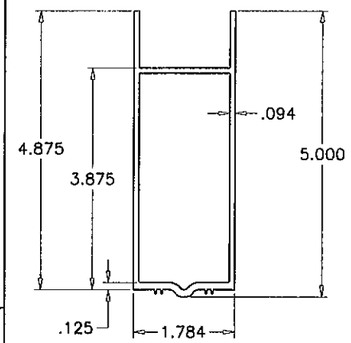


6 TOP RAIL

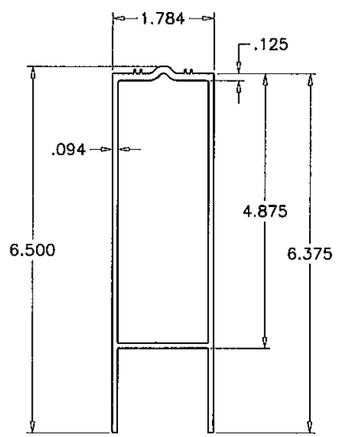


7 BOTTOM RAIL

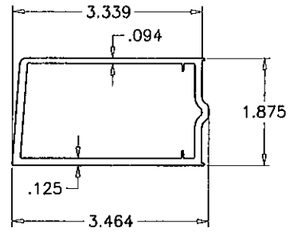


8 HINGE STILE

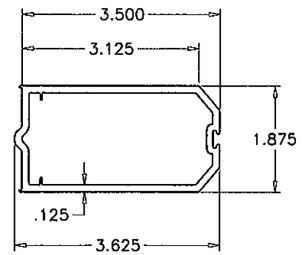


9 LOCK STILE (ACTIVE)

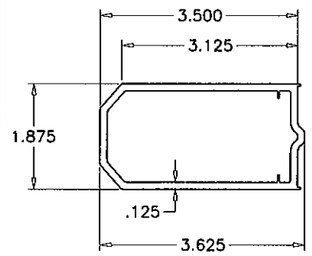


10 LOCK STILE (IN-ACTIVE)

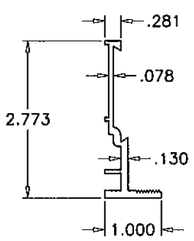


13 EXTERIOR GLASS STOP (TRANSOM)

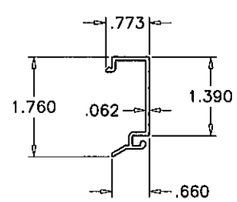


14 INTERIOR GLASS STOP (TRANSOM)

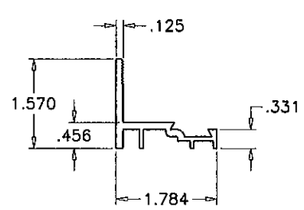


11 EXTERIOR GLASS STOP (DOOR)

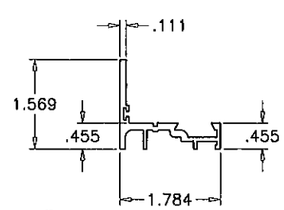


11.1 ALT. EXTERIOR GLASS STOP (DOOR)

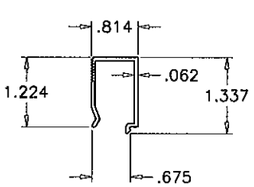


12 INTERIOR GLASS STOP (DOOR)

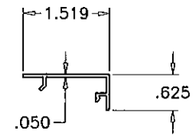


16A DOOR STOP COVER

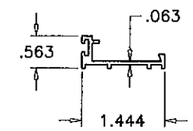


16 DOOR STOP

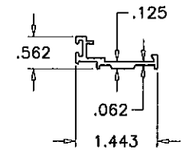


16.1 DOOR STOP

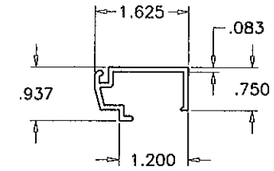


15 GLASS STOP (TRANSOM HEAD/SILL)

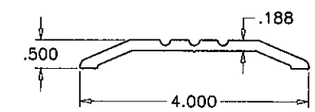


4 SADDLE THRESHOLD

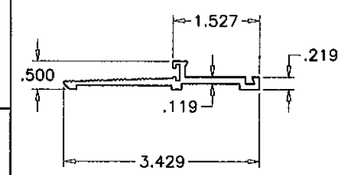


5A BUMPER THRESHOLD

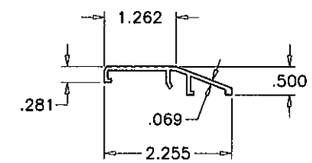


5B ADA THRESHOLD COVER

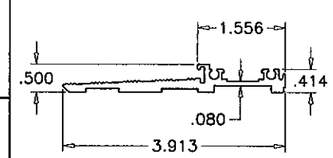


38 ALT. BUMPER THRESHOLD

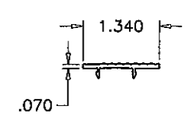


39

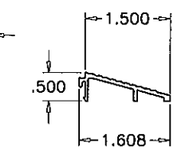


40

ALT. THRESHOLD COVERS

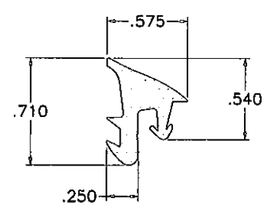


HARDNESS = 72±5 SHORE A
TENSILE STRENGTH (100% STRAIN)= 1200 PSI
TENSILE STRENGTH (BREAK)= 1450 PSI
ELONGATION AT BREAK = 300%
TEAR STRENGTH = 150 LBF/IN
SPECIFIC GRAVITY = 1.20

19 WEDGE-IN GASKET
SCALE 1:1

**PRODUCT REVISED**
as complying with the Florida
Building Code
Acceptance No. 11-1219.13
Expiration Date 12/6/13
By Ishaq I. Chanda
Miami Dade Product Control

Engr: JAVAD AHMAD
CIVIL
FLA. PE # 70592
C.A.N. 3538

APR 26 2012


**AL-FAROOQ CORPORATION**
ENGINEERS & PRODUCT DEVELOPMENT
1235 S.W. 87 AVE
MIAMI, FLORIDA 33174
TEL (305) 264-8100 FAX. (305) 262-6978
COMP-ANL\W03-58SM


SERIES MK-2 ALUM ENTRANCE DOOR (L.M.I.)


**SMI Aluminum Systems, LLC.**
11500 MIRAMAR PARKWAY SUITE 300
MIRAMAR, FL. 33025
TEL. (305) 888-6288 FAX. (305) 888-6289


revisions:

| no | date | by | description |
|---|---|---|---|
| C | 11.25.08 | | UPDATED FOR 2007 FBC |
| D | 12.05.08 | | REV. PER BCCO COMMENTS |
| E | 01.30.12 | | GENERAL REVISION |
| F | 03.15.12 | | REV. PER PERA COMMENTS |
| G | 04.11.12 | | REV. PER PERA COMMENTS |

date: 07-30-03
scale: 3/8" = 1"
dr. by: HAMID
chk. by:

drawing no.
W03-58

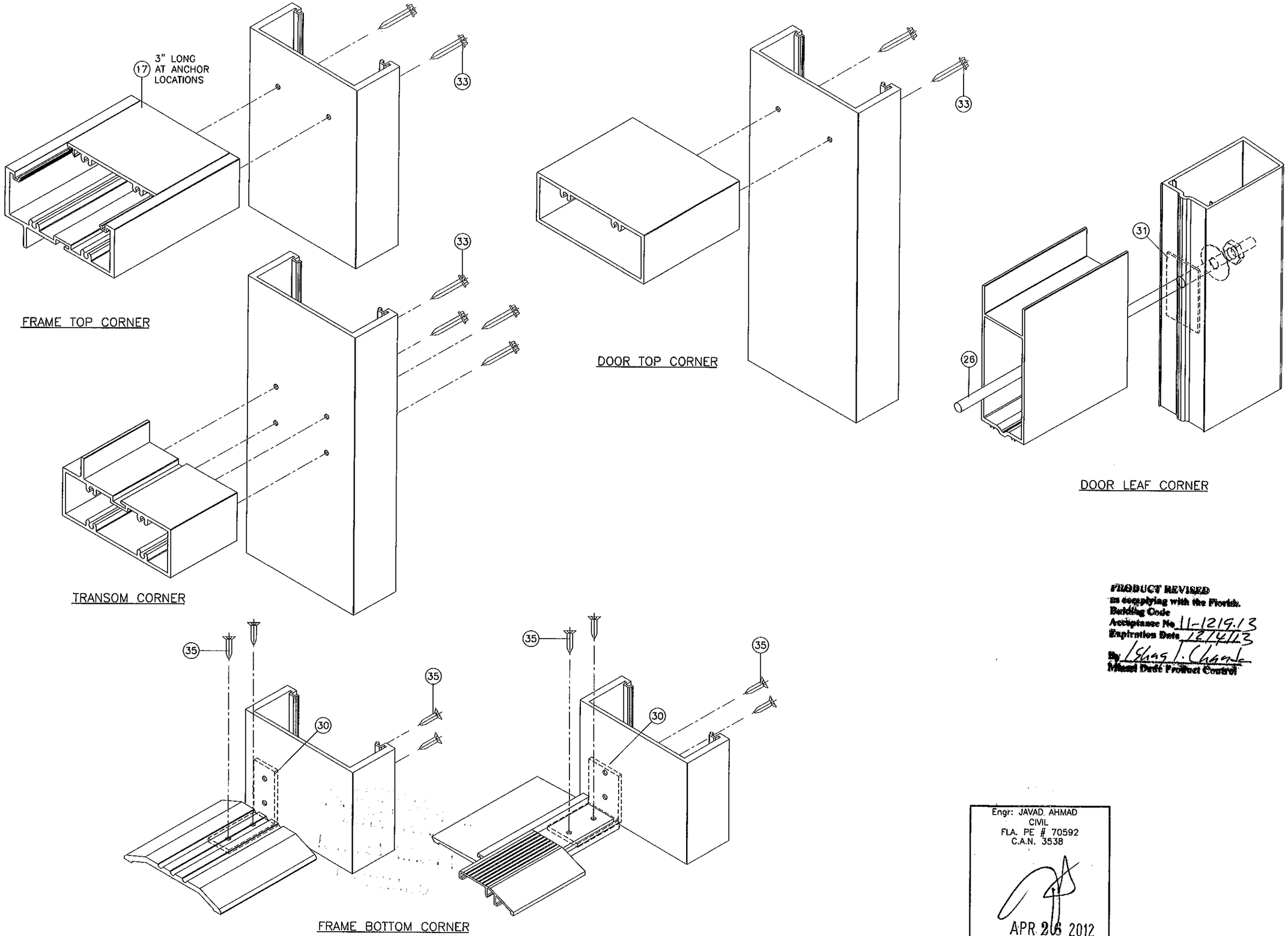


PRODUCT REVISED
as complying with the Florida
Building Code
Acceptance No. 11-1219.13
Expiration Date 12/4/13
By Ishag T. Chanda
Miami Dade Product Control

Engr: JAVAD AHMAD
CIVIL
FLA. PE # 70592
C.A.N. 3538

APR 26 2012

afc

**AL-FAROOQ CORPORATION**
ENGINEERS & PRODUCT DEVELOPMENT
1235 S.W. 87 AVE
MIAMI, FLORIDA 33174
TEL. (305) 264-8100 FAX. (305) 262-6978

COMP-ANL\W03-58SM

SERIES MK-2 ALUM ENTRANCE DOOR (L.M.I.)

**SMI Aluminum Systems, LLC.**
11500 MIRAMAR PARKWAY SUITE 300
MIRAMAR, FL. 33025
TEL. (305) 888-6288 FAX. (305) 888-6289

revisions:

| no | date | by | description |
|---|---|---|---|
| C | 11.25.08 | | UPDATED FOR 2007 FBC |
| D | 12.05.08 | | REV. PER BCCO COMMENTS |
| E | 01.30.12 | | GENERAL REVISION |
| F | 03.15.12 | | REV. PER PERA COMMENTS |
| G | 04.11.12 | | NO CHANGE THIS SHEET |

date: 07-30-03
scale: 3/8" = 1"
dr. by: HAMID
chk. by:

drawing no.
W03-58

sheet 9 of 9