MIAMI-DADE COUNTY
DEPARTMENT OF PERMITTING, ENVIRONMENT, AND REGULATORY AFFAIRS (PERA)
BOARD AND CODE ADMINISTRATION DIVISION

MIAMI-DADE COUNTY, FLORIDA
PRODUCT CONTROL SECTION
11805 SW 26 Street, Room 208
Miami, Florida 33175-2474
T (786) 315-2590 F (786) 315-2599
www.miamidade.gov/pera/

# NOTICE OF ACCEPTANCE (NOA)

**PGT Industries, Inc.**
**1070 Technology Drive**
**North Venice, FL 34275**

**SCOPE:**

This NOA is being issued under the applicable rules and regulations governing the use of construction materials. The documentation submitted has been reviewed and accepted by Miami-Dade County PERA-Product Control Section to be used in Miami-Dade County and other areas where allowed by the Authority Having Jurisdiction (AHJ).

This NOA shall not be valid after the expiration date stated below. The Miami-Dade County Product Control Section (In Miami-Dade County) and/or the AHJ (in areas other than Miami-Dade County) reserve the right to have this product or material tested for quality assurance purposes. If this product or material fails to perform in the accepted manner, the manufacturer will incur the expense of such testing and the AHJ may immediately revoke, modify, or suspend the use of such product or material within their jurisdiction. PERA reserves the right to revoke this acceptance, if it is determined by Miami-Dade County Product Control Section that this product or material fails to meet the requirements of the applicable building code.

This product is approved as described herein, and has been designed to comply with the Florida Building Code, including the High Velocity Hurricane Zone.

**DESCRIPTION: Series "SH-800" Aluminum Single Hung Window – L.M.I.**

**APPROVAL DOCUMENT:** Drawing No. **MD-SH800LM-01**, titled "SH Window-Large Missile", sheets 1 through 7 of 7, dated 11/11/11 with the latest revision dated 04/09/12, prepared by manufacture, signed and sealed by A. Lynn Miller, P. E., bearing the Miami-Dade County Product Control Approval stamp with the Notice of Acceptance number and Approval date by the Miami-Dade County Product Control Section.

**MISSILE IMPACT RATING: Large Missile and Small Missile Impact Resistant.**

**LABELING:** Each unit shall bear a permanent label with the manufacturer's name or logo, city, state, model/ series and following statement: "Miami-Dade County Product Control Approved" unless otherwise noted herein.

**RENEWAL** of this NOA shall be considered after a renewal application has been filed and there has been no change in the applicable building code negatively affecting the performance of this product.

**TERMINATION** of this NOA will occur after the expiration date or if there has been a revision or change in the materials, use, and/or manufacture of the product or process. Misuse of this NOA as an endorsement of any product, for sales, advertising or any other purposes shall automatically terminate this NOA. Failure to comply with any section of this NOA shall be cause for termination and removal of NOA.

**ADVERTISEMENT:** The NOA number preceded by the words Miami-Dade County, Florida, and followed by the expiration date may be displayed in advertising literature. If any portion of the NOA is displayed, then it shall be done in its entirety.

**INSPECTION:** A copy of this entire NOA shall be provided to the user by the manufacturer or its distributors and shall be available for inspection at the job site at the request of the Building Official.

This NOA consists of this page 1, evidence pages E-1 and E-2, as well as approval document mentioned above.

The submitted documentation was reviewed by **Jaime D. Gascon, P. E.**

MIAMI-DADE COUNTY APPROVED

J. Gascon
4/26/12

## NOTICE OF ACCEPTANCE: EVIDENCE SUBMITTED

### A. DRAWINGS

1. Manufacturer's die drawings and sections.
2. Drawing No. **MD–SH800LM–01**, titled "SH Window–Large Missile", sheets 1 through 7 of 7, dated 11/11/11 with the latest revision dated 04/09/12, prepared by manufacture, signed and sealed by A. Lynn Miller, P. E.

### B. TESTS

1. Test reports on:
   1) Uniform Static Air Pressure Test, Loading per FBC TAS 202–94
   2) Large Missile Impact Test per FBC, TAS 201–94
   3) Cyclic Wind Pressure Loading per FBC, TAS 203–94
   4) Standard Test Method for Determination of Operating Force of vertical sliding windows per ASTM E 2068–00 (2008)

   along with marked–up drawings and installation diagram of Aluminum single hung window, prepared by Fenestration Testing Laboratory, Inc., Test Report No. **FTL–6643**, dated 10/03/11, signed and sealed by Marlin D. Brinson, P. E.

### C. CALCULATIONS

1. Anchor verification calculations and structural analysis, complying with FBC–2010, dated 12/16/11, prepared by manufacture, with the latest revision, dated 04/09/12, signed and sealed by A. Lynn Miller, P. E.
2. **Glazing complies with ASTM E1300–04**

### D. QUALITY ASSURANCE

1. Miami–Dade Department of Permitting, Environment, and Regulatory Affairs (PERA).

### E. MATERIAL CERTIFICATIONS

1. Notice of Acceptance No. **11–0624.02** issued to E.I. DuPont DeNemours & Co., Inc. for their **"DuPont Sentry Glass® Interlayer"** dated 05/26/2010, expiring on 01/14/17.

### F. STATEMENTS

1. Statement letter of compliance with the FBC–2007 and FBC–2010, dated 12/16/11, signed and sealed by A. Lynn Miller, P. E.
2. Statement letter of no financial interest and conformance, dated 12/16/11, signed and sealed by A. Lynn Miller, P. E.
3. Laboratory compliance letter for Test Report No. **FTL–6643**, issued by Fenestration Testing Laboratory, Inc., dated 11/08/11, signed and sealed by Marlin D. Brinson, P. E.

**Jaime D. Gascon, P. E.**
**Product Control Section Supervisor**
**NOA No. 11–1222.05**
**Expiration Date: May 03, 2017**
**Approval Date: May 03, 2012**

## NOTICE OF ACCEPTANCE: EVIDENCE SUBMITTED

**F. STATEMENTS (CONTINUED)**

**4.** Proposal No. **11–0795–R** issued by Product Control, dated August 10, 2011, signed by Manuel Perez, P. E.

**G. OTHERS**

**1.** None.

**Jaime D. Gascon, P. E.**
**Product Control Section Supervisor**
**NOA No. 11–1222.05**
**Expiration Date: May 03, 2017**
**Approval Date: May 03, 2012**

# GENERAL NOTES: 800 SERIES LARGE AND SMALL MISSILE IMPACT RESISTANT SINGLE HUNG WINDOW

| DESIGN PRESSURE RATING | IMPACT RATING |
|---|---|
| +90.0/-110.0 OR +90.0/-130.0 | LARGE & SMALL MISSILE IMPACT RESISTANT |

1) THIS PRODUCT HAS BEEN DESIGNED & TESTED TO COMPLY WITH THE REQUIREMENTS OF THE 2010 FLORIDA BUILDING CODE, INCLUDING THE HIGH VELOCITY HURRICANE ZONE (HVHZ).

2) SHUTTERS ARE NOT REQUIRED WHEN USED IN WIND-BORNE DEBRIS REGIONS.

3) FOR MASONRY APPLICATIONS IN MIAMI-DADE COUNTY, USE ONLY MIAMI-DADE COUNTY APPROVED MASONRY ANCHORS. MATERIALS USED FOR ANCHOR EVALUATIONS WERE SOUTHERN PINE, ASTM C90 CONCRETE MASONRY UNITS AND CONCRETE WITH MIN. KSI PER ANCHOR TYPE, SEE TABLES 2, 4 OR 6.

4) ALL WOOD BUCKS LESS THAN 1-1/2" THICK ARE TO BE CONSIDERED 1X INSTALLATIONS. 1X WOOD BUCKS ARE OPTIONAL IF UNIT IS INSTALLED DIRECTLY TO SUBSTRATE. WOOD BUCKS DEPICTED AS 2X ARE 1-1/2" THICK OR GREATER. 1X AND 2X BUCKS (WHEN USED) SHALL BE DESIGNED TO PROPERLY TRANSFER LOADS TO THE STRUCTURE. WOOD BUCK DESIGN AND INSTALLATION IS THE RESPONSIBILITY OF THE ENGINEER OR ARCHITECT OF RECORD.

5) ANCHOR EMBEDMENT TO BASE MATERIAL SHALL BE BEYOND WALL DRESSING OR STUCCO. USE ANCHORS OF SUFFICIENT LENGTH AS SPECIFIED ON TABLES 2, 4 OR 6.
NARROW JOINT SEALANT IS USED ON ALL FOUR CORNERS OF THE FRAME. OVERALL SEALING/FLASHING STRATEGY FOR WATER RESISTANCE OF INSTALLATION SHALL BE DONE BY OTHERS AND IS BEYOND THE SCOPE OF THESE INSTRUCTIONS.

6) 1/4" MAX. SHIMS ARE REQUIRED AT EACH ANCHOR LOCATION WHERE THE PRODUCT IS NOT FLUSH TO THE SUBSTRATE. USE SHIMS CAPABLE OF TRANSFERRING APPLIED LOADS.

7) DESIGN PRESSURES:
A. NEGATIVE DESIGN LOADS BASED ON STRUCTURAL & CYCLE TESTING AND GLASS PER ASTM E1300-04.
B. POSITIVE DESIGN LOADS BASED ON WATER TEST PRESSURE, STRUCTURAL & CYCLE TESTING AND GLASS PER ASTM E1300-04.

8) THE ANCHORAGE METHODS SHOWN HAVE BEEN DESIGNED TO RESIST THE WINDLOADS CORRESPONDING TO THE REQUIRED DESIGN PRESSURE. THE 33-1/3% STRESS INCREASE HAS NOT BEEN USED IN THE DESIGN OF THIS PRODUCT. THE 1.6 LOAD DURATION FACTOR WAS USED FOR THE EVALUATION OF ANCHORS INTO WOOD. ANCHORS THAT COME INTO CONTACT WITH OTHER DISSIMILAR MATERIALS SHALL MEET THE REQUIREMENTS OF THE FLORIDA BUILDING CODE FOR CORROSION RESISTANCE.

9) REFERENCES: TEST REPORTS FTL-6642; ELCO ULTRACON NOA; ELCO CRETEFLEX NOA; ANSI/AF&PA NDS FOR WOOD CONSTRUCTION AND ADM ALUMINUM DESIGN MANUAL.

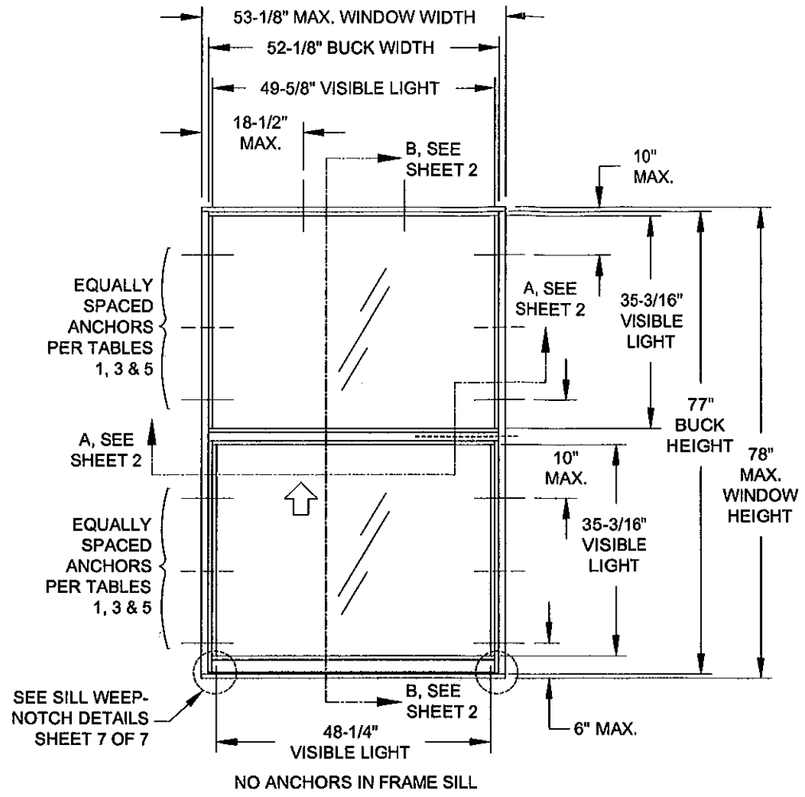


## TYP. EQUAL-LITE FRAME ELEVATION

| Maximum Anchor Spacing, As tested, Equal-lite | |
|---|---|
| Header | 16.125 |
| Above MR | 24.58 |
| Below MR | 13.71 |

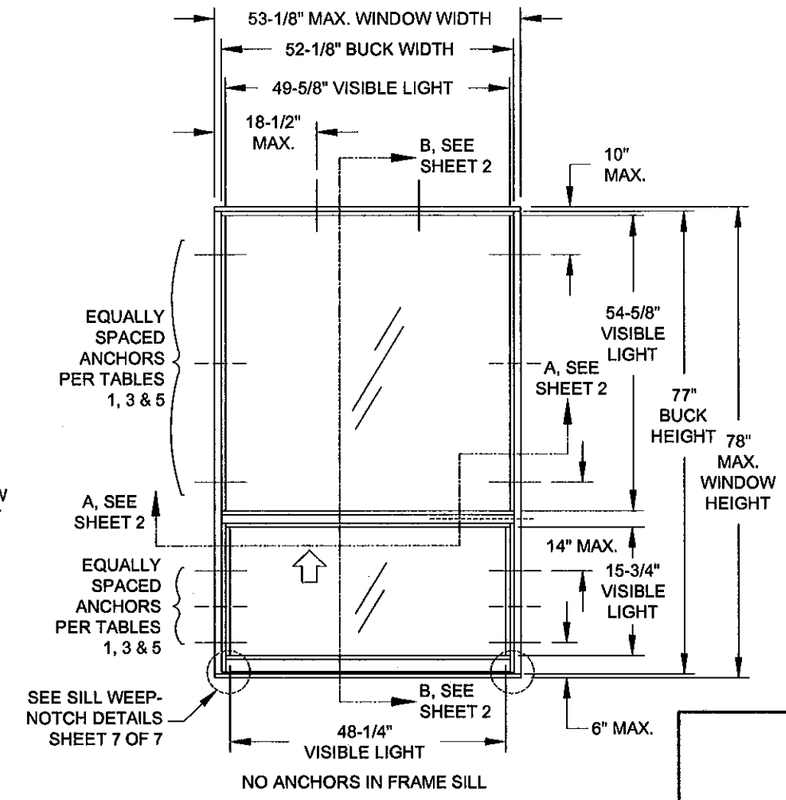


## TYP. PROVIEW / ORIEL FRAME ELEVATION

| Maximum Anchor Spacing, As tested, ProView | |
|---|---|
| Header | 16.125 |
| Above MR | 22.03 |
| Below MR | 13.95 |

| Window Width | Window Height | Sash Height or Configuration[1] | Design Pressure (+) psf | Design Pressure (-) psf |
|---|---|---|---|---|
| Up to 53-1/8" | Up to 50-5/8" | All Sash Heights | +90.0 | -130.0 |
| | Over 50-5/8" and less than 63" | Equal-Lite | +90.0 | -130.0 |
| | | 25" thru 30-15/16" | +90.0 | -130.0 |
| | | 13" thru 24-15/16" | +90.0 | -110.0 |
| | 63" and Over | Equal-Lite | +90.0 | -130.0 |
| | | All Proview / Oriel | +90.0 | -110.0 |

[1] SASH HEIGHT MUST BE MEASURED AS SHOWN IN FIGURE A, SHEETS 3, 4 OR 5.

SHEET INDEX:


GENERAL NOTES..... 1
ELEVATIONS..... 1
DESIGN PRESSURES..... 1
INSTALLATION..... 2
ANCHOR QUANTITIES A..... 3
ANCHOR QUANTITIES B..... 4
ANCHOR QUANTITIES C..... 5
EXTRUSION PROFILES..... 6
PARTS LIST..... 6
GLAZING DETAILS..... 6
ASSEMBLY DETAILS..... 7


ANTHONY LYNN MILLER LICENSE No. 58705 STATE OF FLORIDA PROFESSIONAL ENGINEER
4/9/12
A. LYNN MILLER, P.E.
P.E.# 58705


PGT®
1070 TECHNOLOGY DRIVE
N. VENICE, FL 34275
P.O. BOX 1529
NOKOMIS, FL 34274
CERT. OF AUTH. #29296


Approved as complying with the Florida Building Code
Date 9/6/2012
NOA# 11-1222.04
Miami Dade Product Control
By

| Revised By: | Date: | Revision: |
|---|---|---|
| | | |
| Revised By: | Date: | Revision: |
| | | |

Description: GENERAL NOTES & ELEVATIONS

Drawn By: J ROSOWSKI

Title: SH WINDOW - LARGE MISSILE

Date: 11/11/11

| Series/Model: | Scale: | Sheet: | Drawing No. | Rev: |
|---|---|---|---|---|
| SH-800 | NTS | 1 OF 7 | MD-SH800LM-01 | |

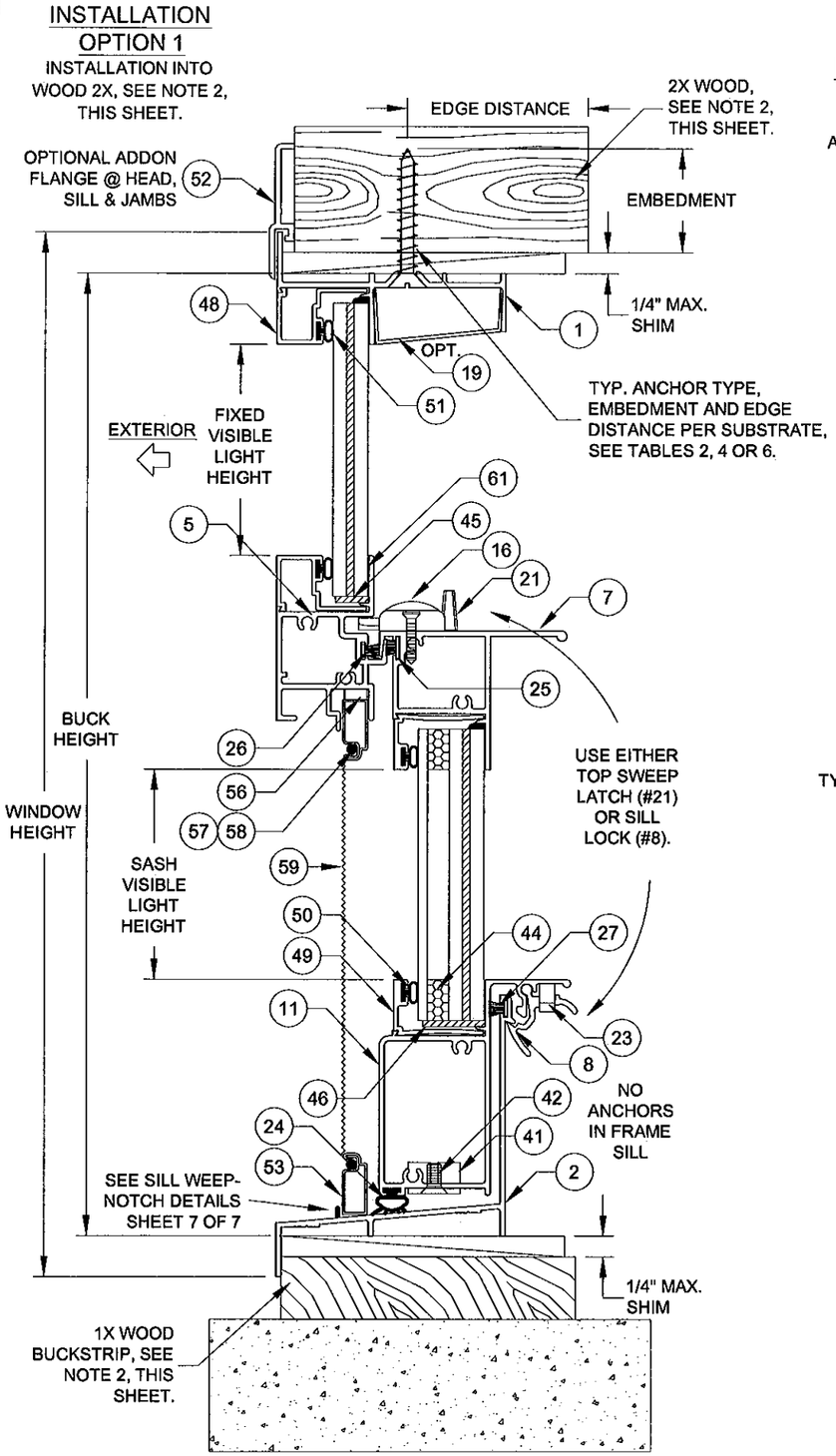


VERTICAL SECTION B-B

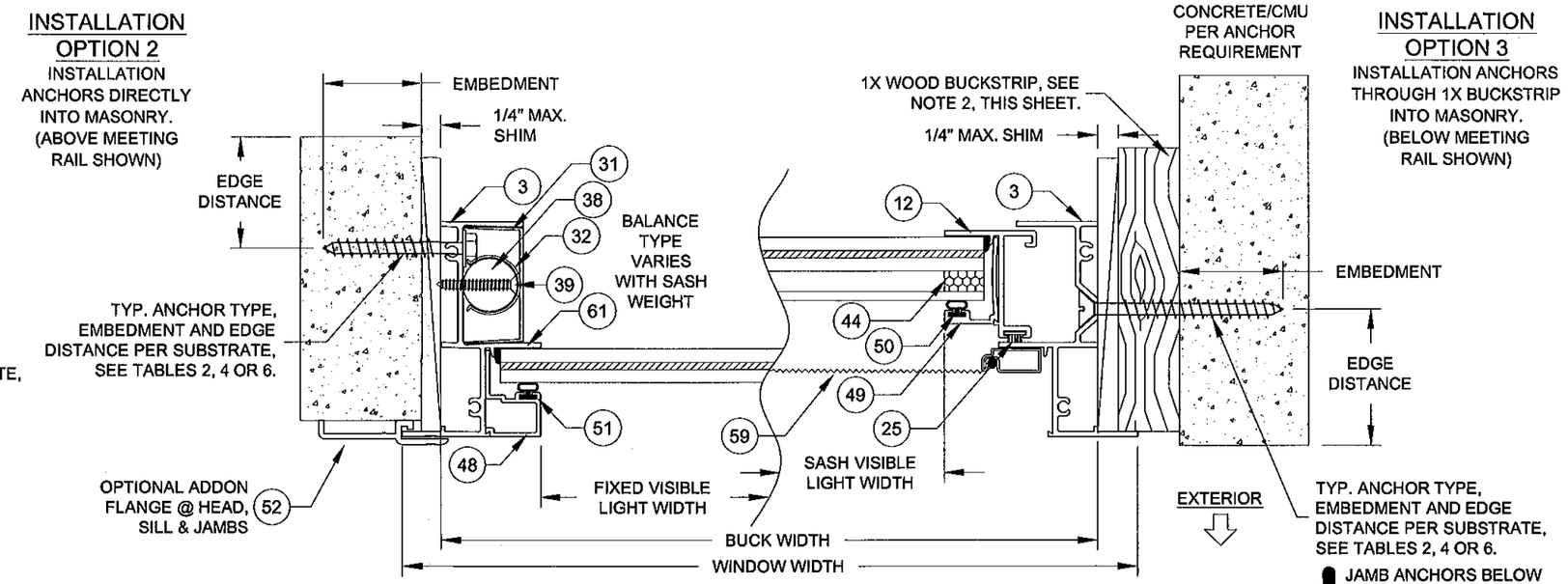


JAMB ANCHORS BELOW THE MEETING RAIL MUST NOT INTERFERE WITH THE OPERATION OF THE SASH.

HORIZONTAL SECTION A-A

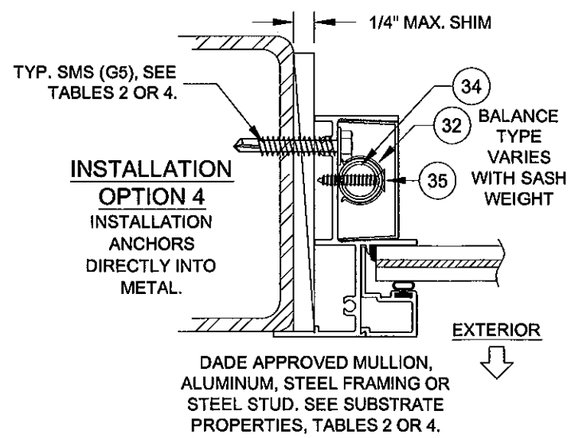


NOTES

1) USE ONLY SUBSTRATE-APPROPRIATE ANCHORS LISTED ON TABLES 2, 4 OR 6. FOLLOW EMBEDMENT AND EDGE DISTANCE LIMITS. ANY INSTALLATION OPTION SHOWN MAY BE USED ON ANY SIDE OF THE WINDOW.

2) ALL WOOD BUCKS LESS THAN 1-1/2" THICK ARE TO BE CONSIDERED 1X INSTALLATIONS. 1X WOOD BUCKS ARE OPTIONAL IF UNIT IS INSTALLED DIRECTLY TO SUBSTRATE. WOOD BUCKS DEPICTED AS 2X ARE 1-1/2" THICK OR GREATER. 1X AND 2X BUCKS (WHEN USED) SHALL BE DESIGNED TO PROPERLY TRANSFER LOADS TO THE STRUCTURE. WOOD BUCK DESIGN AND INSTALLATION IS THE RESPONSIBILITY OF THE ENGINEER OR ARCHITECT OF RECORD.

ANTHONY LYNN MILLER
LICENSE
No. 58705
STATE OF FLORIDA
PROFESSIONAL ENGINEER
A. LYNN MILLER, P.E.
P.E.# 58705

PGT®
1070 TECHNOLOGY DRIVE
N. VENICE, FL 34275
P.O. BOX 1529
NOKOMIS, FL 34274
CERT. OF AUTH. #29296

Approved as complying with the Florida Building Code
Date 9/23/2012
NOA# 11-1122.04
Miami Dade Product Control
By

| Revised By: | Date: | Revision: |
|---|---|---|
| | | |
| Revised By: | Date: | Revision: |
| | | |

| Description: | Drawn By: |
|---|---|
| FLANGE FRAME INSTALLATION DETAILS | J ROSOWSKI |

| Title: | Date: |
|---|---|
| SH WINDOW - LARGE MISSILE | 11/11/11 |

| Series/Model: | Scale: | Sheet: | Drawing No. | Rev: |
|---|---|---|---|---|
| SH-800 | NTS | 2 OF 7 | MD-SH800LM-01 | |

TABLE 1:

## ANCHOR QUANTITIES REQUIRED - Group A Anchors

| Overall Window Height | Sash Height or Height Range | | Overall Window Width 19-1/8" Jamb Above MR | 19-1/8" Jamb Below MR | 19-1/8" Header | 26-1/2" Jamb Above MR | 26-1/2" Jamb Below MR | 26-1/2" Header | 33" Jamb Above MR | 33" Jamb Below MR | 33" Header | 37" Jamb Above MR | 37" Jamb Below MR | 37" Header | 41" Jamb Above MR | 41" Jamb Below MR | 41" Header | 45" Jamb Above MR | 45" Jamb Below MR | 45" Header | 49" Jamb Above MR | 49" Jamb Below MR | 49" Header | 53-1/8" Jamb Above MR | 53-1/8" Jamb Below MR | 53-1/8" Header |
|---|---|---|---|---|---|---|---|---|---|---|---|---|---|---|---|---|---|---|---|---|---|---|---|---|---|---|
| | 24-1/2" | 12-3/4" (Equal-Lite) | 1 | 2 | 1 | 1 | 2 | 1 | 1 | 2 | 1 | 1 | 2 | 1 | 1 | 2 | 2 | 1 | 2 | 2 | 1 | 2 | 2 | 1 | 2 | 2 |
| | 25-1/2" | 13-1/4" (Equal-Lite) | 1 | 2 | 1 | 1 | 2 | 1 | 1 | 2 | 1 | 1 | 2 | 1 | 1 | 2 | 2 | 1 | 2 | 2 | 1 | 2 | 2 | 1 | 2 | 2 |
| | 37" | 19" (Equal-Lite) | 2 | 2 | 1 | 2 | 2 | 1 | 2 | 2 | 2 | 2 | 2 | 2 | 2 | 3 | 2 | 2 | 3 | 2 | 2 | 3 | 2 | 2 | 3 | 2 |
| | 38-3/8" | 19-5/8" (Equal-Lite) | 2 | 2 | 1 | 2 | 2 | 1 | 2 | 2 | 2 | 2 | 2 | 2 | 2 | 3 | 2 | 2 | 3 | 2 | 2 | 3 | 2 | 2 | 3 | 3 |
| | | 19" thru 19-9/16" | 2 | 2 | 1 | 2 | 2 | 1 | 2 | 2 | 2 | 2 | 2 | 2 | 2 | 3 | 2 | 2 | 3 | 2 | 2 | 3 | 2 | 2 | 3 | 3 |
| | | 16" thru 18-15/16" * | 2 | 2 | 1 | 2 | 2 | 1 | 2 | 2 | 2 | 2 | 2 | 2 | 2 | 3 | 2 | 2 | 3 | 2 | 2 | 3 | 3 | 2 | 3 | 3 |
| | | 13" thru 15-15/16" | 2 | 2 | 1 | 2 | 2 | 1 | 2 | 2 | 2 | 2 | 2 | 2 | 2 | 2 | 2 | 2 | 2 | 3 | 2 | 3 | 3 | 3 | 3 | 3 |
| | 45" | 23" (Equal-Lite) | 2 | 2 | 1 | 2 | 2 | 1 | 2 | 2 | 2 | 2 | 3 | 2 | 2 | 3 | 2 | 2 | 3 | 2 | 2 | 3 | 3 | 2 | 4 | 3 |
| | | 22" thru 22-15/16" | 2 | 2 | 1 | 2 | 2 | 1 | 2 | 2 | 2 | 2 | 3 | 2 | 2 | 3 | 2 | 2 | 3 | 2 | 2 | 3 | 3 | 2 | 4 | 3 |
| | | 19" thru 21-15/16" * | 2 | 2 | 1 | 2 | 2 | 1 | 2 | 2 | 2 | 2 | 3 | 2 | 2 | 3 | 2 | 2 | 3 | 3 | 2 | 3 | 3 | 3 | 4 | 3 |
| | | 16" thru 18-15/16" | 2 | 2 | 1 | 2 | 2 | 1 | 2 | 2 | 2 | 2 | 2 | 2 | 2 | 3 | 2 | 3 | 3 | 3 | 3 | 3 | 3 | 3 | 3 | 3 |
| | | 13" thru 15-15/16" | 2 | 2 | 1 | 2 | 2 | 1 | 2 | 2 | 2 | 3 | 2 | 2 | 3 | 2 | 3 | 3 | 2 | 3 | 3 | 3 | 3 | 3 | 3 | 3 |
| | 50-5/8" | 25-3/4" (Equal-Lite) | 2 | 3 | 1 | 2 | 3 | 1 | 2 | 3 | 2 | 2 | 3 | 2 | 2 | 3 | 2 | 2 | 4 | 3 | 2 | 4 | 3 | 2 | 4 | 3 |
| | | 25" thru 25-11/16" | 2 | 3 | 1 | 2 | 3 | 1 | 2 | 3 | 2 | 2 | 3 | 2 | 2 | 3 | 2 | 2 | 4 | 3 | 2 | 4 | 3 | 3 | 4 | 3 |
| | | 22" thru 24-15/16" | 2 | 3 | 1 | 2 | 3 | 1 | 2 | 3 | 2 | 2 | 3 | 2 | 2 | 3 | 2 | 3 | 3 | 3 | 3 | 4 | 3 | 3 | 4 | 3 |
| | | 19" thru 21-15/16" * | 2 | 2 | 1 | 2 | 2 | 1 | 2 | 2 | 2 | 3 | 3 | 2 | 3 | 3 | 2 | 3 | 3 | 3 | 3 | 3 | 3 | 3 | 4 | 3 |
| | | 16" thru 18-15/16" | 2 | 2 | 1 | 2 | 2 | 1 | 3 | 2 | 2 | 3 | 2 | 2 | 3 | 3 | 3 | 3 | 3 | 3 | 3 | 3 | 3 | 4 | 3 | 4 |
| | | 13" thru 15-15/16" | 2 | 2 | 1 | 3 | 2 | 1 | 3 | 2 | 2 | 3 | 2 | 2 | 3 | 2 | 3 | 3 | 2 | 3 | 4 | 3 | 3 | 4 | 3 | 4 |
| | 63" | 32" (Equal-Lite) | 2 | 3 | 1 | 2 | 3 | 1 | 2 | 3 | 2 | 3 | 4 | 2 | 3 | 4 | 2 | 3 | 4 | 3 | 3 | 5 | 3 | 3 | 5 | 3 |
| | | 31" thru 31-15/16" | 2 | 3 | 1 | 2 | 3 | 1 | 2 | 3 | 2 | 3 | 4 | 2 | 3 | 4 | 3 | 3 | 4 | 3 | 3 | 5 | 3 | 3 | 5 | 3 |
| | | 28" thru 30-15/16" | 2 | 3 | 1 | 2 | 3 | 1 | 3 | 3 | 2 | 3 | 3 | 2 | 3 | 4 | 3 | 3 | 4 | 3 | 3 | 4 | 3 | 4 | 5 | 4 |
| | | 25" thru 27-15/16" * | 2 | 3 | 1 | 3 | 3 | 1 | 3 | 3 | 2 | 3 | 3 | 2 | 3 | 4 | 3 | 4 | 4 | 3 | 4 | 4 | 3 | 4 | 4 | 4 |
| | | 22" thru 24-15/16" | 3 | 3 | 1 | 3 | 3 | 1 | 3 | 3 | 2 | 3 | 3 | 2 | 3 | 3 | 2 | 3 | 3 | 3 | 4 | 3 | 3 | 4 | 3 | 3 |
| | | 19" thru 21-15/16" | 3 | 2 | 1 | 3 | 2 | 1 | 3 | 2 | 2 | 3 | 2 | 2 | 3 | 3 | 2 | 4 | 3 | 3 | 4 | 3 | 3 | 4 | 3 | 3 |
| | | 16" thru 18-15/16" | 3 | 2 | 1 | 3 | 2 | 1 | 3 | 2 | 2 | 3 | 2 | 2 | 4 | 2 | 2 | 4 | 2 | 3 | 4 | 3 | 3 | 4 | 3 | 4 |
| | | 13" thru 15-15/16" | 3 | 2 | 1 | 3 | 2 | 1 | 3 | 2 | 2 | 4 | 2 | 2 | 4 | 2 | 2 | 4 | 2 | 3 | 4 | 2 | 3 | 5 | 2 | 4 |
| | 73" | 37" (Equal-Lite) | 2 | 3 | 1 | 2 | 3 | 1 | 3 | 4 | 2 | 3 | 4 | 2 | 3 | 4 | 3 | 3 | 5 | 3 | 4 | 5 | 3 | 4 | 6 | 4 |
| | | 34" thru 36-15/16" | 3 | 3 | 1 | 3 | 3 | 1 | 3 | 3 | 2 | 3 | 4 | 2 | 3 | 4 | 2 | 3 | 4 | 3 | 3 | 5 | 3 | 3 | 5 | 3 |
| | | 31" thru 33-15/16" | 3 | 3 | 1 | 3 | 3 | 1 | 3 | 3 | 2 | 3 | 3 | 2 | 3 | 4 | 2 | 3 | 4 | 3 | 4 | 4 | 3 | 4 | 5 | 3 |
| | | 28" thru 30-15/16" * | 3 | 3 | 1 | 3 | 3 | 1 | 3 | 3 | 2 | 3 | 3 | 2 | 4 | 3 | 2 | 4 | 4 | 3 | 4 | 4 | 3 | 4 | 4 | 3 |
| | | 25" thru 27-15/16" | 3 | 3 | 1 | 3 | 3 | 1 | 3 | 3 | 2 | 4 | 3 | 2 | 4 | 3 | 2 | 4 | 3 | 3 | 4 | 4 | 3 | 4 | 4 | 4 |
| | | 22" thru 24-15/16" | 3 | 3 | 1 | 3 | 3 | 1 | 3 | 3 | 2 | 4 | 3 | 2 | 4 | 3 | 2 | 4 | 3 | 3 | 5 | 3 | 3 | 5 | 3 | 4 |
| | | 19" thru 21-15/16" | 3 | 2 | 1 | 3 | 2 | 1 | 4 | 2 | 2 | 4 | 2 | 2 | 4 | 3 | 2 | 5 | 3 | 3 | 5 | 3 | 3 | 5 | 3 | 4 |
| | | 16" thru 18-15/16" | 3 | 2 | 1 | 3 | 2 | 1 | 4 | 2 | 2 | 4 | 2 | 2 | 5 | 2 | 2 | 5 | 2 | 3 | 5 | 3 | 3 | 5 | 3 | 4 |
| | 78" | 39-1/2" (Equal-Lite) | 2 | 3 | 1 | 3 | 3 | 1 | 3 | 4 | 2 | 3 | 4 | 2 | 3 | 5 | 3 | 4 | 5 | 3 | 4 | 6 | 3 | 4 | 6 | 4 |
| | | 37" thru 39-7/16" | 3 | 3 | 1 | 3 | 3 | 1 | 3 | 3 | 2 | 3 | 4 | 2 | 3 | 4 | 2 | 3 | 4 | 3 | 4 | 5 | 3 | 4 | 5 | 3 |
| | | 34" thru 36-15/16" | 3 | 3 | 1 | 3 | 3 | 1 | 3 | 3 | 2 | 3 | 4 | 2 | 3 | 4 | 2 | 4 | 4 | 3 | 4 | 5 | 3 | 4 | 5 | 3 |
| | | 31" thru 33-15/16" * | 3 | 3 | 1 | 3 | 3 | 1 | 3 | 3 | 2 | 3 | 3 | 2 | 4 | 4 | 2 | 4 | 4 | 3 | 4 | 4 | 3 | 4 | 5 | 4 |
| | | 28" thru 30-15/16" | 3 | 3 | 1 | 3 | 3 | 1 | 3 | 3 | 2 | 4 | 3 | 2 | 4 | 3 | 2 | 4 | 4 | 3 | 4 | 4 | 3 | 5 | 4 | 4 |
| | | 25" thru 27-15/16" | 3 | 3 | 1 | 3 | 3 | 1 | 4 | 3 | 2 | 4 | 3 | 2 | 4 | 3 | 2 | 5 | 3 | 3 | 5 | 4 | 3 | 5 | 4 | 4 |
| | | 22" thru 24-15/16" | 3 | 3 | 1 | 3 | 3 | 1 | 4 | 3 | 2 | 4 | 3 | 2 | 5 | 3 | 2 | 5 | 3 | 3 | 5 | 3 | 3 | 5 | 3 | 4 |
| | | 20" thru 21-15/16" | 3 | 2 | 1 | 3 | 2 | 1 | 4 | 2 | 2 | 4 | 2 | 2 | 5 | 3 | 2 | 5 | 3 | 3 | 5 | 3 | 3 | 6 | 3 | 4 |

* SASH HEIGHT RANGE INCLUDES THE STANDARD PROVIEW / ORIEL CONFIGURATION.

TABLE 2:

| Anchor Group | Anchor | Substrate | Min. Edge Distance | Min. Embedment |
|---|---|---|---|---|
| A | #12, Steel SMS (G5) or #12, 410 SS SMS | P.T. Southern Pine (SG = .55) | 9/16" | 1-3/8" |
| | | 6063-T5 Alum | 3/8" | 1/8" ** |
| | | Steel Stud, Gr. 33 min. | 3/8" | 0.045 (18 Ga) ** |
| | | A36 Steel | 3/8" | 1/8" ** |
| | 3/16" Steel Ultracon | Concrete (min. 2.7 ksi) | 2-1/2" | 1-3/4" |
| | | Grouted-filled Block, (ASTM C90) | 2-1/2" | 2-1/4" |
| | 1/4" Steel Ultracon | Concrete (min. 2.7 ksi) | 1" | 1-3/4" |
| | | Hollow Block, (ASTM C90) | 2-1/2" | 1-1/4" |

** MIMIMUM OF 3 THREADS BEYOND THE METAL SUBSTRATE.

FIGURE A: SASH CROSS SECTION (WITH INSULATED GLASS)

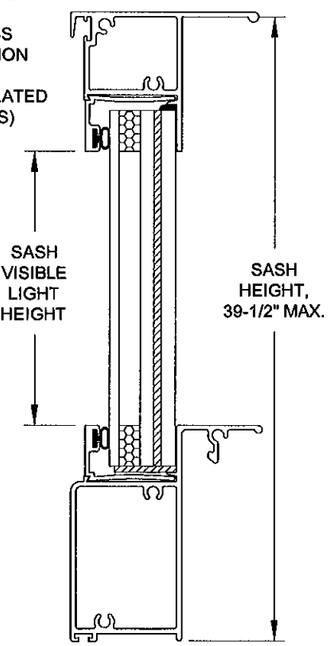


NOTES:

1) FOR BUCK DIMENSIONS, SUBTRACT 1" FROM WINDOW WIDTH OR HEIGHT.

2) "MR" = "MEETING RAIL"

3) FOR OVERALL SASH WIDTH, SUBTRACT 2-9/16" FROM THE WINDOW WIDTH.

4) FOR SIZES NOT SHOWN, ROUND UP TO THE NEXT AVAILABLE WIDTH OR HEIGHT DIMENSION SHOWN ON THE TABLE.

5) SEE SHEET 2 FOR INSTALLATION DETAILS.

SASH VISIBLE LIGHT FORMULAS:
WIDTH = WINDOW WIDTH - 4.875"
HEIGHT = SASH HEIGHT - 4.293"

FIXED VISIBLE LIGHT FORMULAS:
WIDTH = WINDOW WIDTH - 3.5"
HEIGHT = WINDOW HEIGHT - SASH HEIGHT - 3.336"

Approved as complying with the Florida Building Code
Date 05/03/2012
NOA# 11-1222.04
Miami Dade Product Control
By

ANTHONY LYNN MILLER
LICENSE
No. 58705
4/9/12
STATE OF FLORIDA
PROFESSIONAL ENGINEER

A. LYNN MILLER, P.E.
P.E.# 58705


PGT®
1070 TECHNOLOGY DRIVE
N. VENICE, FL 34275
P.O. BOX 1529
NOKOMIS, FL 34274
CERT. OF AUTH. #29296


| Revised By: | Date: | Revision: |
|---|---|---|
| Revised By: | Date: | Revision: |

| Description: | Drawn By: |
|---|---|
| ANCHOR QUANTITIES A | J ROSOWSKI |

| Title: | Date: |
|---|---|
| SH WINDOW - LARGE MISSILE | 11/11/11 |

| Series/Model: | Scale: | Sheet: | Drawing No. | Rev: |
|---|---|---|---|---|
| SH-800 | NTS | 3 OF 7 | MD-SH800LM-01 | |

TABLE 3:

## ANCHOR QUANTITIES REQUIRED - Group B Anchors

| Overall Window Height | Sash Height or Height Range | | Overall Window Width: 19-1/8" Jamb Above MR | 19-1/8" Jamb Below MR | 19-1/8" Header | 26-1/2" Jamb Above MR | 26-1/2" Jamb Below MR | 26-1/2" Header | 33" Jamb Above MR | 33" Jamb Below MR | 33" Header | 37" Jamb Above MR | 37" Jamb Below MR | 37" Header | 41" Jamb Above MR | 41" Jamb Below MR | 41" Header | 45" Jamb Above MR | 45" Jamb Below MR | 45" Header | 49" Jamb Above MR | 49" Jamb Below MR | 49" Header | 53-1/8" Jamb Above MR | 53-1/8" Jamb Below MR | 53-1/8" Header |
|---|---|---|---|---|---|---|---|---|---|---|---|---|---|---|---|---|---|---|---|---|---|---|---|---|---|---|
| 24-1/2" | | 12-3/4" (Equal-Lite) | 1 | 2 | 1 | 1 | 2 | 1 | 1 | 2 | 1 | 1 | 2 | 1 | 1 | 2 | 2 | 1 | 2 | 2 | 1 | 2 | 2 | 1 | 2 | 2 |
| 25-1/2" | | 13-1/4" (Equal-Lite) | 1 | 2 | 1 | 1 | 2 | 1 | 1 | 2 | 1 | 1 | 2 | 1 | 1 | 2 | 2 | 1 | 2 | 2 | 1 | 2 | 2 | 1 | 2 | 2 |
| 37" | | 19" (Equal-Lite) | 2 | 2 | 1 | 2 | 2 | 1 | 2 | 2 | 1 | 2 | 2 | 1 | 2 | 2 | 2 | 2 | 2 | 2 | 2 | 2 | 2 | 2 | 3 | 2 |
| 38-3/8" | | 19-5/8" (Equal-Lite) | 2 | 2 | 1 | 2 | 2 | 1 | 2 | 2 | 1 | 2 | 2 | 1 | 2 | 2 | 2 | 2 | 2 | 2 | 2 | 2 | 2 | 2 | 3 | 2 |
| | | 19" thru 19-9/16" | 2 | 2 | 1 | 2 | 2 | 1 | 2 | 2 | 1 | 2 | 2 | 1 | 2 | 2 | 2 | 2 | 2 | 2 | 2 | 2 | 2 | 2 | 3 | 2 |
| | | 16" thru 18-15/16" * | 2 | 2 | 1 | 2 | 2 | 1 | 2 | 2 | 1 | 2 | 2 | 2 | 2 | 2 | 2 | 2 | 2 | 2 | 2 | 2 | 2 | 2 | 3 | 2 |
| | | 13" thru 15-15/16" | 2 | 2 | 1 | 2 | 2 | 1 | 2 | 2 | 1 | 2 | 2 | 2 | 2 | 2 | 2 | 2 | 2 | 2 | 2 | 2 | 2 | 2 | 2 | 2 |
| 45" | | 23" (Equal-Lite) | 2 | 2 | 1 | 2 | 2 | 1 | 2 | 2 | 1 | 2 | 2 | 2 | 2 | 2 | 2 | 2 | 3 | 2 | 2 | 3 | 2 | 2 | 3 | 2 |
| | | 22" thru 22-15/16" | 2 | 2 | 1 | 2 | 2 | 1 | 2 | 2 | 1 | 2 | 2 | 2 | 2 | 2 | 2 | 2 | 3 | 2 | 2 | 3 | 2 | 2 | 3 | 2 |
| | | 19" thru 21-15/16" * | 2 | 2 | 1 | 2 | 2 | 1 | 2 | 2 | 1 | 2 | 2 | 2 | 2 | 2 | 2 | 2 | 3 | 2 | 2 | 3 | 2 | 2 | 3 | 2 |
| | | 16" thru 18-15/16" | 2 | 2 | 1 | 2 | 2 | 1 | 2 | 2 | 1 | 2 | 2 | 2 | 2 | 2 | 2 | 2 | 2 | 2 | 2 | 2 | 2 | 2 | 3 | 3 |
| | | 13" thru 15-15/16" | 2 | 2 | 1 | 2 | 2 | 1 | 2 | 2 | 1 | 2 | 2 | 2 | 2 | 2 | 2 | 2 | 2 | 2 | 2 | 2 | 2 | 3 | 2 | 3 |
| 50-5/8" | | 25-3/4" (Equal-Lite) | 2 | 3 | 1 | 2 | 3 | 1 | 2 | 3 | 1 | 2 | 3 | 2 | 2 | 3 | 2 | 2 | 3 | 2 | 2 | 3 | 2 | 2 | 3 | 2 |
| | | 25" thru 25-11/16" | 2 | 3 | 1 | 2 | 3 | 1 | 2 | 3 | 1 | 2 | 3 | 2 | 2 | 3 | 2 | 2 | 3 | 2 | 2 | 3 | 2 | 2 | 3 | 2 |
| | | 22" thru 24-15/16" | 2 | 3 | 1 | 2 | 3 | 1 | 2 | 3 | 1 | 2 | 3 | 2 | 2 | 3 | 2 | 2 | 3 | 2 | 2 | 3 | 2 | 2 | 3 | 3 |
| | | 19" thru 21-15/16" * | 2 | 2 | 1 | 2 | 2 | 1 | 2 | 2 | 1 | 2 | 2 | 2 | 2 | 2 | 2 | 2 | 3 | 2 | 2 | 3 | 2 | 3 | 3 | 3 |
| | | 16" thru 18-15/16" | 2 | 2 | 1 | 2 | 2 | 1 | 2 | 2 | 1 | 2 | 2 | 2 | 2 | 2 | 2 | 3 | 2 | 2 | 3 | 2 | 3 | 3 | 3 | 3 |
| | | 13" thru 15-15/16" | 2 | 2 | 1 | 2 | 2 | 1 | 2 | 2 | 1 | 3 | 2 | 2 | 3 | 2 | 2 | 3 | 2 | 2 | 3 | 2 | 3 | 3 | 2 | 3 |
| 63" | | 32" (Equal-Lite) | 2 | 3 | 1 | 2 | 3 | 1 | 2 | 3 | 1 | 2 | 3 | 2 | 2 | 3 | 2 | 2 | 3 | 2 | 2 | 4 | 2 | 3 | 4 | 3 |
| | | 31" thru 31-15/16" | 2 | 3 | 1 | 2 | 3 | 1 | 2 | 3 | 1 | 2 | 3 | 2 | 2 | 3 | 2 | 2 | 3 | 2 | 2 | 4 | 2 | 3 | 4 | 3 |
| | | 28" thru 30-15/16" | 2 | 3 | 1 | 2 | 3 | 1 | 2 | 3 | 1 | 2 | 3 | 2 | 2 | 3 | 2 | 3 | 3 | 2 | 3 | 4 | 3 | 3 | 4 | 3 |
| | | 25" thru 27-15/16" * | 2 | 3 | 1 | 2 | 3 | 1 | 2 | 3 | 1 | 3 | 3 | 2 | 3 | 3 | 2 | 3 | 3 | 2 | 3 | 3 | 3 | 3 | 4 | 3 |
| | | 22" thru 24-15/16" | 3 | 3 | 1 | 3 | 3 | 1 | 3 | 3 | 1 | 3 | 3 | 2 | 3 | 3 | 2 | 3 | 3 | 2 | 3 | 3 | 2 | 3 | 3 | 3 |
| | | 19" thru 21-15/16" | 3 | 2 | 1 | 3 | 2 | 1 | 3 | 2 | 1 | 3 | 2 | 2 | 3 | 2 | 2 | 3 | 2 | 2 | 3 | 2 | 2 | 3 | 3 | 3 |
| | | 16" thru 18-15/16" | 3 | 2 | 1 | 3 | 2 | 1 | 3 | 2 | 1 | 3 | 2 | 2 | 3 | 2 | 2 | 3 | 2 | 2 | 3 | 2 | 2 | 3 | 2 | 3 |
| | | 13" thru 15-15/16" | 3 | 2 | 1 | 3 | 2 | 1 | 3 | 2 | 1 | 3 | 2 | 2 | 3 | 2 | 2 | 3 | 2 | 2 | 4 | 2 | 2 | 4 | 2 | 3 |
| 73" | | 37" (Equal-Lite) | 2 | 3 | 1 | 2 | 3 | 1 | 2 | 3 | 1 | 2 | 3 | 2 | 3 | 4 | 2 | 3 | 4 | 2 | 3 | 4 | 3 | 3 | 4 | 3 |
| | | 34" thru 36-15/16" | 3 | 3 | 1 | 3 | 3 | 1 | 3 | 3 | 1 | 3 | 3 | 2 | 3 | 3 | 2 | 3 | 3 | 2 | 3 | 4 | 2 | 3 | 4 | 3 |
| | | 31" thru 33-15/16" | 3 | 3 | 1 | 3 | 3 | 1 | 3 | 3 | 1 | 3 | 3 | 2 | 3 | 3 | 2 | 3 | 3 | 2 | 3 | 3 | 2 | 3 | 4 | 3 |
| | | 28" thru 30-15/16" * | 3 | 3 | 1 | 3 | 3 | 1 | 3 | 3 | 1 | 3 | 3 | 2 | 3 | 3 | 2 | 3 | 3 | 2 | 3 | 3 | 2 | 3 | 3 | 3 |
| | | 25" thru 27-15/16" | 3 | 3 | 1 | 3 | 3 | 1 | 3 | 3 | 1 | 3 | 3 | 2 | 3 | 3 | 2 | 3 | 3 | 2 | 3 | 3 | 2 | 4 | 3 | 3 |
| | | 22" thru 24-15/16" | 3 | 3 | 1 | 3 | 3 | 1 | 3 | 3 | 1 | 3 | 3 | 2 | 3 | 3 | 2 | 3 | 3 | 2 | 4 | 3 | 2 | 4 | 3 | 3 |
| | | 19" thru 21-15/16" | 3 | 2 | 1 | 3 | 2 | 1 | 3 | 2 | 1 | 3 | 2 | 2 | 3 | 2 | 2 | 4 | 2 | 2 | 4 | 2 | 2 | 4 | 3 | 3 |
| | | 16" thru 18-15/16" | 3 | 2 | 1 | 3 | 2 | 1 | 3 | 2 | 1 | 3 | 2 | 2 | 4 | 2 | 2 | 4 | 2 | 2 | 4 | 2 | 2 | 4 | 2 | 3 |
| 78" | | 39-1/2" (Equal-Lite) | 2 | 3 | 1 | 2 | 3 | 1 | 2 | 3 | 1 | 3 | 3 | 2 | 3 | 4 | 2 | 3 | 4 | 2 | 3 | 4 | 3 | 3 | 5 | 3 |
| | | 37" thru 39-7/16" | 3 | 3 | 1 | 3 | 3 | 1 | 3 | 3 | 1 | 3 | 3 | 2 | 3 | 3 | 2 | 3 | 4 | 2 | 3 | 4 | 2 | 3 | 4 | 3 |
| | | 34" thru 36-15/16" | 3 | 3 | 1 | 3 | 3 | 1 | 3 | 3 | 1 | 3 | 3 | 2 | 3 | 3 | 2 | 3 | 3 | 2 | 3 | 4 | 2 | 3 | 4 | 3 |
| | | 31" thru 33-15/16" * | 3 | 3 | 1 | 3 | 3 | 1 | 3 | 3 | 1 | 3 | 3 | 2 | 3 | 3 | 2 | 3 | 3 | 2 | 3 | 3 | 2 | 3 | 4 | 3 |
| | | 28" thru 30-15/16" | 3 | 3 | 1 | 3 | 3 | 1 | 3 | 3 | 1 | 3 | 3 | 2 | 3 | 3 | 2 | 3 | 3 | 2 | 4 | 3 | 2 | 4 | 3 | 3 |
| | | 25" thru 27-15/16" | 3 | 3 | 1 | 3 | 3 | 1 | 3 | 3 | 1 | 3 | 3 | 2 | 3 | 3 | 2 | 4 | 3 | 2 | 4 | 3 | 2 | 4 | 3 | 3 |
| | | 22" thru 24-15/16" | 3 | 3 | 1 | 3 | 3 | 1 | 3 | 3 | 1 | 3 | 3 | 2 | 4 | 3 | 2 | 4 | 3 | 2 | 4 | 3 | 2 | 4 | 3 | 3 |
| | | 20" thru 21-15/16" | 3 | 2 | 1 | 3 | 2 | 1 | 3 | 2 | 1 | 3 | 2 | 2 | 4 | 2 | 2 | 4 | 2 | 2 | 4 | 2 | 2 | 4 | 3 | 3 |

* SASH HEIGHT RANGE INCLUDES THE STANDARD PROVIEW / ORIEL CONFIGURATION.

TABLE 4:

| Anchor Group | Anchor | Substrate | Min. Edge Distance | Min. Embedment |
|---|---|---|---|---|
| B | #14, Steel SMS (G5) or #14, 410 SS SMS | P.T. Southern Pine (SG = .55) | 9/16" | 1-3/8" |
| | | 6063-T5 Alum | 3/8" | 1/8" ** |
| | | Steel Stud, Gr. 33 min. | 3/8" | 0.045 (18 Ga) ** |
| | | A36 Steel | 3/8" | 1/8" ** |
| | 1/4" CreteFlex | P.T. Southern Pine (SG = .55) | 1" | 1-3/4" |
| | 5/16" Steel Ultracon | Hollow Block, (ASTM C90) | 3-1/8" | 1-1/4" |

** MIMIMUM OF 3 THREADS BEYOND THE METAL SUBSTRATE.

FIGURE A: SASH CROSS SECTION (WITH INSULATED GLASS)

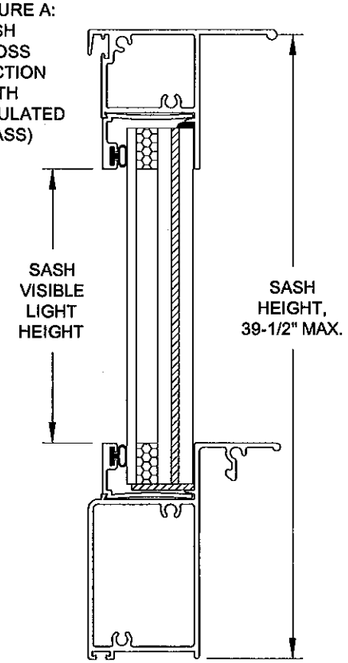


NOTES:

1) FOR BUCK DIMENSIONS, SUBTRACT 1" FROM WINDOW WIDTH OR HEIGHT.

2) "MR" = "MEETING RAIL"

3) FOR OVERALL SASH WIDTH, SUBTRACT 2-9/16" FROM THE WINDOW WIDTH.

4) FOR SIZES NOT SHOWN, ROUND UP TO THE NEXT AVAILABLE WIDTH OR HEIGHT DIMENSION SHOWN ON THE TABLE.

5) SEE SHEET 2 FOR INSTALLATION DETAILS.

SASH VISIBLE LIGHT FORMULAS:
WIDTH = WINDOW WIDTH - 4.875"
HEIGHT = SASH HEIGHT - 4.293"

FIXED VISIBLE LIGHT FORMULAS:
WIDTH = WINDOW WIDTH - 3.5"
HEIGHT = WINDOW HEIGHT - SASH HEIGHT - 3.336"

Approved as complying with the Florida Building Code
Date 05/03/2012
NOA# 11-1222.04
Miami-Dade Product Control
By

ANTHONY LYNN MILLER
LICENSE
No. 58705
STATE OF FLORIDA
PROFESSIONAL ENGINEER
4/9/12

A. LYNN MILLER, P.E.
P.E.# 58705


PGT®
1070 TECHNOLOGY DRIVE
N. VENICE, FL 34275
P.O. BOX 1529
NOKOMIS, FL 34274
CERT. OF AUTH. #29296


| Revised By: | Date: | Revision: |
|---|---|---|
| | | |
| Revised By: | Date: | Revision: |
| | | |

Description: ANCHOR QUANTITIES B
Drawn By: J ROSOWSKI
Title: SH WINDOW - LARGE MISSILE
Date: 11/11/11
Series/Model: SH-800
Scale: NTS
Sheet: 4 OF 7
Drawing No. MD-SH800LM-01
Rev:

TABLE 5:

## ANCHOR QUANTITIES REQUIRED - Group C Anchors

| Overall Window Height | Sash Height or Height Range | | Overall Window Width: 19-1/8" Jamb Above MR | 19-1/8" Jamb Below MR | 19-1/8" Header | 26-1/2" Jamb Above MR | 26-1/2" Jamb Below MR | 26-1/2" Header | 33" Jamb Above MR | 33" Jamb Below MR | 33" Header | 37" Jamb Above MR | 37" Jamb Below MR | 37" Header | 41" Jamb Above MR | 41" Jamb Below MR | 41" Header | 45" Jamb Above MR | 45" Jamb Below MR | 45" Header | 49" Jamb Above MR | 49" Jamb Below MR | 49" Header | 53-1/8" Jamb Above MR | 53-1/8" Jamb Below MR | 53-1/8" Header |
|---|---|---|---|---|---|---|---|---|---|---|---|---|---|---|---|---|---|---|---|---|---|---|---|---|---|---|
| 24-1/2" | 12-3/4" (Equal-Lite) | | 1 | 2 | 1 | 1 | 2 | 1 | 1 | 2 | 1 | 1 | 2 | 1 | 1 | 2 | 2 | 1 | 2 | 2 | 1 | 2 | 2 | 1 | 2 | 2 |
| 25-1/2" | 13-1/4" (Equal-Lite) | | 1 | 2 | 1 | 1 | 2 | 1 | 1 | 2 | 1 | 1 | 2 | 1 | 1 | 2 | 2 | 1 | 2 | 2 | 1 | 2 | 2 | 1 | 2 | 2 |
| 37" | 19" (Equal-Lite) | | 2 | 2 | 1 | 2 | 2 | 1 | 2 | 2 | 1 | 2 | 2 | 1 | 2 | 2 | 2 | 2 | 2 | 2 | 2 | 2 | 2 | 2 | 2 | 2 |
| 38-3/8" | 19-5/8" (Equal-Lite) | | 2 | 2 | 1 | 2 | 2 | 1 | 2 | 2 | 1 | 2 | 2 | 1 | 2 | 2 | 2 | 2 | 2 | 2 | 2 | 2 | 2 | 2 | 2 | 2 |
| | 19" thru 19-9/16" | | 2 | 2 | 1 | 2 | 2 | 1 | 2 | 2 | 1 | 2 | 2 | 1 | 2 | 2 | 2 | 2 | 2 | 2 | 2 | 2 | 2 | 2 | 2 | 2 |
| | 16" thru 18-15/16" * | | 2 | 2 | 1 | 2 | 2 | 1 | 2 | 2 | 1 | 2 | 2 | 1 | 2 | 2 | 2 | 2 | 2 | 2 | 2 | 2 | 2 | 2 | 2 | 2 |
| | 13" thru 15-15/16" | | 2 | 2 | 1 | 2 | 2 | 1 | 2 | 2 | 1 | 2 | 2 | 1 | 2 | 2 | 2 | 2 | 2 | 2 | 2 | 2 | 2 | 2 | 2 | 2 |
| 45" | 23" (Equal-Lite) | | 2 | 2 | 1 | 2 | 2 | 1 | 2 | 2 | 1 | 2 | 2 | 1 | 2 | 2 | 2 | 2 | 2 | 2 | 2 | 2 | 2 | 2 | 2 | 2 |
| | 22" thru 22-15/16" | | 2 | 2 | 1 | 2 | 2 | 1 | 2 | 2 | 1 | 2 | 2 | 1 | 2 | 2 | 2 | 2 | 2 | 2 | 2 | 2 | 2 | 2 | 2 | 2 |
| | 19" thru 21-15/16" * | | 2 | 2 | 1 | 2 | 2 | 1 | 2 | 2 | 1 | 2 | 2 | 1 | 2 | 2 | 2 | 2 | 2 | 2 | 2 | 2 | 2 | 2 | 2 | 2 |
| | 16" thru 18-15/16" | | 2 | 2 | 1 | 2 | 2 | 1 | 2 | 2 | 1 | 2 | 2 | 1 | 2 | 2 | 2 | 2 | 2 | 2 | 2 | 2 | 2 | 2 | 2 | 2 |
| | 13" thru 15-15/16" | | 2 | 2 | 1 | 2 | 2 | 1 | 2 | 2 | 1 | 2 | 2 | 1 | 2 | 2 | 2 | 2 | 2 | 2 | 2 | 2 | 2 | 2 | 2 | 2 |
| 50-5/8" | 25-3/4" (Equal-Lite) | | 2 | 3 | 1 | 2 | 3 | 1 | 2 | 3 | 1 | 2 | 3 | 1 | 2 | 3 | 2 | 2 | 3 | 2 | 2 | 3 | 2 | 2 | 3 | 2 |
| | 25" thru 25-11/16" | | 2 | 3 | 1 | 2 | 3 | 1 | 2 | 3 | 1 | 2 | 3 | 1 | 2 | 3 | 2 | 2 | 3 | 2 | 2 | 3 | 2 | 2 | 3 | 2 |
| | 22" thru 24-15/16" | | 2 | 3 | 1 | 2 | 3 | 1 | 2 | 3 | 1 | 2 | 3 | 1 | 2 | 3 | 2 | 2 | 3 | 2 | 2 | 3 | 2 | 2 | 3 | 2 |
| | 19" thru 21-15/16" * | | 2 | 2 | 1 | 2 | 2 | 1 | 2 | 2 | 1 | 2 | 2 | 1 | 2 | 2 | 2 | 2 | 2 | 2 | 2 | 2 | 2 | 2 | 2 | 2 |
| | 16" thru 18-15/16" | | 2 | 2 | 1 | 2 | 2 | 1 | 2 | 2 | 1 | 2 | 2 | 1 | 2 | 2 | 2 | 2 | 2 | 2 | 2 | 2 | 2 | 2 | 2 | 2 |
| | 13" thru 15-15/16" | | 2 | 2 | 1 | 2 | 2 | 1 | 2 | 2 | 1 | 2 | 2 | 1 | 2 | 2 | 2 | 2 | 2 | 2 | 2 | 2 | 2 | 2 | 2 | 2 |
| 63" | 32" (Equal-Lite) | | 2 | 3 | 1 | 2 | 3 | 1 | 2 | 3 | 1 | 2 | 3 | 1 | 2 | 3 | 2 | 2 | 3 | 2 | 2 | 3 | 2 | 2 | 3 | 2 |
| | 31" thru 31-15/16" | | 2 | 3 | 1 | 2 | 3 | 1 | 2 | 3 | 1 | 2 | 3 | 1 | 2 | 3 | 2 | 2 | 3 | 2 | 2 | 3 | 2 | 2 | 3 | 2 |
| | 28" thru 30-15/16" | | 2 | 3 | 1 | 2 | 3 | 1 | 2 | 3 | 1 | 2 | 3 | 1 | 2 | 3 | 2 | 2 | 3 | 2 | 2 | 3 | 2 | 2 | 3 | 2 |
| | 25" thru 27-15/16" * | | 2 | 3 | 1 | 2 | 3 | 1 | 2 | 3 | 1 | 2 | 3 | 1 | 2 | 3 | 2 | 2 | 3 | 2 | 2 | 3 | 2 | 2 | 3 | 2 |
| | 22" thru 24-15/16" | | 3 | 3 | 1 | 3 | 3 | 1 | 3 | 3 | 1 | 3 | 3 | 1 | 3 | 3 | 2 | 3 | 3 | 2 | 3 | 3 | 2 | 3 | 3 | 2 |
| | 19" thru 21-15/16" | | 3 | 2 | 1 | 3 | 2 | 1 | 3 | 2 | 1 | 3 | 2 | 1 | 3 | 2 | 2 | 3 | 2 | 2 | 3 | 2 | 2 | 3 | 2 | 2 |
| | 16" thru 18-15/16" | | 3 | 2 | 1 | 3 | 2 | 1 | 3 | 2 | 1 | 3 | 2 | 1 | 3 | 2 | 2 | 3 | 2 | 2 | 3 | 2 | 2 | 3 | 2 | 2 |
| | 13" thru 15-15/16" | | 3 | 2 | 1 | 3 | 2 | 1 | 3 | 2 | 1 | 3 | 2 | 1 | 3 | 2 | 2 | 3 | 2 | 2 | 3 | 2 | 2 | 3 | 2 | 2 |
| 73" | 37" (Equal-Lite) | | 2 | 3 | 1 | 2 | 3 | 1 | 2 | 3 | 1 | 2 | 3 | 1 | 2 | 3 | 2 | 2 | 3 | 2 | 2 | 3 | 2 | 2 | 3 | 2 |
| | 34" thru 36-15/16" | | 3 | 3 | 1 | 3 | 3 | 1 | 3 | 3 | 1 | 3 | 3 | 1 | 3 | 3 | 2 | 3 | 3 | 2 | 3 | 3 | 2 | 3 | 3 | 2 |
| | 31" thru 33-15/16" | | 3 | 3 | 1 | 3 | 3 | 1 | 3 | 3 | 1 | 3 | 3 | 1 | 3 | 3 | 2 | 3 | 3 | 2 | 3 | 3 | 2 | 3 | 3 | 2 |
| | 28" thru 30-15/16" * | | 3 | 3 | 1 | 3 | 3 | 1 | 3 | 3 | 1 | 3 | 3 | 1 | 3 | 3 | 2 | 3 | 3 | 2 | 3 | 3 | 2 | 3 | 3 | 2 |
| | 25" thru 27-15/16" | | 3 | 3 | 1 | 3 | 3 | 1 | 3 | 3 | 1 | 3 | 3 | 1 | 3 | 3 | 2 | 3 | 3 | 2 | 3 | 3 | 2 | 3 | 3 | 2 |
| | 22" thru 24-15/16" | | 3 | 3 | 1 | 3 | 3 | 1 | 3 | 3 | 1 | 3 | 3 | 1 | 3 | 3 | 2 | 3 | 3 | 2 | 3 | 3 | 2 | 3 | 3 | 2 |
| | 19" thru 21-15/16" | | 3 | 2 | 1 | 3 | 2 | 1 | 3 | 2 | 1 | 3 | 2 | 1 | 3 | 2 | 2 | 3 | 2 | 2 | 3 | 2 | 2 | 3 | 2 | 2 |
| | 16" thru 18-15/16" | | 3 | 2 | 1 | 3 | 2 | 1 | 3 | 2 | 1 | 3 | 2 | 1 | 3 | 2 | 2 | 3 | 2 | 2 | 3 | 2 | 2 | 3 | 2 | 2 |
| 78" | 39-1/2" (Equal-Lite) | | 2 | 3 | 1 | 2 | 3 | 1 | 2 | 3 | 1 | 2 | 3 | 1 | 2 | 3 | 2 | 2 | 3 | 2 | 2 | 3 | 2 | 2 | 4 | 2 |
| | 37" thru 39-7/16" | | 3 | 3 | 1 | 3 | 3 | 1 | 3 | 3 | 1 | 3 | 3 | 1 | 3 | 3 | 2 | 3 | 3 | 2 | 3 | 3 | 2 | 3 | 3 | 2 |
| | 34" thru 36-15/16" | | 3 | 3 | 1 | 3 | 3 | 1 | 3 | 3 | 1 | 3 | 3 | 1 | 3 | 3 | 2 | 3 | 3 | 2 | 3 | 3 | 2 | 3 | 3 | 2 |
| | 31" thru 33-15/16" * | | 3 | 3 | 1 | 3 | 3 | 1 | 3 | 3 | 1 | 3 | 3 | 1 | 3 | 3 | 2 | 3 | 3 | 2 | 3 | 3 | 2 | 3 | 3 | 2 |
| | 28" thru 30-15/16" | | 3 | 3 | 1 | 3 | 3 | 1 | 3 | 3 | 1 | 3 | 3 | 1 | 3 | 3 | 2 | 3 | 3 | 2 | 3 | 3 | 2 | 3 | 3 | 2 |
| | 25" thru 27-15/16" | | 3 | 3 | 1 | 3 | 3 | 1 | 3 | 3 | 1 | 3 | 3 | 1 | 3 | 3 | 2 | 3 | 3 | 2 | 3 | 3 | 2 | 3 | 3 | 2 |
| | 22" thru 24-15/16" | | 3 | 3 | 1 | 3 | 3 | 1 | 3 | 3 | 1 | 3 | 3 | 1 | 3 | 3 | 2 | 3 | 3 | 2 | 3 | 3 | 2 | 3 | 3 | 2 |
| | 20" thru 21-15/16" | | 3 | 2 | 1 | 3 | 2 | 1 | 3 | 2 | 1 | 3 | 2 | 1 | 3 | 2 | 2 | 3 | 2 | 2 | 3 | 2 | 2 | 3 | 2 | 2 |

* SASH HEIGHT RANGE INCLUDES THE STANDARD PROVIEW / ORIEL CONFIGURATION.

TABLE 6:

| Anchor Group | Anchor | Substrate | Min. Edge Distance | Min. Embedment |
|---|---|---|---|---|
| C | 1/4" Steel Ultracon | Concrete (min. 2.7 ksi) | 2-1/2" | 1-3/8" |
| | 1/4" CreteFlex | Concrete (min. 3.35 ksi) | 1" | 1-3/4" |
| | | Hollow Block, (ASTM C90) | 1-3/4" | 1-1/4" |
| | 5/16" Steel Ultracon | Concrete (min. 3.5 ksi) | 2-3/16" | 1-3/4" |
| | | Grouted-filled Block, (ASTM C90) | 2-1/2" | 1-3/4" |
| | | Hollow Block, (ASTM C90) | 3-1/8" | 1-1/4" |

FIGURE A: SASH CROSS SECTION (WITH INSULATED GLASS)

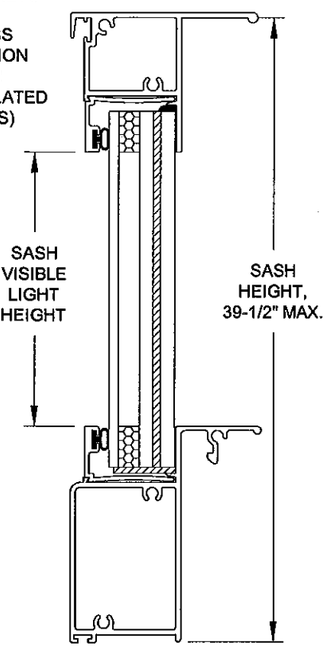


NOTES:

1) FOR BUCK DIMENSIONS, SUBTRACT 1" FROM WINDOW WIDTH OR HEIGHT.

2) "MR" = "MEETING RAIL"

3) FOR OVERALL SASH WIDTH, SUBTRACT 2-9/16" FROM THE WINDOW WIDTH.

4) FOR SIZES NOT SHOWN, ROUND UP TO THE NEXT AVAILABLE WIDTH OR HEIGHT DIMENSION SHOWN ON THE TABLE.

5) SEE SHEET 2 FOR INSTALLATION DETAILS.

SASH VISIBLE LIGHT FORMULAS:
WIDTH = WINDOW WIDTH - 4.875"
HEIGHT = SASH HEIGHT - 4.293"

FIXED VISIBLE LIGHT FORMULAS:
WIDTH = WINDOW WIDTH - 3.5"
HEIGHT = WINDOW HEIGHT - SASH HEIGHT - 3.336"

Approved as complying with the Florida Building Code
Date 05/03/2012
NOA# 11-1222.04
Miami-Dade Product Control
By

ANTHONY LYNN MILLER
LICENSE
No. 58705
STATE OF FLORIDA
PROFESSIONAL ENGINEER
4/2/12

A. LYNN MILLER, P.E.
P.E.# 58705


PGT®
1070 TECHNOLOGY DRIVE
N. VENICE, FL 34275
P.O. BOX 1529
NOKOMIS, FL 34274
CERT. OF AUTH. #29296


| Revised By: | Date: | Revision: |
|---|---|---|
| | | |
| Revised By: | Date: | Revision: |
| | | |

Description: ANCHOR QUANTITIES C

Drawn By: J ROSOWSKI

Title: SH WINDOW - LARGE MISSILE

Date: 11/11/11

| Series/Model: | Scale: | Sheet: | Drawing No. | Rev: |
|---|---|---|---|---|
| SH-800 | NTS | 5 OF 7 | MD-SH800LM-01 | |

TABLE 7:

| Item | Dwg. # | Part # | Description | Material |
|---|---|---|---|---|
| 1 | 4002A | 612225W | Frame Head | 6063-T6 |
| 2 | 4050D | 64050DW | Frame Hi-Rise Sill | 6063-T6 |
| 3 | 4004 | 612227W | Frame Jamb | 6063-T6 |
| 5 | 4054B | 64054BW | Fixed Meeting Rail | 6063-T6 |
| 7 | 4006D | 64006W | Sash Top Rail | 6063-T6 |
| 8 | 4009 | 764009W | Sill Lock | 6063-T5 |
| 11 | 4051A | 64051W | Sash Bottom Rail - Hi-Rise | 6063-T6 |
| 12 | 4008 | 612231W | Sash Side Rail | 6063-T5 |
| 13 | 1155 | 781PQA | #8 x 1" Quad Pn. SMS | Steel or 410 SS |
| 16 | 1016 | 7858WW | #8 x 5/8" Ph. Fl. SMS | Steel |
| 17 | 4087 | 44087AWR | Sash Bottom Rail End Cap | Rigid PVC |
| 19 | 4081 | 64081W | Head Fastener Cover (Opt.) | 6063-T6 |
| 21 | 1096 | 71797W | Top Sweep Latch | Cast Zinc |
| 22 | 4080B | 74080BK | Mtg Rail Sweep Latch Plug | Rigid PVC |
| 23 | 1088 | 7SPRNG | Sill Latch Spring | Spring Steel |
| 24 | 1226D | 61226DW | Wstp., Bulb Vinyl (@ Sash Bottom Rail) | Flex PVC 70 |
| 25 | 1235 | 67S16G | .170" x .270" Fin Seal | |
| 26 | 4066 | 64066G | .187" x .230" Fin Seal | |
| 27 | 1062 | 61062G | .187" x .270" Fin Seal | |
| 28 | 1626 | 7PAD1627 | Adhesive Open Cell Foam Pad | Polyethylene |
| 29 | | 74087 | Hi-Rise Sill Gasket | Polyethylene |
| 30 | 4076D | 74076DW | Head Gasket | Polyethylene |
| 31 | 4053 | 64053W | Sash Stop Cover (All Balances) | 6063-T5 |
| 32 | 1080 | 6BALCVR916W | Balance Cover (All Balances) | Rigid Vinyl |
| 34 | | 75831KEZ | Caldwell EZ-Lift Balance | |
| 35 | | 7834AA | #8 x 3/4" PH PN (EZ-Lift) | Steel |
| 36 | 4085 | 44085WR | Sash Cover Guide (EZ-Lift) | Vinyl |
| 38 | | | Caldwell Ultra-Lift Balance (Sash > 55 lbs) | |
| 39 | | 78X1FPAX | #8 x 1" Ph. Fl. St. Stl. (Ultra-Lift) | 410 SS |
| 40 | 1086 | 44086WR | Sash Cover Guide (Ultra-Lift) | Vinyl |
| 41 | 4029-1 | 7ULBRKT | Sash Bracket (Ultra-Lift) | Steel |
| 42 | | 7832X12FPFX | #8-32 x 1/2" PH FL SS (Ultra-Lift) | 410 SS |
| 44 | | 6DURAK14 | Duraseal - 1/4" (IG Only) | |
| 45 | 1622 | 71622K | Lami Setting Block 3/32" x 25/64" x 1" | Neoprene, 85 duro |
| 46 | 1715 | 71715K | IG Setting Block 1/8" x 3/4" x 1-1/14" | Neoprene, 85 duro |
| 48 | 4222-1A | 64222AW | 7/16" Lami Glazing Bead | 6063-T5 |
| 49 | 4039-1A | 64039BW | 13/16" Lami IG Glazing Bead | 6063-T5 |
| 50 | 1224 | 6TP247W | Bulb Bead Weatherstrip, IG | Polyethylene |
| 51 | 1225 | 6TP248K | Bulb Bead Weatherstrip | Polyethylene |
| 52 | 134 | 66615W | Add-on Flange (Opt.) | 6063-T6 |
| 53 | 1014E | 61014FW | Screen Frame | Aluminum |
| 54 | 1630 | 47042W | Screen Corner Key w/Rings | Vinyl |
| 55 | 1631 | 47041W | Screen Corner Key w/out Rings | Vinyl |
| 56 | 320B | 7320SPNG | Screen Spring | Spring Steel |
| 57 | 1624 | 61624K | Screen Spline - .135 Dia. Foam | Rubber |
| 58 | | 61635K | Screen Spline - .135 Dia. Hard | Rubber |
| 59 | | 61816C34 | Screen Cloth | Fiberglass |
| 61 | | Dow Corning 899 Silicone Glazing Sealant or Equiv. | | |
| 93 | | 3/16" HS - .090" DuPont SentryGlas Interlayer - 3/16" HS | | |
| 94 | | 1/8" T - 1/4" Air - 3/16" HS - .090" DuPont SentryGlas Interlayer - 3/16" HS | | |

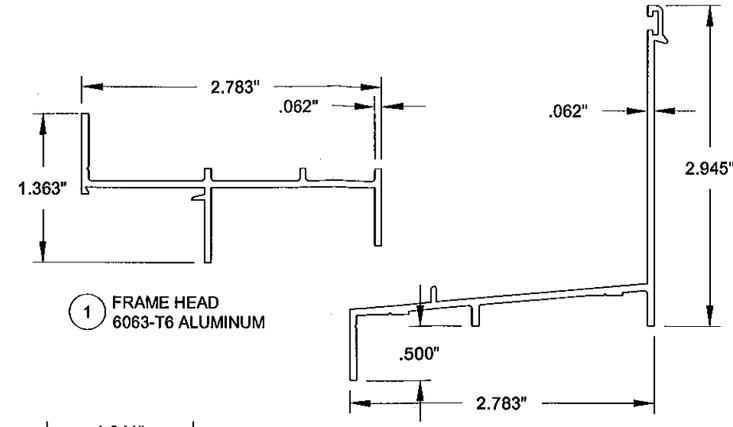


1 FRAME HEAD 6063-T6 ALUMINUM

2 FRAME SILL, HI-RISE 6063-T6 ALUMINUM

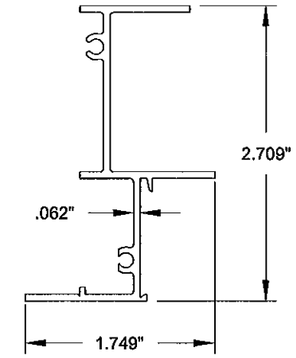


3 FRAME JAMB 6063-T6 ALUMINUM

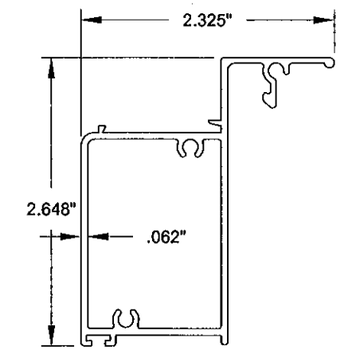


11 SASH BOTTOM RAIL 6063-T6 ALUMINUM

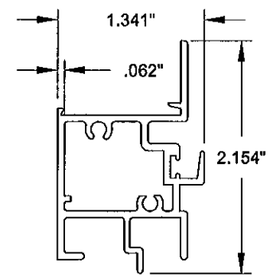


5 FIXED MEETING RAIL 6063-T6 ALUMINUM

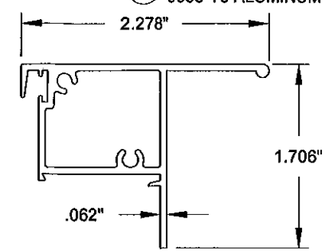


7 SASH TOP RAIL 6063-T6 ALUMINUM

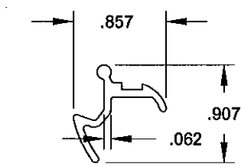


8 SASH SILL LOCK 6063-T5 ALUMINUM

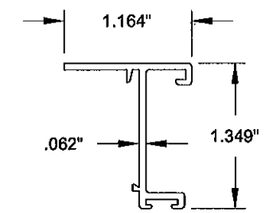


12 SASH SIDE RAIL 6063-T5 ALUMINUM

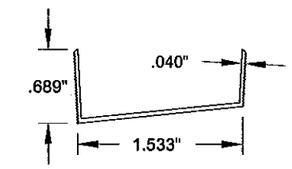


19 HEAD FASTENER COVER 6063-T6 ALUMINUM

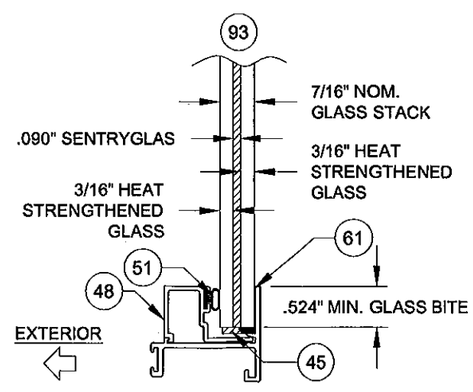


7/16" GLAZING DETAIL

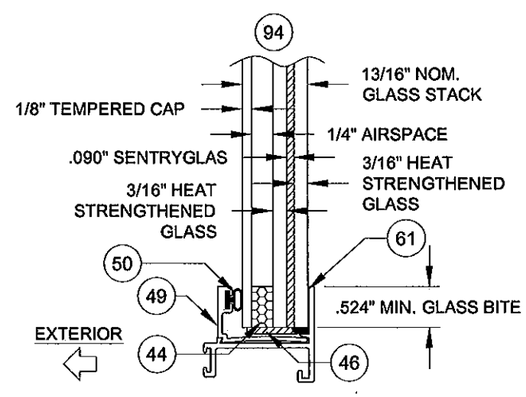


13/16" I.G. GLAZING DETAIL

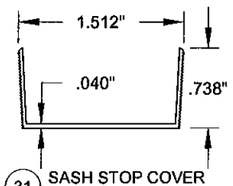


31 SASH STOP COVER 6063-T5 ALUMINUM

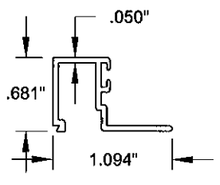


48 7/16" BEADING 6063-T5 ALUMINUM

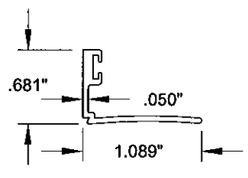


49 13/16" IG BEADING 6063-T5 ALUMINUM

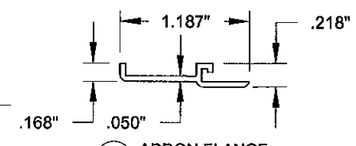


52 ADDON FLANGE 6063-T6 ALUMINUM

ANTHONY LYNN MILLER
LICENSE
No. 58705
STATE OF FLORIDA
PROFESSIONAL ENGINEER
4/9/12

A. LYNN MILLER, P.E.
P.E.# 58705

PGT®

1070 TECHNOLOGY DRIVE
N. VENICE, FL 34275
P.O. BOX 1529
NOKOMIS, FL 34274

CERT. OF AUTH. #29296

| Revised By: | Date: | Revision: |
|---|---|---|
| | | |
| Revised By: | Date: | Revision: |
| | | |

Approved as complying with the Florida Building Code
Date 05/03/2012
NOA# 11-1222.04
Miami Dade Product Control
By

Description: BOM & PART DETAILS

Drawn By: J ROSOWSKI

Title: SH WINDOW - LARGE MISSILE

Date: 11/11/11

| Series/Model: | Scale: | Sheet: | Drawing No. | Rev: |
|---|---|---|---|---|
| SH-800 | NTS | 6 OF 7 | MD-SH800LM-01 | |

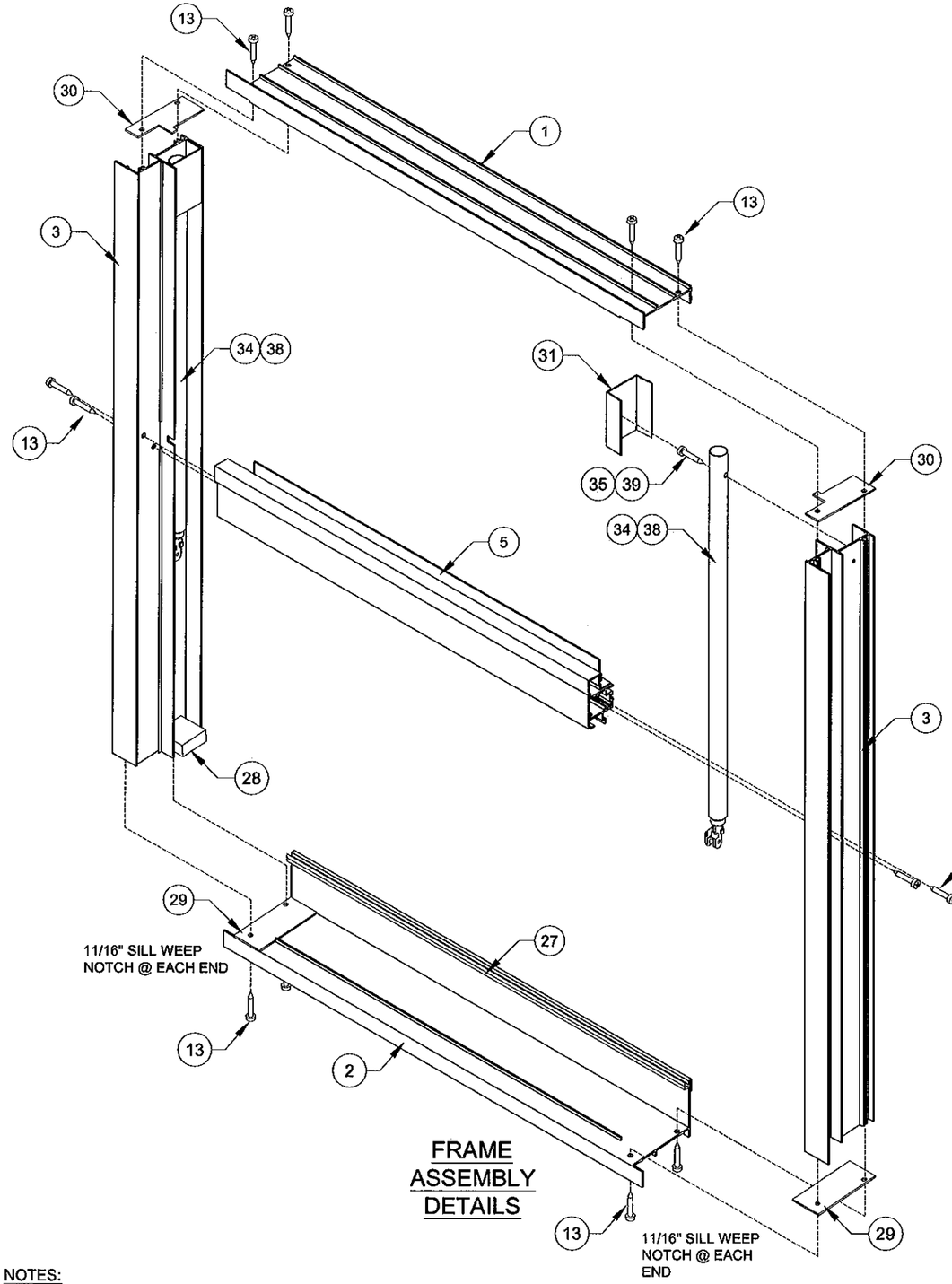


FRAME
ASSEMBLY
DETAILS

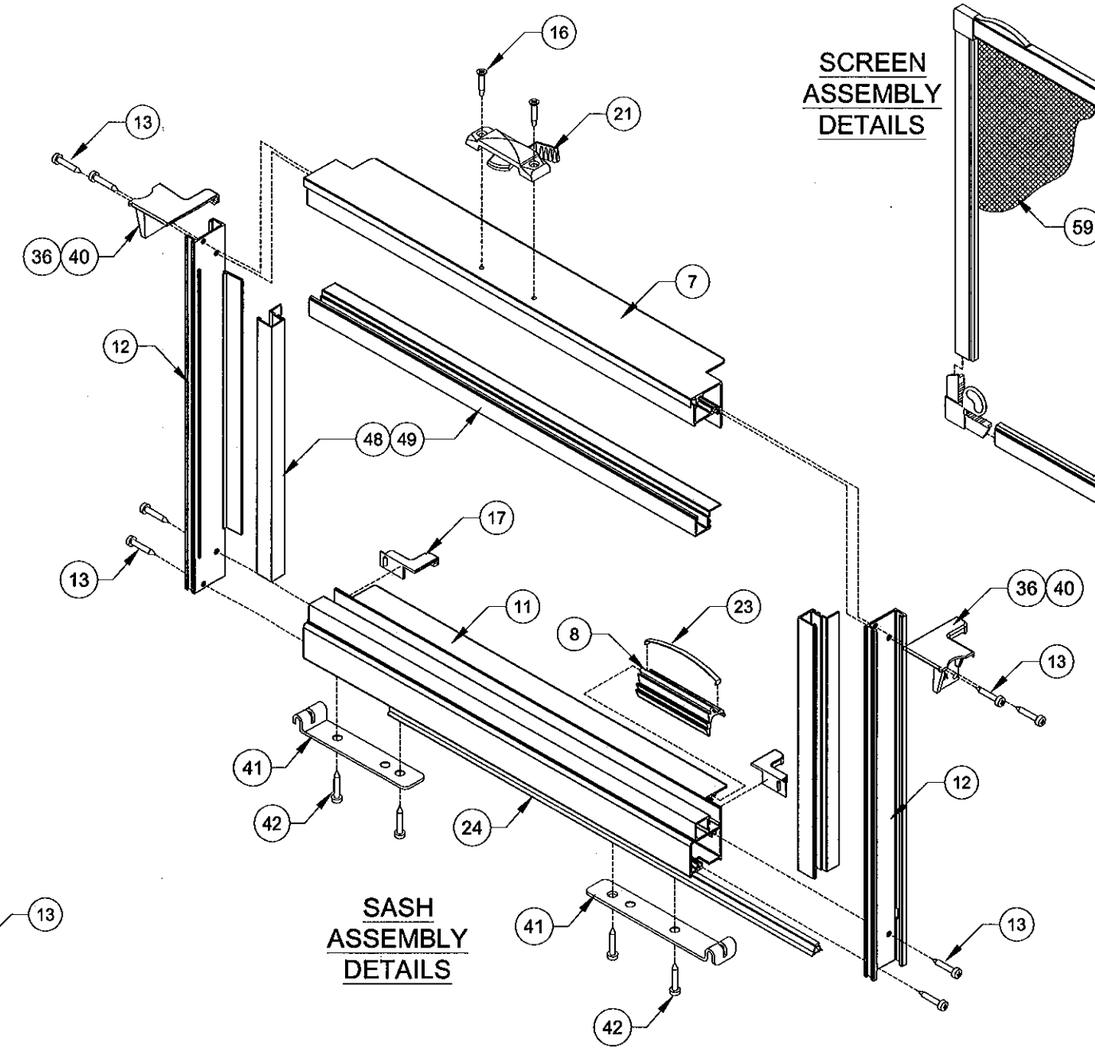


SASH
ASSEMBLY
DETAILS

SCREEN
ASSEMBLY
DETAILS

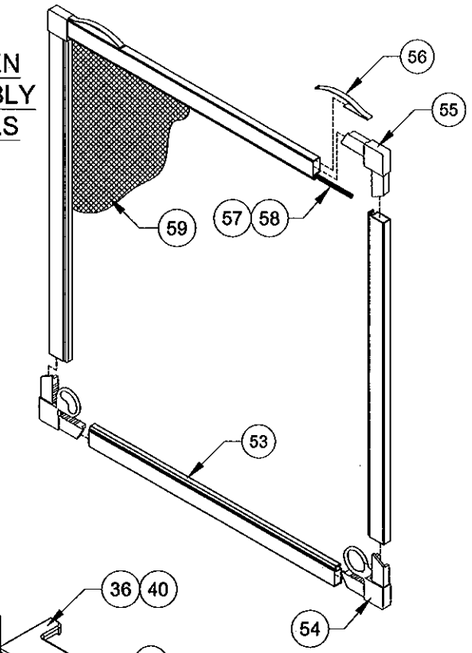


NOTES:
1) GLASS & FIXED LITE BEADING NOT SHOWN FOR CLARITY.
2) HARDWARE FOR BOTH TYPES OF BALANCES SHOWN.
REFER TO TABLE 7, SHEET 6 FOR SPECIFIC HARDWARE
REQUIREMENTS USED FOR EACH BALANCE TYPE.

ANTHONY LYNN MILLER
LICENSE
No. 58705
STATE OF
FLORIDA
PROFESSIONAL ENGINEER
4/9/12
A. LYNN MILLER, P.E.
P.E.# 58705

PGT®
1070 TECHNOLOGY DRIVE
N. VENICE, FL 34275
P.O. BOX 1529
NOKOMIS, FL 34274
CERT. OF AUTH. #29296

Approved as complying with the
Florida Building Code
Date 05/03/2012
NOA# 11-1222.04
Miami-Dade Product Control
By

| Revised By: | Date: | Revision: |
|---|---|---|
| Revised By: | Date: | Revision: |

| Description: | Drawn By: |
|---|---|
| ASSEMBLY DETAILS | J ROSOWSKI |

| Title: | Date: |
|---|---|
| SH WINDOW - LARGE MISSILE | 11/11/11 |

| Series/Model: | Scale: | Sheet: | Drawing No. | Rev: |
|---|---|---|---|---|
| SH-800 | NTS | 7 OF 7 | MD-SH800LM-01 | |