MIAMI-DADE COUNTY
DEPARTMENT OF PERMITTING, ENVIRONMENT, AND REGULATORY AFFAIRS (PERA)
BOARD AND CODE ADMINISTRATION DIVISION

MIAMI-DADE COUNTY
PRODUCT CONTROL SECTION
11805 SW 26 Street, Room 208
Miami, Florida 33175-2474
T (786) 315-2590 F (786) 315-2599
www.miamidade.gov/pera/

NOTICE OF ACCEPTANCE (NOA)

Oldcastle BuildingEnvelope™
803 Airport Road
Terrell, TX 75160

SCOPE:

This NOA is being issued under the applicable rules and regulations governing the use of construction materials. The documentation submitted has been reviewed and accepted by Miami-Dade County PERA - Product Control Section to be used in Miami Dade County and other areas where allowed by the Authority Having Jurisdiction (AHJ).

This NOA shall not be valid after the expiration date stated below. The Miami-Dade County Product Control Section (In Miami Dade County) and/or the AHJ (in areas other than Miami Dade County) reserve the right to have this product or material tested for quality assurance purposes. If this product or material fails to perform in the accepted manner, the manufacturer will incur the expense of such testing and the AHJ may immediately revoke, modify, or suspend the use of such product or material within their jurisdiction. PERA reserves the right to revoke this acceptance, if it is determined by Miami-Dade County Product Control Section that this product or material fails to meet the requirements of the applicable building code.

This product is approved as described herein, and has been designed to comply with the Florida Building Code, including the High Velocity Hurricane Zone.

DESCRIPTION: Series "HR-250 Captured" Aluminum Curtain Wall System- L.M.I.

APPROVAL DOCUMENT: Drawing No. **11-124,** titled "HR-250 Captured Curtain Wall System – Large Missile Impact Laminated Glass", sheets 1 through 36 of 36, dated 11/18/11 with revision #1 dated 11/18/11, prepared by Tilteco, Inc., signed and sealed by Walter Tillit Jr., P.E., bearing the Miami-Dade County Product Control Revision stamp with the Notice of Acceptance number and expiration date by the Miami-Dade County Product Control Section.

MISSILE IMPACT RATING: Large and Small Missile Impact Resistant

LABELING: Each unit shall bear a permanent label with the manufacturer's name or logo, city, state, model/series, and following statement: "Miami-Dade County Product Control Approved", unless otherwise noted herein.

RENEWAL of this NOA shall be considered after a renewal application has been filed and there has been no change in the applicable building code negatively affecting the performance of this product.

TERMINATION of this NOA will occur after the expiration date or if there has been a revision or change in the materials, use, and/or manufacture of the product or process. Misuse of this NOA as an endorsement of any product, for sales, advertising or any other purposes shall automatically terminate this NOA. Failure to comply with any section of this NOA shall be cause for termination and removal of NOA.

ADVERTISEMENT: The NOA number preceded by the words Miami-Dade County, Florida, and followed by the expiration date may be displayed in advertising literature. If any portion of the NOA is displayed, then it shall be done in its entirety.

INSPECTION: A copy of this entire NOA shall be provided to the user by the manufacturer or its distributors and shall be available for inspection at the job site at the request of the Building Official.

This NOA **revises NOA # 11-0126.10** and consists of this page 1 and evidence pages E-1, E-2 and E-3, as well as approval document mentioned above.

The submitted documentation was reviewed by **Manuel Perez, P.E.**

MIAMI-DADE COUNTY APPROVED

NOTICE OF ACCEPTANCE: EVIDENCE SUBMITTED

A. **DRAWINGS**

1. Manufacturer's die drawings and sections.
2. Drawing No **11-124**, Sheets 1 through 36 of 36, titled "HR-250 Captured Curtain Wall System - Large Missile Impact Laminated Glass", dated 11/18/11 with revision #1 dated 11/18/11, prepared by Tilteco, Inc., signed and sealed by Walter A. Tillit, Jr., P.E.

B. TESTS

1. Test reports on: 1) Air Infiltration Test, per FBC, TAS 202-94
   2) Uniform Static Air Pressure Test, Loading per FBC, TAS 202-94
   3) Water Resistance Test, per FBC, TAS 202-94
   4) Large Missile Impact Test per FBC, TAS 201-94
   5) Cycling Test per FBC, TAS 203-94

   along with installation diagram of aluminum window wall system, prepared by Hurricane Test Laboratory, LLC, Test Report No. **HTL-0105-1109-04,** elevation **#7**, specimen 1, dated 11/13-16/04, signed and sealed by Vinu J. Abraham, P.E.
   (Submitted under previous NOA #05-1102.09)
2. Test reports on: 1) Air Infiltration Test, per FBC, TAS 202-94
   2) Uniform Static Air Pressure Test, Loading per FBC, TAS 202-94
   3) Water Resistance Test, per FBC, TAS 202-94
   4) Large Missile Impact Test per FBC, TAS 201-94
   5) Cycling Test per FBC, TAS 203-94

   along with installation diagram of aluminum window wall system, prepared by Hurricane Test Laboratory, LLC Test Report No. **HTL-0105-0809-04,** elevation **#6**, specimen 2, dated 08/09-12/04, signed and sealed by Vinu J. Abraham, P.E.
   (Submitted under previous NOA #05-1102.09)
3. Test reports on: 1) Uniform Static Air Pressure Test, Loading per FBC, TAS 202-94
   2) Large Missile Impact Test per FBC, TAS 201-94
   3) Cycling Test per FBC, TAS 203-94

   along with installation diagram of aluminum curtain wall system, prepared by Hurricane Test Laboratory, LLC Test Report No. **HTL-0105-0717-04,** elevation **#8**, specimen 1, dated 07/14-15/04, signed and sealed by Vinu J. Abraham, P.E.
   (Submitted under previous NOA #05-1102.09)

Manuel Perez, P.E.
Product Control Examiner
NOA No. 12-0109.05
Expiration Date: October 05, 2016
Approval Date: March 01, 2012

NOTICE OF ACCEPTANCE: EVIDENCE SUBMITTED

E. MATERIAL CERTIFICATIONS

1. Notice of Acceptance No. **09-0223.05** issued to **Solutia, Inc.** for their "**Saflex Multi-layer Glass Interlayer**" dated 04/08/09, expiring on 04/08/14.\
2. Notice of Acceptance No. **08-0520.08** issued to Solutia Inc. for their "**Saflex Composites Glass Interlayer with PET Core**" dated 02/25/09, expiring on 12/11/13.
3. Notice of Acceptance No. **08-1118.07** issued to Oldcastle Glass Inc. for their "**StormGlass Glass Interlayer**", dated 03/05/09, expiring on 12/11/13.

F. STATEMENTS

1. Statement letter of conformance, complying with FBC-2007 and FBC-2010, dated January 6, 2012, signed and sealed by Walter A. Tillit, Jr., P.E.
2. Statement letter of no financial interest, dated January 7, 2011, signed and sealed by Walter A. Tillit, Jr., P.E.
3. Name change documentation, dated September, 2010, was submitted under previous **NOA# 11-0126.10**.
4. Laboratory compliance letter for Test Report No. **HTL-0105-0809-04 and HTL-0105-1109-04,** issued by Hurricane Test Laboratory, LLC, Inc., dated 01/03/05, signed and sealed by Vinu J. Abraham, P.E.
   (Submitted under previous NOA #05-1102.09)
5. Laboratory compliance letter for Test Report No. **HTL-0105-0210-04, HTL-0105-0511-04, HTL-0105-0306-04, and HTL-0105-0717-04,** issued by Hurricane Test Laboratory, LLC, Inc., dated 12/10/04, signed and sealed by Vinu J. Abraham, P.E.
   (Submitted under previous NOA #05-1102.09)

G. OTHERS

1. Notice of Acceptance No. **11-0126.10**, issued to Oldcastle Building Envelope™ for their **Series "HR-250 Captured" Aluminum Curtain Wall System – L.M.I.**, approved on 03/31/11 and expiring on 10/05/16

Manuel Perez

Manuel Perez, P.E.
Product Control Examiner
NOA No. 12-0109.05
Expiration Date: October 05, 2016
Approval Date: March 01, 2012

NOTICE OF ACCEPTANCE: EVIDENCE SUBMITTED

B. TESTS (CONTINUED)

4. Test reports on: 1) Air Infiltration Test, per FBC, TAS 202-94
2) Uniform Static Air Pressure Test, Loading per FBC, TAS 202-94
3) Water Resistance Test, per FBC, TAS 202-94
4) Large Missile Impact Test per FBC, TAS 201-94
5) Cycling Test per FBC, TAS 203-94
along with installation diagram of aluminum window wall system, prepared by Hurricane Test Laboratory, LLC Test Report No. **HTL-0105-0511-04,** elevations: **#2,** #2A, **#4** and **#5,** dated 05/10-11/04, signed and sealed by Vinu J. Abraham, P.E.
(Submitted under previous NOA #05-1102.09)

5. Test reports on: 1) Air Infiltration Test, per FBC, TAS 202-94
2) Uniform Static Air Pressure Test, Loading per FBC, TAS 202-94
3) Large Missile Impact Test per FBC, TAS 201-94
4) Cycling Test per FBC, TAS 203-94
along with installation diagram of aluminum window wall system, prepared by Hurricane Test Laboratory, LLC Test Report No. **HTL-0105-0306-04,** elevation **#3,** dated 03/03/04, signed and sealed by Vinu J. Abraham, P.E.
(Submitted under previous NOA #05-1102.09)

6. Test reports on: 1) Uniform Static Air Pressure Test, Loading per FBC, TAS 202-94
2) Large Missile Impact Test per FBC, TAS 201-94
3) Cycling Test per FBC, TAS 203-94
along with installation diagram of aluminum curtain wall system, prepared by Hurricane Test Laboratory, LLC Test Report No. **HTL-0105-0210-04,** elevation **#1,** dated 02/09/04, signed and sealed by Vinu J. Abraham, P.E.
(Submitted under previous NOA #05-1102.09)

C. CALCULATIONS

1. Anchor verification calculations and structural analysis, complying with FBC-2007 and FBC-2010, prepared by Tilteco, Inc., dated 11/26/10 and updated on 01/06/12, signed and sealed by Walter A. Tillit, Jr., P.E.

2. Glazing complies with ASTM E1300-04

D. QUALITY ASSURANCE

1. Miami-Dade Department of Permitting, Environment, and Regulatory Affairs (PERA).

Manuel Perez, P.E.
Product Control Examiner
NOA No. 12-0109.05
Expiration Date: October 05, 2016
Approval Date: March 01, 2012

PRODUCT APPROVAL FOR HR-250 IMPACT-RESISTANT CAPTURED CURTAIN WALL SYSTEM WITH MULTIPLE GLAZING INFILLS FOR USE IN HURRICANE ZONES REQUIRING LARGE MISSILE IMPACT PROTECTION.

GENERAL NOTES:

1. HR-250 CAPTURED CURTAIN WALL SYSTEM LARGE MISSILE IMPACT LAMINATED GLASS, SHOWN ON THIS PRODUCT APPROVAL DOCUMENT (P.A.D.) HAS BEEN VERIFIED FOR COMPLIANCE IN ACCORDANCE WITH THE 2007 & 2010 EDITIONS OF THE FLORIDA BUILDING CODE. CURTAIN WALL MAY BE INSTALLED WITHIN HIGH VELOCITY HURRICANE ZONES.

   DESIGN WIND LOADS SHALL BE DETERMINED AS PER SECTION 1620 OF THE ABOVE MENTIONED CODES, USING ASCE 7-05 STANDARD FOR INSTALLATIONS UNDER 2007 FBC & ASCE 7-10 FOR INSTALLATIONS UNDER 2010 FBC AND SHALL NOT EXCEED THE MAXIMUM (A.S.D.) DESIGN PRESSURE RATINGS INDICATED ON NOTE 2. IN ORDER TO VERIFY THE ABOVE CONDITION, ULTIMATE DESIGN WIND LOADS DETERMINED PER ASCE 7-10 SHALL BE FIRST REDUCED TO A.S.D. DESIGN WIND LOADS BY MULTIPLYING THEM BY 0.6 IN ORDER TO TO COMPARE THESE W/ MAX. (A.S.D) DESIGN PRESSURE RATINGS INDICATED ON NOTE 2.

   IN ORDER TO VERIFY THAT ANCHORS ON THIS P.A.D., AS TESTED, WERE NOT OVERSTRESSED; A 33% INCREASE IN ALLOWABLE STRESS FOR WIND LOADS WAS **NOT** USED IN THEIR ANALYSIS.
   THIS PRODUCT'S ADEQUACY FOR IMPACT AND CYCLIC RESISTANCE HAS BEEN VERIFIED IN ACCORDANCE WITH SECTION 1626 OF THE ABOVE MENTIONED CODES AS PER PROTOCOLS TAS-201, TAS-202, TAS-203, PER HURRICANE TEST LABORATORY REPORTS # 0105-0210-04, 0105-0511-04, 0105-0306-04, 0105-0717-04, 0105-0809-04 AND 0105-0919-04 AND AS PER SUBMITTED STRUCTURAL CALCULATIONS, PERFORMED AS PER SECTION 1612 OF THE FLORIDA BUILDING CODE.

2. MAXIMUM DESIGN PRESSURE RATING FOR THIS CURTAIN WALL SHALL BE AS SHOWN ON SHEETS 8, 9, 10, 12, 13 AND 14 THRU 17.

3. THIS PRODUCT WILL NOT REQUIRE A HURRICANE PROTECTION DEVICE FOR INSTALLATIONS UP TO 30 FEET ABOVE GRADE.

4. THIS PRODUCT IS APPROVED FOR AIR/WATER INFILTRATION (15.0 PSF WATER PRESSURE).

5. HR-250 CAPTURED CURTAIN WALL SYSTEM-LARGE MISSILE IMPACT LAMINATED GLASS SHALL COMPLY WITH SECTIONS 2406.1 & 2411.4.1 AND 2411.4.2 OF THE FLORIDA BUILDING CODE.

6. ALL STEEL FRAMING SHALL BE WELDED IN ACCORDANCE WITH THE AMERICAN WELDING SOCIETY A.W.S. D.1.1 REGULATIONS. USE CERTIFIED WELDERS. USE E-70XX ELECTRODES. ALL JOINT WELDING BETWEEN ANGLES AND STEEL STRUCTURE SHALL BE 3/16" FILLET WELD TYPE.

7. PROVIDE 3/4" MAX. LOAD BEARING SHIM SPACE, WHEN ALLOWED BY THIS P.A.D.

8. SEE ANCHOR SCHEDULES ON SHEETS 12, 13 AND 14 THRU 17 FOR ANCHOR TYPE IDENTIFICATION AND SPACING.

9. REMAINING COMPONENTS FOR THIS CURTAIN WALL SYSTEM SHALL BE AS INDICATED ON BILL OF MATERIALS, SHEETS 4 AND 5 OF THIS DRAWING.

10. ALL ALUMINUM EXTRUSIONS IN CONTACT WITH STEEL AND CONCRETE SHALL COMPLY WITH SECTIONS 2003.8.4.2 AND 2003.8.4.4 OF THE FLORIDA BUILDING CODE, RESPECTIVELY.

11. SHOP DRAWINGS PREPARED BASED ON THIS APPROVAL AND TAKING INTO ACCOUNT THE SPECIFIC JOB CONDITIONS, SHALL BE SUBMITTED TO THE BUILDING OFFICIAL AS PART OF THE PERMIT DOCUMENTS.

12. SUBSTRATE MATERIAL ON THESE DRAWINGS AS "BY OTHERS" MUST WITHSTAND THE LOADS IMPOSED BY THE CURTAIN WALL SYSTEM.

13. THIS PRODUCT'S INSTALLATION SHALL COMPLY WITH ALL SPECS INDICATED IN THIS DRAWING PLUS ANY BUILDING AND ZONING REGULATIONS PROVIDED BY THE JURISDICTION WHERE PERMIT IS APPLIED TO.

14. (a) THIS P.A.D. PREPARED BY THIS ENGINEER IS GENERIC AND DOES NOT PROVIDE INFORMATION FOR A SITE SPECIFIC PROJECT; i.e. WHERE THE SITE CONDITIONS DEVIATE FROM THE P.A.D.

    (b) CONTRACTOR TO BE RESPONSIBLE FOR THE SELECTION, PURCHASE AND INSTALLATION INCLUDING LIFE SAFETY OF THIS PRODUCT, BASED ON THIS P.A.D., PROVIDED HE/SHE DOES NOT DEVIATE FROM THE CONDITIONS DETAILED ON THIS DOCUMENT. CONSTRUCTION SAFETY AT SITE IS THE CONTRACTOR'S RESPONSIBILITY.

    (c) THIS P.A.D. WILL BE CONSIDERED INVALID IF ALTERED BY ANY MEANS.

    (d) SITE SPECIFIC PROJECTS SHALL BE PREPARED BY A FLORIDA REGISTERED ENGINEER OR ARCHITECT WHICH WILL BECOME THE ENGINEER OF RECORD (E.O.R.) FOR THE PROJECT AND WHO WILL BE RESPONSIBLE FOR THE PROPER USE OF THE P.A.D. ENGINEER OF RECORD, ACTING AS DELEGATED ENGINEER TO THE P.A.D. ENGINEER, SHALL SUBMIT TO THIS LATTER THE SITE SPECIFIC DRAWINGS FOR REVIEW.

    (e) ORIGINAL P.A.D. SHALL BEAR THE DATE AND ORIGINAL SEAL AND SIGNATURE OF THE PROFESSIONAL ENGINEER OF RECORD THAT PREPARED IT.

15. CURTAIN WALL MANUFACTURER'S LABEL SHALL BE PLACED ON A READILY VISIBLE LOCATION. ONE LABEL SHALL BE PLACED FOR EVERY UNIT. LABEL SHALL READ AS FOLLOWS:

Oldcastle
BuildingEnvelope®
TERRELL TX.
MIAMI-DADE COUNTY PRODUCT CONTROL APPROVED.
SERIES (HR-250 CAPTURED) ALUMINUM CURTAIN WALL SYSTEM - L.M.I.

INDEX:

SHEET 1: GENERAL NOTES, INDEX AND INSTRUCTIONS.
SHEET 2: HR-250 IMPACT RESISTANT CAPTURED CURTAIN WALL SYSTEM COMPONENTS.
SHEET 3: HR-250 IMPACT RESISTANT CAPTURED CURTAIN WALL SYSTEM COMPONENTS (CONTINUED).
SHEET 4: BILL OF MATERIALS.
SHEET 5: BILL OF MATERIALS (CONTINUED).
SHEET 6: ISOMETRIC ELEVATION FOR HR-250 IMPACT RESISTANT CAPTURED CURTAIN WALL SYSTEM.
SHEET 7: TYPICAL GLAZING DETAILS.
SHEET 8: MAX. FRAME WIDTH "b" & FRAME LENGTH "a" VERSUS A.S.D. DESIGN PRESSURE RATING (p.s.f.) SCHEDULE.
SHEET 9: MAX. A.S.D. DESIGN PRESSURE RATING FOR SINGLE SPAN STANDARD AND CORNER MULLIONS.
SHEET 10: MAX. A.S.D. DESIGN PRESSURE RATING FOR TWIN SPAN STANDARD, DOOR JAMB AND CORNER MULLIONS.
SHEET 11: OPTIONS FOR TWIN SPAN STANDARD, DOOR JAMB AND CORNER MULLIONS INSTALLATION.
SHEET 12: MAX. A.S.D. DESIGN PRESSURE RATING FOR SINGLE SPAN (HEAD & SILL) & TWIN SPAN (SILL ONLY) MULLION CONNECTIONS.
SHEET 13: MAX. A.S.D. DESIGN PRESSURE RATING FOR TWIN SPAN MULLION HEAD ANCHOR CONNECTIONS.
SHEET 14: MAX. A.S.D. DESIGN PRESSURE RATING FOR JAMBS AT SINGLE SPAN CURTAIN WALL FASTENED W/ 3/8"ø FASTENERS.
SHEET 15: MAX. A.S.D. DESIGN PRESSURE RATING FOR JAMBS AT TWIN SPAN CURTAIN WALL FASTENED W/ 3/8"ø FASTENERS.
SHEET 16: MAX. A.S.D. DESIGN PRESSURE RATING FOR JAMBS AT SINGLE SPAN CURTAIN WALL FASTENED W/ 1/2"ø FASTENERS.
SHEET 17: MAX. A.S.D. DESIGN PRESSURE RATING FOR JAMBS AT TWIN SPAN CURTAIN WALL FASTENED W/ 1/2"ø FASTENERS.
SHEET 18: HEAD CONNECTION DETAILS (SIDE VIEWS).
SHEET 19: HORIZONTAL CONNECTION DETAILS (SIDE VIEWS).
SHEET 20: SILL CONNECTION DETAILS (SIDE VIEWS).
SHEET 21: HORIZONTAL SECTIONS AT STANDARD MULLION DETAILS (PLAN).
SHEET 22: JAMB CONNECTIONS AT HORIZONTALS (PLAN).
SHEET 23: CORNER MULLION DETAILS (PLAN).
SHEET 24: JAMBS CONNECTIONS AT INSIDE CORNER (PLAN).
SHEET 25: SILL & HEAD CONNECTION DETAILS FOR SINGLE SPAN & SILL CONNECTION DETAIL AT TWIN SPAN (PLANS).
SHEET 26: OPTION #1 FOR HEAD CONNECTION OF TWIN SPAN STANDARD MULLIONS.
SHEET 27: OPTION #2 FOR HEAD CONNECTION OF TWIN SPAN STANDARD MULLIONS.
SHEET 28: HEAD CONNECTION AT TWIN SPAN JAMBS.
SHEET 29: HEAD CONNECTION DETAIL FOR TWIN SPAN CORNER MULLION.
SHEET 30: MULLION AND JAMB SPLICES AT TWIN SPAN ONLY (PLAN).
SHEET 31: MULLION AND JAMB SPLICES AT TWIN SPAN ONLY (SIDE VIEW)
SHEET 32: CORNER MULLION SPLICE AT TWIN SPAN (PLAN).
SHEET 33: STANDARD, JAMB AND CORNER MULLIONS CONNECTION TO EXISTING INTERMEDIATE FLOOR STRUCTURE W/ DEAD AND WIND LOAD ANCHORS.
SHEET 34: JAMB AND CORNER MULLIONS CONNECTION TO EXISTING INTERMEDIATE FLOOR STRUCTURE W/ DEAD AND WIND LOAD ANCHORS (PLAN).
SHEET 35: DOOR HEADER CONNECTION TO CURTAIN WALL HORIZONTALS & DOOR SILL CONNECTION TO POURED CONCRETE STRUCTURE AND TO ADJACENT CURTAIN WALL MULLION "D".
SHEET 36: DOOR JAMBS CONNECTION TO CURTAIN-WALL.

INSTRUCTIONS:

STEP 1: DETERMINE A.S.D. DESIGN WIND LOAD REQUIREMENTS BASED ON WIND VELOCITY, BUILDING HEIGHT, WIND ZONE, USING APPLICABLE ASCE 7 STANDARDS.

STEP 2: GO TO SCHEDULE ON SHEET 8 TO DETERMINE MAXIMUM A.S.D. DESIGN PRESSURE RATING (psf) OF DESIRED GLASS SIZE BASED ON GLASS PANEL DIMENSIONS.

STEP 3: DETERMINE MAXIMUM MULLION AND JAMB SPAN "L"(FT) FOR A GIVEN MULLION EFFECTIVE SPACING "b", FOR SINGLE AND TWIN SPANS ON SCHEDULES ON SHEETS 9 AND 10.

STEP 4: USING SCHEDULES ON SHEETS 12, 13 AND 14 THRU 17 SELECT ANCHOR OPTION FOR MULLIONS AND JAMBS WITH A.S.D. DESIGN PRESSURE RATING EQUAL OR GREATER THAN A.S.D. DESIGN LOAD SPECIFIED IN STEP 1.

STEP 5: USING SCHEDULE ON SHEET 19, VERIFY MAXIMUM A.S.D. DESIGN PRESSURE RATING OF HORIZONTALS (IF USED) AND HORIZONTAL EXPANSION.

STEP 6: THE LOWEST VALUE OF A.S.D. DESIGN PRESSURE RATING RESULTING FROM STEPS 2, 3, 4 AND 5 SHALL APPLY TO THE ENTIRE SYSTEM.

FLORIDA BUILDING CODE (High Velocity Hurricane Zone)

HR-250 CAPTURED CURTAIN WALL SYSTEM
LARGE MISSILE IMPACT LAMINATED GLASS

Oldcastle BuildingEnvelope™
803 Airport Rd - Terrell, TX 75160
www.OldcastleBE.com - Phone 800-869-4567

REV. No	DESCRIPTION	DATE
1	OLD 10-165	11/18/11
2	-	-
3	-	-
4	-	-

M.C.V./A.G. — DRAWN BY:
11/18/11 — DATE
11-124 — DRAWING No
SHEET 1 OF 36

©2011 TILTECO, INC

TILTECO INC.
TILLIT TESTING & ENGINEERING COMPANY
8355 N.W. 35th St., Ste. 305, VIRGINIA GARDENS, FL 33166
Phone: (305)871-1535 - Fax: (305)871-1531
e-mail: tilteco@bol.com
EB-0005719
WALTER A. TILLIT JR. P.E.
FLORIDA Lic. # 44167

WALTER A. TILLIT JR. LICENSE NO. 44167 STATE OF FLORIDA PROFESSIONAL ENGINEER
P.E. SEAL AND SIGNATURE MUST BE DATED

PRODUCT REVISED
as complying with the Florida
Building Code
Acceptance No 12-0109.05
Expiration Date Oct. 5, 2016
By
Miami-Dade Product Control

MIAMI-DADE COUNTY

HR-250 IMPACT RESISTANT CAPTURED CURTAIN WALL SYSTEM COMPONENTS

SCALE : 1/4" = 1"

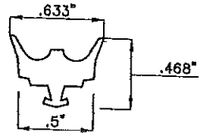

① EXTERIOR GLAZING GASKET
CW-17

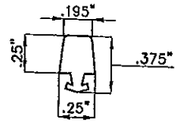

② INTERIOR SPACER GASKET
FG-5185

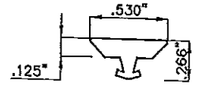

④ EXTERIOR PERIMETER GASKET
CW-187

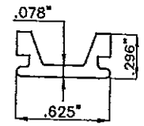

⑤ THERMAL ISOLATOR
CW-6

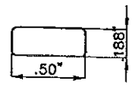

⑥ SETTING BLOCK
CW-2101

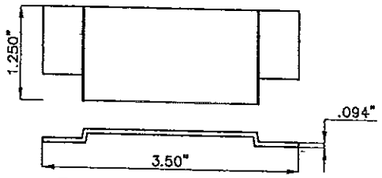

⑦ MULLION END CAP
HR-FP-1
SCALE : 1/8" = 1"

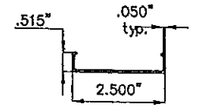

⑫ 2 1/2" COVER
CW-2

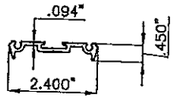

⑬ 2 1/2" PRESSURE BAR
ZG-60

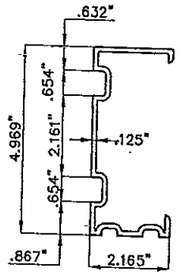

⑭ MULLION SPLICE
HR-FP-20

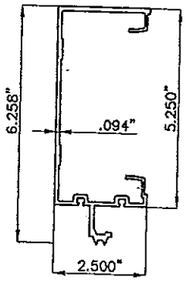

⑮ MULLION
CW-1995

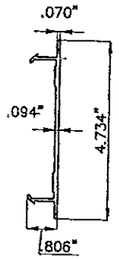

⑯ MULLION FILLER
CW-1996

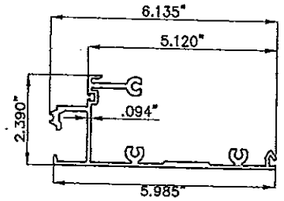

⑰ HEAD/SILL
CW-1997

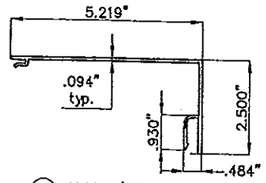

⑱ HEAD/SILL TRIM
CW-1998

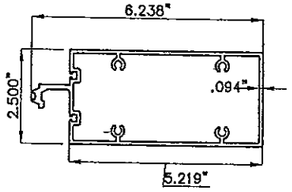

⑳ HORIZONTAL
CW-2000

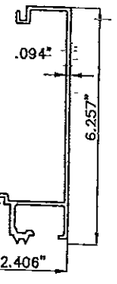

㉑ TWO PIECE JAMB
FEMALE HALF
CW-2002

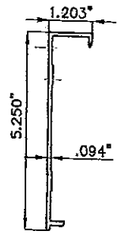

㉒ TWO PIECE JAMB
MALE HALF
CW-2001

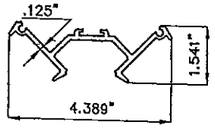

㉓ CORNER PRESSURE
PLATE
CW-2003

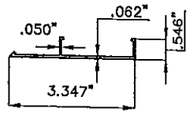

㉔ CORNER FACE CAP
CW-2004

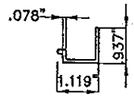

㉕ POCKET FILLER
CW-2005

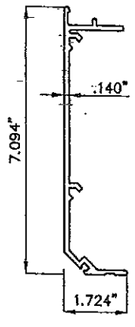

㉖ CORNER MULLION
FEMALE HALF
CW-2018

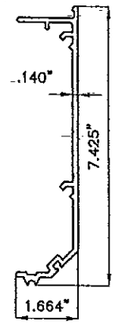

㉗ CORNER MULLION
MALE HALF
CW-2019

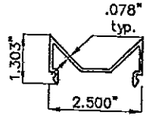

㉘ CORNER MULLION FILLER
CW-2020

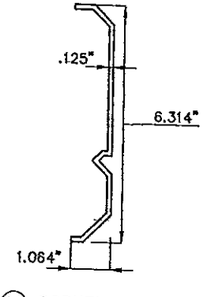

㉙ CORNER SPLICE
CW-2021

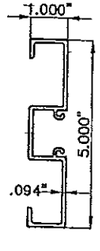

㉚ DOOR JAMB
D-226

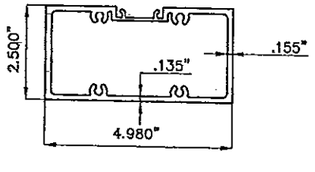

㉛ DOOR
HEADER-OFFSET
ARM
FG-5172

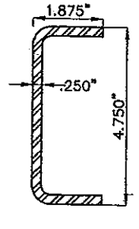

㉞ REINFORCING STEEL
RS-25

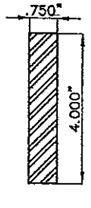

㊱ REINFORCING
STEEL BAR

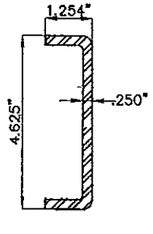

㊲ REINFORCING STEEL
FG5000-PP-8

FLORIDA BUILDING CODE (High Velocity Hurricane Zone)

HR-250 CAPTURED CURTAIN WALL SYSTEM
LARGE MISSILE IMPACT LAMINATED GLASS

Oldcastle BuildingEnvelope™
803 Airport Rd - Terrell, TX 75160
www.OldcastleBE.com - Phone 800-869-4567

REV. No	DESCRIPTION	DATE
1	OLD 10-103	11/18/11
2	-	-
3	-	-
4	-	-

M.C.V./A.G. DRAWN BY:
11/18/11 DATE
11-124 DRAWING No.
SHEET 2 OF 36

©2011 TILTECO, INC

TILTECO INC.
TILLIT TESTING & ENGINEERING COMPANY
6355 N.W. 36th St., Ste. 305, VIRGINIA GARDENS, FL 33166
Phone : (305)871-1530 ; Fax : (305)871-1531
e-mail: tilteco@aol.com
EB-0006719
WALTER A. TILLIT Jr. P.E.
FLORIDA Lic. # 44167

WALTER A. TILLIT JR. LICENSE NO. 44167 STATE OF FLORIDA PROFESSIONAL ENGINEER

P.E. SEAL/SIGNATURE/DATE

PRODUCT REVISED
as complying with the Florida
Building Code
Acceptance No 12-0104.06
Expiration Date 08.5.2016
By
Miami Dade Product Control

MIAMI-DADE COUNTY

HR-250 IMPACT RESISTANT CAPTURED CURTAIN WALL SYSTEM COMPONENTS (CONTINUED)

SCALE : 1/4" = 1"

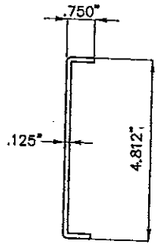

(38) BRAKE METAL SPLICE MALE HR-FP-13

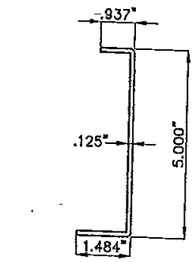

(39) BRAKE METAL SPLICE FEMALE HR-FP-14

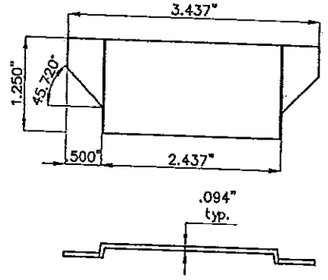

(47) 90° MULLION END CAP HR-FP-7

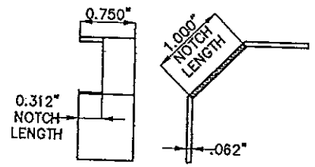

(48) WATER DIVERTER HR-FP-11

SCALE : 1/8" = 1"

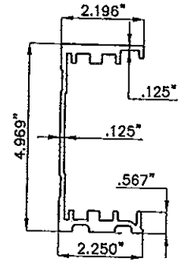

(50) HEAD ANCHOR SLEEVE HR-FP-15

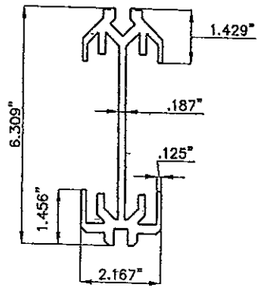

(51) HEAD ANCHOR SLEEVE CORNER HR-FP-17

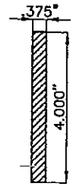

(52) STEEL REINFORCING

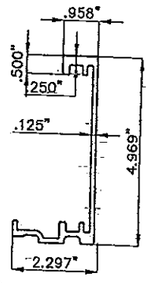

(53) JAMB HEAD ANCHOR SLEEVE HR-FP-16

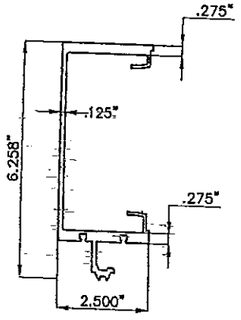

(54) HEAVY MULLION CW-2097

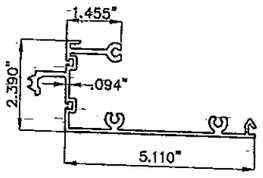

(55) OPEN BACK HORIZONTAL CW-2117

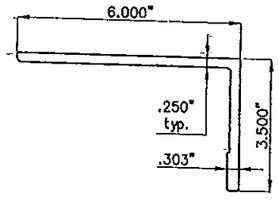

(61) HEAD ANCHOR LEFT HR-FP-24

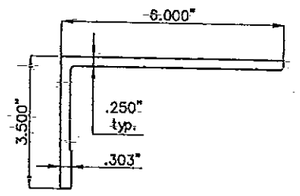

(61A) HEAD ANCHOR RIGHT HR-FP-25

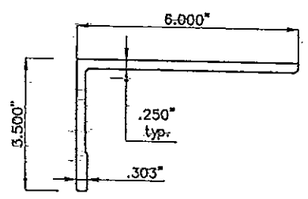

(62) HEAD ANCHOR CORNER LEFT HR-FP-22

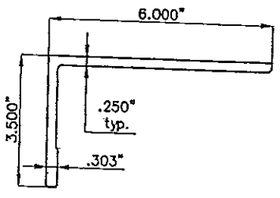

(63) HEAD ANCHOR CORNER RIGHT HR-FP-23

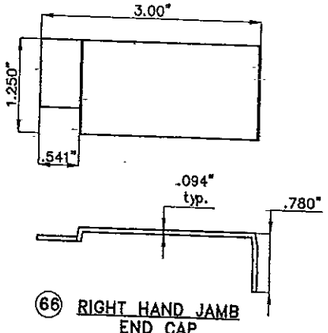

(66) RIGHT HAND JAMB END CAP HR-FP-2

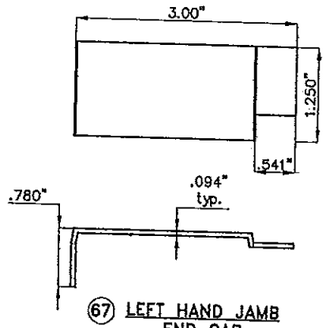

(67) LEFT HAND JAMB END CAP HR-FP-3

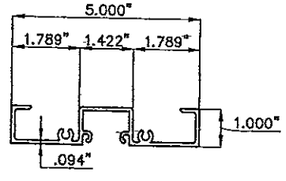

(68) SUB-FRAME HEADER D-231

FLORIDA BUILDING CODE (High Velocity Hurricane Zone)

HR-250 CAPTURED CURTAIN WALL SYSTEM
LARGE MISSILE IMPACT LAMINATED GLASS

M.C.V./A.G. DRAWN BY:
11/18/11 DATE
11-124 DRAWING No
SHEET 3 OF 36

Oldcastle BuildingEnvelope™
803 Airport Rd - Terrell, TX 75160
www.OldcastleBE.com - Phone 800-869-4567

REV. No	DESCRIPTION	DATE
1	OLD 10-103	11/18/11
2	-	-

REV. No	DESCRIPTION	DATE
3	-	-
4	-	-

©2011 TILTECO, INC

TILTECO, INC
TILLIT TESTING & ENGINEERING COMPANY
6355 N.W. 36th. St., Ste. 305, VIRGINIA GARDENS, FL. 33166
Phone : (305)871-6551 Fax : (305)871-1531
e-mail: tilteco@aol.com
EB-0006719
WALTER A. TILLIT JR., P.E.
FLORIDA Lic. # 44167

WALTER A. TILLIT JR. LICENSE No. 44167 STATE OF FLORIDA PROFESSIONAL ENGINEER

P.E. SEAL/SIGNATURE/DATE

PRODUCT REVISED
as complying with the Florida
Building Code
Acceptance No 12-0104.05
Expiration Date 5-5-2016
By
Miami Dade Product Control

MIAMI-DADE COUNTY

BILL OF MATERIALS

ITEM No.	PART NUMBER	DESCRIPTION	DIMENSIONS	MATERIAL	MANUFACTURER	NOTES
1.	CW-17	EXTERIOR GLAZING GASKET	.190 SPACE	EPDM	VARIES	
2.	FG-5185	INTERIOR SPACER GASKET	.25 X .25	EPDM	VARIES	
3.	DOW 995	STRUCTURAL SILICONE	FILL SPACE	SILICONE	DOW CORNING	
4.	CW-187	EXTERIOR PERIMETER GASKET	.530 X .266	EPDM	VARIES	
5.	CW-6	THERMAL ISOLATOR	.625 X .296 X .078	EPDM	VARIES	
6.	CW-2101	SETTING BLOCK	.500 X .188 X 4" LONG	EPDM	VARIES	
7.	HR-FP-1	MULLION END CAPS	3.5 X 1.25 X .094	RIGID VINYL	VARIES	
8.	921 OR 795	PERIMETER SEALANT	FILL SPACE	POLYURETHANE/SILICONE	VULKEM OR DOW 795	
9.	FS-8	SPLINE ASSEMBLY SCREW	#14 X 1 HHSTS FS-322 (STALGARD COATED BY ELCO)	STEEL	VARIES	
10.	FS-7	JAMB SCREW	#10 X 3/4" PFH TYPE B	STEEL	VARIES	(2) @ EA. HORIZ. 12" O.C. BETWEEN HORIZ. @ (2) PIECES JAMB
11.	FS-322	PRESSURE PLATE SCREW	#12-14 X 1" HWH #3 FS-322 (STALGARD COATED BY ELCO)	STEEL	VARIES	(1) AT EACH 24" O.C.
12.	CW-2	2 1/2" COVER	.515 X 2.5 X .050	6063-T6 ALUMINUM	OBE	
13.	ZG-60	2 1/2" PRESSURE BAR	2.40 X .450 X .094	6063-T6 ALUMINUM	OBE	SEE NOTE: #1
14.	HR-FP-20	MULLION SPLICE	2.16 X 4.96 X .125 X 6" LONG	6063-T6 ALUMINUM	OBE	
15.	CW-1995	MULLION	2.50 X 6.26 X .094	6063-T6 ALUMINUM	OBE	
16.	CW-1996	MULLION FILLER	.806 X 4.734 X .094	6063-T6 ALUMINUM	OBE	
17.	CW-1997	HEAD/SILL	2.39 X 6.11 X .094	6063-T6 ALUMINUM	OBE	
18.	CW-1998	HEAD/SILL TRIM	2.50 X 5.219 X .094	6063-T5 ALUMINUM	OBE	
19.	=NOT USED				OBE	
20.	CW-2000	HORIZONTAL	2.50 X 6.23 X .094	6063-T6 ALUMINUM	OBE	
21.	CW-2002	TWO PIECE JAMB - MALE	1.203 X 5.25 X .094	6063-T6 ALUMINUM	OBE	
22.	CW-2001	TWO PIECE JAMB - FEMALE	2.40 X 6.25 X .094	6063-T6 ALUMINUM	OBE	
23.	CW-2003	CORNER PRESSURE PLATE	1.541 X 4.389 X .125	6063-T5 ALUMINUM	OBE	
24.	CW-2004	CORNER FACE CAP	.546 X 3.347 X .062	6063-T5 ALUMINUM	OBE	
25.	CW-2005	POCKET FILLER	.937 X 1.119 X .078	6063-T5 ALUMINUM	OBE	
26.	CW-2018	CORNER MULLION - FEMALE	1.724 X 7.094 X .140	6063-T6 ALUMINUM	OBE	
27.	CW-2019	CORNER MULLION - MALE	1.724 X 7.094 X .140	6063-T6 ALUMINUM	OBE	
28.	CW-2020	CORNER MULLION FILLER	1.303 X 2.50 X .078	6063-T5 ALUMINUM	OBE	
29.	CW-2021	CORNER SPLICE	1.064 X 6.314 X .125	6063-T6 ALUMINUM	OBE	6" LONG
30.	D-226	DOOR JAMB	1.00 X 5.00 X .094	6063-T6 ALUMINUM	OBE	
31.	FG-5172	DOOR HEADER-OFFSET ARM	2.50 X 4.98 X .135	6063-T6 ALUMINUM	OBE	
32.	FASTENER	STEEL REINFORCING ATTACHMENT BOLT	1/4-20 X 2" BOLT WITH WASHER AND NUT	STEEL	VARIES	
33.	**	BLUNDER PLUG (OPTIONAL)	1 1/4" DIA.		VARIES	ALT. PERIMETER ANCHOR ATTACHMENT @ JAMBS
34.	RS-25	REINFORCING STEEL	4 11/16" X 1 7/8" X 1/4" CHANNEL	A36 STEEL	VARIES	USED @ VERT. MULLION COATED ZINC RICH PRIMER
35.	NOT USED					
36.	**	REINFORCING STEEL BAR	3/4" X 4" STL. BAR	A36 STEEL	VARIES	USED @ VERT. MULLION COATED ZINC RICH PRIMER
37.	FG5000-PP-8	REINFORCING STEEL	4 1/2" X 1 1/4" X 1/4" CHANNEL	A36 STEEL	VARIES	
38.	HR-FP-13	BRAKE METAL SPLICE - MALE	.75 X 4.812 X .75 X .125 X 8" LONG	3030 ALUMINUM	VARIES	USED @ JAMBS 6" LONG
39.	HR-FP-14	BRAKE METAL SPLICE - FEMALE	.937 X 5.00 X 1.437 X .125 X 8" LONG	3030 ALUMINUM	VARIES	USED @ JAMBS 6" LONG
40.	FASTENER	ANCHOR BOLT	5/8-11 X 4 1/2" GRD 5 BOLT AND HEX NUT AND WASHER	STEEL	VARIES	ZINC COATED, PER ASTM B-633

NOTE #1: ALL VERTICALS PRESSURE PLATES SHALL BE CUT 1/4" SHORT IN LENGTH TO ALLOW FOR WEEP SLOT

FLORIDA BUILDING CODE (High Velocity Hurricane Zone)

©2011 TILTECO, INC.

TILLIT TESTING & ENGINEERING COMPANY INC.
8355 N.W. 35th. St. Ste. 305, Virginia Gardens, FL 33166
Phone : (305)871-1530 . Fax : (305)871-1531
e-mail: tilteco@aol.com
EB-0006719
WALTER A. TILLIT Jr. P.E.
FLORIDA Lic. # 44167

HR-250 CAPTURED CURTAIN WALL SYSTEM
LARGE MISSILE IMPACT LAMINATED GLASS

Oldcastle BuildingEnvelope™
803 Airport Rd - Terrell, TX 75160
www.OldcastleBE.com - Phone 800-869-4567

REV. No	DESCRIPTION	DATE
1	OLD 10-103	11/16/11
2	-	-
3	-	-
4	-	-

M.C.V./A.G. DRAWN BY:
11/18/11 DATE
11-124 DRAWING No
SHEET 4 OF 36

WALTER A. TILLIT JR. LICENSE No. 44167 STATE OF FLORIDA PROFESSIONAL ENGINEER
P.E. SEAL/SIGNATURE/DATE

PRODUCT REVISED
as complying with the Florida
Building Code
Acceptance No. 12-0109.05
Expiration Date 04-5-2016
By
Miami-Dade Product Control

MIAMI-DADE COUNTY

BILL OF MATERIALS (CONTINUED)

ITEM No.	PART NUMBER	DESCRIPTION	DIMENSIONS	MATERIAL	MANUFACTURER	NOTES
41.	**	STEEL DEADLOAD ANCHOR	4" X 6" X 5/16" X 5" LONG	A36 STEEL	VARIES	USED @ MULLIONS & JAMB. ZINC COATED, PER ASTM B-633
42.	**	SLIP PAD	4" X 4" X .063	NYLATRON	KORALATH	USED @ MID POINT ANCHORS
43.	FASTENER	JAMB ANCHOR BOLT	5/8"-11 X 1 1/2" BOLT	A36 STEEL	VARIES	ZINC COATED, PER ASTM B-633
44.	**	JAMB TAP PLATE	4" X 6" X 1/4"	A36 STEEL	VARIES	USED @ MID POINT ANCHORS
45.	FS-323	JAMB TAP PLATE SCREW	#12 X 1" PFH SCREW TYPE B	STEEL	VARIES	
46.	**	STEEL DEADLOAD ANCHOR @ CORNER	4" X 8" X 1/4" X 5" LONG	A36 STEEL	VARIES	USED @ 90° CORNER. ZINC COATED, PER ASTM B-633
47.	HR-FP-7	90 DEG MULLION END CAP	3.437 X 1.25 X .094	RIGID VINYL	OLDCASTLE BUILDINGENVELOPE	TOP & BOTTOM OF MULLION
48.	HR-FP-11	WATER DIVERTER	0.875 X 1.061 X 0.875 X .062	VINYL	VARIES	0.75" LONG. SEE NOTE #2 BELOW
49.	SM-5601	JOINT SEALANT TAPE	.125 X .500 X VARIES	BUTYL	SCHNEE-MOREHEAD	USED @ END OF INTERM HORIZONTALS
50.	HR-FP-15	HEAD ANCHOR SLEEVE	2 3/16" X 4 15/16" X X 2 1/2" LONG	6063-T6 ALUMINUM	VARIES	
51.	HR-FP-17	HEAD ANCHOR SLEEVE CORNER	2 3/16" X 6 3/16" X 3" LONG	6063-T6 ALUMINUM	VARIES	USED @ JAMBS
52.	**	STEEL REINFORCING	3/8" X 4" STL. BAR	A36 STEEL	VARIES	ZINC COATED, PER ASTM B-633
53.	HR-FP-16	JAMB HEAD ANCHOR SLEEVE	2 3/16" X 5 5/16" X 5 1/8" LONG	6063-T6 ALUMINUM	OLDCASTLE BUILDINGENVELOPE	USED @ JAMBS
54.	CW-2097	HEAVY MULLION	2.50 X 6.26 X .125	6063-T6 ALUMINUM	OLDCASTLE BUILDINGENVELOPE	
55.	CW-2117	OPEN BACK HORIZONTAL	2.39 X 5.11 X .094	6063-T6 ALUMINUM	OLDCASTLE BUILDINGENVELOPE	
59.	FASTENER-	STEEL REINFORCING ATTACHMENT BOLT	1/4-20 X 2" BOLT WITH WASHER AND NUT SAE GRADE 5	STEEL	VARIES	ZINC COATED, PER ASTM B-633
60.	FASTENER	STEEL REINFORCING ATTACHMENT BOLT	1/4-20 X 3 1/2" BOLT WITH WASHER AND NUT SAE GRADE 5	STEEL	VARIES	THROUGH-BOLT @ (55) HORIZONTALS ZINC COATED, PER ASTM B-633
61.	HR-FP-24	HEAD ANCHOR LEFT	3 1/2" x 6" x 4 1/4" LONG	6063-T6 ALUMINUM	OLDCASTLE BUILDINGENVELOPE	
61A.	HR-FP-25	HEAD ANCHOR RIGHT	3 1/2" x 6" x 4 1/4" LONG	6063-T6 ALUMINUM	OLDCASTLE BUILDINGENVELOPE	
62.	HR-FP-22	HEAD ANCHOR CORNER LEFT	2.147" X 6.314" X .125"	6063-T6 ALUMINUM	OLDCASTLE BUILDINGENVELOPE	
63.	HR-FP-23	HEAD ANCHOR CORNER RIGHT	2.147" X 6.314" X .25"	6063-T6 ALUMINUM	OLDCASTLE BUILDINGENVELOPE	
64.	FASTENER	STEEL REINFORCING ATTACHMENT BOLT	1/4-20 X 1 1/2" BOLT WITH WASHER AND NUT SAE GARDE 5	STEEL	VARIES	THROUGH-BOLT @ ALL HORIZONTALS
66.	HR-FP-2	RIGHT HAND JAMB END CAP	3 X 1.25 X .094	RIGID VINYL	VARIES	SEE NOTE # 2 BELOW
67.	HR-FP-3	LEFT HAND JAMB END CAP	3 X 1.25 X .094	RIGID VINYL	VARIES	SEE NOTE # 2 BELOW
68.	D-231	SUB-FRAME HEADER	1.00 X 5.00 X .094	6063-T6 ALUMINUM	OLDCASTLE BUILDINGENVELOPE	
69.	FASTENER	PERIMETER ANCHOR	1/4" TAPCON	STEEL	VARIES	

** NO PART NUMBER ASSIGNED

NOTE #2-BEAD OF DOW CORNING 995 SILICONE SHALL BE APPLIED TO FRAME SURFACE BEFORE PART IS INSTALLED

FLORIDA BUILDING CODE (High Velocity Hurricane Zone)

HR-250 CAPTURED CURTAIN WALL SYSTEM
LARGE MISSILE IMPACT LAMINATED GLASS

Oldcastle BuildingEnvelope™
803 Airport Rd - Terrell, TX 75160
www.OldcastleBE.com - Phone 800-869-4567

REV. No.	DESCRIPTION	DATE
1	OLD 10-103	11/16/11
2	-	-
3	-	-
4	-	-

M.C.V./A.G. DRAWN BY:
11/18/11 DATE
11-124 DRAWING No
SHEET 5 OF 36

©2011 TILTECO, INC

TILLIT TESTING & ENGINEERING COMPANY
6355 N.W. 36th. St., Ste. 303, VIRGINIA GARDENS, FL 33166
Phone : (305)871-1530 . Fax : (305)871-1531
e-mail: tilteco@aol.com
EB-0006719
WALTER A. TILLIT Jr. P.E.
FLORIDA Lic. # 44167

WALTER A. TILLIT JR. LICENSE No. 44167 STATE OF FLORIDA PROFESSIONAL ENGINEER

P.E. SEAL/SIGNATURE/DATE

PRODUCT REVISED
as complying with the Florida
Building Code
Acceptance No 12-0104.05
Expiration Date Oct 5 2016
By
Miami Dade Product Control

MIAMI-DADE COUNTY

ISOMETRIC ELEVATION FOR HR-250 IMPACT RESISTANT CAPTURED CURTAIN WALL SYSTEM

N.T.S.

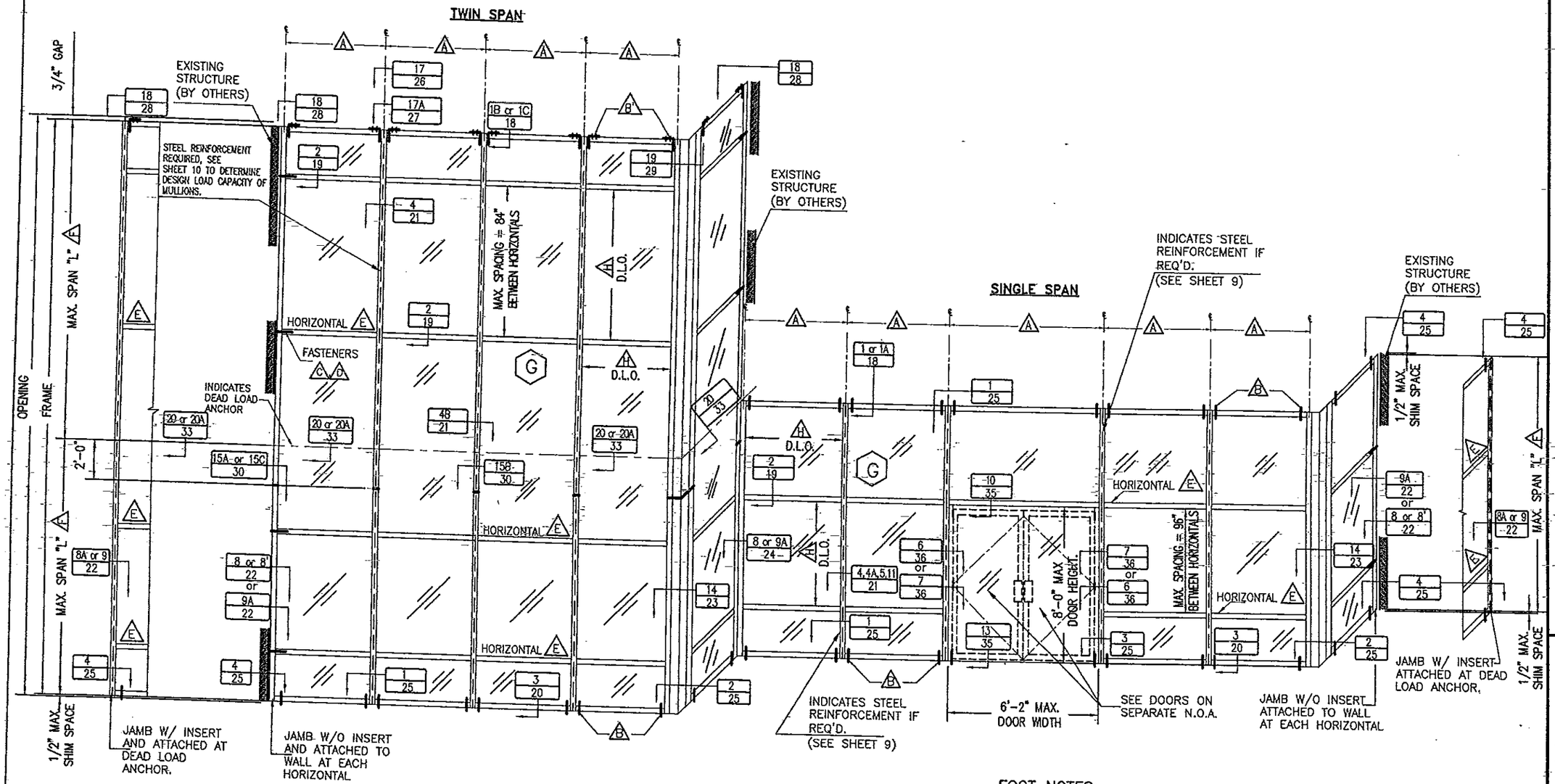

FOOT NOTES:

- (A) FOR MULLION SPACING SEE SHEETS 9 AND 10.
- (B) FOR HEAD (AT SINGLE SPAN CASE) AND SILL (AT SINGLE AND TWIN SPAN CASES), FASTENERS QUANTITY, TYPES AND SPECS SEE SHEET 12.
- (B') FOR HEAD (AT TWIN SPAN), FASTENERS QUANTITY, TYPES AND SPECS SEE SHEET 13.
- (C) FOR JAMB FASTENERS QUANTITY, TYPES AND SPECS SEE SHEETS 14 THRU 17.
- (D) SEE SHEETS 14 THRU 17 FOR MAXIMUM A.S.D. DESIGN PRESSURE RATING FOR JAMBS CONNECTED TO EXISTING STRUCTURE.
- (E) USE OF HORIZONTALS (SEE SECTION 2/19 AND 2A/19) DESIGN LOADS FOR LIMITATIONS.
- (F) FOR MAXIMUM MULLION SPAN SEE SHEETS 9 AND 10.
- (G) FOR GLAZING DETAILS AND GLASS SCHEDULE SEE SHEET 7.
- (H) FOR MAXIMUM D.L.O. SEE SCHEDULE ON SHEET 8.

FLORIDA BUILDING CODE (High Velocity Hurricane Zone)

HR-250 CAPTURED CURTAIN WALL SYSTEM
LARGE MISSILE IMPACT LAMINATED GLASS

Oldcastle BuildingEnvelope™
803 Airport Rd - Terrell, TX 75160
www.OldcastleBE.com - Phone 800-869-4567

REV. No	DESCRIPTION	DATE
1	OLD 10-103	11/16/11
2	-	-
3	-	-
4	-	-

M.C.V./A.G. DRAWN BY:
11/18/11 DATE
11-124 DRAWING No
SHEET 6 OF 36

©2011 TILTECO, INC

TILTECO INC.
TILLIT TESTING & ENGINEERING COMPANY
6355 N.W. 36th. St., Ste. 305, VIRGINIA GARDENS, FL. 33166
Phone : (305)871-1330 . Fax : (305)871-1331
e-mail: tilteco@aol.com
EB-0006719
WALTER A. TILLIT JR. P.E.
FLORIDA Lic. # 44167

WALTER A. TILLIT JR. LICENSE No. 44167 STATE OF FLORIDA PROFESSIONAL ENGINEER

P.E. SEAL/SIGNATURE/DATE

PRODUCT REVISED
as complying with the Florida
Building Code
Acceptance No 12-0131.05
Expiration Date Oct. 5, 2016
By
Miami-Dade Product Control

MIAMI-DADE COUNTY

TYPICAL GLAZING DETAILS

* USE 13/16" MIN. GLASS BITE AT CORNER MULLION LOCATIONS (SEE SHEETS 25 AND 32)
SCALE 1/8" = 1"

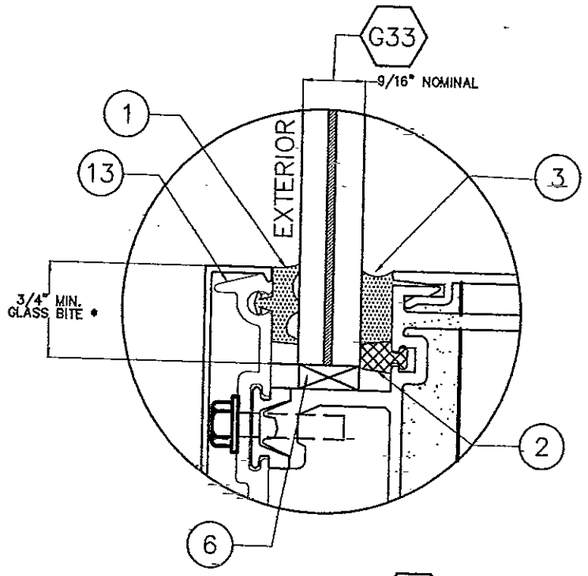

GLASS TYPE G33

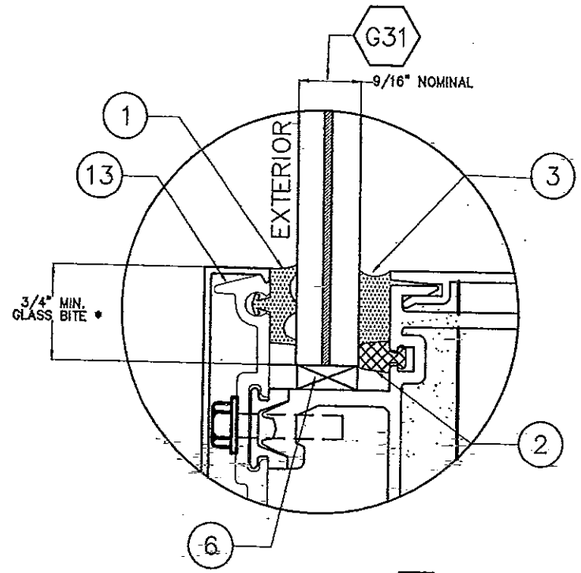

GLASS TYPE G31

GLASS SCHEDULE

GLASS LABEL	GLASS COMPOSITION	MANUFACTURER NAME	MAX. D.L.O.	MISSILE TYPE
G33	9/16" OVERALL THICKNESS LAMINATED GLASS CONSISTING OF EXTERIOR (2) 1/4" H.S. AND .075" VANCEVA/STORMGLASS COMPOSITE INTERLAYER.	SOLUTIA	SEE SCHEDULE ON SHEET 8	LARGE MISSILE IMPACT
G31	9/16" OVERALL THICKNESS LAMINATED GLASS CONSISTING OF EXTERIOR (2) 1/4" H.S. AND .090" SAFLEX MULTI-LAYER (SERIES PVB) INTERLAYER.	SOLUTIA	SEE SCHEDULE ON SHEET 8	LARGE MISSILE IMPACT

FLORIDA BUILDING CODE (High Velocity Hurricane Zone)

©2011 TILTECO, INC

TILTECO INC.
TILLIT TESTING & ENGINEERING COMPANY
6355 N.W. 36th. St., Ste. 305, VIRGINIA GARDENS, FL 33166
Phone : (305)871-1530 Fax : (305)871-1531
e-mail: tiltecoe@aol.com
EB-0006719
WALTER A. TILLIT Jr. P.E.
FLORIDA Lic. # 44167

HR-250 CAPTURED CURTAIN WALL SYSTEM
LARGE MISSILE IMPACT LAMINATED GLASS

Oldcastle BuildingEnvelope™
803 Airport Rd - Terrell, TX 75160
www.OldcastleBE.com - Phone 800-869-4567

REV. No	DESCRIPTION	DATE	REV. No	DESCRIPTION	DATE
1	GLASS/SCHEDULE/FIXED	06/28/11	3	-	-
2	-	-	4	-	-

M.C.V./A.G.
DRAWN BY:

11/18/11
DATE

11-124
DRAWING No

SHEET 7 OF 36

WALTER A. TILLIT JR. LICENSE No. 44167 STATE OF FLORIDA PROFESSIONAL ENGINEER
11/28/11

P.E. SEAL/SIGNATURE/DATE

PRODUCT REVISED
as complying with the Florida Building Code
Acceptance No 12-0104.05
Expiration Date Oct. 5, 2016
By Miami-Dade Product Control

MIAMI-DADE COUNTY

MAXIMUM FRAME WIDTH "a" AND FRAME LENGTH "b" VERSUS A.S.D. DESIGN PRESSURE RATING (psf) SCHEDULE *

GLASS TYPE ⟨G33⟩		
DIMENSION "a" *	DIMENSION "b" *	MAXIMUM A.S.D.DESIGN PRESSURE RATING(psf)
24"	from 24" to 101"	±100.0
30"	from 30" to 101"	±100.0
36"	from 36" to 101"	±100.0
42"	from 42" to 101"	±100.0
48"	from 48" to 101"	±100.0
54"	from 54" to 101"	±100.0
60"	from 60" to 101"	±100.0
66"	from 66" to 95"	±94.5
72"	from 72" to 87.5"	±86.5
78"	from 78" to 80.5"	±80.0

GLASS TYPE ⟨G31⟩		
DIMENSION "a" *	DIMENSION "b" *	MAXIMUM A.S.D.DESIGN PRESSURE RATING(psf)
24"	from 24" to 101"	±90.0
30"	from 30" to 101"	±90.0
36"	from 36" to 101"	±90.0
42"	from 42" to 101"	±90.0
48"	from 48" to 101"	±90.0
54"	from 54" to 101"	±90.0
57.5"	from 57.5" to 96"	±90.0
60"	from 60" to 92.5"	±90.0
66"	from 66" to 84"	±85.0
72"	from 72" to 77"	±78.0
74.5"	from 74.5" to 74.5"	±75.5

* DETERMINATION OF MAXIMUM DAY LIGHT OPENING (D.L.O.) AT EACH END OF GLASS GIVEN "a" & "b"

SIDE	MAX. DAY LIGHT OPENING	
	(D.L.O.) Formula at Standard and Jamb mullions	(D.L.O.) Formula at head, sill and horizontal frames
MAX. D.L.O. (a) (SHORT SIDE)	"a"–5.00"	–
MAX. D.L.O. (b) (LONG SIDE)	–	"b"–5.00"

DIMENSIONS LEGEND

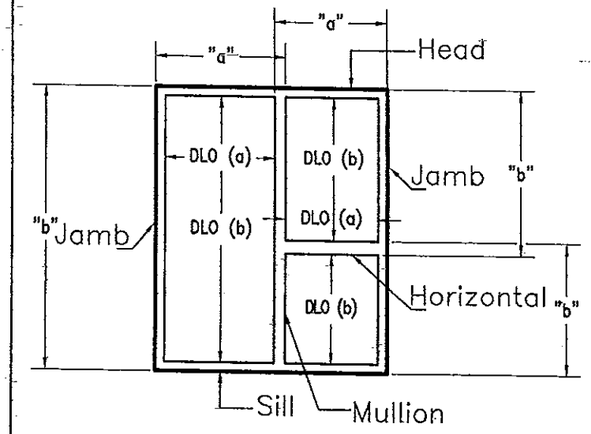

NOTES:
1. SEE SHEET 7 FOR GLAZING DETAILS AND GLASS SCHEDULE.

FLORIDA BUILDING CODE (High Velocity Hurricane Zone)

HR-250 CAPTURED CURTAIN WALL SYSTEM
LARGE MISSILE IMPACT LAMINATED GLASS

Oldcastle BuildingEnvelope™
803 Airport Rd - Terrell, TX 75160
www.OldcastleBE.com - Phone 800-869-4567

REV. No	DESCRIPTION	DATE
1	ADDENDUM #3	12/30/11
2	–	–
3	–	–
4	–	–

M.C.V./A.G. DRAWN BY:
11/18/11 DATE
11–124 DRAWING No
SHEET 8 OF 36

TILLECO INC.
TILLIT TESTING & ENGINEERING COMPANY
6355 N.W. 36th. St., Ste. 305, VIRGINIA GARDENS, FL 33166
Phone : (305)871–1530 , Fax : (305)871–1531
e–mail: tilleco@aol.com
EB–0006719
WALTER A. TILLIT Jr. P.E.
FLORIDA Lic. # 44167

©2011 TILLECO, INC.

WALTER A. TILLIT JR. LICENSE No. 44167 STATE OF FLORIDA PROFESSIONAL ENGINEER

P.E. SEAL/SIGNATURE/DATE

PRODUCT REVISED
as complying with the Florida Building Code
Acceptance No 12-0104.05
Expiration Date 01.5.2016
By Miami Dade Product Control

MIAMI–DADE COUNTY

HR-250 SINGLE SPAN MULLION

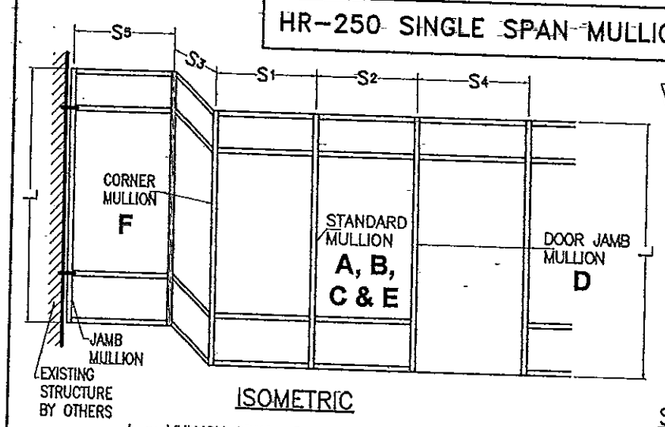

ISOMETRIC

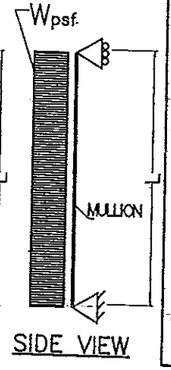

SIDE VIEW

L = MULLION SPAN ; S1, S2, S3, S4 & S5 = MULLION SPACING

EFFECTIVE SPACING $b = \frac{S_1 + S_2}{2}$ (FOR STANDARD MULLION)

EFFECTIVE SPACING $b = \frac{S_1 + S_3}{2}$ (FOR CORNER MULLION)

EFFECTIVE SPACING $b = \frac{S_2 + S_4}{2}$ (FOR DOOR JAMB MULLION)

EFFECTIVE SPACING $b = \frac{S_5}{2}$ (FOR JAMB MULLION)

CASE DEFINITIONS

CASE 1 : SINGLE SPAN UNREINFORCED STANDARD MULLION A (SEE DET. 5/21)

CASE 2 : SINGLE SPAN REINFORCED STANDARD MULLION B FULL HEIGHT. (SEE DET. 4/21)

CASE 3 : SINGLE SPAN HEAVILY REINFORCED STANDARD MULLION C FULL HEIGHT. (SEE DET. 4A/21)

CASE 4 : SINGLE SPAN REINFORCED DOOR JAMB MULLION D FULL HEIGHT. (SEE DET. 7/36)

CASE 5 : SINGLE SPAN UNREINFORCED STANDARD HEAVY MULLION E (SEE DET. 11/21)

CASE 6 : SINGLE SPAN REINFORCED CORNER MULLION F FULL HEIGHT. (SEE DET. 14/23)

* MAXIMUM A.S.D. DESIGN PRESSURE RATING FOR STANDARD, DOOR JAMB, & CORNER MULLION WILL AUTOMATICALLY QUALIFY A.S.D. DESIGN PRESSURE RATINGS FOR JAMBS FOR ANY GIVEN MULLION SPACING.
MAXIMUM JAMB SPAN (DISTANCE BETWEEN ANCHORAGE POINTS) IS 96", AND JAMB ANCHORAGE SHALL BE PERFORMED AT HORIZONTAL RAIL LOCATIONS (EXCEPT AT EXPANSION HORIZONTAL RAILS).

MAXIMUM A.S.D. DESIGN PRESSURE RATING FOR STANDARD, DOOR JAMB & CORNER MULLIONS *

MAXIMUM MULLION SPAN "L"(FT) SCHEDULE FOR A GIVEN A.S.D. DESIGN PRESSURE RATING (psf) AND A GIVEN MULLION EFFECTIVE SPACING "b"

MAXIMUM A.S.D. DESIGN PRESSURE RATING (psf)	EFFECTIVE SPACING	SINGLE SPAN MULLIONS					
		CASE 1	CASE 2	CASE 3	CASE 4	CASE 5	CASE 6
	"b" (ft-in)	MULLION: A "L" (ft-in)	MULLION: B "L" (ft-in)	MULLION: C "L" (ft-in)	MULLION: D "L" (ft-in)	MULLION: E "L" (ft-in)	MULLION: F "L" (ft-in)
60.0	3'-6"	10'-0"	12'-6"	12'-6"	12'-6"	10'-0"	12'-6"
	4'-0"	10'-0"	12'-6"	12'-6"	12'-6"	10'-0"	12'-6"
	4'-6"	9'-8"	12'-6"	12'-6"	12'-6"	10'-0"	12'-6"
	5'-0"	8'-8"	12'-6"	12'-6"	12'-6"	10'-0"	12'-6"
	5'-6"	7'-11"	12'-6"	12'-6"	12'-6"	10'-0"	12'-6"
	6'-0"	7'-3"	12'-6"	12'-6"	12'-6"	10'-0"	12'-6"
65.0	3'-6"	10'-0"	12'-6"	12'-6"	12'-6"	10'-0"	12'-6"
	4'-0"	10'-0"	12'-6"	12'-6"	12'-6"	10'-0"	12'-6"
	4'-6"	8'-11"	12'-6"	12'-6"	12'-6"	10'-0"	12'-6"
	5'-0"	8'-0"	12'-6"	12'-6"	12'-6"	10'-0"	12'-6"
	5'-6"	7'-3"	12'-6"	12'-6"	12'-6"	10'-0"	12'-6"
	6'-0"	6'-8"	12'-4"	12'-6"	12'-6"	9'-7"	12'-6"
70.0	3'-6"	-	12'-6"	12'-6"	12'-6"	10'-0"	12'-6"
	4'-0"	-	12'-6"	12'-6"	12'-6"	10'-0"	12'-6"
	4'-6"	-	12'-6"	12'-6"	12'-6"	10'-0"	12'-6"
	5'-0"	-	12'-6"	12'-6"	12'-6"	10'-0"	12'-6"
	5'-6"	-	12'-5"	12'-6"	12'-6"	9'-8"	12'-6"
	6'-0"	-	11'-11"	12'-6"	12'-6"	8'-10"	12'-6"
75.0	3'-6"	-	12'-6"	12'-6"	12'-6"	10'-0"	12'-6"
	4'-0"	-	12'-6"	12'-6"	12'-6"	10'-0"	12'-6"
	4'-6"	-	12'-6"	12'-6"	12'-6"	10'-0"	12'-6"
	5'-0"	-	12'-6"	12'-6"	12'-6"	9'-11"	12'-6"
	5'-6"	-	12'-0"	12'-6"	12'-6"	9'-0"	12'-6"
	6'-0"	-	11'-6"	12'-6"	12'-6"	8'-3"	12'-6"
76.0	3'-6"	-	12'-6"	12'-6"	12'-6"	10'-0"	12'-6"
	4'-0"	-	12'-6"	12'-6"	12'-6"	10'-0"	12'-6"
	4'-6"	-	12'-6"	12'-6"	12'-6"	10'-0"	12'-6"
	5'-0"	-	12'-6"	12'-6"	12'-6"	9'-10"	12'-6"
	5'-6"	-	11'-11"	12'-6"	12'-6"	8'-11"	12'-6"
	6'-0"	-	11'-4"	12'-4"	12'-6"	8'-2"	12'-4"
80.0	3'-6"	-	12'-6"	12'-6"	12'-6"	-	12'-6"
	4'-0"	-	12'-6"	12'-6"	12'-6"	-	12'-6"
	4'-6"	-	12'-6"	12'-6"	12'-6"	-	12'-6"
	5'-0"	-	12'-2"	12'-6"	12'-6"	-	12'-6"
	5'-6"	-	11'-8"	12'-6"	12'-6"	-	12'-6"
	6'-0"	-	10'-9"	11'-9"	12'-6"	-	11'-9"
85.0	3'-6"	-	12'-6"	12'-6"	12'-6"	-	12'-6"
	4'-0"	-	12'-6"	12'-6"	12'-6"	-	12'-6"
	4'-6"	-	12'-6"	12'-6"	12'-6"	-	12'-6"
	5'-0"	-	11'-10"	12'-6"	12'-6"	-	12'-6"
	5'-6"	-	11'-1"	12'-0"	12'-6"	-	12'-0"
	6'-0"	-	10'-2"	11'-0"	12'-4"	-	11'-0"
90.0	3'-6"	-	12'-6"	12'-6"	12'-6"	-	12'-6"
	4'-0"	-	12'-6"	12'-6"	12'-6"	-	12'-6"
	4'-6"	-	12'-1"	12'-6"	12'-6"	-	12'-6"
	5'-0"	-	11'-6"	12'-6"	12'-6"	-	12'-6"
	5'-6"	-	10'-5"	11'-4"	12'-6"	-	11'-4"
	6'-0"	-	9'-7"	10'-5"	11'-8"	-	10'-5"
95.0	3'-6"	-	-	12'-6"	-	-	-
	4'-0"	-	-	12'-6"	-	-	-
	4'-6"	-	-	12'-6"	-	-	-
	5'-0"	-	-	11'-10"	-	-	-
	5'-6"	-	-	10'-9"	-	-	-
	6'-0"	-	-	9'-10"	-	-	-
100.0	3'-6"	-	-	12'-6"	-	-	-
	4'-0"	-	-	12'-6"	-	-	-
	4'-6"	-	-	12'-6"	-	-	-
	5'-0"	-	-	11'-3"	-	-	-
	5'-6"	-	-	10'-3"	-	-	-
	6'-0"	-	-	9'-5"	-	-	-

* MAXIMUM A.S.D. DESIGN PRESSURE RATING FOR STANDARD, DOOR JAMB, & CORNER MULLION WILL AUTOMATICALLY QUALIFY A.S.D. DESIGN PRESSURE RATINGS FOR JAMBS FOR ANY GIVEN MULLION SPACING.
MAXIMUM JAMB SPAN (DISTANCE BETWEEN ANCHORAGE POINTS) IS 96", AND JAMB ANCHORAGE SHALL BE PERFORMED AT HORIZONTAL RAIL LOCATIONS (EXCEPT AT EXPANSION HORIZONTAL RAILS).

A CASE:1 LIGHT MULLION (15) + (16) — Ix= 8.959 in4, Sx= 2.6969 in3, IN TERMS OF ALUM.

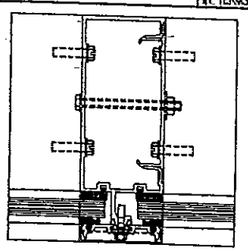

B CASE:2 LIGHT MULLION (15) + (16) W/ STEEL CHANNEL (34) — Ix= 26.744 in4, Sx= 7.389 in3, IN TERMS OF ALUM.

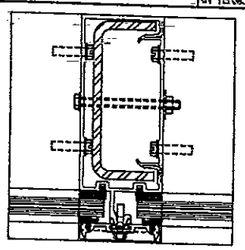

C CASE:3 LIGHT MULLION (15) + (16) W/ STEEL CHANNEL (34) & 3/8"x4" STEEL BAR (52) — Ix= 32.918 in4, Sx= 8.8608 in3, IN TERMS OF ALUM.

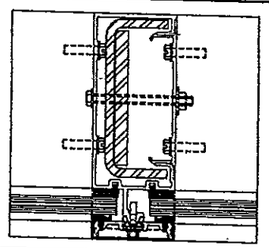

D CASE:4 LIGHT MULLION (15) + (16) W/ STEEL CHANNEL (34) & 3/4"x4" STEEL BAR (36) — Ix= 43.923 in4, Sx= 10.8318 in3, IN TERMS OF ALUM.

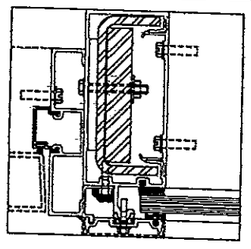

E CASE:5 HEAVY MULLION (16) + (54) — Ix= 12.850 in4, Sx= 2.336 in3, IN TERMS OF ALUM.

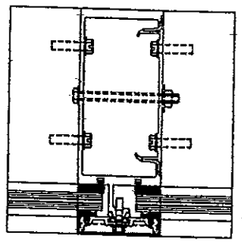

F CASE:6 CORNER MULLION (26) + (27) W/ STEEL CHANNEL (37) — Ix= 10.513 in4, Sx= 2.7174 in3, IN TERMS OF ALUM.

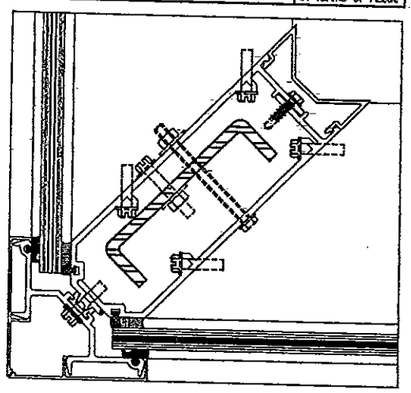

BUILDING CODE (High Velocity Hurricane Zone)

FLORIDA BUILDING CODE

HR-250 CAPTURED CURTAIN WALL SYSTEM
LARGE MISSILE IMPACT LAMINATED GLASS

Oldcastle BuildingEnvelope™
803 Airport Rd - Terrell, TX 75160
www.OldcastleBE.com - Phone 800-869-4567

REV. No	DESCRIPTION	DATE
1	OLD 10-103	11/18/11
2	-	-

REV. No	DESCRIPTION	DATE
3	-	-
4	-	-

M.C.V./A.G. DRAWN BY:

11/18/11 DATE

11-124 DRAWING No

SHEET 9 OF 36

©2011 TILTECO, INC

TILTECO INC.
TILLIT TESTING & ENGINEERING COMPANY
6355 N.W. 36th St., Ste. 308, VIRGINIA GARDENS, FL. 33166
Phone : (305)871-1530, Fax : (305)871-1531
e-mail: tilteco@aol.com
EB-0006719
WALTER A. TILLIT Jr. P.E
FLORIDA Lic. # 44167

WALTER A. TILLIT JR. LICENSE No. 44167 STATE OF FLORIDA PROFESSIONAL ENGINEER

P.E. SEAL/SIGNATURE/DATE

PRODUCT REVISED
as complying with the Florida
Building Code 12-0104.05
Acceptance No
Expiration Date 03-15-2016
By
Miami-Dade Product Control

MIAMI-DADE COUNTY

HR-250 TWIN SPAN MULLION

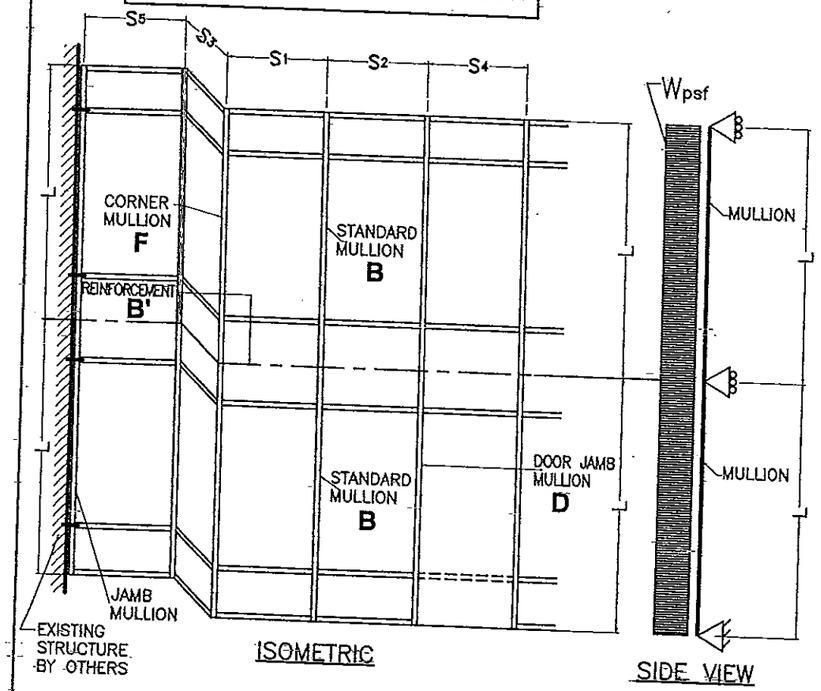

CASE DEFINITIONS

CASE 7 : TWIN SPAN REINFORCED STANDARD MULLION B FULL HEIGHT. (SEE DET. 4/21) W/ REQUIRED 76" LONG ADDITIONAL REINFORCEMENT B' AT DEAD AND WIND LOAD ANCHOR LOCATION SEE SHEET 11.

CASE 8 : TWIN SPAN REINFORCED CORNER MULLION F FULL HEIGHT. (SEE DET. 14/23)

CASE 9 : REINFORCED DOOR JAMB MULLION D FULL HEIGHT. (SEE DET. 7/36)

* MAXIMUM A.S.D. DESIGN PRESSURE RATING FOR STANDARD, DOOR JAMB, & CORNER MULLION WILL AUTOMATICALLY QUALIFY A.S.D. DESIGN PRESSURE RATINGS FOR JAMBS FOR ANY GIVEN MULLION SPACING. MAXIMUM JAMB SPAN (DISTANCE BETWEEN ANCHORAGE POINTS) IS 84", AND JAMB ANCHORAGE SHALL BE PERFORMED AT HORIZONTAL LOCATIONS.

L = MULLION SPAN ; S1, S2, S3, S4 & S5 = MULLION SPACING

EFFECTIVE SPACING $b = \frac{S_1 + S_2}{2}$ (FOR STANDARD MULLION)

EFFECTIVE SPACING $b = \frac{S_1 + S_3}{2}$ (FOR CORNER MULLION)

EFFECTIVE SPACING $b = \frac{S_2 + S_4}{2}$ (FOR DOOR JAMB MULLION)

EFFECTIVE SPACING $b = \frac{S_5}{2}$ (FOR JAMB MULLION)

B CASE:7 LIGHT MULLION (15) + (16) W/ STEEL CHANNEL (34) — Ix= 26.744 in4, Sx= 7.389 in3, IN TERMS OF ALUM.

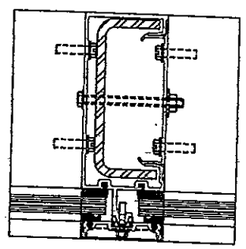

REINFORCEMENT B' CASE:7' (AT DEAD & WIND LOAD ANCHOR LOCATION) FOR B W/ 3/4"x4" STEEL BAR (36) — Ix= 43.923 in4, Sx= 10.8318 in3, IN TERMS OF ALUM.

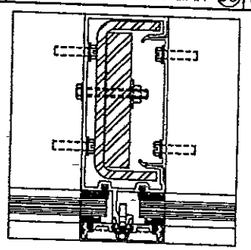

F CASE:8 CORNER MULLION (26) + (27) W/ STEEL CHANNEL (37) — Ix= 10.513 in4, Sx= 2.7174 in3, IN TERMS OF ALUM.

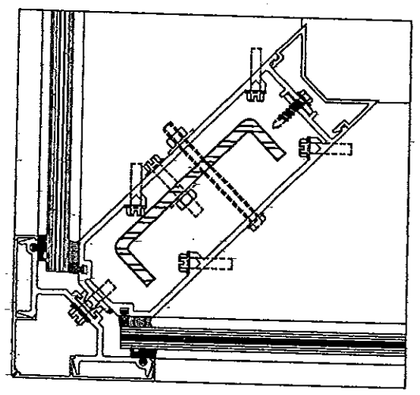

D CASE:9 ◊ LIGHT MULLION (15) + (16) W/ STEEL CHANNEL (34) & 3/4"x4" STEEL BAR (36) — Ix= 43.923 in4, Sx= 10.8318 in3, IN TERMS OF ALUM.

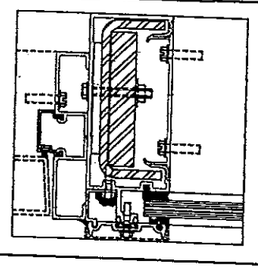

◊ THIS MULLION SHALL BE USED FULL HEIGHT, i.e. ON BOTH SPANS OF THE TWIN SPAN CONDITION.

MAXIMUM A.S.D. DESIGN PRESSURE RATING FOR STANDARD, DOOR JAMB & CORNER MULLIONS *
MAXIMUM MULLION SPAN "L"(FT) SCHEDULE FOR A GIVEN A.S.D. DESIGN PRESSURE RATING (psf) AND A GIVEN MULLION EFFECTIVE SPACING "b"

MAXIMUM A.S.D DESIGN PRESSURE RATING (psf)	EFFECTIVE SPACING "b" (ft-in)	TWIN SPAN MULLIONS CASE 7 MULLION: B "L" (ft-in)	CASE 8 MULLION: F "L" (ft-in)	CASE 9 ◊ MULLION: D "L" (ft-in)
60.0	3 ' - 6 "	12 ' - 6 "	12 ' - 6 "	12 ' - 6 "
	4 ' - 0 "	12 ' - 6 "	12 ' - 6 "	12 ' - 6 "
	4 ' - 6 "	12 ' - 6 "	12 ' - 6 "	12 ' - 6 "
	5 ' - 0 "	12 ' - 6 "	12 ' - 6 "	12 ' - 6 "
	5 ' - 6 "	12 ' - 6 "	12 ' - 6 "	12 ' - 6 "
65.0	3 ' - 6 "	12 ' - 6 "	12 ' - 6 "	12 ' - 6 "
	4 ' - 0 "	12 ' - 6 "	12 ' - 6 "	12 ' - 6 "
	4 ' - 6 "	12 ' - 6 "	12 ' - 6 "	12 ' - 6 "
	5 ' - 0 "	12 ' - 6 "	12 ' - 6 "	12 ' - 6 "
	5 ' - 6 "	12 ' - 6 "	12 ' - 6 "	12 ' - 6 "
70.0	3 ' - 6 "	12 ' - 6 "	12 ' - 6 "	12 ' - 6 "
	4 ' - 0 "	12 ' - 6 "	12 ' - 6 "	12 ' - 6 "
	4 ' - 6 "	12 ' - 6 "	12 ' - 6 "	12 ' - 6 "
	5 ' - 0 "	12 ' - 6 "	12 ' - 6 "	12 ' - 6 "
	5 ' - 6 "	12 ' - 6 "	12 ' - 6 "	12 ' - 6 "
75.0	3 ' - 6 "	12 ' - 6 "	12 ' - 6 "	12 ' - 6 "
	4 ' - 0 "	12 ' - 6 "	12 ' - 6 "	12 ' - 6 "
	4 ' - 6 "	12 ' - 6 "	12 ' - 6 "	12 ' - 6 "
	5 ' - 0 "	12 ' - 6 "	12 ' - 6 "	12 ' - 6 "
	5 ' - 6 "	12 ' - 6 "	12 ' - 6 "	12 ' - 6 "
76.0	3 ' - 6 "	12 ' - 6 "	12 ' - 6 "	12 ' - 6 "
	4 ' - 0 "	12 ' - 6 "	12 ' - 6 "	12 ' - 6 "
	4 ' - 6 "	12 ' - 6 "	12 ' - 6 "	12 ' - 6 "
	5 ' - 0 "	12 ' - 6 "	12 ' - 6 "	12 ' - 6 "
	5 ' - 6 "	12 ' - 6 "	12 ' - 6 "	12 ' - 6 "
80.0	3 ' - 6 "	12 ' - 6 "	12 ' - 6 "	12 ' - 6 "
	4 ' - 0 "	12 ' - 6 "	12 ' - 6 "	12 ' - 6 "
	4 ' - 6 "	12 ' - 6 "	12 ' - 6 "	12 ' - 6 "
	5 ' - 0 "	12 ' - 6 "	12 ' - 6 "	12 ' - 6 "
	5 ' - 6 "	12 ' - 6 "	12 ' - 6 "	12 ' - 6 "
85.0	3 ' - 6 "	12 ' - 6 "	12 ' - 6 "	12 ' - 6 "
	4 ' - 0 "	12 ' - 6 "	12 ' - 6 "	12 ' - 6 "
	4 ' - 6 "	12 ' - 6 "	12 ' - 6 "	12 ' - 6 "
	5 ' - 0 "	12 ' - 6 "	12 ' - 6 "	12 ' - 6 "
	5 ' - 6 "	12 ' - 0 "	12 ' - 3 "	12 ' - 6 "
90.0	3 ' - 6 "	12 ' - 6 "	12 ' - 6 "	12 ' - 6 "
	4 ' - 0 "	12 ' - 6 "	12 ' - 6 "	12 ' - 6 "
	4 ' - 6 "	12 ' - 6 "	12 ' - 6 "	12 ' - 6 "
	5 ' - 0 "	12 ' - 6 "	12 ' - 6 "	12 ' - 6 "
	5 ' - 6 "	11 ' - 4 "	11 ' - 11 "	12 ' - 6 "

FLORIDA BUILDING CODE (High Velocity Hurricane Zone)

HR-250 CAPTURED CURTAIN WALL SYSTEM
LARGE MISSILE IMPACT LAMINATED GLASS

Oldcastle BuildingEnvelope™
803 Airport Rd - Terrell, TX 75160
www.OldcastleBE.com - Phone 800-869-4567

REV. No	DESCRIPTION	DATE
1	OLD 10-105	11/16/11
2	-	-

REV. No	DESCRIPTION	DATE
3	-	-
4	-	-

M.G.V./A.G. DRAWN BY:
11/18/11 DATE
11-124 DRAWING No
SHEET 10 OF 36

©2011 TILTECO, INC

TILLIT TESTING & ENGINEERING COMPANY
6355 N.W. 36th. St., Ste. 305, Virginia Gardens, FL 33166
Phone : (305)871-1530 , Fax : (305)871-1531
e-mail: tilteco@aol.com
EB-0006719
WALTER A. TILLIT JR. P.E.
FLORIDA Lic. # 44167

WALTER A. TILLIT JR. LICENSE No. 44167 STATE OF FLORIDA PROFESSIONAL ENGINEER

P.E. SEAL/SIGNATURE/DATE

PRODUCT REVISED
as complying with the Florida
Building Code
Acceptance No 18010405
Expiration Date 04.5.2018
By
Miami Dade Product Control

MIAMI-DADE COUNTY

OPTIONS FOR TWIN SPAN STANDARD AND CORNER MULLIONS INSTALLATION FOR HR-250 CURTAIN WALL SYSTEM

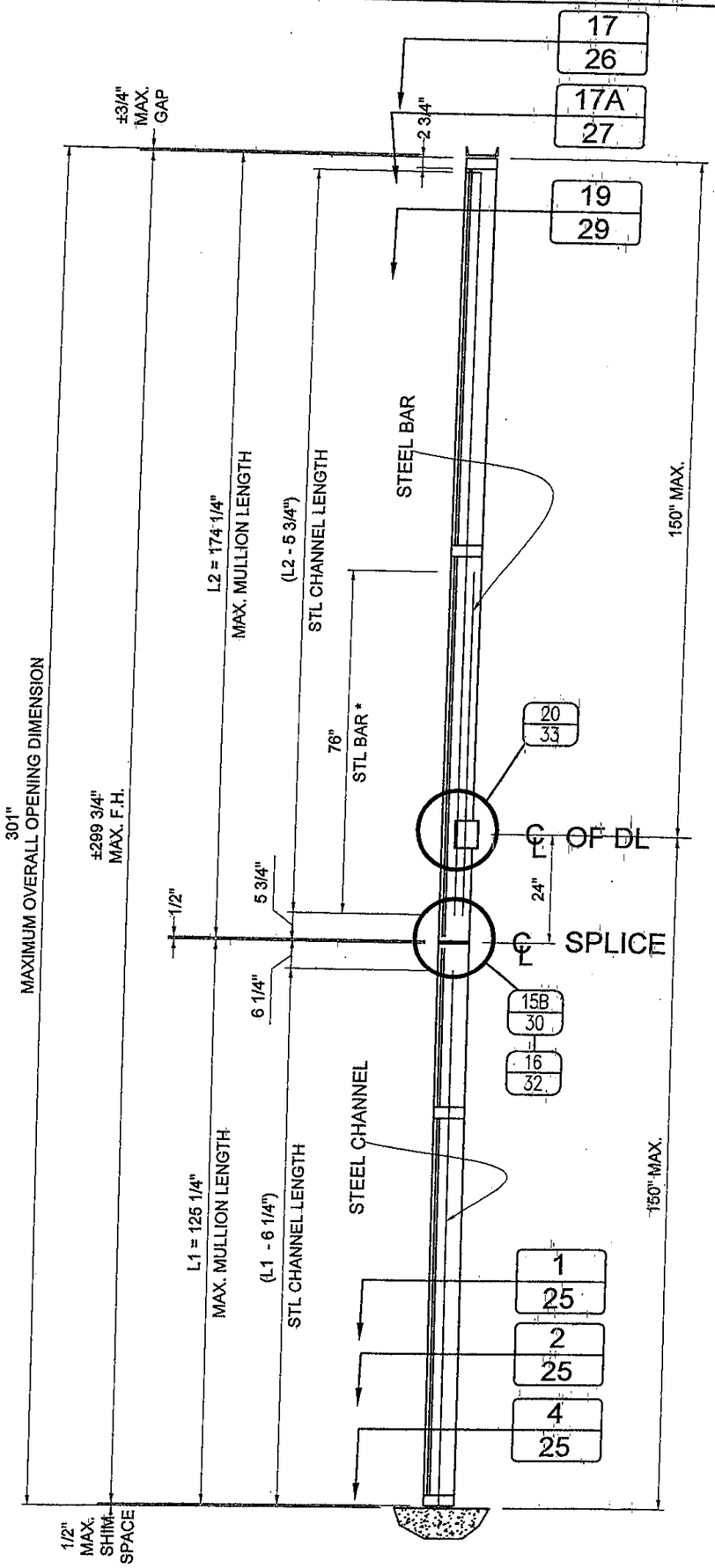

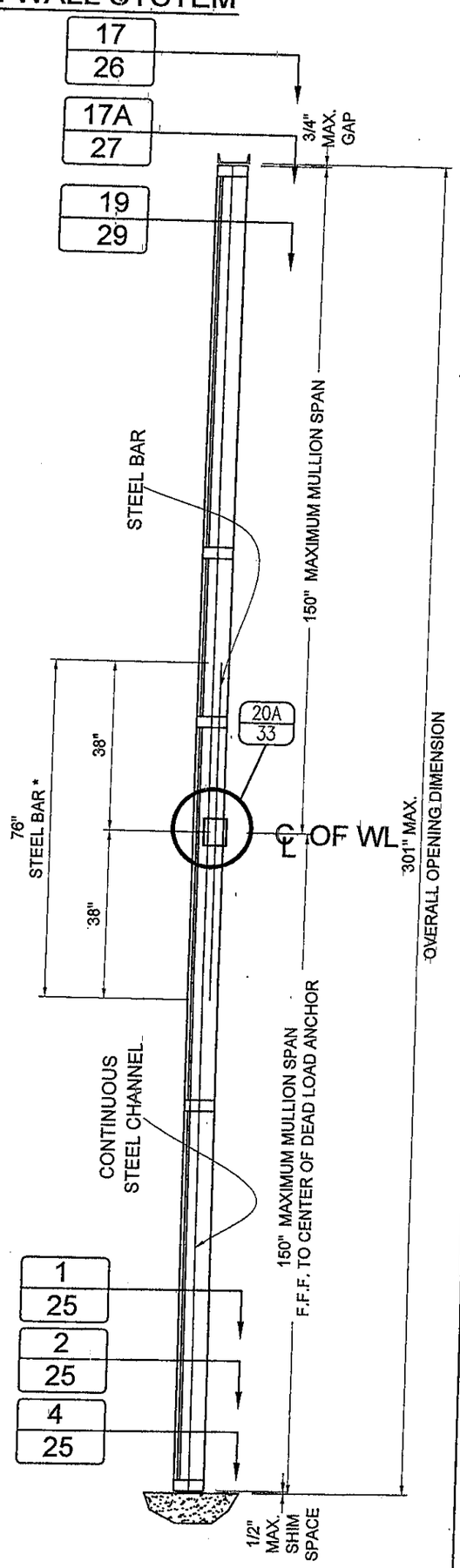

OPTION # 1
MULLION W/ SPLICE

OPTION # 2:
CONTINUOUS MULLION W/O SPLICE

* STEEL BAR NOT REQUIRED AT CORNER MULLION

PRODUCT REVISED
as complying with the Florida Building Code
Acceptance No 12-0109.05
Expiration Date Oct. 5, 2016
By Manuel Perez
Miami Dade Product Control

MIAMI–DADE COUNTY

WALTER A. TILLIT JR. LICENSE No. 44167 STATE OF FLORIDA PROFESSIONAL ENGINEER

P.E. SEAL/SIGNATURE/DATE

FLORIDA BUILDING CODE (High Velocity Hurricane Zone)

©2011 TILTECO, INC.

TILTECO INC.
TILLIT TESTING & ENGINEERING COMPANY
6355 N.W. 36th. St., Ste. 305, VIRGINIA GARDENS, FL 33166
Phone : (305)871-1530 . Fax : (305)871-1531
e-mail: titeco@aol.com
EB-0006719
WALTER A. TILLIT Jr., P.E.
FLORIDA Lic. # 44167

HR-250 CAPTURED CURTAIN WALL SYSTEM
LARGE MISSILE IMPACT LAMINATED GLASS

Oldcastle BuildingEnvelope™
803 Airport Rd - Terrell, TX 75160
www.OldcastleBE.com - Phone 800-869-4567

M.C.V./A.Ç.
DRAWN BY:

11/18/11
DATE

11–124
DRAWING No

REV. No	DESCRIPTION	DATE	REV. No	DESCRIPTION	DATE
1	OLD 10-103	11/18/11	3	–	–
2	–	–	4	–	–

MAXIMUM A.S.D. DESIGN PRESSURE RATING FOR SINGLE SPAN (HEAD & SILL) & TWIN SPAN (SILL ONLY) MULLION CONNECTIONS (SEE ALSO SHEET 13)

SINGLE SPAN MULLION: HEAD & SILL CONNECTION *

MAXIMUM MULLION SPAN "L" (ft-in)	EFFECTIVE SPACING "b" (ft-in)	MAXIMUM A.S.D. DESIGN PRESSURE RATING (psf) POURED CONCRETE (Min. f'c = 3ksi) SUBSTRATE FASTENERS TYPES A	B	C	1/4" Min. THK ASTM A-36 STEEL SUBSTRATE FASTENERS D
8 '- 5 "	3 '- 6 "	100.0	100.0	100.0	100.0
	4 '- 0 "	100.0	100.0	100.0	100.0
	4 '- 6 "	100.0	100.0	100.0	100.0
	5 '- 0 "	100.0	100.0	100.0	100.0
	5 '- 6 "	100.0	100.0	100.0	100.0
	6 '- 0 "	100.0	100.0	100.0	100.0
8 '- 6 "	3 '- 6 "	100.0	100.0	100.0	100.0
	4 '- 0 "	100.0	100.0	100.0	100.0
	4 '- 6 "	100.0	100.0	100.0	100.0
	5 '- 0 "	100.0	100.0	100.0	100.0
	5 '- 6 "	100.0	100.0	100.0	100.0
	6 '- 0 "	100.0	100.0	100.0	100.0
9 '- 0 "	3 '- 6 "	100.0	100.0	100.0	100.0
	4 '- 0 "	100.0	100.0	100.0	100.0
	4 '- 6 "	100.0	100.0	100.0	100.0
	5 '- 0 "	100.0	100.0	100.0	100.0
	5 '- 6 "	100.0	100.0	100.0	100.0
	6 '- 0 "	100.0	100.0	100.0	100.0
9 '- 6 "	3 '- 6 "	100.0	100.0	100.0	100.0
	4 '- 0 "	100.0	100.0	100.0	100.0
	4 '- 6 "	100.0	100.0	100.0	100.0
	5 '- 0 "	100.0	100.0	100.0	100.0
	5 '- 6 "	100.0	100.0	100.0	100.0
	6 '- 0 "	100.0	100.0	97.1	100.0
10 '- 0 "	3 '- 6 "	100.0	100.0	100.0	100.0
	4 '- 0 "	100.0	100.0	100.0	100.0
	4 '- 6 "	100.0	100.0	100.0	100.0
	5 '- 0 "	100.0	100.0	100.0	100.0
	5 '- 6 "	100.0	100.0	100.0	100.0
	6 '- 0 "	100.0	100.0	92.2	100.0
10 '- 6 "	3 '- 6 "	100.0	100.0	100.0	100.0
	4 '- 0 "	100.0	100.0	100.0	100.0
	4 '- 6 "	100.0	100.0	100.0	100.0
	5 '- 0 "	100.0	100.0	100.0	100.0
	5 '- 6 "	100.0	100.0	95.8	100.0
	6 '- 0 "	100.0	100.0	87.8	100.0
11 '- 0 "	3 '- 6 "	100.0	100.0	100.0	100.0
	4 '- 0 "	100.0	100.0	100.0	100.0
	4 '- 6 "	100.0	100.0	100.0	100.0
	5 '- 0 "	100.0	100.0	100.0	100.0
	5 '- 6 "	100.0	100.0	91.5	100.0
	6 '- 0 "	100.0	100.0	83.8	99.6
11 '- 6 "	3 '- 6 "	100.0	100.0	100.0	100.0
	4 '- 0 "	100.0	100.0	100.0	100.0
	4 '- 6 "	100.0	100.0	100.0	100.0
	5 '- 0 "	100.0	100.0	96.2	100.0
	5 '- 6 "	100.0	100.0	87.5	100.0
	6 '- 0 "	100.0	100.0	80.2	95.3
12 '- 0 "	3 '- 6 "	100.0	100.0	100.0	100.0
	4 '- 0 "	100.0	100.0	100.0	100.0
	4 '- 6 "	100.0	100.0	100.0	100.0
	5 '- 0 "	100.0	100.0	92.2	100.0
	5 '- 6 "	100.0	100.0	83.8	99.6
	6 '- 0 "	97.4	96.4	76.8	91.3
12 '- 6 "	3 '- 6 "	100.0	100.0	100.0	100.0
	4 '- 0 "	100.0	100.0	100.0	100.0
	4 '- 6 "	100.0	100.0	98.4	100.0
	5 '- 0 "	100.0	100.0	88.5	100.0
	5 '- 6 "	100.0	100.0	80.5	95.7
	6 '- 0 "	93.5	92.6	73.8	87.7

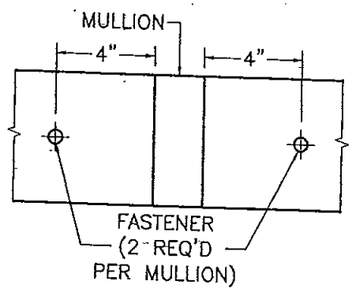

SCHEMATIC CONNECTION DETAIL *

* SEE CONNECTION DETAILS ON SHEETS 18 & 25 FOR FASTENERS QUANTITY & LOCATIONS AT MULLION.

TWIN SPAN MULLION: SILL CONNECTION *

MAXIMUM MULLION SPAN "L" (ft-in)	EFFECTIVE SPACING "b" (ft-in)	MAXIMUM A.S.D. DESIGN PRESSURE RATING (psf) POURED CONCRETE (Min. f'c = 3ksi) SUBSTRATE FASTENERS TYPES A	B	C	1/4" Min. THK ASTM A-36 STEEL SUBSTRATE FASTENERS D
8 '- 5 "	3 '- 6 "	90.0	90.0	90.0	90.0
	4 '- 0 "	90.0	90.0	90.0	90.0
	4 '- 6 "	90.0	90.0	90.0	90.0
	5 '- 0 "	90.0	90.0	90.0	90.0
	5 '- 6 "	90.0	90.0	90.0	90.0
	6 '- 0 "	90.0	90.0	90.0	90.0
8 '- 6 "	3 '- 6 "	90.0	90.0	90.0	90.0
	4 '- 0 "	90.0	90.0	90.0	90.0
	4 '- 6 "	90.0	90.0	90.0	90.0
	5 '- 0 "	90.0	90.0	90.0	90.0
	5 '- 6 "	90.0	90.0	90.0	90.0
	6 '- 0 "	90.0	90.0	90.0	90.0
9 '- 0 "	3 '- 6 "	90.0	90.0	90.0	90.0
	4 '- 0 "	90.0	90.0	90.0	90.0
	4 '- 6 "	90.0	90.0	90.0	90.0
	5 '- 0 "	90.0	90.0	90.0	90.0
	5 '- 6 "	90.0	90.0	90.0	90.0
	6 '- 0 "	90.0	90.0	90.0	90.0
9 '- 6 "	3 '- 6 "	90.0	90.0	90.0	90.0
	4 '- 0 "	90.0	90.0	90.0	90.0
	4 '- 6 "	90.0	90.0	90.0	90.0
	5 '- 0 "	90.0	90.0	90.0	90.0
	5 '- 6 "	90.0	90.0	90.0	90.0
	6 '- 0 "	90.0	90.0	90.0	90.0
10 '- 0 "	3 '- 6 "	90.0	90.0	90.0	90.0
	4 '- 0 "	90.0	90.0	90.0	90.0
	4 '- 6 "	90.0	90.0	90.0	90.0
	5 '- 0 "	90.0	90.0	90.0	90.0
	5 '- 6 "	90.0	90.0	90.0	90.0
	6 '- 0 "	90.0	90.0	90.0	90.0
10 '- 6 "	3 '- 6 "	90.0	90.0	90.0	90.0
	4 '- 0 "	90.0	90.0	90.0	90.0
	4 '- 6 "	90.0	90.0	90.0	90.0
	5 '- 0 "	90.0	90.0	90.0	90.0
	5 '- 6 "	90.0	90.0	90.0	90.0
	6 '- 0 "	90.0	90.0	87.8	90.0
11 '- 0 "	3 '- 6 "	90.0	90.0	90.0	90.0
	4 '- 0 "	90.0	90.0	90.0	90.0
	4 '- 6 "	90.0	90.0	90.0	90.0
	5 '- 0 "	90.0	90.0	90.0	90.0
	5 '- 6 "	90.0	90.0	90.0	90.0
	6 '- 0 "	90.0	90.0	83.8	90.0
11 '- 6 "	3 '- 6 "	90.0	90.0	90.0	90.0
	4 '- 0 "	90.0	90.0	90.0	90.0
	4 '- 6 "	90.0	90.0	90.0	90.0
	5 '- 0 "	90.0	90.0	90.0	90.0
	5 '- 6 "	90.0	90.0	87.5	90.0
	6 '- 0 "	90.0	90.0	80.2	90.0
12 '- 0 "	3 '- 6 "	90.0	90.0	90.0	90.0
	4 '- 0 "	90.0	90.0	90.0	90.0
	4 '- 6 "	90.0	90.0	90.0	90.0
	5 '- 0 "	90.0	90.0	90.0	90.0
	5 '- 6 "	90.0	90.0	83.8	90.0
	6 '- 0 "	90.0	90.0	76.8	90.0
12 '- 6 "	3 '- 6 "	90.0	90.0	90.0	90.0
	4 '- 0 "	90.0	90.0	90.0	90.0
	4 '- 6 "	90.0	90.0	90.0	90.0
	5 '- 0 "	90.0	90.0	88.5	90.0
	5 '- 6 "	90.0	90.0	80.5	90.0
	6 '- 0 "	90.0	90.0	73.8	87.7

B FASTENERS TYPES REQUIREMENTS

A - 1/2"Ø HILTI KWIK BOLT TZ ANCHOR W/ 3 1/4" Min. EMBEDMENT INTO 8" Min. THICK POURED CONCRETE (Min. f'c = 3 ksi) BEYOND ANY FINISH MATERIAL, W/ 6" MIN. EDGE DISTANCE.

B - 1/2"Ø HILTI KWIK BOLT TZ ANCHOR W/ 3 1/4" Min. EMBEDMENT INTO 6" Min. THICK POURED CONCRETE (Min. f'c = 3 ksi) BEYOND ANY FINISH MATERIAL, W/ 7 1/2" MIN. EDGE DISTANCE.

C - 1/2"Ø HILTI HUS-H SCREW ANCHOR W/ 3" Min. EMBEDMENT INTO 4" Min. THICK POURED CONCRETE (Min. f'c = 3 ksi) BEYOND ANY FINISH MATERIAL, W/ 3 3/4" MIN. EDGE DISTANCE.

D - 1/2"Ø-13 TYPE "F" GRADE 5 BOLT TO 1/4" MIN. THK. ASTM A-36 STEEL W/ 1" Min. EDGE DISTANCE OR 1/2"Ø-13 SAE GALVANIZED STEEL GRADE 5 HHB THRU BOLT W/ NUT & LOCK WASHER TO 1/4" Min. THK. ASTM A-36 STEEL W/ 1" MIN. EDGE DISTANCE.

FLORIDA BUILDING CODE (High Velocity Hurricane Zone)

HR-250 CAPTURED CURTAIN WALL SYSTEM
LARGE MISSILE IMPACT LAMINATED GLASS

Oldcastle BuildingEnvelope™
803 Airport Rd - Terrell, TX 75160
www.OldcastleBE.com - Phone 800-869-4567

REV. No	DESCRIPTION	DATE
1	OLD 10-103	11/18/11
2	--	--

REV. No	DESCRIPTION	DATE
3	-	-
4	-	-

M.C.V./A.G. DRAWN BY:
11/18/11 DATE
11-124 DRAWING No
SHEET 12 OF 36

©2011 TILLECO, INC

TILLIT TESTING & ENGINEERING COMPANY
6335 N.W. 36th. St. Ste. 305, VIRGINIA GARDENS, FL 33166
Phone : (305)871-1530 . Fax : (305)871-1531
e-mail: tilteco@aol.com
EB-0006719
WALTER A. TILLIT Jr. P.E.
FLORIDA Lic. # 44167

WALTER A. TILLIT JR. LICENSE No. 44167 STATE OF FLORIDA PROFESSIONAL ENGINEER

P.E. SEAL/SIGNATURE/DATE

PRODUCT REVISED
as complying with the Florida
Building Code
Acceptance No 12-0103.05
Expiration Date 5-15-2016
By
Miami Dade Product Control

MIAMI-DADE COUNTY

MAXIMUM A.S.D. DESIGN PRESSURE RATING FOR TWIN SPAN MULLION HEAD ANCHOR CONNECTIONS

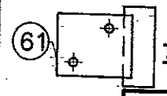

TWIN SPAN MULLION : HEAD CONNECTION *
W/ (1) 6"x 3 1/2" x 4 1/4" LONG ANCHOR #61

TYPE 1 **		MAXIMUM A.S.D. DESIGN PRESSURE RATING (psf)			
MAXIMUM MULLION SPAN	EFFECTIVE SPACING	POURED CONCRETE (Min. f'c = 3ksi) SUBSTRATE			1/4" Min. THK ASTM A-36 STEEL SUBSTRATE
		FASTENERS TYPES			FASTENERS
"L" (ft-in)	"b" (ft-in)	A	B	C	D
8 '- 5 "	3 '- 6 "	66.3	69.2	58.9	90.0
	4 '- 0 "	58.0	60.5	51.5	90.0
	4 '- 6 "	51.6	53.8	45.8	90.0
	5 '- 0 "	46.4	48.4	41.2	90.0
	5 '- 6 "	42.2	44.0	37.5	90.0
8 '- 6 "	3 '- 6 "	65.6	68.5	58.3	90.0
	4 '- 0 "	57.4	59.9	51.0	90.0
	4 '- 6 "	51.1	53.3	45.4	90.0
	5 '- 0 "	46.0	48.0	40.8	90.0
	5 '- 6 "	41.8	43.6	37.1	90.0
9 '- 0 "	3 '- 6 "	62.0	64.7	55.1	90.0
	4 '- 0 "	54.3	56.6	48.2	90.0
	4 '- 6 "	48.2	50.3	42.8	90.0
	5 '- 0 "	43.4	45.3	38.6	90.0
	5 '- 6 "	39.5	41.2	35.1	90.0
9 '- 6 "	3 '- 6 "	58.7	61.3	52.2	90.0
	4 '- 0 "	51.4	53.6	45.7	90.0
	4 '- 6 "	45.7	47.7	40.6	90.0
	5 '- 0 "	41.1	42.9	36.5	90.0
	5 '- 6 "	37.4	39.0	33.2	90.0
10 '- 0 "	3 '- 6 "	55.8	58.2	49.6	90.0
	4 '- 0 "	48.8	50.9	43.4	90.0
	4 '- 6 "	43.4	45.3	38.6	90.0
	5 '- 0 "	39.1	40.8	34.7	90.0
	5 '- 6 "	35.5	37.1	31.6	90.0
10 '- 6 "	3 '- 6 "	53.1	55.5	47.2	90.0
	4 '- 0 "	46.5	48.5	41.3	90.0
	4 '- 6 "	41.3	43.1	36.7	90.0
	5 '- 0 "	37.2	38.8	33.1	90.0
	5 '- 6 "	33.8	35.3	30.0	90.0
11 '- 0 "	3 '- 6 "	50.7	52.9	45.1	90.0
	4 '- 0 "	44.4	46.3	39.4	90.0
	4 '- 6 "	39.5	41.2	35.1	90.0
	5 '- 0 "	35.5	37.1	31.6	90.0
	5 '- 6 "	32.3	33.7	28.7	90.0
11 '- 6 "	3 '- 6 "	48.5	50.6	43.1	90.0
	4 '- 0 "	42.5	44.3	37.7	90.0
	4 '- 6 "	37.7	39.4	33.5	90.0
	5 '- 0 "	34.0	35.4	30.2	90.0
	5 '- 6 "	30.9	32.2	27.4	90.0
12 '- 0 "	3 '- 6 "	46.5	48.5	41.3	90.0
	4 '- 0 "	40.7	42.5	36.2	90.0
	4 '- 6 "	36.2	37.7	32.1	90.0
	5 '- 0 "	32.6	34.0	28.9	90.0
	5 '- 6 "	29.6	30.9	26.3	87.7
12 '- 6 "	3 '- 6 "	44.6	46.6	39.7	90.0
	4 '- 0 "	39.1	40.8	34.7	90.0
	4 '- 6 "	34.7	36.2	30.9	90.0
	5 '- 0 "	31.2	32.6	27.8	90.0
	5 '- 6 "	28.4	29.6	25.2	84.2

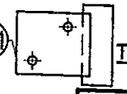

TWIN SPAN MULLION : HEAD CONNECTION *
W/ (1) 6"x 3 1/2" x 4 1/4" LONG ANCHOR #61

TYPE 2 **		MAXIMUM A.S.D. DESIGN PRESSURE RATING (psf)			
MAXIMUM MULLION SPAN	EFFECTIVE SPACING	POURED CONCRETE (Min. f'c = 3ksi) SUBSTRATE			1/4" Min. THK ASTM A-36 STEEL SUBSTRATE
		FASTENERS TYPES			FASTENERS
"L" (ft-in)	"b" (ft-in)	A	B	C	D
8 '- 5 "	3 '- 6 "	59.2	61.8	52.6	90.0
	4 '- 0 "	51.8	54.0	46.0	90.0
	4 '- 6 "	46.0	48.0	40.9	90.0
	5 '- 0 "	41.4	43.2	36.8	90.0
	5 '- 6 "	37.7	39.3	33.5	90.0
8 '- 6 "	3 '- 6 "	58.6	61.2	52.1	90.0
	4 '- 0 "	51.3	53.5	45.6	90.0
	4 '- 6 "	45.6	47.6	40.5	90.0
	5 '- 0 "	41.0	42.8	36.5	90.0
	5 '- 6 "	37.3	38.9	33.1	90.0
9 '- 0 "	3 '- 6 "	55.4	57.8	49.2	90.0
	4 '- 0 "	48.4	50.5	43.0	90.0
	4 '- 6 "	43.1	44.9	38.3	90.0
	5 '- 0 "	38.8	40.4	34.4	90.0
	5 '- 6 "	35.2	36.8	31.3	90.0
9 '- 6 "	3 '- 6 "	52.4	54.7	46.6	90.0
	4 '- 0 "	45.9	47.9	40.8	90.0
	4 '- 6 "	40.8	42.6	36.2	90.0
	5 '- 0 "	36.7	38.3	32.6	90.0
	5 '- 6 "	33.4	34.8	29.7	90.0
10 '- 0 "	3 '- 6 "	49.8	52.0	44.3	90.0
	4 '- 0 "	43.6	45.5	38.7	90.0
	4 '- 6 "	38.8	40.4	34.4	90.0
	5 '- 0 "	34.9	36.4	31.0	90.0
	5 '- 6 "	31.7	33.1	28.2	90.0
10 '- 6 "	3 '- 6 "	47.4	49.5	42.2	90.0
	4 '- 0 "	41.5	43.3	36.9	90.0
	4 '- 6 "	36.9	38.5	32.8	90.0
	5 '- 0 "	33.2	34.7	29.5	90.0
	5 '- 6 "	30.2	31.5	26.8	89.5
11 '- 0 "	3 '- 6 "	45.3	47.3	40.2	90.0
	4 '- 0 "	39.6	41.4	35.2	90.0
	4 '- 6 "	35.2	36.8	31.3	90.0
	5 '- 0 "	31.7	33.1	28.2	90.0
	5 '- 6 "	28.8	30.1	25.6	85.4
11 '- 6 "	3 '- 6 "	43.3	45.2	38.5	90.0
	4 '- 0 "	37.9	39.6	33.7	90.0
	4 '- 6 "	33.7	35.2	29.9	90.0
	5 '- 0 "	30.3	31.6	26.9	89.9
	5 '- 6 "	27.6	28.8	24.5	81.7
12 '- 0 "	3 '- 6 "	41.5	43.3	36.9	90.0
	4 '- 0 "	36.3	37.9	32.3	90.0
	4 '- 6 "	32.3	33.7	28.7	90.0
	5 '- 0 "	29.1	30.3	25.8	86.1
	5 '- 6 "	26.4	27.6	23.5	78.3
12 '- 6 "	3 '- 6 "	39.9	41.6	35.4	90.0
	4 '- 0 "	34.9	36.4	31.0	90.0
	4 '- 6 "	31.0	32.3	27.5	90.0
	5 '- 0 "	27.9	29.1	24.8	82.7
	5 '- 6 "	25.4	26.5	22.5	75.2

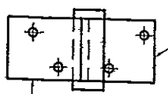

TWIN SPAN MULLION (INCLUDING CORNER MULLION): HEAD CONNECTION *
W/ (2) 6"x 3 1/2" x 4 1/4" LONG ANCHOR #61

TYPES 1 & 2 **		MAXIMUM A.S.D. DESIGN PRESSURE RATING (psf)			
MAXIMUM MULLION SPAN	EFFECTIVE SPACING	POURED CONCRETE (Min. f'c = 3ksi) SUBSTRATE			1/4" Min. THK ASTM A-36 STEEL SUBSTRATE
		FASTENERS TYPES			FASTENERS
"L" (ft-in)	"b" (ft-in)	A	B	C	D
8 '- 5 "	3 '- 6 "	90.0	90.0	90.0	90.0
	4 '- 0 "	90.0	90.0	90.0	90.0
	4 '- 6 "	90.0	90.0	90.0	90.0
	5 '- 0 "	90.0	90.0	90.0	90.0
	5 '- 6 "	90.0	90.0	90.0	90.0
8 '- 6 "	3 '- 6 "	90.0	90.0	90.0	90.0
	4 '- 0 "	90.0	90.0	90.0	90.0
	4 '- 6 "	90.0	90.0	90.0	90.0
	5 '- 0 "	90.0	90.0	90.0	90.0
	5 '- 6 "	90.0	90.0	90.0	90.0
9 '- 0 "	3 '- 6 "	90.0	90.0	90.0	90.0
	4 '- 0 "	90.0	90.0	90.0	90.0
	4 '- 6 "	90.0	90.0	90.0	90.0
	5 '- 0 "	90.0	90.0	90.0	90.0
	5 '- 6 "	90.0	90.0	90.0	90.0
9 '- 6 "	3 '- 6 "	90.0	90.0	90.0	90.0
	4 '- 0 "	90.0	90.0	90.0	90.0
	4 '- 6 "	90.0	90.0	90.0	90.0
	5 '- 0 "	90.0	90.0	90.0	90.0
	5 '- 6 "	90.0	90.0	90.0	90.0
10 '- 0 "	3 '- 6 "	90.0	90.0	90.0	90.0
	4 '- 0 "	90.0	90.0	90.0	90.0
	4 '- 6 "	90.0	90.0	90.0	90.0
	5 '- 0 "	90.0	90.0	90.0	90.0
	5 '- 6 "	90.0	90.0	90.0	90.0
10 '- 6 "	3 '- 6 "	90.0	90.0	90.0	90.0
	4 '- 0 "	90.0	90.0	90.0	90.0
	4 '- 6 "	90.0	90.0	90.0	90.0
	5 '- 0 "	90.0	90.0	90.0	90.0
	5 '- 6 "	90.0	90.0	90.0	90.0
11 '- 0 "	3 '- 6 "	90.0	90.0	90.0	90.0
	4 '- 0 "	90.0	90.0	90.0	90.0
	4 '- 6 "	90.0	90.0	90.0	90.0
	5 '- 0 "	90.0	90.0	90.0	90.0
	5 '- 6 "	90.0	90.0	90.0	90.0
11 '- 6 "	3 '- 6 "	90.0	90.0	90.0	90.0
	4 '- 0 "	90.0	90.0	90.0	90.0
	4 '- 6 "	90.0	90.0	90.0	90.0
	5 '- 0 "	90.0	90.0	90.0	90.0
	5 '- 6 "	90.0	90.0	90.0	90.0
12 '- 0 "	3 '- 6 "	90.0	90.0	90.0	90.0
	4 '- 0 "	90.0	90.0	90.0	90.0
	4 '- 6 "	90.0	90.0	90.0	90.0
	5 '- 0 "	90.0	90.0	90.0	90.0
	5 '- 6 "	90.0	90.0	90.0	90.0
12 '- 6 "	3 '- 6 "	90.0	90.0	90.0	90.0
	4 '- 0 "	90.0	90.0	90.0	90.0
	4 '- 6 "	90.0	90.0	90.0	90.0
	5 '- 0 "	90.0	90.0	90.0	90.0
	5 '- 6 "	90.0	90.0	90.0	90.0

*SEE CONNECTION DETAILS ON SHEETS 26 & 27 FOR FASTENERS QUANTITY & LOCATIONS AT MULLION. ₸

**
TYPE 1 CONNECTION:

CORRESPONDS TO CONTINUOUS TWIN SPAN MULLION INSTALLATIONS.

TYPE 2 CONNECTION:

CORRESPONDS TO SPLICED TWIN SPAN MULLION INSTALLATIONS.

Ⓑ FASTENERS TYPES REQUIREMENTS

A - 1/2"Ø HILTI KWIK BOLT TZ ANCHOR W/ 3 1/4" Min. EMBEDMENT INTO 8" Min. THICK POURED CONCRETE (Min. f'c = 3 ksi) BEYOND ANY FINISH MATERIAL, W/ 6" MIN. EDGE DISTANCE.

B - 1/2"Ø HILTI KWIK BOLT TZ ANCHOR W/ 3 1/4" Min. EMBEDMENT INTO 6" Min. THICK POURED CONCRETE (Min. f'c = 3 ksi) BEYOND ANY FINISH MATERIAL, W/ 7 1/2" MIN. EDGE DISTANCE.

C - 1/2"Ø HILTI HUS-H SCREW ANCHOR W/ 3" Min. EMBEDMENT INTO 4" Min. THICK POURED CONCRETE (Min. f'c = 3 ksi) BEYOND ANY FINISH MATERIAL, W/ 3 3/4" MIN. EDGE DISTANCE.

D - 1/2"Ø-13 TYPE "F" GRADE 5 BOLT TO 1/4" MIN. THK. ASTM A-36 STEEL W/ 1" MIN. EDGE DISTANCE OR 1/2"Ø -13 SAE GALVANIZED STEEL GRADE 5 HHB THRU BOLT W/ NUT & LOCK WASHER TO 1/4" MIN. THK. ASTM A-36 STEEL W/ 1" MIN. EDGE DISTANCE.

₸ MAX. PRESSURE RATING FOR JAMB CONNECTION @ HEAD W/ ANCHOR Ⓑ IS ± 100 psf FOR SINGLE SPAN CURTAIN WALL AND ±90 psf FOR TWIN SPAN CURTAIN WALL, VALID FOR ALL EFFECTIVE WIDTHS. SEE CONNECTION DETAILS ON SHEET 28 FOR FASTENERS QUANTITY AND LOCATION AT JAMB.

FLORIDA BUILDING CODE (High Velocity Hurricane Zone)

©2011 TILTECO, INC.

TILLIT TESTING & ENGINEERING COMPANY
6355 N.W. 36th St., Ste. 305, VIRGINIA GARDENS, FL 33166
Phone : (305)871-1530 . Fax : (305)871-1531
e-mail: tilteco@bellsouth.com
EB-0006719
WALTER A. TILLIT Jr. P.E.
FLORIDA Lic. # 44167

HR-250 CAPTURED CURTAIN WALL SYSTEM
LARGE MISSILE IMPACT LAMINATED GLASS

Oldcastle BuildingEnvelope™
803 Airport Rd - Terrell, TX 75160
www.OldcastleBE.com - Phone 800-869-4567

REV. No.	DESCRIPTION	DATE
1	OLD 10-103	11/18/11
2	-	-

REV. No.	DESCRIPTION	DATE
3	-	-
4	-	-

M.C.V./A.G. DRAWN BY:

11/18/11 DATE

11-124 DRAWING No

SHEET 13 OF 36

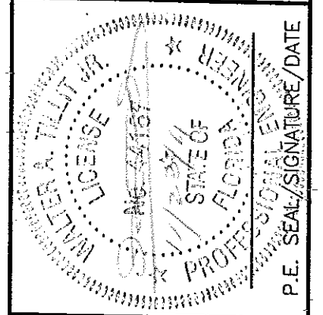

P.E. SEAL/SIGNATURE/DATE

PRODUCT REVISED
as complying with the Florida
Building Code
Acceptance No 12-0109.05
Expiration Date 12.5.2016
By
Miami Dade Product Control

MIAMI-DADE COUNTY

MAXIMUM A.S.D. DESIGN PRESSURE RATING FOR JAMBS AT SINGLE SPAN CURTAIN WALL FASTENED TO EXISTING STRUCTURE W/ 3/8"Ø FASTENERS (SEE ALSO SHEETS 15, 16 & 17)

OPTION #1 : 2 FASTENERS CONNECTION

MAXIMUM MULLION SPAN "L" (ft-in)	EFFECTIVE SPACING b = S_1/2 "b" ft-in	MAXIMUM A.S.D. DESIGN PRESSURE RATING (psf)					
		POURED CONCRETE (Min. fc = 3ksi) SUBSTRATE			GROUT FILLED CONCRETE BLOCK SUBSTRATE		1/4" Min. THK ASTM A-36 STEEL SUBSTRATE
		FASTENER TYPES			FASTENER TYPES		FASTENER
		E	F	G	H	I	J
8 '- 5 "	1 '- 9 "	100.0	100.0	100.0	100.0	100.0	100.0
	2 '- 0 "	100.0	100.0	93.3	100.0	93.3	100.0
	2 '- 3 "	100.0	100.0	82.9	100.0	82.9	100.0
	2 '- 6 "	91.5	91.5	74.6	91.5	74.6	100.0
	2 '- 9 "	83.2	83.2	67.8	83.2	67.8	94.1
	3 '- 3 "	70.4	70.4	57.4	70.4	57.4	79.7
8 '- 6 "	1 '- 9 "	100.0	100.0	100.0	100.0	100.0	100.0
	2 '- 0 "	100.0	100.0	92.4	100.0	92.4	100.0
	2 '- 3 "	100.0	100.0	82.1	100.0	82.1	100.0
	2 '- 6 "	90.6	90.6	73.9	90.6	73.9	100.0
	2 '- 9 "	82.3	82.3	67.2	82.3	67.2	93.2
	3 '- 3 "	69.7	69.7	56.8	69.7	56.8	78.9
9 '- 0 "	1 '- 9 "	100.0	100.0	99.7	100.0	99.7	100.0
	2 '- 0 "	100.0	100.0	87.2	100.0	87.2	100.0
	2 '- 3 "	95.0	95.0	77.5	95.0	77.5	100.0
	2 '- 6 "	85.5	85.5	69.8	85.5	69.8	96.8
	2 '- 9 "	77.8	77.8	63.4	77.8	63.4	88.0
	3 '- 3 "	65.8	65.8	53.7	65.8	53.7	74.5
9 '- 6 "	1 '- 9 "	100.0	100.0	94.5	100.0	94.5	100.0
	2 '- 0 "	100.0	100.0	82.6	100.0	82.6	100.0
	2 '- 3 "	90.0	90.0	73.5	90.0	73.5	100.0
	2 '- 6 "	81.0	81.0	66.1	81.0	66.1	91.7
	2 '- 9 "	73.7	73.7	60.1	73.7	60.1	83.4
	3 '- 3 "	62.3	62.3	50.9	62.3	50.9	70.6
10 '- 0 "	1 '- 9 "	100.0	100.0	89.7	100.0	89.7	100.0
	2 '- 0 "	96.2	96.2	78.5	96.2	78.5	100.0
	2 '- 3 "	85.5	85.5	69.8	85.5	69.8	96.8
	2 '- 6 "	77.0	77.0	62.8	77.0	62.8	87.2
	2 '- 9 "	70.0	70.0	57.1	70.0	57.1	79.2
	3 '- 3 "	59.2	59.2	48.3	59.2	48.3	67.0
10 '- 6 "	1 '- 9 "	100.0	100.0	85.5	100.0	85.5	100.0
	2 '- 0 "	91.7	91.7	74.8	91.7	74.8	100.0
	2 '- 3 "	81.5	81.5	66.5	81.5	66.5	92.2
	2 '- 6 "	73.3	73.3	59.8	73.3	59.8	83.0
	2 '- 9 "	66.7	66.7	54.4	66.7	54.4	75.5
	3 '- 3 "	56.4	56.4	46.0	56.4	46.0	63.9
11 '- 0 "	1 '- 9 "	100.0	100.0	81.6	100.0	81.6	100.0
	2 '- 0 "	87.5	87.5	71.4	87.5	71.4	99.0
	2 '- 3 "	77.8	77.8	63.4	77.8	63.4	88.0
	2 '- 6 "	70.0	70.0	57.1	70.0	57.1	79.2
	2 '- 9 "	63.6	63.6	51.9	63.6	51.9	72.0
	3 '- 3 "	53.8	53.8	43.9	53.8	43.9	60.9
11 '- 6 "	1 '- 9 "	95.6	95.6	78.0	95.6	78.0	100.0
	2 '- 0 "	83.7	83.7	68.3	83.7	68.3	94.7
	2 '- 3 "	74.4	74.4	60.7	74.4	60.7	84.2
	2 '- 6 "	66.9	66.9	54.6	66.9	54.6	75.8
	2 '- 9 "	60.9	60.9	49.7	60.9	49.7	68.9
	3 '- 3 "	51.5	51.5	42.0	51.5	42.0	58.3
12 '- 0 "	1 '- 9 "	91.7	91.7	74.8	91.7	74.8	100.0
	2 '- 0 "	80.2	80.2	65.4	80.2	65.4	90.8
	2 '- 3 "	71.3	71.3	58.2	71.3	58.2	80.7
	2 '- 6 "	64.2	64.2	52.3	64.2	52.3	72.6
	2 '- 9 "	58.3	58.3	47.6	58.3	47.6	66.0
	3 '- 3 "	49.4	49.4	40.3	49.4	40.3	55.9
12 '- 6 "	1 '- 9 "	88.0	88.0	71.8	88.0	71.8	99.6
	2 '- 0 "	77.0	77.0	62.8	77.0	62.8	87.2
	2 '- 3 "	68.4	68.4	55.8	68.4	55.8	77.5
	2 '- 6 "	61.6	61.6	50.2	61.6	50.2	69.7
	2 '- 9 "	56.0	56.0	45.7	56.0	45.7	63.4
	3 '- 3 "	47.4	47.4	38.7	47.4	38.7	53.6

OPTION #2 : 3 FASTENERS CONNECTION

MAXIMUM MULLION SPAN "L" (ft-in)	EFFECTIVE SPACING b = S_1/2 "b" ft-in	MAXIMUM A.S.D. DESIGN PRESSURE RATING (psf)					
		POURED CONCRETE (Min. fc = 3ksi) SUBSTRATE			GROUT FILLED CONCRETE BLOCK SUBSTRATE		1/4" Min. THK ASTM A-36 STEEL SUBSTRATE
		FASTENER TYPES			FASTENER TYPES		FASTENER
		E	F	G	H	I	J
8 '- 5 "	1 '- 9 "	100.0	100.0	100.0	100.0	100.0	100.0
	2 '- 0 "	100.0	100.0	100.0	100.0	100.0	100.0
	2 '- 3 "	100.0	100.0	100.0	100.0	100.0	100.0
	2 '- 6 "	100.0	100.0	100.0	100.0	100.0	100.0
	2 '- 9 "	100.0	100.0	100.0	100.0	100.0	100.0
	3 '- 3 "	100.0	100.0	86.1	100.0	86.1	100.0
8 '- 6 "	1 '- 9 "	100.0	100.0	100.0	100.0	100.0	100.0
	2 '- 0 "	100.0	100.0	100.0	100.0	100.0	100.0
	2 '- 3 "	100.0	100.0	100.0	100.0	100.0	100.0
	2 '- 6 "	100.0	100.0	100.0	100.0	100.0	100.0
	2 '- 9 "	100.0	100.0	100.0	100.0	100.0	100.0
	3 '- 3 "	100.0	100.0	85.3	100.0	85.3	100.0
9 '- 0 "	1 '- 9 "	100.0	100.0	100.0	100.0	100.0	100.0
	2 '- 0 "	100.0	100.0	100.0	100.0	100.0	100.0
	2 '- 3 "	100.0	100.0	100.0	100.0	100.0	100.0
	2 '- 6 "	100.0	100.0	100.0	100.0	100.0	100.0
	2 '- 9 "	100.0	100.0	95.2	100.0	95.2	100.0
	3 '- 3 "	98.7	98.7	80.5	98.7	80.5	100.0
9 '- 6 "	1 '- 9 "	100.0	100.0	100.0	100.0	100.0	100.0
	2 '- 0 "	100.0	100.0	100.0	100.0	100.0	100.0
	2 '- 3 "	100.0	100.0	100.0	100.0	100.0	100.0
	2 '- 6 "	100.0	100.0	99.2	100.0	99.2	100.0
	2 '- 9 "	100.0	100.0	90.2	100.0	90.2	100.0
	3 '- 3 "	93.5	93.5	76.3	93.5	76.3	100.0
10 '- 0 "	1 '- 9 "	100.0	100.0	100.0	100.0	100.0	100.0
	2 '- 0 "	100.0	100.0	100.0	100.0	100.0	100.0
	2 '- 3 "	100.0	100.0	100.0	100.0	100.0	100.0
	2 '- 6 "	100.0	100.0	99.2	100.0	94.2	100.0
	2 '- 9 "	100.0	100.0	85.7	100.0	85.7	100.0
	3 '- 3 "	88.8	88.8	72.5	88.8	72.5	100.0
10 '- 6 "	1 '- 9 "	100.0	100.0	100.0	100.0	100.0	100.0
	2 '- 0 "	100.0	100.0	100.0	100.0	100.0	100.0
	2 '- 3 "	100.0	100.0	99.7	100.0	99.7	100.0
	2 '- 6 "	100.0	100.0	89.7	100.0	89.7	100.0
	2 '- 9 "	100.0	100.0	81.6	100.0	81.6	100.0
	3 '- 3 "	84.6	84.6	69.0	84.6	69.0	95.8
11 '- 0 "	1 '- 9 "	100.0	100.0	100.0	100.0	100.0	100.0
	2 '- 0 "	100.0	100.0	100.0	100.0	100.0	100.0
	2 '- 3 "	100.0	100.0	95.2	100.0	95.2	100.0
	2 '- 6 "	100.0	100.0	85.7	100.0	85.7	100.0
	2 '- 9 "	95.4	95.4	77.9	95.4	77.9	100.0
	3 '- 3 "	80.8	80.8	65.9	80.8	65.9	91.4
11 '- 6 "	1 '- 9 "	100.0	100.0	100.0	100.0	100.0	100.0
	2 '- 0 "	100.0	100.0	100.0	100.0	100.0	100.0
	2 '- 3 "	100.0	100.0	91.0	100.0	91.0	100.0
	2 '- 6 "	100.0	100.0	81.9	100.0	81.9	100.0
	2 '- 9 "	91.3	91.3	74.5	91.3	74.5	100.0
	3 '- 3 "	77.2	77.2	63.0	77.2	63.0	87.4
12 '- 0 "	1 '- 9 "	100.0	100.0	100.0	100.0	100.0	100.0
	2 '- 0 "	100.0	100.0	98.1	100.0	98.1	100.0
	2 '- 3 "	100.0	100.0	87.2	100.0	87.2	100.0
	2 '- 6 "	98.2	98.2	78.5	98.2	78.5	100.0
	2 '- 9 "	87.5	87.5	71.4	87.5	71.4	99.0
	3 '- 3 "	74.0	74.0	60.4	74.0	60.4	83.8
12 '- 6 "	1 '- 9 "	100.0	100.0	100.0	100.0	100.0	100.0
	2 '- 0 "	100.0	100.0	94.2	100.0	94.2	100.0
	2 '- 3 "	100.0	100.0	83.7	100.0	83.7	100.0
	2 '- 6 "	92.4	92.4	75.4	92.4	75.4	100.0
	2 '- 9 "	84.0	84.0	68.5	84.0	68.5	95.1
	3 '- 3 "	71.1	71.1	58.0	71.1	58.0	80.5

OPTION #3 : 4 FASTENERS CONNECTION

MAXIMUM MULLION SPAN "L" (ft-in)	EFFECTIVE SPACING b = S_1/2 "b" ft-in	MAXIMUM A.S.D. DESIGN PRESSURE RATING (psf)					
		POURED CONCRETE (Min. fc = 3ksi) SUBSTRATE			GROUT FILLED CONCRETE BLOCK SUBSTRATE		1/4" Min. THK ASTM A-36 STEEL SUBSTRATE
		FASTENER TYPES			FASTENER TYPES		FASTENER
		E	F	G	H	I	J
8 '- 5 "	1 '- 9 "	100.0	100.0	100.0	100.0	100.0	100.0
	2 '- 0 "	100.0	100.0	100.0	100.0	100.0	100.0
	2 '- 3 "	100.0	100.0	100.0	100.0	100.0	100.0
	2 '- 6 "	100.0	100.0	100.0	100.0	100.0	100.0
	2 '- 9 "	100.0	100.0	100.0	100.0	100.0	100.0
	3 '- 3 "	100.0	100.0	100.0	100.0	100.0	100.0
8 '- 6 "	1 '- 9 "	100.0	100.0	100.0	100.0	100.0	100.0
	2 '- 0 "	100.0	100.0	100.0	100.0	100.0	100.0
	2 '- 3 "	100.0	100.0	100.0	100.0	100.0	100.0
	2 '- 6 "	100.0	100.0	100.0	100.0	100.0	100.0
	2 '- 9 "	100.0	100.0	100.0	100.0	100.0	100.0
	3 '- 3 "	100.0	100.0	100.0	100.0	100.0	100.0
9 '- 0 "	1 '- 9 "	100.0	100.0	100.0	100.0	100.0	100.0
	2 '- 0 "	100.0	100.0	100.0	100.0	100.0	100.0
	2 '- 3 "	100.0	100.0	100.0	100.0	100.0	100.0
	2 '- 6 "	100.0	100.0	100.0	100.0	100.0	100.0
	2 '- 9 "	100.0	100.0	100.0	100.0	100.0	100.0
	3 '- 3 "	100.0	100.0	100.0	100.0	100.0	100.0
9 '- 6 "	1 '- 9 "	100.0	100.0	100.0	100.0	100.0	100.0
	2 '- 0 "	100.0	100.0	100.0	100.0	100.0	100.0
	2 '- 3 "	100.0	100.0	100.0	100.0	100.0	100.0
	2 '- 6 "	100.0	100.0	100.0	100.0	100.0	100.0
	2 '- 9 "	100.0	100.0	100.0	100.0	100.0	100.0
	3 '- 3 "	100.0	100.0	100.0	100.0	100.0	100.0
10 '- 0 "	1 '- 9 "	100.0	100.0	100.0	100.0	100.0	100.0
	2 '- 0 "	100.0	100.0	100.0	100.0	100.0	100.0
	2 '- 3 "	100.0	100.0	100.0	100.0	100.0	100.0
	2 '- 6 "	100.0	100.0	100.0	100.0	100.0	100.0
	2 '- 9 "	100.0	100.0	100.0	100.0	100.0	100.0
	3 '- 3 "	100.0	100.0	96.6	100.0	96.6	100.0
10 '- 6 "	1 '- 9 "	100.0	100.0	100.0	100.0	100.0	100.0
	2 '- 0 "	100.0	100.0	100.0	100.0	100.0	100.0
	2 '- 3 "	100.0	100.0	100.0	100.0	100.0	100.0
	2 '- 6 "	100.0	100.0	100.0	100.0	100.0	100.0
	2 '- 9 "	100.0	100.0	100.0	100.0	100.0	100.0
	3 '- 3 "	100.0	100.0	92.0	100.0	92.0	100.0
11 '- 0 "	1 '- 9 "	100.0	100.0	100.0	100.0	100.0	100.0
	2 '- 0 "	100.0	100.0	100.0	100.0	100.0	100.0
	2 '- 3 "	100.0	100.0	100.0	100.0	100.0	100.0
	2 '- 6 "	100.0	100.0	100.0	100.0	100.0	100.0
	2 '- 9 "	100.0	100.0	100.0	100.0	100.0	100.0
	3 '- 3 "	100.0	100.0	87.8	100.0	87.8	100.0
11 '- 6 "	1 '- 9 "	100.0	100.0	100.0	100.0	100.0	100.0
	2 '- 0 "	100.0	100.0	100.0	100.0	100.0	100.0
	2 '- 3 "	100.0	100.0	100.0	100.0	100.0	100.0
	2 '- 6 "	100.0	100.0	100.0	100.0	100.0	100.0
	2 '- 9 "	100.0	100.0	99.3	100.0	99.3	100.0
	3 '- 3 "	100.0	100.0	84.0	100.0	84.0	100.0
12 '- 0 "	1 '- 9 "	100.0	100.0	100.0	100.0	100.0	100.0
	2 '- 0 "	100.0	100.0	100.0	100.0	100.0	100.0
	2 '- 3 "	100.0	100.0	100.0	100.0	100.0	100.0
	2 '- 6 "	100.0	100.0	100.0	100.0	100.0	100.0
	2 '- 9 "	100.0	100.0	95.2	100.0	95.2	100.0
	3 '- 3 "	98.7	98.7	80.5	98.7	80.5	100.0
12 '- 6 "	1 '- 9 "	100.0	100.0	100.0	100.0	100.0	100.0
	2 '- 0 "	100.0	100.0	100.0	100.0	100.0	100.0
	2 '- 3 "	100.0	100.0	100.0	100.0	100.0	100.0
	2 '- 6 "	100.0	100.0	100.0	100.0	100.0	100.0
	2 '- 9 "	100.0	100.0	91.4	100.0	91.4	100.0
	3 '- 3 "	94.8	94.8	77.3	94.8	77.3	100.0

* SEE SHEET 9 FOR EFFECTIVE SPACING DEFINITION AT ISOMETRIC.

OPTION # 1 (ELEVATION)
(2) FASTENERS CONNECTION

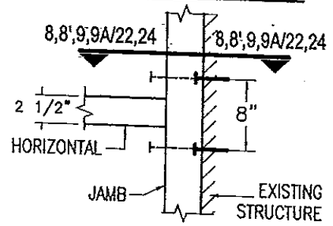

OPTION # 2 (ELEVATION)
(3) FASTENERS CONNECTION

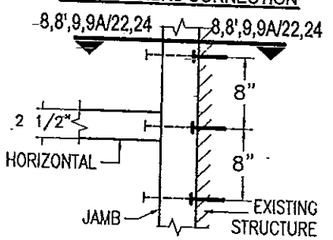

OPTION # 3 (ELEVATION)
(4) FASTENERS CONNECTION

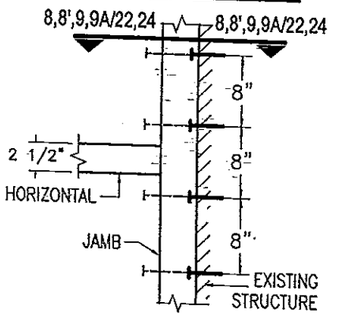

B FASTENER TYPES REQUIREMENTS:

E - 3/8"Ø HILTI KWIK BOLT TZ ANCHOR W/ 2" Min. EMBEDMENT INTO POURED CONCRETE (Min. fc = 3 ksi) BEYOND ANY FINISH MATERIAL, W/ 4" MIN. EDGE DISTANCE.

F - 3/8"Ø HILTI KWIK BOLT 3 ANCHOR W/ 2 1/2" Min. EMBEDMENT INTO POURED CONCRETE (Min. fc = 3 ksi) BEYOND ANY FINISH MATERIAL, W/ 4" MIN. EDGE DISTANCE.

G - 3/8"Ø HILTI HUS-H SCREW ANCHOR W/ 2 3/4" Min. EMBEDMENT INTO POURED CONCRETE (Min. fc = 3 ksi) BEYOND ANY FINISH MATERIAL, W/ 3 3/4" MIN. EDGE DISTANCE.

H - 3/8"Ø HILTI KWIK BOLT 3 ANCHOR W/ 3" Min. EMBEDMENT INTO GROUT FILLED CONCRETE BLOCK BEYOND ANY FINISH MATERIAL, W/ 4" MIN. EDGE DISTANCE.

I - 3/8"Ø HILTI HUS-H SCREW ANCHOR W/ 2 3/4" Min. EMBEDMENT INTO GROUT FILLED CONCRETE BLOCK BEYOND ANY FINISH MATERIAL, W/ 3 3/4" MIN. EDGE DISTANCE.

J - 3/8"Ø-13 TYPE "F" GRADE 5 BOLT TO 1/4" MIN. THK ASTM A-36 STEEL W/ 1" MIN. EDGE DISTANCE OR 3/8"Ø-13 SAE GRADE 5, GALVANIZED STEEL BOLT W/ LOCK WASHER & NUT TO 1/4" Min. THK. ASTM A-36 STEEL & MIN. E.D. = 3/4".

FLORIDA BUILDING CODE (High Velocity Hurricane Zone)

HR-250 CAPTURED CURTAIN WALL SYSTEM
LARGE MISSILE IMPACT LAMINATED GLASS

Oldcastle BuildingEnvelope™
803 Airport Rd - Terrell, TX 75160
www.OldcastleBE.com - Phone 800-869-4567

REV. No	DESCRIPTION	DATE
1	OLD 10-103	11/16/11
2	-	-

REV. No	DESCRIPTION	DATE
3	-	-
4	-	-

M.C.V./A.G. DRAWN BY:
11/18/11 DATE
11-124 DRAWING No
SHEET 14 OF 36

©2011 TILTECO, INC

TILLIT TESTING & ENGINEERING COMPANY
6355 N.W. 36th. St., Ste. 305, VIRGINIA GARDENS, FL. 33166
Phone : (305)871-1530 . Fax : (305)871-1531
e-mail: tilteco@aol.com
EB-0006719
WALTER A. TILLIT Jr. P.E.
FLORIDA Lic. # 44167

WALTER A. TILLIT LICENSE No. 44167 STATE OF FLORIDA PROFESSIONAL ENGINEER

P.E. SEAL/SIGNATURE/DATE

PRODUCT REVISED
as complying with the Florida Building Code
Acceptance No. 12-0104.05
Expiration Date 12-15-2016
By
Miami Dade Product Control

MIAMI-DADE COUNTY

MAXIMUM A.S.D DESIGN PRESSURE RATING FOR JAMBS AT TWIN SPAN CURTAIN WALL FASTENED TO EXISTING STRUCTURE W/ 3/8"Ø FASTENERS (CONTINUED)

OPTION #1 : 2 FASTENERS CONNECTION

MAXIMUM MULLION SPAN	EFFECTIVE SPACING b = S_s/2 *	MAXIMUM A.S.D. DESIGN PRESSURE RATING (psf)					
		POURED CONCRETE (Min. fc = 3ksi) SUBSTRATE			GROUT FILLED CONCRETE BLOCK SUBSTRATE		1/4" Min. THK ASTM A-36 STEEL SUBSTRATE
		FASTENER TYPES			FASTENER TYPES		FASTENER
"L" (ft-in)	"b" (ft-in)	E	F	G	H	I	J
8 '- 5 "	1 '- 9 "	78.6	78.6	64.1	78.6	64.1	88.9
	2 '- 0 "	68.7	68.7	56.1	68.7	56.1	77.8
	2 '- 3 "	61.1	61.1	49.8	61.1	49.8	69.2
	2 '- 6 "	55.0	55.0	44.9	55.0	44.9	62.3
	2 '- 9 "	50.0	50.0	40.8	50.0	40.8	56.6
8 '- 6 "	1 '- 9 "	78.6	78.6	64.1	78.6	64.1	88.9
	2 '- 0 "	68.7	68.7	56.1	68.7	56.1	77.8
	2 '- 3 "	61.1	61.1	49.8	61.1	49.8	69.2
	2 '- 6 "	55.0	55.0	44.9	55.0	44.9	62.3
	2 '- 9 "	50.0	50.0	40.8	50.0	40.8	56.6
9 '- 0 "	1 '- 9 "	78.6	78.6	64.1	78.6	64.1	88.9
	2 '- 0 "	68.7	68.7	56.1	68.7	56.1	77.8
	2 '- 3 "	61.1	61.1	49.8	61.1	49.8	69.2
	2 '- 6 "	55.0	55.0	44.9	55.0	44.9	62.3
	2 '- 9 "	50.0	50.0	40.8	50.0	40.8	56.6
9 '- 6 "	1 '- 9 "	78.6	78.6	64.1	78.6	64.1	88.9
	2 '- 0 "	68.7	68.7	56.1	68.7	56.1	77.8
	2 '- 3 "	61.1	61.1	49.8	61.1	49.8	69.2
	2 '- 6 "	55.0	55.0	44.9	55.0	44.9	62.3
	2 '- 9 "	50.0	50.0	40.8	50.0	40.8	56.6
10 '- 0 "	1 '- 9 "	78.6	78.6	64.1	78.6	64.1	88.9
	2 '- 0 "	68.7	68.7	56.1	68.7	56.1	77.8
	2 '- 3 "	61.1	61.1	49.8	61.1	49.8	69.2
	2 '- 6 "	55.0	55.0	44.9	55.0	44.9	62.3
	2 '- 9 "	50.0	50.0	40.8	50.0	40.8	56.6
10 '- 6 "	1 '- 9 "	78.6	78.6	64.1	78.6	64.1	88.9
	2 '- 0 "	68.7	68.7	56.1	68.7	56.1	77.8
	2 '- 3 "	61.1	61.1	49.8	61.1	49.8	69.2
	2 '- 6 "	55.0	55.0	44.9	55.0	44.9	62.3
	2 '- 9 "	50.0	50.0	40.8	50.0	40.8	56.6
11 '- 0 "	1 '- 9 "	78.6	78.6	64.1	78.6	64.1	88.9
	2 '- 0 "	68.7	68.7	56.1	68.7	56.1	77.8
	2 '- 3 "	61.1	61.1	49.8	61.1	49.8	69.2
	2 '- 6 "	55.0	55.0	44.9	55.0	44.9	62.3
	2 '- 9 "	50.0	50.0	40.8	50.0	40.8	56.6
11 '- 6 "	1 '- 9 "	78.6	78.6	64.1	78.6	64.1	88.9
	2 '- 0 "	68.7	68.7	56.1	68.7	56.1	77.8
	2 '- 3 "	61.1	61.1	49.8	61.1	49.8	69.2
	2 '- 6 "	55.0	55.0	44.9	55.0	44.9	62.3
	2 '- 9 "	50.0	50.0	40.8	50.0	40.8	56.6
12 '- 0 "	1 '- 9 "	78.6	78.6	64.1	78.6	64.1	88.9
	2 '- 0 "	68.7	68.7	56.1	68.7	56.1	77.8
	2 '- 3 "	61.1	61.1	49.8	61.1	49.8	69.2
	2 '- 6 "	55.0	55.0	44.9	55.0	44.9	62.3
	2 '- 9 "	50.0	50.0	40.8	50.0	40.8	56.6
12 '- 6 "	1 '- 9 "	78.6	78.6	64.1	78.6	64.1	88.9
	2 '- 0 "	68.7	68.7	56.1	68.7	56.1	77.8
	2 '- 3 "	61.1	61.1	49.8	61.1	49.8	69.2
	2 '- 6 "	55.0	55.0	44.9	55.0	44.9	62.3
	2 '- 9 "	50.0	50.0	40.8	50.0	40.8	56.6

OPTION #2 : 3 FASTENERS CONNECTION

MAXIMUM MULLION SPAN	EFFECTIVE SPACING b = S_s/2 *	MAXIMUM A.S.D. DESIGN PRESSURE RATING (psf)					
		POURED CONCRETE (Min. fc = 3ksi) SUBSTRATE			GROUT FILLED CONCRETE BLOCK SUBSTRATE		1/4" Min. THK ASTM A-36 STEEL SUBSTRATE
		FASTENER TYPES			FASTENER TYPES		FASTENER
"L" (ft-in)	"b" (ft-in)	E	F	G	H	I	J
8 '- 5 "	1 '- 9 "	90.0	90.0	90.0	90.0	90.0	90.0
	2 '- 0 "	90.0	90.0	84.1	90.0	84.1	90.0
	2 '- 3 "	90.0	90.0	74.8	90.0	74.8	90.0
	2 '- 6 "	82.5	82.5	67.3	82.5	67.3	90.0
	2 '- 9 "	75.0	75.0	61.2	75.0	61.2	84.9
8 '- 6 "	1 '- 9 "	90.0	90.0	90.0	90.0	90.0	90.0
	2 '- 0 "	90.0	90.0	84.1	90.0	84.1	90.0
	2 '- 3 "	90.0	90.0	74.8	90.0	74.8	90.0
	2 '- 6 "	82.5	82.5	67.3	82.5	67.3	90.0
	2 '- 9 "	75.0	75.0	61.2	75.0	61.2	84.9
9 '- 0 "	1 '- 9 "	90.0	90.0	90.0	90.0	90.0	90.0
	2 '- 0 "	90.0	90.0	84.1	90.0	84.1	90.0
	2 '- 3 "	90.0	90.0	74.8	90.0	74.8	90.0
	2 '- 6 "	82.5	82.5	67.3	82.5	67.3	90.0
	2 '- 9 "	75.0	75.0	61.2	75.0	61.2	84.9
9 '- 6 "	1 '- 9 "	90.0	90.0	90.0	90.0	90.0	90.0
	2 '- 0 "	90.0	90.0	84.1	90.0	84.1	90.0
	2 '- 3 "	90.0	90.0	74.8	90.0	74.8	90.0
	2 '- 6 "	82.5	82.5	67.3	82.5	67.3	90.0
	2 '- 9 "	75.0	75.0	61.2	75.0	61.2	84.9
10 '- 0 "	1 '- 9 "	90.0	90.0	90.0	90.0	90.0	90.0
	2 '- 0 "	90.0	90.0	84.1	90.0	84.1	90.0
	2 '- 3 "	90.0	90.0	74.8	90.0	74.8	90.0
	2 '- 6 "	82.5	82.5	67.3	82.5	67.3	90.0
	2 '- 9 "	75.0	75.0	61.2	75.0	61.2	84.9
10 '- 6 "	1 '- 9 "	90.0	90.0	90.0	90.0	90.0	90.0
	2 '- 0 "	90.0	90.0	84.1	90.0	84.1	90.0
	2 '- 3 "	90.0	90.0	74.8	90.0	74.8	90.0
	2 '- 6 "	82.5	82.5	67.3	82.5	67.3	90.0
	2 '- 9 "	75.0	75.0	61.2	75.0	61.2	84.9
11 '- 0 "	1 '- 9 "	90.0	90.0	90.0	90.0	90.0	90.0
	2 '- 0 "	90.0	90.0	84.1	90.0	84.1	90.0
	2 '- 3 "	90.0	90.0	74.8	90.0	74.8	90.0
	2 '- 6 "	82.5	82.5	67.3	82.5	67.3	90.0
	2 '- 9 "	75.0	75.0	61.2	75.0	61.2	84.9
11 '- 6 "	1 '- 9 "	90.0	90.0	90.0	90.0	90.0	90.0
	2 '- 0 "	90.0	90.0	84.1	90.0	84.1	90.0
	2 '- 3 "	90.0	90.0	74.8	90.0	74.8	90.0
	2 '- 6 "	82.5	82.5	67.3	82.5	67.3	90.0
	2 '- 9 "	75.0	75.0	61.2	75.0	61.2	84.9
12 '- 0 "	1 '- 9 "	90.0	90.0	90.0	90.0	90.0	90.0
	2 '- 0 "	90.0	90.0	84.1	90.0	84.1	90.0
	2 '- 3 "	90.0	90.0	74.8	90.0	74.8	90.0
	2 '- 6 "	82.5	82.5	67.3	82.5	67.3	90.0
	2 '- 9 "	75.0	75.0	61.2	75.0	61.2	84.9
12 '- 6 "	1 '- 9 "	90.0	90.0	90.0	90.0	90.0	90.0
	2 '- 0 "	90.0	90.0	84.1	90.0	84.1	90.0
	2 '- 3 "	90.0	90.0	74.8	90.0	74.8	90.0
	2 '- 6 "	82.5	82.5	67.3	82.5	67.3	90.0
	2 '- 9 "	75.0	75.0	61.2	75.0	61.2	84.9

OPTION #3: 4 FASTENERS CONNECTION

MAXIMUM MULLION SPAN	EFFECTIVE SPACING b = S_s/2 *	MAXIMUM A.S.D. DESIGN PRESSURE RATING (psf)					
		POURED CONCRETE (Min. fc = 3ksi) SUBSTRATE			GROUT FILLED CONCRETE BLOCK SUBSTRATE		1/4" Min. THK ASTM A-36 STEEL SUBSTRATE
		FASTENER TYPES			FASTENER TYPES		FASTENER
"L" (ft-in)	"b" (ft-in)	E	F	G	H	I	J
8 '- 5 "	1 '- 9 "	90.0	90.0	90.0	90.0	90.0	90.0
	2 '- 0 "	90.0	90.0	90.0	90.0	90.0	90.0
	2 '- 3 "	90.0	90.0	90.0	90.0	90.0	90.0
	2 '- 6 "	90.0	90.0	89.7	90.0	89.7	90.0
	2 '- 9 "	90.0	90.0	81.6	90.0	81.6	90.0
8 '- 6 "	1 '- 9 "	90.0	90.0	90.0	90.0	90.0	90.0
	2 '- 0 "	90.0	90.0	90.0	90.0	90.0	90.0
	2 '- 3 "	90.0	90.0	90.0	90.0	90.0	90.0
	2 '- 6 "	90.0	90.0	89.7	90.0	89.7	90.0
	2 '- 9 "	90.0	90.0	81.6	90.0	81.6	90.0
9 '- 0 "	1 '- 9 "	90.0	90.0	90.0	90.0	90.0	90.0
	2 '- 0 "	90.0	90.0	90.0	90.0	90.0	90.0
	2 '- 3 "	90.0	90.0	90.0	90.0	90.0	90.0
	2 '- 6 "	90.0	90.0	89.7	90.0	89.7	90.0
	2 '- 9 "	90.0	90.0	81.6	90.0	81.6	90.0
9 '- 6 "	1 '- 9 "	90.0	90.0	90.0	90.0	90.0	90.0
	2 '- 0 "	90.0	90.0	90.0	90.0	90.0	90.0
	2 '- 3 "	90.0	90.0	90.0	90.0	90.0	90.0
	2 '- 6 "	90.0	90.0	89.7	90.0	89.7	90.0
	2 '- 9 "	90.0	90.0	81.6	90.0	81.6	90.0
10 '- 0 "	1 '- 9 "	90.0	90.0	90.0	90.0	90.0	90.0
	2 '- 0 "	90.0	90.0	90.0	90.0	90.0	90.0
	2 '- 3 "	90.0	90.0	90.0	90.0	90.0	90.0
	2 '- 6 "	90.0	90.0	89.7	90.0	89.7	90.0
	2 '- 9 "	90.0	90.0	81.6	90.0	81.6	90.0
10 '- 6 "	1 '- 9 "	90.0	90.0	90.0	90.0	90.0	90.0
	2 '- 0 "	90.0	90.0	90.0	90.0	90.0	90.0
	2 '- 3 "	90.0	90.0	90.0	90.0	90.0	90.0
	2 '- 6 "	90.0	90.0	89.7	90.0	89.7	90.0
	2 '- 9 "	90.0	90.0	81.6	90.0	81.6	90.0
11 '- 0 "	1 '- 9 "	90.0	90.0	90.0	90.0	90.0	90.0
	2 '- 0 "	90.0	90.0	90.0	90.0	90.0	90.0
	2 '- 3 "	90.0	90.0	90.0	90.0	90.0	90.0
	2 '- 6 "	90.0	90.0	89.7	90.0	89.7	90.0
	2 '- 9 "	90.0	90.0	81.6	90.0	81.6	90.0
11 '- 6 "	1 '- 9 "	90.0	90.0	90.0	90.0	90.0	90.0
	2 '- 0 "	90.0	90.0	90.0	90.0	90.0	90.0
	2 '- 3 "	90.0	90.0	90.0	90.0	90.0	90.0
	2 '- 6 "	90.0	90.0	89.7	90.0	89.7	90.0
	2 '- 9 "	90.0	90.0	81.6	90.0	81.6	90.0
12 '- 0 "	1 '- 9 "	90.0	90.0	90.0	90.0	90.0	90.0
	2 '- 0 "	90.0	90.0	90.0	90.0	90.0	90.0
	2 '- 3 "	90.0	90.0	90.0	90.0	90.0	90.0
	2 '- 6 "	90.0	90.0	89.7	90.0	89.7	90.0
	2 '- 9 "	90.0	90.0	81.6	90.0	81.6	90.0
12 '- 6 "	1 '- 9 "	90.0	90.0	90.0	90.0	90.0	90.0
	2 '- 0 "	90.0	90.0	90.0	90.0	90.0	90.0
	2 '- 3 "	90.0	90.0	90.0	90.0	90.0	90.0
	2 '- 6 "	90.0	90.0	89.7	90.0	89.7	90.0
	2 '- 9 "	90.0	90.0	81.6	90.0	81.6	90.0

* SEE SHEET 10 FOR EFFECTIVE SPACING DEFINITION AT ISOMETRIC.

OPTION # 1 (ELEVATION)
(2) FASTENERS CONNECTION

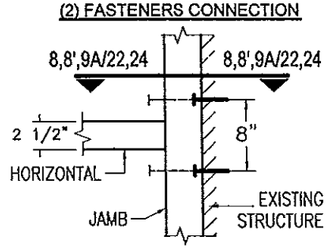

OPTION # 2 (ELEVATION)
(3) FASTENERS CONNECTION

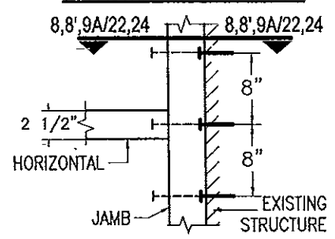

OPTION # 3 (ELEVATION)
(4) FASTENERS CONNECTION

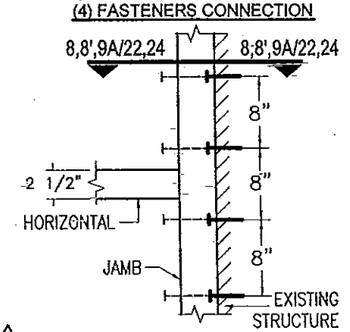

B FASTENER TYPES REQUIREMENTS:

E - 3/8"Ø HILTI KWIK BOLT TZ ANCHOR W/ 2" Min. EMBEDMENT INTO POURED CONCRETE (Min. fc = 3 ksi) BEYOND ANY FINISH MATERIAL, W/ 4" MIN. EDGE DISTANCE.

F - 3/8"Ø HILTI KWIK BOLT 3 ANCHOR W/ 2 1/2" Min. EMBEDMENT INTO POURED CONCRETE (Min. fc = 3 ksi) BEYOND ANY FINISH MATERIAL, W/ 4" MIN. EDGE DISTANCE.

G - 3/8"Ø HILTI HUS-H SCREW ANCHOR W/ 2 3/4" Min. EMBEDMENT INTO POURED CONCRETE (Min. fc = 3 ksi) BEYOND ANY FINISH MATERIAL, W/ 3 3/4" MIN. EDGE DISTANCE.

H - 3/8"Ø HILTI KWIK BOLT 3 ANCHOR W/ 3" Min. EMBEDMENT INTO GROUT FILLED CONCRETE BLOCK BEYOND ANY FINISH MATERIAL, W/ 4" MIN. EDGE DISTANCE.

I - 3/8"Ø HILTI HUS-H SCREW ANCHOR W/ 2 3/4" Min. EMBEDMENT INTO GROUT FILLED CONCRETE BLOCK BEYOND ANY FINISH MATERIAL, W/ 3 3/4" MIN. EDGE DISTANCE.

J - 3/8"Ø-13 TYPE "F" GRADE 5 BOLT TO 1/4" MIN. THK. ASTM A-36 STEEL W/ 1" MIN. EDGE DISTANCE OR 3/8"Ø-13 SAE GRADE 5, GALVANIZED STEEL BOLT W/ LOCK WASHER & NUT TO 1/4" Min. THK. ASTM A-36 STEEL & MIN. E.D. = 3/4".

FLORIDA BUILDING CODE (High Velocity Hurricane Zone)

HR-250 CAPTURED CURTAIN WALL SYSTEM
LARGE MISSILE IMPACT LAMINATED GLASS

M.C.V./A.G.
DRAWN BY:

11/18/11
DATE

11-124
DRAWING No

SHEET 15 OF 36

Oldcastle BuildingEnvelope™
803 Airport Rd - Terrell, TX 75160
www.OldcastleBE.com - Phone 800-869-4567

REV. No	DESCRIPTION	DATE
1	OLD 10-103	11/18/11
2	-	-
3	-	-
4	-	-

©2011 TILTECO, INC

TILTECO INC.
TILLIT TESTING & ENGINEERING COMPANY
6335 N.W. 36th. St., Ste. 305, VIRGINIA GARDENS, FL 33166
Phone : (305)871-1530 . Fax : (305)871-1531
e-mail: tilteco@aol.com
EB-0006719
WALTER A. TILLIT Jr., P.E.
FLORIDA Lic. # 44167

WALTER A. TILLIT JR. LICENSE No. 44167 STATE OF FLORIDA PROFESSIONAL ENGINEER

P.E. SEAL/SIGNATURE/DATE

PRODUCT REVISED
as complying with the Florida
Building Code
Acceptance No 12-0109.05
Expiration Date 04/16/2012
By Miami Dade Product Control

MIAMI-DADE COUNTY

MAXIMUM A.S.D DESIGN PRESSURE RATING FOR JAMBS AT SINGLE SPAN CURTAIN WALL FASTENED TO EXISTING STRUCTURE W/ 1/2"Ø FASTENERS (CONTINUED)

OPTION #1 : 2 FASTENER CONNECTION

MAXIMUM A.S.D DESIGN PRESSURE RATING (psf)

MAXIMUM MULLION SPAN "L" (ft-in)	EFFECTIVE SPACING b = $S_s/2$ "b" ft-in	POURED CONCRETE (Min. fc = 3ksi) SUBSTRATE – FASTENER TYPES			GROUT FILLED CONCRETE BLOCK SUBSTRATE – FASTENER TYPES		1/4" Min. THK ASTM A-36 STEEL SUBSTRATE – FASTENER
		K	L	M	N	O	P
8'-5"	1'-9"	100.0	100.0	100.0	100.0	100.0	100.0
	2'-0"	100.0	100.0	100.0	100.0	100.0	100.0
	2'-3"	100.0	100.0	100.0	100.0	100.0	100.0
	2'-6"	100.0	100.0	100.0	100.0	90.3	100.0
	2'-9"	100.0	100.0	100.0	100.0	82.1	100.0
	3'-3"	100.0	100.0	100.0	100.0	69.5	100.0
8'-6"	1'-9"	100.0	100.0	100.0	100.0	100.0	100.0
	2'-0"	100.0	100.0	100.0	100.0	100.0	100.0
	2'-3"	100.0	100.0	100.0	100.0	99.3	100.0
	2'-6"	100.0	100.0	100.0	100.0	89.4	100.0
	2'-9"	100.0	100.0	100.0	100.0	81.3	100.0
	3'-3"	100.0	100.0	100.0	100.0	68.8	100.0
9'-0"	1'-9"	100.0	100.0	100.0	100.0	100.0	100.0
	2'-0"	100.0	100.0	100.0	100.0	100.0	100.0
	2'-3"	100.0	100.0	100.0	100.0	93.8	100.0
	2'-6"	100.0	100.0	100.0	100.0	84.4	100.0
	2'-9"	100.0	100.0	100.0	100.0	76.8	100.0
	3'-3"	100.0	100.0	100.0	100.0	65.0	100.0
9'-6"	1'-9"	100.0	100.0	100.0	100.0	100.0	100.0
	2'-0"	100.0	100.0	100.0	100.0	100.0	100.0
	2'-3"	100.0	100.0	100.0	100.0	88.9	100.0
	2'-6"	100.0	100.0	100.0	100.0	80.0	100.0
	2'-9"	100.0	100.0	100.0	100.0	72.7	100.0
	3'-3"	100.0	100.0	100.0	100.0	61.5	100.0
10'-0"	1'-9"	100.0	100.0	100.0	100.0	100.0	100.0
	2'-0"	100.0	100.0	100.0	100.0	95.0	100.0
	2'-3"	100.0	100.0	100.0	100.0	84.4	100.0
	2'-6"	100.0	100.0	100.0	100.0	76.0	100.0
	2'-9"	100.0	100.0	100.0	100.0	69.1	100.0
	3'-3"	100.0	100.0	100.0	100.0	58.5	100.0
10'-6"	1'-9"	100.0	100.0	100.0	100.0	100.0	100.0
	2'-0"	100.0	100.0	100.0	100.0	90.5	100.0
	2'-3"	100.0	100.0	100.0	100.0	80.4	100.0
	2'-6"	100.0	100.0	100.0	100.0	72.4	100.0
	2'-9"	100.0	100.0	100.0	100.0	65.8	100.0
	3'-3"	100.0	100.0	100.0	100.0	55.7	100.0
11'-0"	1'-9"	100.0	100.0	100.0	100.0	98.7	100.0
	2'-0"	100.0	100.0	100.0	100.0	86.4	100.0
	2'-3"	100.0	100.0	100.0	100.0	76.8	100.0
	2'-6"	100.0	100.0	100.0	100.0	69.1	100.0
	2'-9"	100.0	100.0	100.0	100.0	62.8	100.0
	3'-3"	100.0	100.0	100.0	100.0	53.1	100.0
11'-6"	1'-9"	100.0	100.0	100.0	100.0	94.4	100.0
	2'-0"	100.0	100.0	100.0	100.0	82.6	100.0
	2'-3"	100.0	100.0	100.0	100.0	73.4	100.0
	2'-6"	100.0	100.0	100.0	100.0	66.1	100.0
	2'-9"	100.0	100.0	100.0	100.0	60.1	100.0
	3'-3"	100.0	100.0	100.0	100.0	50.8	100.0
12'-0"	1'-9"	100.0	100.0	100.0	100.0	90.5	100.0
	2'-0"	100.0	100.0	100.0	100.0	79.2	100.0
	2'-3"	100.0	100.0	100.0	100.0	70.4	100.0
	2'-6"	100.0	100.0	100.0	100.0	63.3	100.0
	2'-9"	100.0	100.0	100.0	100.0	57.6	100.0
	3'-3"	100.0	100.0	100.0	100.0	48.7	100.0
12'-6"	1'-9"	100.0	100.0	100.0	100.0	86.9	100.0
	2'-0"	100.0	100.0	100.0	100.0	76.0	100.0
	2'-3"	100.0	100.0	100.0	100.0	67.6	100.0
	2'-6"	100.0	100.0	100.0	100.0	60.8	100.0
	2'-9"	100.0	100.0	100.0	100.0	55.3	100.0
	3'-3"	100.0	100.0	100.0	100.0	46.8	100.0

OPTION #1 : 3 FASTENERS CONNECTION

MAXIMUM A.S.D DESIGN PRESSURE RATING (psf)

MAXIMUM MULLION SPAN "L" (ft-in)	EFFECTIVE SPACING b = $S_s/2$ "b" ft-in	POURED CONCRETE (Min. fc = 3ksi) SUBSTRATE – FASTENER TYPES			GROUT FILLED CONCRETE BLOCK SUBSTRATE – FASTENER TYPES		1/4" Min. THK ASTM A-36 STEEL SUBSTRATE – FASTENER
		K	L	M	N	O	P
8'-5"	1'-9"	100.0	100.0	100.0	100.0	100.0	100.0
	2'-0"	100.0	100.0	100.0	100.0	100.0	100.0
	2'-3"	100.0	100.0	100.0	100.0	100.0	100.0
	2'-6"	100.0	100.0	100.0	100.0	100.0	100.0
	2'-9"	100.0	100.0	100.0	100.0	100.0	100.0
	3'-3"	100.0	100.0	100.0	100.0	100.0	100.0
8'-6"	1'-9"	100.0	100.0	100.0	100.0	100.0	100.0
	2'-0"	100.0	100.0	100.0	100.0	100.0	100.0
	2'-3"	100.0	100.0	100.0	100.0	100.0	100.0
	2'-6"	100.0	100.0	100.0	100.0	100.0	100.0
	2'-9"	100.0	100.0	100.0	100.0	100.0	100.0
	3'-3"	100.0	100.0	100.0	100.0	100.0	100.0
9'-0"	1'-9"	100.0	100.0	100.0	100.0	100.0	100.0
	2'-0"	100.0	100.0	100.0	100.0	100.0	100.0
	2'-3"	100.0	100.0	100.0	100.0	100.0	100.0
	2'-6"	100.0	100.0	100.0	100.0	100.0	100.0
	2'-9"	100.0	100.0	100.0	100.0	100.0	100.0
	3'-3"	100.0	100.0	100.0	100.0	97.4	100.0
9'-6"	1'-9"	100.0	100.0	100.0	100.0	100.0	100.0
	2'-0"	100.0	100.0	100.0	100.0	100.0	100.0
	2'-3"	100.0	100.0	100.0	100.0	100.0	100.0
	2'-6"	100.0	100.0	100.0	100.0	100.0	100.0
	2'-9"	100.0	100.0	100.0	100.0	100.0	100.0
	3'-3"	100.0	100.0	100.0	100.0	92.3	100.0
10'-0"	1'-9"	100.0	100.0	100.0	100.0	100.0	100.0
	2'-0"	100.0	100.0	100.0	100.0	100.0	100.0
	2'-3"	100.0	100.0	100.0	100.0	100.0	100.0
	2'-6"	100.0	100.0	100.0	100.0	100.0	100.0
	2'-9"	100.0	100.0	100.0	100.0	100.0	100.0
	3'-3"	100.0	100.0	100.0	100.0	87.7	100.0
10'-6"	1'-9"	100.0	100.0	100.0	100.0	100.0	100.0
	2'-0"	100.0	100.0	100.0	100.0	100.0	100.0
	2'-3"	100.0	100.0	100.0	100.0	100.0	100.0
	2'-6"	100.0	100.0	100.0	100.0	100.0	100.0
	2'-9"	100.0	100.0	100.0	100.0	98.7	100.0
	3'-3"	100.0	100.0	100.0	100.0	83.5	100.0
11'-0"	1'-9"	100.0	100.0	100.0	100.0	100.0	100.0
	2'-0"	100.0	100.0	100.0	100.0	100.0	100.0
	2'-3"	100.0	100.0	100.0	100.0	100.0	100.0
	2'-6"	100.0	100.0	100.0	100.0	100.0	100.0
	2'-9"	100.0	100.0	100.0	100.0	94.2	100.0
	3'-3"	100.0	100.0	100.0	100.0	79.7	100.0
11'-6"	1'-9"	100.0	100.0	100.0	100.0	100.0	100.0
	2'-0"	100.0	100.0	100.0	100.0	100.0	100.0
	2'-3"	100.0	100.0	100.0	100.0	100.0	100.0
	2'-6"	100.0	100.0	100.0	100.0	99.1	100.0
	2'-9"	100.0	100.0	100.0	100.0	90.1	100.0
	3'-3"	100.0	100.0	100.0	100.0	76.3	100.0
12'-0"	1'-9"	100.0	100.0	100.0	100.0	100.0	100.0
	2'-0"	100.0	100.0	100.0	100.0	100.0	100.0
	2'-3"	100.0	100.0	100.0	100.0	100.0	100.0
	2'-6"	100.0	100.0	100.0	100.0	95.0	100.0
	2'-9"	100.0	100.0	100.0	100.0	86.4	100.0
	3'-3"	100.0	100.0	100.0	100.0	73.1	100.0
12'-6"	1'-9"	100.0	100.0	100.0	100.0	100.0	100.0
	2'-0"	100.0	100.0	100.0	100.0	100.0	100.0
	2'-3"	100.0	100.0	100.0	100.0	100.0	100.0
	2'-6"	100.0	100.0	100.0	100.0	91.2	100.0
	2'-9"	100.0	100.0	100.0	100.0	82.9	100.0
	3'-3"	100.0	100.0	100.0	100.0	70.2	100.0

OPTION #2 : 4 FASTENERS CONNECTION

MAXIMUM A.S.D. DESIGN PRESSURE RATING (psf)

MAXIMUM MULLION SPAN "L" (ft-in)	EFFECTIVE SPACING b = $S_s/2$ "b" ft-in	POURED CONCRETE (Min. fc = 3ksi) SUBSTRATE – FASTENER TYPES			GROUT FILLED CONCRETE BLOCK SUBSTRATE – FASTENER TYPES		1/4" Min. THK ASTM A-36 STEEL SUBSTRATE – FASTENER
		K	L	M	N	O	P
8'-5"	1'-9"	100.0	100.0	100.0	100.0	100.0	100.0
	2'-0"	100.0	100.0	100.0	100.0	100.0	100.0
	2'-3"	100.0	100.0	100.0	100.0	100.0	100.0
	2'-6"	100.0	100.0	100.0	100.0	100.0	100.0
	2'-9"	100.0	100.0	100.0	100.0	100.0	100.0
	3'-3"	100.0	100.0	100.0	100.0	100.0	100.0
8'-6"	1'-9"	100.0	100.0	100.0	100.0	100.0	100.0
	2'-0"	100.0	100.0	100.0	100.0	100.0	100.0
	2'-3"	100.0	100.0	100.0	100.0	100.0	100.0
	2'-6"	100.0	100.0	100.0	100.0	100.0	100.0
	2'-9"	100.0	100.0	100.0	100.0	100.0	100.0
	3'-3"	100.0	100.0	100.0	100.0	100.0	100.0
9'-0"	1'-9"	100.0	100.0	100.0	100.0	100.0	100.0
	2'-0"	100.0	100.0	100.0	100.0	100.0	100.0
	2'-3"	100.0	100.0	100.0	100.0	100.0	100.0
	2'-6"	100.0	100.0	100.0	100.0	100.0	100.0
	2'-9"	100.0	100.0	100.0	100.0	100.0	100.0
	3'-3"	100.0	100.0	100.0	100.0	100.0	100.0
9'-6"	1'-9"	100.0	100.0	100.0	100.0	100.0	100.0
	2'-0"	100.0	100.0	100.0	100.0	100.0	100.0
	2'-3"	100.0	100.0	100.0	100.0	100.0	100.0
	2'-6"	100.0	100.0	100.0	100.0	100.0	100.0
	2'-9"	100.0	100.0	100.0	100.0	100.0	100.0
	3'-3"	100.0	100.0	100.0	100.0	100.0	100.0
10'-0"	1'-9"	100.0	100.0	100.0	100.0	100.0	100.0
	2'-0"	100.0	100.0	100.0	100.0	100.0	100.0
	2'-3"	100.0	100.0	100.0	100.0	100.0	100.0
	2'-6"	100.0	100.0	100.0	100.0	100.0	100.0
	2'-9"	100.0	100.0	100.0	100.0	100.0	100.0
	3'-3"	100.0	100.0	100.0	100.0	100.0	100.0
10'-6"	1'-9"	100.0	100.0	100.0	100.0	100.0	100.0
	2'-0"	100.0	100.0	100.0	100.0	100.0	100.0
	2'-3"	100.0	100.0	100.0	100.0	100.0	100.0
	2'-6"	100.0	100.0	100.0	100.0	100.0	100.0
	2'-9"	100.0	100.0	100.0	100.0	100.0	100.0
	3'-3"	100.0	100.0	100.0	100.0	100.0	100.0
11'-0"	1'-9"	100.0	100.0	100.0	100.0	100.0	100.0
	2'-0"	100.0	100.0	100.0	100.0	100.0	100.0
	2'-3"	100.0	100.0	100.0	100.0	100.0	100.0
	2'-6"	100.0	100.0	100.0	100.0	100.0	100.0
	2'-9"	100.0	100.0	100.0	100.0	100.0	100.0
	3'-3"	100.0	100.0	100.0	100.0	100.0	100.0
11'-6"	1'-9"	100.0	100.0	100.0	100.0	100.0	100.0
	2'-0"	100.0	100.0	100.0	100.0	100.0	100.0
	2'-3"	100.0	100.0	100.0	100.0	100.0	100.0
	2'-6"	100.0	100.0	100.0	100.0	100.0	100.0
	2'-9"	100.0	100.0	100.0	100.0	100.0	100.0
	3'-3"	100.0	100.0	100.0	100.0	100.0	100.0
12'-0"	1'-9"	100.0	100.0	100.0	100.0	100.0	100.0
	2'-0"	100.0	100.0	100.0	100.0	100.0	100.0
	2'-3"	100.0	100.0	100.0	100.0	100.0	100.0
	2'-6"	100.0	100.0	100.0	100.0	100.0	100.0
	2'-9"	100.0	100.0	100.0	100.0	100.0	100.0
	3'-3"	100.0	100.0	100.0	100.0	97.4	100.0
12'-6"	1'-9"	100.0	100.0	100.0	100.0	100.0	100.0
	2'-0"	100.0	100.0	100.0	100.0	100.0	100.0
	2'-3"	100.0	100.0	100.0	100.0	100.0	100.0
	2'-6"	100.0	100.0	100.0	100.0	100.0	100.0
	2'-9"	100.0	100.0	100.0	100.0	100.0	100.0
	3'-3"	100.0	100.0	100.0	100.0	93.5	100.0

* SEE SHEET 9 FOR EFFECTIVE SPACING DEFINITION AT ISOMETRIC.

OPTION #1 (ELEVATION)
(2) FASTENERS CONNECTION

OPTION # 2 (ELEVATION)
(3) FASTENERS CONNECTION

OPTION # 3 (ELEVATION)
(4) FASTENERS CONNECTION

(B) FASTENER TYPES REQUIREMENTS:

K - 1/2"Ø HILTI KWIK BOLT TZ ANCHOR W/ 2" Min. EMBEDMENT INTO POURED CONCRETE (Min. f'c = 3 ksi) BEYOND ANY FINISH MATERIAL, W/ 4" MIN. EDGE DISTANCE.

L - 1/2"Ø HILTI KWIK BOLT 3 ANCHOR W/ 3 1/2" Min. EMBEDMENT INTO POURED CONCRETE (Min. f'c = 3 ksi) BEYOND ANY FINISH MATERIAL, W/ 4" MIN. EDGE DISTANCE.

M - 1/2"Ø HILTI HUS-H SCREW ANCHOR W/ 3" Min. EMBEDMENT INTO POURED CONCRETE (Min. f'c = 3 ksi) BEYOND ANY FINISH MATERIAL, W/ 4" MIN. EDGE DISTANCE.

N - 1/2"Ø HILTI KWIK BOLT 3 ANCHOR W/ 3" Min. EMBEDMENT INTO GROUT FILLED CONCRETE BLOCK BEYOND ANY FINISH MATERIAL, W/ 4" MIN. EDGE DISTANCE.

O - 1/2"Ø HILTI HUS-H SCREW ANCHOR W/ 2 3/4" Min. EMBEDMENT INTO GROUT FILLED CONCRETE BLOCK BEYOND ANY FINISH MATERIAL, W/ 3 3/4" MIN. EDGE DISTANCE.

P - 1/2"Ø-13 TYPE "F" GRADE 5 BOLT TO 1/4" MIN. THK. ASTM A-36 STEEL W/ 1" MIN. EDGE DISTANCE OR 1/2"Ø-13 SAE GRADE 5, GALVANIZED STEEL BOLT W/ LOCK WASHER & NUT TO 1/4" MIN. THK. ASTM A-36 STEEL & MIN. E.D. = 1".

FLORIDA BUILDING CODE (High Velocity Hurricane Zone)

HR-250 CAPTURED CURTAIN WALL SYSTEM
LARGE MISSILE IMPACT LAMINATED GLASS

Oldcastle BuildingEnvelope™
803 Airport Rd - Terrell, TX 75160
www.OldcastleBE.com - Phone 800-869-4567

M.C.V./A.G. DRAWN BY:
11/18/11 DATE
11–124 DRAWING No
SHEET 16 OF 36

REV. No	DESCRIPTION	DATE	REV. No	DESCRIPTION	DATE
1	OLD 10-103	11/18/11	3	-	-
2	-	-	4	-	-

©2011 TILTECO, INC

TILTECO INC.
TILLIT TESTING & ENGINEERING COMPANY
6355 N.W. 36th. St., Ste. 305, VIRGINIA GARDENS, FL 33166
Phone : (305)871-1530 . Fax : (305)871-1531
e-mail: tilteco@aol.com
EB-0006719
WALTER A. TILLIT Jr. P.E.
FLORIDA Lic. # 44167

WALTER A. TILLIT JR. LICENSE No. 44167 STATE OF FLORIDA PROFESSIONAL ENGINEER

P.E. SEAL/SIGNATURE/DATE

PRODUCT REVISED
as complying with the Florida Building Code
Acceptance No 12-0104.05
Expiration Date Apr 5, 2016
By [signature]
Miami Dade Product Control

MIAMI-DADE COUNTY

MAXIMUM A.S.D. DESIGN PRESSURE RATING FOR JAMBS AT TWIN SPAN CURTAIN WALL FASTENED TO EXISTING STRUCTURE W 1/2"Ø FASTENERS (CONTINUED)

OPTION #1 : 2 FASTENERS CONNECTION

MAXIMUM MULLION SPAN "L" (ft-in)	EFFECTIVE SPACING b = S_s/2 * "b" (ft-in)	MAXIMUM A.S.D. DESIGN PRESSURE RATING (psf)					
		POURED CONCRETE (Min. fc = 3ksi) SUBSTRATE			GROUT FILLED CONCRETE BLOCK SUBSTRATE		1/4" Min. THK ASTM A-36 STEEL SUBSTRATE
		FASTENER TYPES			FASTENER TYPES		FASTENER
		K	L	M	N	O	P
8 '- 5 "	1 '- 9 "	90.0	90.0	90.0	90.0	77.6	90.0
	2 '- 0 "	90.0	90.0	90.0	90.0	67.9	90.0
	2 '- 3 "	90.0	90.0	90.0	90.0	60.3	90.0
	2 '- 6 "	90.0	90.0	90.0	90.0	54.3	90.0
	2 '- 9 "	90.0	90.0	87.0	90.0	49.4	90.0
8 '- 6 "	1 '- 9 "	90.0	90.0	90.0	90.0	77.6	90.0
	2 '- 0 "	90.0	90.0	90.0	90.0	67.9	90.0
	2 '- 3 "	90.0	90.0	90.0	90.0	60.3	90.0
	2 '- 6 "	90.0	90.0	90.0	90.0	54.3	90.0
	2 '- 9 "	90.0	90.0	87.0	90.0	49.4	90.0
9 '- 0 "	1 '- 9 "	90.0	90.0	90.0	90.0	77.6	90.0
	2 '- 0 "	90.0	90.0	90.0	90.0	67.9	90.0
	2 '- 3 "	90.0	90.0	90.0	90.0	60.3	90.0
	2 '- 6 "	90.0	90.0	90.0	90.0	54.3	90.0
	2 '- 9 "	90.0	90.0	87.0	90.0	49.4	90.0
9 '- 6 "	1 '- 9 "	90.0	90.0	90.0	90.0	77.6	90.0
	2 '- 0 "	90.0	90.0	90.0	90.0	67.9	90.0
	2 '- 3 "	90.0	90.0	90.0	90.0	60.3	90.0
	2 '- 6 "	90.0	90.0	90.0	90.0	54.3	90.0
	2 '- 9 "	90.0	90.0	87.0	90.0	49.4	90.0
10 '- 0 "	1 '- 9 "	90.0	90.0	90.0	90.0	77.6	90.0
	2 '- 0 "	90.0	90.0	90.0	90.0	67.9	90.0
	2 '- 3 "	90.0	90.0	90.0	90.0	60.3	90.0
	2 '- 6 "	90.0	90.0	90.0	90.0	54.3	90.0
	2 '- 9 "	90.0	90.0	87.0	90.0	49.4	90.0
10 '- 6 "	1 '- 9 "	90.0	90.0	90.0	90.0	77.6	90.0
	2 '- 0 "	90.0	90.0	90.0	90.0	67.9	90.0
	2 '- 3 "	90.0	90.0	90.0	90.0	60.3	90.0
	2 '- 6 "	90.0	90.0	90.0	90.0	54.3	90.0
	2 '- 9 "	90.0	90.0	87.0	90.0	49.4	90.0
11 '- 0 "	1 '- 9 "	90.0	90.0	90.0	90.0	77.6	90.0
	2 '- 0 "	90.0	90.0	90.0	90.0	67.9	90.0
	2 '- 3 "	90.0	90.0	90.0	90.0	60.3	90.0
	2 '- 6 "	90.0	90.0	90.0	90.0	54.3	90.0
	2 '- 9 "	90.0	90.0	87.0	90.0	49.4	90.0
11 '- 6 "	1 '- 9 "	90.0	90.0	90.0	90.0	77.6	90.0
	2 '- 0 "	90.0	90.0	90.0	90.0	67.9	90.0
	2 '- 3 "	90.0	90.0	90.0	90.0	60.3	90.0
	2 '- 6 "	90.0	90.0	90.0	90.0	54.3	90.0
	2 '- 9 "	90.0	90.0	87.0	90.0	49.4	90.0
12 '- 0 "	1 '- 9 "	90.0	90.0	90.0	90.0	77.6	90.0
	2 '- 0 "	90.0	90.0	90.0	90.0	67.9	90.0
	2 '- 3 "	90.0	90.0	90.0	90.0	60.3	90.0
	2 '- 6 "	90.0	90.0	90.0	90.0	54.3	90.0
	2 '- 9 "	90.0	90.0	87.0	90.0	49.4	90.0
12 '- 6 "	1 '- 9 "	90.0	90.0	90.0	90.0	77.6	90.0
	2 '- 0 "	90.0	90.0	90.0	90.0	67.9	90.0
	2 '- 3 "	90.0	90.0	90.0	90.0	60.3	90.0
	2 '- 6 "	90.0	90.0	90.0	90.0	54.3	90.0
	2 '- 9 "	90.0	90.0	87.0	90.0	49.4	90.0

OPTION #2 : 3 FASTENERS CONNECTION

MAXIMUM MULLION SPAN "L" (ft-in)	EFFECTIVE SPACING b = S_s/2 * "b" (ft-in)	MAXIMUM A.S.D. DESIGN PRESSURE RATING (psf)					
		POURED CONCRETE (Min. fc = 3ksi) SUBSTRATE			GROUT FILLED CONCRETE BLOCK SUBSTRATE		1/4" Min. THK ASTM A-36 STEEL SUBSTRATE
		FASTENER TYPES			FASTENER TYPES		FASTENER
		K	L	M	N	O	P
8 '- 5 "	1 '- 9 "	90.0	90.0	90.0	90.0	90.0	90.0
	2 '- 0 "	90.0	90.0	90.0	90.0	90.0	90.0
	2 '- 3 "	90.0	90.0	90.0	90.0	90.0	90.0
	2 '- 6 "	90.0	90.0	90.0	90.0	81.4	90.0
	2 '- 9 "	90.0	90.0	90.0	90.0	74.0	90.0
8 '- 6 "	1 '- 9 "	90.0	90.0	90.0	90.0	90.0	90.0
	2 '- 0 "	90.0	90.0	90.0	90.0	90.0	90.0
	2 '- 3 "	90.0	90.0	90.0	90.0	90.0	90.0
	2 '- 6 "	90.0	90.0	90.0	90.0	81.4	90.0
	2 '- 9 "	90.0	90.0	90.0	90.0	74.0	90.0
9 '- 0 "	1 '- 9 "	90.0	90.0	90.0	90.0	90.0	90.0
	2 '- 0 "	90.0	90.0	90.0	90.0	90.0	90.0
	2 '- 3 "	90.0	90.0	90.0	90.0	90.0	90.0
	2 '- 6 "	90.0	90.0	90.0	90.0	81.4	90.0
	2 '- 9 "	90.0	90.0	90.0	90.0	74.0	90.0
9 '- 6 "	1 '- 9 "	90.0	90.0	90.0	90.0	90.0	90.0
	2 '- 0 "	90.0	90.0	90.0	90.0	90.0	90.0
	2 '- 3 "	90.0	90.0	90.0	90.0	90.0	90.0
	2 '- 6 "	90.0	90.0	90.0	90.0	81.4	90.0
	2 '- 9 "	90.0	90.0	90.0	90.0	74.0	90.0
10 '- 0 "	1 '- 9 "	90.0	90.0	90.0	90.0	90.0	90.0
	2 '- 0 "	90.0	90.0	90.0	90.0	90.0	90.0
	2 '- 3 "	90.0	90.0	90.0	90.0	90.0	90.0
	2 '- 6 "	90.0	90.0	90.0	90.0	81.4	90.0
	2 '- 9 "	90.0	90.0	90.0	90.0	74.0	90.0
10 '- 6 "	1 '- 9 "	90.0	90.0	90.0	90.0	90.0	90.0
	2 '- 0 "	90.0	90.0	90.0	90.0	90.0	90.0
	2 '- 3 "	90.0	90.0	90.0	90.0	90.0	90.0
	2 '- 6 "	90.0	90.0	90.0	90.0	81.4	90.0
	2 '- 9 "	90.0	90.0	90.0	90.0	74.0	90.0
11 '- 0 "	1 '- 9 "	90.0	90.0	90.0	90.0	90.0	90.0
	2 '- 0 "	90.0	90.0	90.0	90.0	90.0	90.0
	2 '- 3 "	90.0	90.0	90.0	90.0	90.0	90.0
	2 '- 6 "	90.0	90.0	90.0	90.0	81.4	90.0
	2 '- 9 "	90.0	90.0	90.0	90.0	74.0	90.0
11 '- 6 "	1 '- 9 "	90.0	90.0	90.0	90.0	90.0	90.0
	2 '- 0 "	90.0	90.0	90.0	90.0	90.0	90.0
	2 '- 3 "	90.0	90.0	90.0	90.0	90.0	90.0
	2 '- 6 "	90.0	90.0	90.0	90.0	81.4	90.0
	2 '- 9 "	90.0	90.0	90.0	90.0	74.0	90.0
12 '- 0 "	1 '- 9 "	90.0	90.0	90.0	90.0	90.0	90.0
	2 '- 0 "	90.0	90.0	90.0	90.0	90.0	90.0
	2 '- 3 "	90.0	90.0	90.0	90.0	90.0	90.0
	2 '- 6 "	90.0	90.0	90.0	90.0	81.4	90.0
	2 '- 9 "	90.0	90.0	90.0	90.0	74.0	90.0
12 '- 6 "	1 '- 9 "	90.0	90.0	90.0	90.0	90.0	90.0
	2 '- 0 "	90.0	90.0	90.0	90.0	90.0	90.0
	2 '- 3 "	90.0	90.0	90.0	90.0	90.0	90.0
	2 '- 6 "	90.0	90.0	90.0	90.0	81.4	90.0
	2 '- 9 "	90.0	90.0	90.0	90.0	74.0	90.0

OPTION #3: 4 FASTENERS CONNECTION

MAXIMUM MULLION SPAN "L" (ft-in)	EFFECTIVE SPACING b = S_s/2 * "b" (ft-in)	MAXIMUM A.S.D. DESIGN PRESSURE RATING (psf)					
		POURED CONCRETE (Min. fc = 3ksi) SUBSTRATE			GROUT FILLED CONCRETE BLOCK SUBSTRATE		1/4" Min. THK ASTM A-36 STEEL SUBSTRATE
		FASTENER TYPES			FASTENER TYPES		FASTENER
		K	L	M	N	O	P
8 '- 5 "	1 '- 9 "	90.0	90.0	90.0	90.0	90.0	90.0
	2 '- 0 "	90.0	90.0	90.0	90.0	90.0	90.0
	2 '- 3 "	90.0	90.0	90.0	90.0	90.0	90.0
	2 '- 6 "	90.0	90.0	90.0	90.0	90.0	90.0
	2 '- 9 "	90.0	90.0	90.0	90.0	90.0	90.0
8 '- 6 "	1 '- 9 "	90.0	90.0	90.0	90.0	90.0	90.0
	2 '- 0 "	90.0	90.0	90.0	90.0	90.0	90.0
	2 '- 3 "	90.0	90.0	90.0	90.0	90.0	90.0
	2 '- 6 "	90.0	90.0	90.0	90.0	90.0	90.0
	2 '- 9 "	90.0	90.0	90.0	90.0	90.0	90.0
9 '- 0 "	1 '- 9 "	90.0	90.0	90.0	90.0	90.0	90.0
	2 '- 0 "	90.0	90.0	90.0	90.0	90.0	90.0
	2 '- 3 "	90.0	90.0	90.0	90.0	90.0	90.0
	2 '- 6 "	90.0	90.0	90.0	90.0	90.0	90.0
	2 '- 9 "	90.0	90.0	90.0	90.0	90.0	90.0
9 '- 6 "	1 '- 9 "	90.0	90.0	90.0	90.0	90.0	90.0
	2 '- 0 "	90.0	90.0	90.0	90.0	90.0	90.0
	2 '- 3 "	90.0	90.0	90.0	90.0	90.0	90.0
	2 '- 6 "	90.0	90.0	90.0	90.0	90.0	90.0
	2 '- 9 "	90.0	90.0	90.0	90.0	90.0	90.0
10 '- 0 "	1 '- 9 "	90.0	90.0	90.0	90.0	90.0	90.0
	2 '- 0 "	90.0	90.0	90.0	90.0	90.0	90.0
	2 '- 3 "	90.0	90.0	90.0	90.0	90.0	90.0
	2 '- 6 "	90.0	90.0	90.0	90.0	90.0	90.0
	2 '- 9 "	90.0	90.0	90.0	90.0	90.0	90.0
10 '- 6 "	1 '- 9 "	90.0	90.0	90.0	90.0	90.0	90.0
	2 '- 0 "	90.0	90.0	90.0	90.0	90.0	90.0
	2 '- 3 "	90.0	90.0	90.0	90.0	90.0	90.0
	2 '- 6 "	90.0	90.0	90.0	90.0	90.0	90.0
	2 '- 9 "	90.0	90.0	90.0	90.0	90.0	90.0
11 '- 0 "	1 '- 9 "	90.0	90.0	90.0	90.0	90.0	90.0
	2 '- 0 "	90.0	90.0	90.0	90.0	90.0	90.0
	2 '- 3 "	90.0	90.0	90.0	90.0	90.0	90.0
	2 '- 6 "	90.0	90.0	90.0	90.0	90.0	90.0
	2 '- 9 "	90.0	90.0	90.0	90.0	90.0	90.0
11 '- 6 "	1 '- 9 "	90.0	90.0	90.0	90.0	90.0	90.0
	2 '- 0 "	90.0	90.0	90.0	90.0	90.0	90.0
	2 '- 3 "	90.0	90.0	90.0	90.0	90.0	90.0
	2 '- 6 "	90.0	90.0	90.0	90.0	90.0	90.0
	2 '- 9 "	90.0	90.0	90.0	90.0	90.0	90.0
12 '- 0 "	1 '- 9 "	90.0	90.0	90.0	90.0	90.0	90.0
	2 '- 0 "	90.0	90.0	90.0	90.0	90.0	90.0
	2 '- 3 "	90.0	90.0	90.0	90.0	90.0	90.0
	2 '- 6 "	90.0	90.0	90.0	90.0	90.0	90.0
	2 '- 9 "	90.0	90.0	90.0	90.0	90.0	90.0
12 '- 6 "	1 '- 9 "	90.0	90.0	90.0	90.0	90.0	90.0
	2 '- 0 "	90.0	90.0	90.0	90.0	90.0	90.0
	2 '- 3 "	90.0	90.0	90.0	90.0	90.0	90.0
	2 '- 6 "	90.0	90.0	90.0	90.0	90.0	90.0
	2 '- 9 "	90.0	90.0	90.0	90.0	90.0	90.0

* SEE SHEET 10 FOR EFFECTIVE SPACING DEFINITION AT ISOMETRIC.

OPTION # 1 (ELEVATION)
(2) FASTENERS CONNECTION

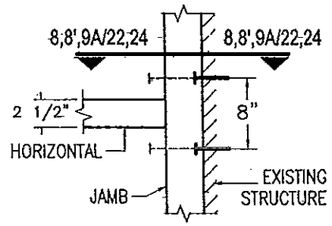

OPTION # 2 (ELEVATION)
(3) FASTENERS CONNECTION

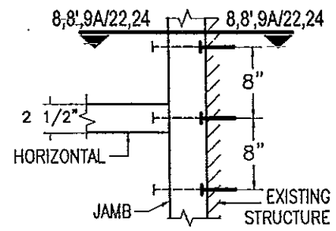

OPTION # 3 (ELEVATION)
(4) FASTENERS CONNECTION

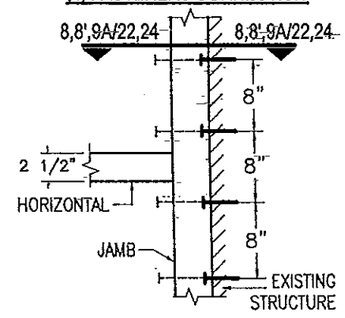

Ⓑ FASTENER TYPES REQUIREMENTS:

K - 1/2"Ø HILTI KWIK BOLT TZ ANCHOR W/ 2" Min. EMBEDMENT INTO POURED CONCRETE (Min. fc = 3 ksi) BEYOND ANY FINISH MATERIAL, W/ 4" MIN. EDGE DISTANCE.

L - 1/2"Ø HILTI KWIK BOLT 3 ANCHOR W/ 3 1/2" Min. EMBEDMENT INTO POURED CONCRETE (Min. fc = 3 ksi) BEYOND ANY FINISH MATERIAL, W/ 4" MIN. EDGE DISTANCE.

M - 1/2"Ø HILTI HUS-H SCREW ANCHOR W/ 3" Min. EMBEDMENT INTO POURED CONCRETE (Min. fc = 3 ksi) BEYOND ANY FINISH MATERIAL, W/ 4" MIN. EDGE DISTANCE.

N - 1/2"Ø HILTI KWIK BOLT 3 ANCHOR W/ 3" Min. EMBEDMENT INTO GROUT FILLED CONCRETE BLOCK BEYOND ANY FINISH MATERIAL, W/ 4". EDGE DISTANCE.

O - 1/2"Ø HILTI HUS-H SCREW ANCHOR W/ 3" Min. EMBEDMENT INTO GROUT FILLED CONCRETE BLOCK BEYOND ANY FINISH MATERIAL, W/ 3 3/4" MIN. EDGE DISTANCE.

P - 1/2"Ø-13 TYPE "F" GRADE 5 BOLT TO 1/4" MIN. THK. ASTM A-36 STEEL W/ 1" MIN. EDGE DISTANCE OR 1/2"Ø -13 SAE GALVANIZED STEEL GRADE 5 HHB THRU BOLT W/ NUT & LOCK WASHER TO 1/4" MIN. THK. ASTM A-36 STEEL W/ 1" MIN. EDGE DISTANCE.

FLORIDA BUILDING CODE (High Velocity Hurricane Zone)

M.C.V./A.G. DRAWN BY:
11/18/11 DATE
11-124 DRAWING No
SHEET 17 OF 35

HR-250 CAPTURED CURTAIN WALL SYSTEM
LARGE MISSILE IMPACT LAMINATED GLASS

Oldcastle BuildingEnvelope™
803 Airport Rd - Terrell, TX 75160
www.OldcastleBE.com - Phone 800-869-4567

REV. No	DESCRIPTION	DATE
1	OLD 10-103	11/16/11
2	-	-
3	-	-
4	-	-

©2011 TILTECO, INC

TILTECO INC.
TILLIT TESTING & ENGINEERING COMPANY
6355 N.W. 36th St. Ste. 305, VIRGINIA GARDENS, FL 33166
Phone : (305)871-1530 , Fax : (305)871-1531
e-mail: tilteco@aol.com
EB-0006719
WALTER A. TILLIT Jr. P.E.
FLORIDA Lic. # 44167

WALTER A. TILLIT JR. LICENSE # 44167 STATE OF FLORIDA PROFESSIONAL ENGINEER

P.E. SEAL/SIGNATURE/DATE

PRODUCT REVISED
as complying with the Florida
Building Code
Acceptance No 12010103.03
Expiration Date 03-5-2016
By
Miami Dade Product Control

MIAMI-DADE COUNTY

HEAD CONNECTION DETAILS (SIDE VIEWS)

SINGLE SPAN

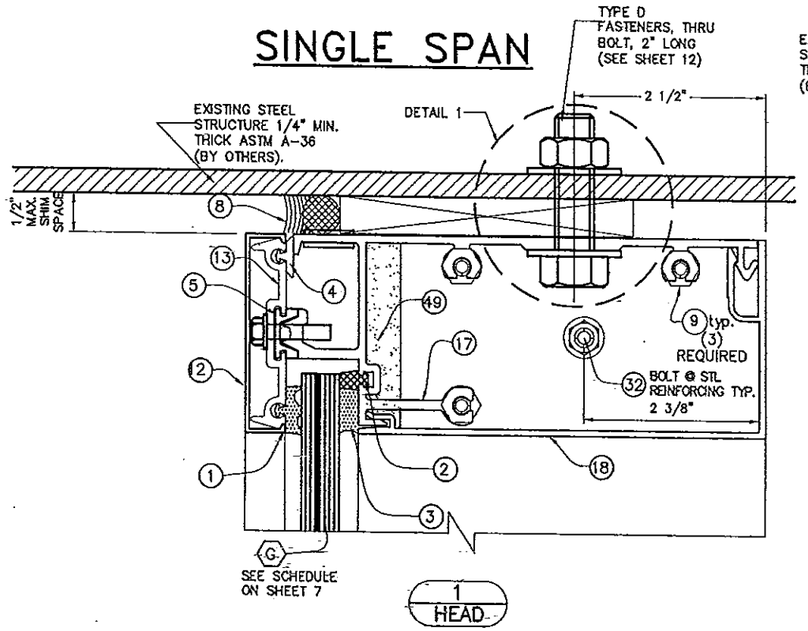

1 HEAD

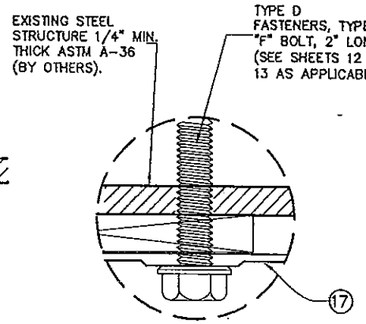

ALTERNATE FASTENER DETAIL 1

TWIN SPAN

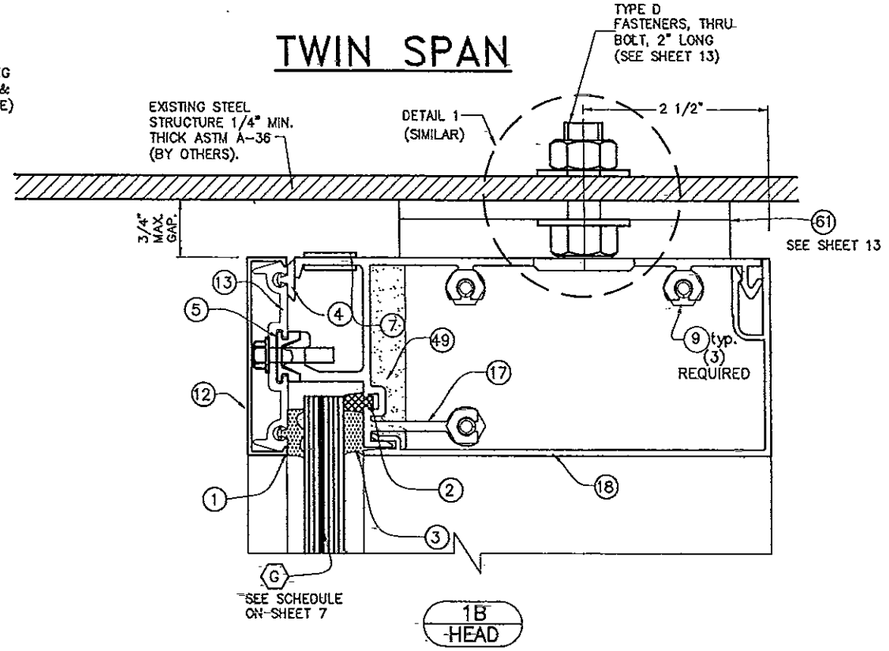

1B HEAD

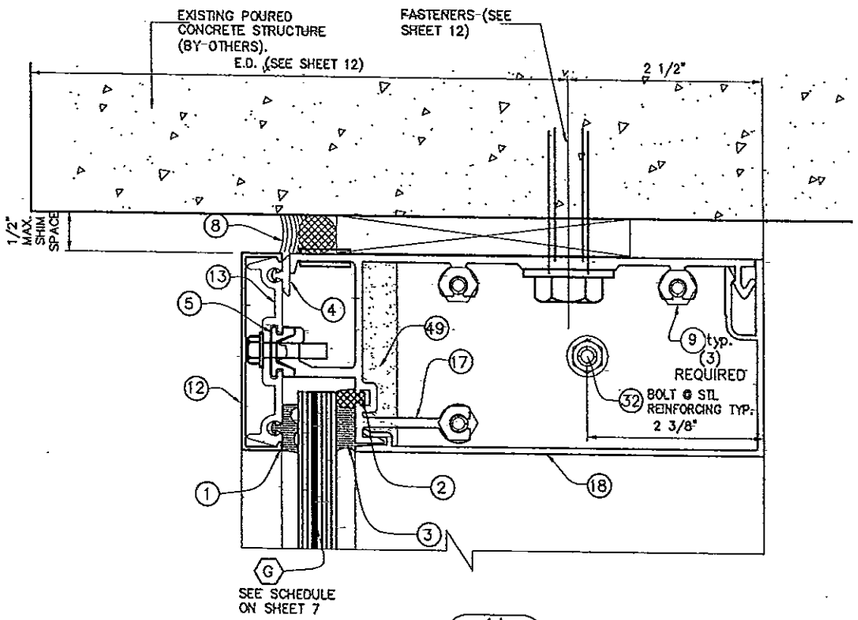

1A HEAD

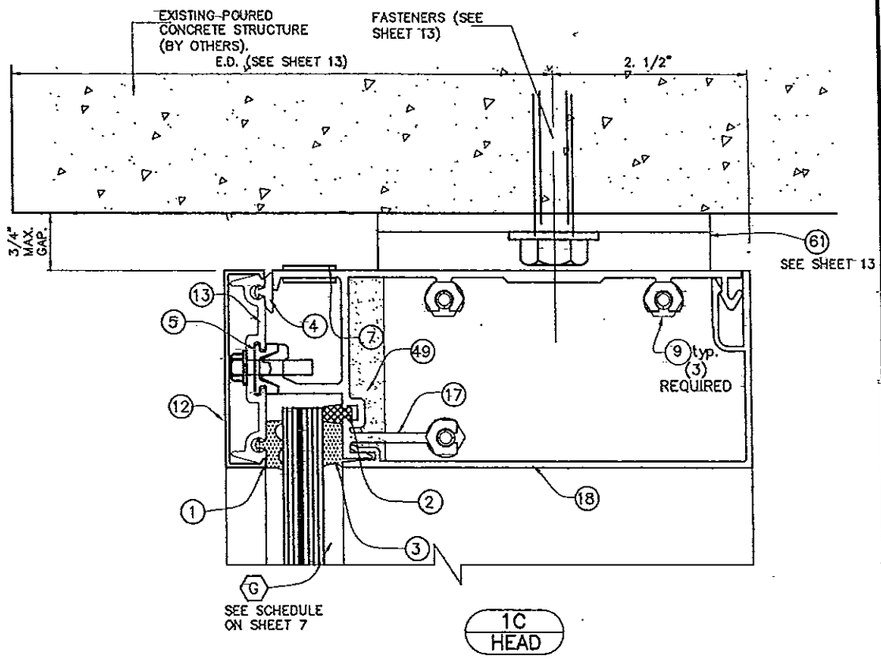

1C HEAD

NOTE: SEE ALSO DETAILS 1, 2, 3 & 4, & 18 ON SHEETS 25 & 28 RESPECTIVELY

FLORIDA BUILDING CODE (High Velocity Hurricane Zone)

©2011 TILTECO, INC

HR-250 CAPTURED CURTAIN WALL SYSTEM
LARGE MISSILE IMPACT LAMINATED GLASS

M.C.V./A.G. DRAWN BY:
11/18/11 DATE
11-124 DRAWING No
SHEET 18 OF 36

Oldcastle BuildingEnvelope™
803 Airport Rd., Terrell, TX 75160
www.OldcastleBE.com - Phone 800-869-4567

REV. No	DESCRIPTION	DATE
1	OLD 10-103	11/18/11
2	-	-
3	-	-
4	-	-

TILLIT TESTING & ENGINEERING COMPANY
6355 N.W. 36th. St. Ste. 305, VIRGINIA GARDENS, FL. 33166
Phone : (305)871-1530 . Fax : (305)871-1531
e-mail: tilteco@aol.com
EB-0006719
WALTER A. TILLIT Jr. P.E.
FLORIDA Lic. # 44167

WALTER A. TILLIT JR. LICENSED P.E. No. 44167 STATE OF FLORIDA PROFESSIONAL ENGINEER

P.E. SEAL/SIGNATURE/DATE

PRODUCT REVISED
as complying with the Florida
Building Code
Acceptance No 12-0109.05
Expiration Date 12-5-2016
By _____
Miami Dade Product Control

MIAMI-DADE COUNTY

HORIZONTAL CONNECTION DETAILS (SIDE VIEWS)

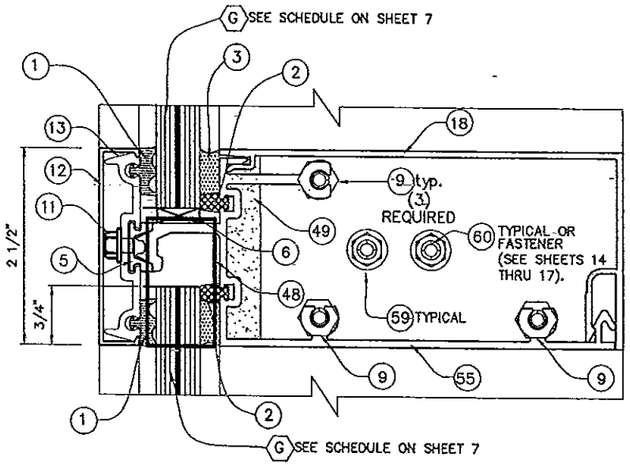

2
INT HORI

AT SINGLE OR TWIN SPAN

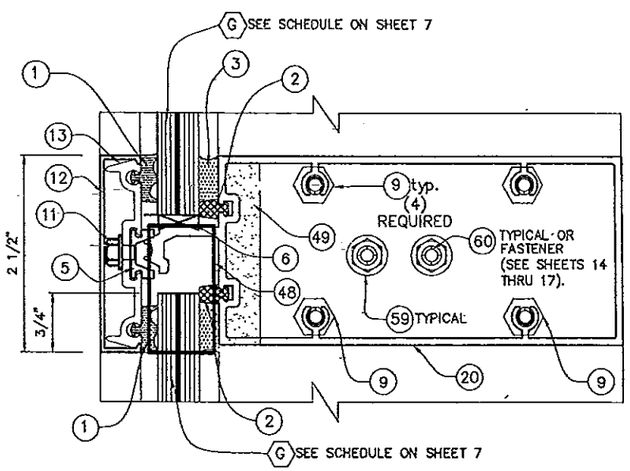

2A
INT HORI

AT SINGLE OR TWIN SPAN

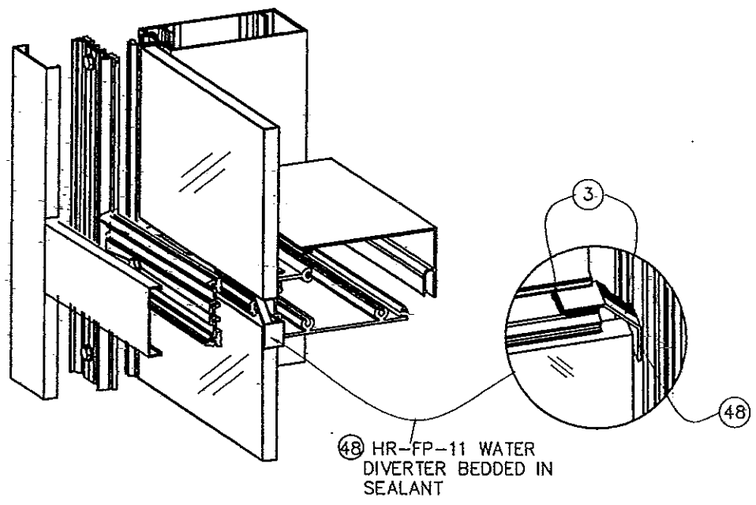

FLORIDA BUILDING CODE (High Velocity Hurricane Zone)

HR-250 CAPTURED CURTAIN WALL SYSTEM
LARGE MISSILE IMPACT LAMINATED GLASS

Oldcastle BuildingEnvelope™
803 Airport Rd - Terrell, TX 75160
www.OldcastleBE.com - Phone 800-869-4567

REV. No	DESCRIPTION	DATE
1	CLD 10-103	11/18/11
2	-	-
3	-	-
4	-	-

M.C.V./A.G. DRAWN BY:
11/18/11 DATE
11-124 DRAWING No
SHEET 19 OF 36

©2011 TILTECO, INC

TILLIT TESTING & ENGINEERING COMPANY
6355 N.W. 36th. St., Ste. 305, VIRGINIA GARDENS, FL. 33166
Phone : (305)871-1530 , Fax : (305)871-1531
e-mail: tilteco@aol.com
EB-0006719
WALTER A. TILLIT Jr. P.E.
FLORIDA Lic. # 44167

PRODUCT REVISED
as complying with the Florida
Building Code
Acceptance No 12-0104.05
Expiration Date 04-5-2016
By
Miami Dade Product Control

WALTER A. TILLIT JR. LICENSE No. 44167 STATE OF FLORIDA PROFESSIONAL ENGINEER

P.E. SEAL/SIGNATURE/DATE

MIAMI-DADE COUNTY

SILL CONNECTION DETAILS (SIDE VIEWS)

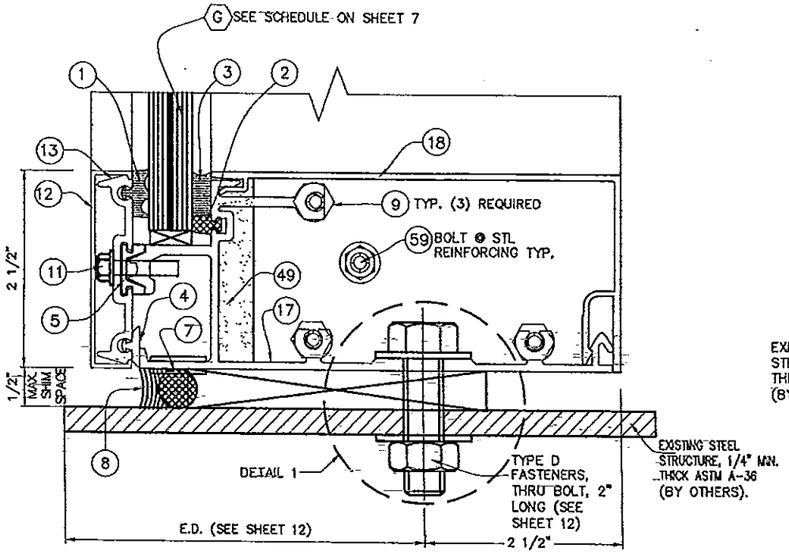

3
SILL

CONNECTION TO STEEL STRUCTURE

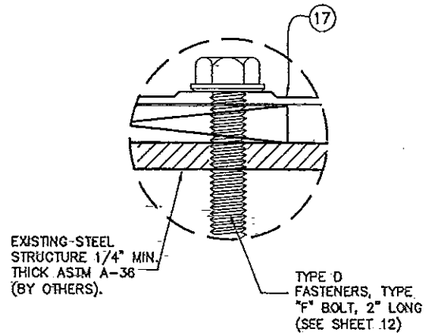

ALTERNATE FASTENER DETAIL 1

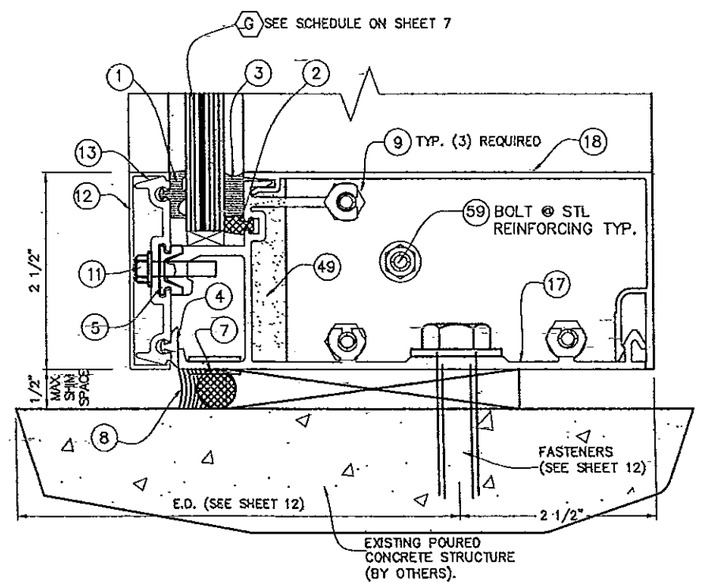

3
SILL

CONNECTION TO POURED CONCRETE STRUCTURE

NOTE: SEE ALSO DETAILS 1 THRU 4 ON SHEET 25

FLORIDA BUILDING CODE (High Velocity Hurricane Zone)

HR-250 CAPTURED CURTAIN WALL SYSTEM
LARGE MISSILE IMPACT LAMINATED GLASS

Oldcastle BuildingEnvelope™
803 Airport Rd - Terrell, TX 75160
www.OldcastleBE.com - Phone 800-869-4567

REV. No	DESCRIPTION	DATE
1	OLD 10-103	11/16/11
2	-	-
3	-	-
4	-	-

M.C.V./A.G. DRAWN BY:
11/18/11 DATE
11-124 DRAWING No
SHEET 20 OF 36

©2011 TILTECO, INC

TILTECO INC.
TESTING & ENGINEERING COMPANY
TILLIT TESTING & ENGINEERING COMPANY
6355 N.W. 36th. St., Ste. 305, VIRGINIA GARDENS, FL 33166
Phone : (305)871-1530 . Fax: : (305)871-1531
e-mail: tilteco@aol.com
EB-0006719
WALTER A. TILLIT Jr. P.E.
FLORIDA Lic. # 44167

WALTER A. TILLIT LICENSE No. 44167 STATE OF FLORIDA PROFESSIONAL ENGINEER

P.E. SEAL/SIGNATURE/DATE

PRODUCT REVISED
as complying with the Florida
Building Code
Acceptance No 12-0109.05
Expiration Date 2.17.2016
By
Miami Dade Product Control

MIAMI-DADE COUNTY

STANDARD MULLION DETAILS (PLAN)

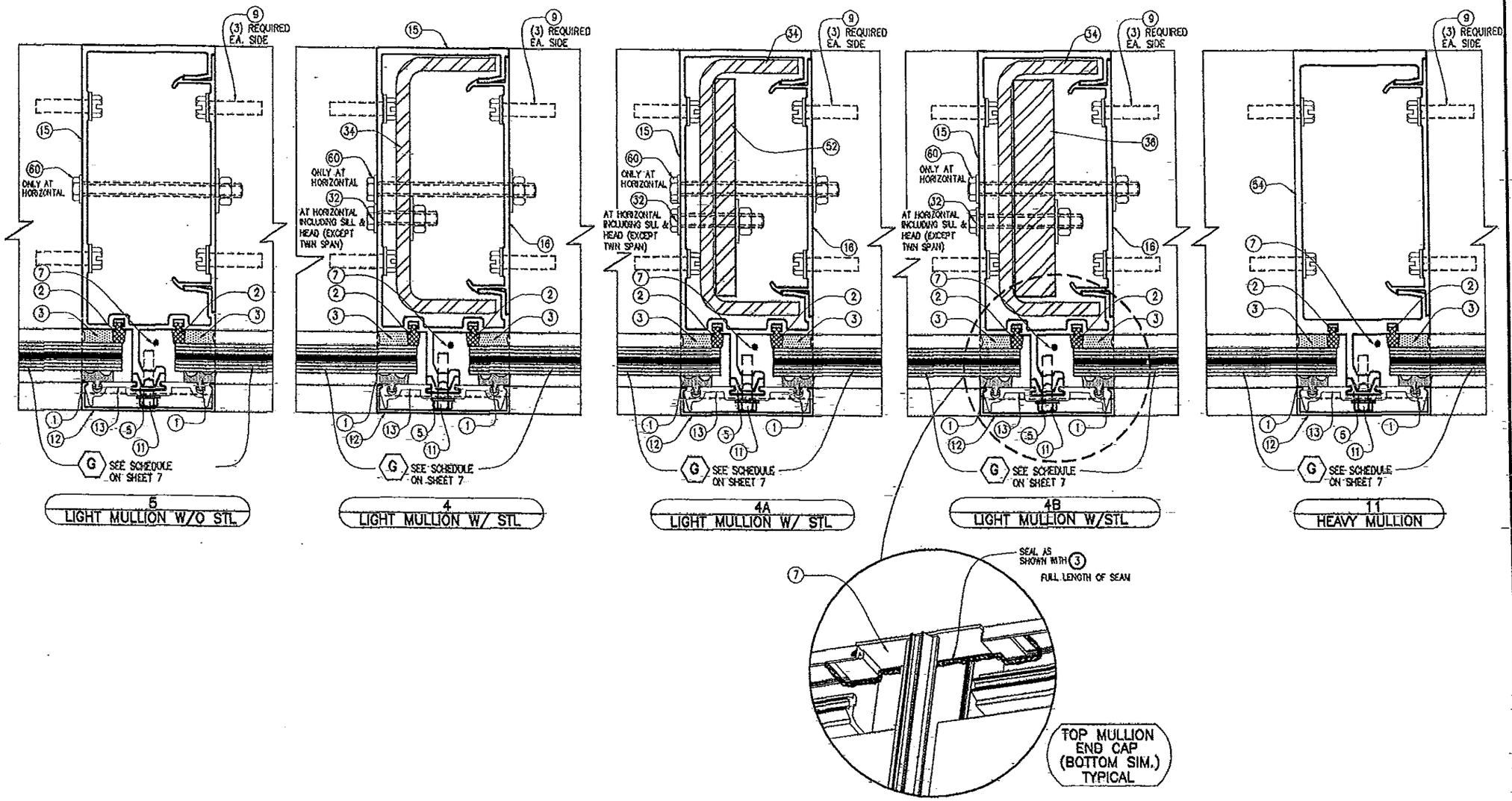

FLORIDA BUILDING CODE (High Velocity Hurricane Zone)

HR-250 CAPTURED CURTAIN WALL SYSTEM
LARGE MISSILE IMPACT LAMINATED GLASS

Oldcastle BuildingEnvelope™
803 Airport Rd - Terrell, TX 75160
www.OldcastleBE.com - Phone 800-869-4567

REV. No	DESCRIPTION	DATE	REV. No	DESCRIPTION	DATE
1	DUD 10-103	11/18/11	3	-	-
2	-	-	4	-	-

M.C.V./A.G.
DRAWN BY:

11/18/11
DATE

11-124
DRAWING No

SHEET 21 OF 35

©2011 TILTECO, INC

TILTECO INC.
TILLIT TESTING & ENGINEERING COMPANY
6355 N.W. 36th. St., Ste. 305, VIRGINIA GARDENS, FL 33166
Phone : (305)871-1530 . Fax : (305)871-1531
e-mail: tilteco@aol.com
EB-0006719
WALTER A. TILLIT Jr. P.E.
FLORIDA LIC. # 44167

WALTER A. TILLIT JR. LICENSE NO. 44167 STATE OF FLORIDA PROFESSIONAL ENGINEER

P.E. SEAL/SIGNATURE/DATE

PRODUCT REVISED
as complying with the Florida Building Code
Acceptance No 12-0109.05
Expiration Date Oct. 5, 2016
By [signature]
Miami Dade Product Control

MIAMI-DADE COUNTY

JAMB CONNECTIONS AT HORIZONTALS (PLAN)

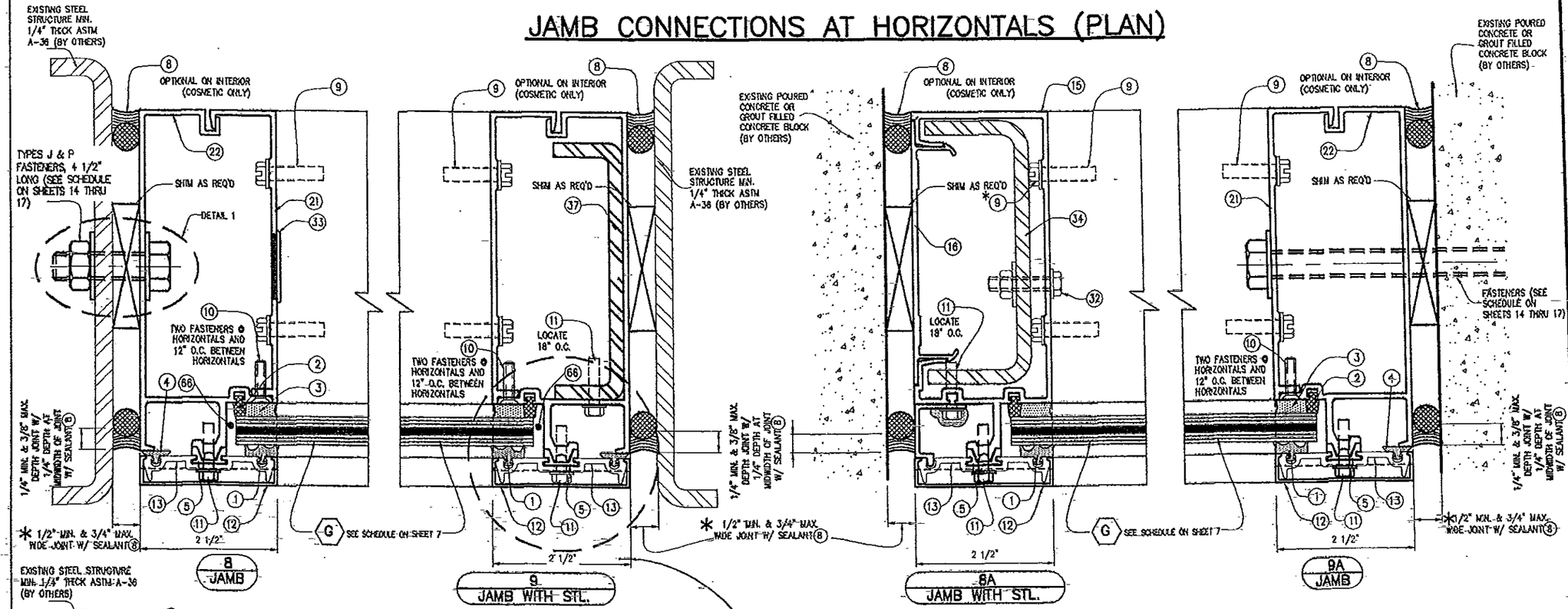

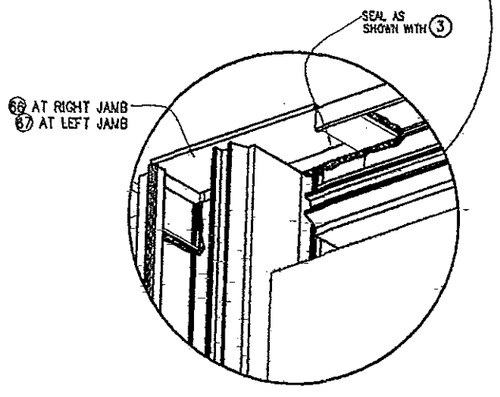

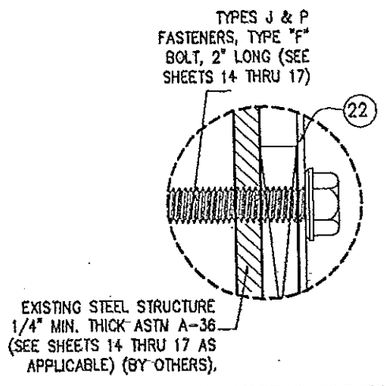

ALTERNATE FASTENER DETAIL 1

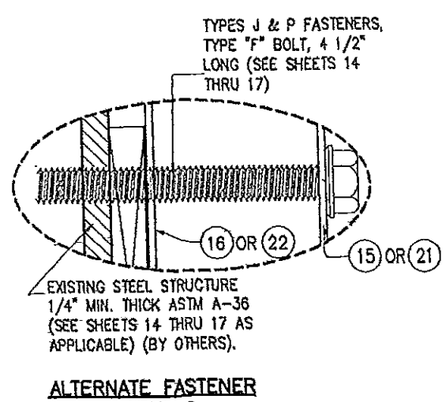

ALTERNATE FASTENER DETAIL 2

* NOTE: ABOVE INDICATED MAXIMUM AND MINIMUM VALUES FOR SPECIFIED SEALANT VERTICAL JOINT WIDTH AT JAMBS CONNECTED TO WALL HAVE BEEN DETERMINED ONLY TAKING INTO CONSIDERATION THE ACTUAL MOVEMENT OF GLASS WALL AT JAMBS DUE TO THERMAL, WIND AND ITS OWN CONSTRUCTION TOLERANCE, AND NOT PERFORMANCE FACTORS FROM THE SURROUNDING STRUCTURE.

FLORIDA BUILDING CODE (High Velocity Hurricane Zone)

HR-250 CAPTURED CURTAIN WALL SYSTEM
LARGE MISSILE IMPACT LAMINATED GLASS

Oldcastle BuildingEnvelope™
8133 Airport Rd - Terrell, TX 75160
www.OldcastleBE.com - Phone 800-869-4567

REV. No	DESCRIPTION	DATE
1	ECO 10-1165	11/18/11
2	-	-

DESCRIPTION	REV. No	DATE
-	-	-
-	3	-
-	4	-

M.G.V./A.G. DRAWN BY:
11/18/11 DATE
11-124 DRAWING No
SHEET 22 OF 36

©2011 TILTECO, INC

TILTECO INC.
TILLIT TESTING & ENGINEERING COMPANY
8335 NW 36th. St., Ste. 305, Miami, FL 33166
Phone : (305)871-1530 , Fax : (305)871-1531
e-mail: tiltecp@aol.com
EB-0006719
WALTER A. TILLIT Jr. P.E.
FLORIDA Lic. # 44167

WALTER A. TILLIT JR. LICENSE NO. 44167 STATE OF FLORIDA PROFESSIONAL ENGINEER
11/28/11
P.E. SEAL/SIGNATURE/DATE

PRODUCT REVISED
as complying with the Florida
Building Code
Acceptance No 12-0104.05
Expiration Date Oct 2, 2016
By
Miami Dade Product Control

MIAMI-DADE COUNTY

CORNER MULLION DETAILS (PLAN)

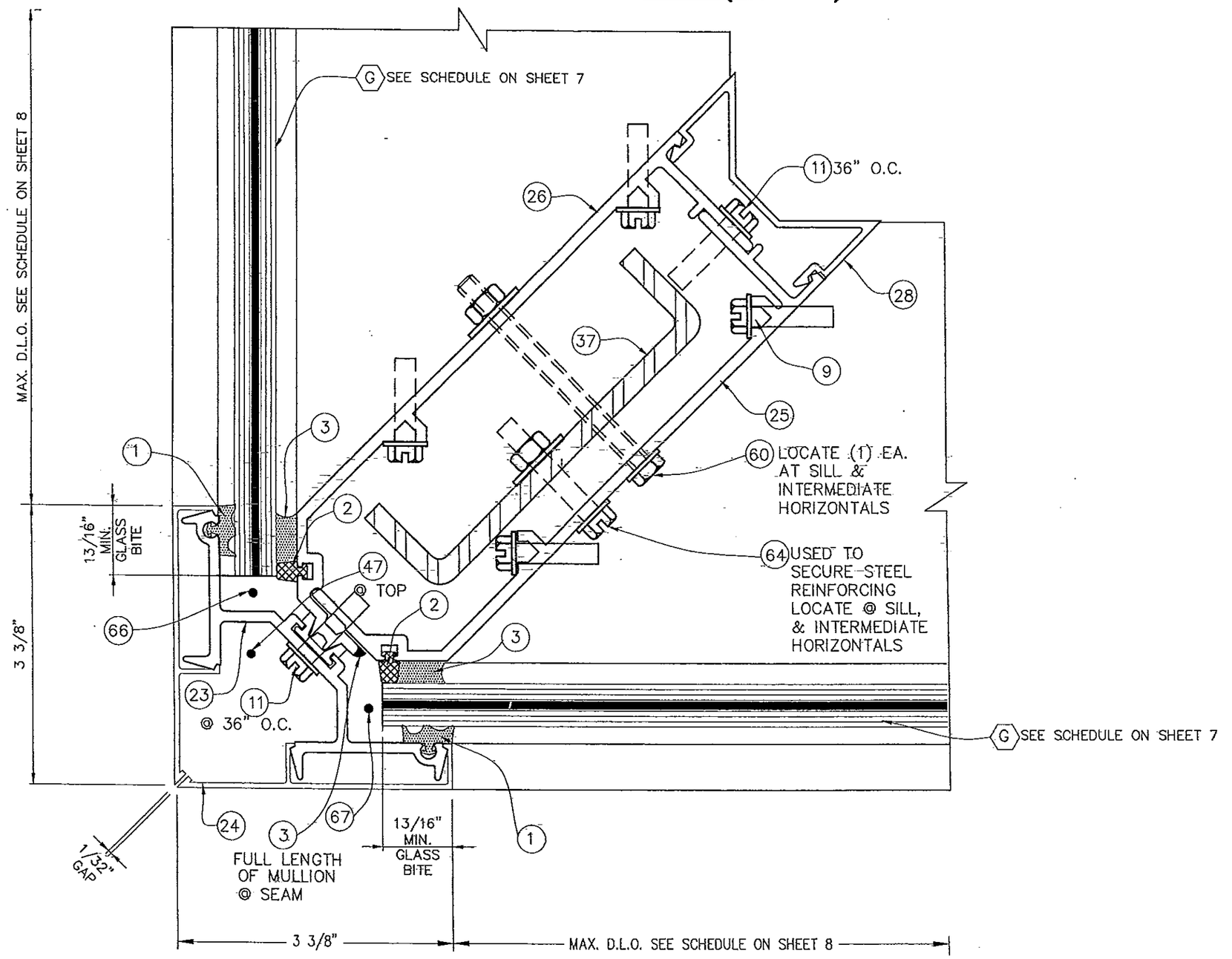

14
90 DEG CORNER CAPTURED PLAN

FLORIDA BUILDING CODE (High Velocity Hurricane Zone)

HR-250 CAPTURED CURTAIN WALL SYSTEM
LARGE MISSILE IMPACT LAMINATED GLASS

Oldcastle BuildingEnvelope™
803 Airport Rd - Terrell, TX 75160
www.OldcastleBE.com - Phone 800-869-4567

REV. No	DESCRIPTION	DATE
1	OLD 10-103	11/16/11
2	-	-
3	-	-
4	-	-

M.C.V./A.G. DRAWN BY:
11/18/11 DATE
11-124 DRAWING No
SHEET 23 OF 36

©2011 TILTECO, INC

TILTECO INC.
TILLIT TESTING & ENGINEERING COMPANY
6355 N.W. 36th. St., Ste. 305, VIRGINIA GARDENS, FL. 33166
Phone : (305)871-1530 , Fax: (305)871-1531
e-mail: tiltecofl@aol.com
FEB-00006719
WALTER A. TILLIT Jr. P.E.
FLORIDA Lic: # 44167

WALTER A. TILLIT JR. LICENSE No. 44167 STATE OF FLORIDA PROFESSIONAL ENGINEER

P.E. SEAL/SIGNATURE/DATE

PRODUCT REVISED
as complying with the Florida Building Code
Acceptance No 12010905
Expiration Date Oct 5, 2016
By
Miami Dade Product Control

MIAMI-DADE COUNTY

JAMBS CONNECTIONS AT INSIDE CORNER (PLAN)

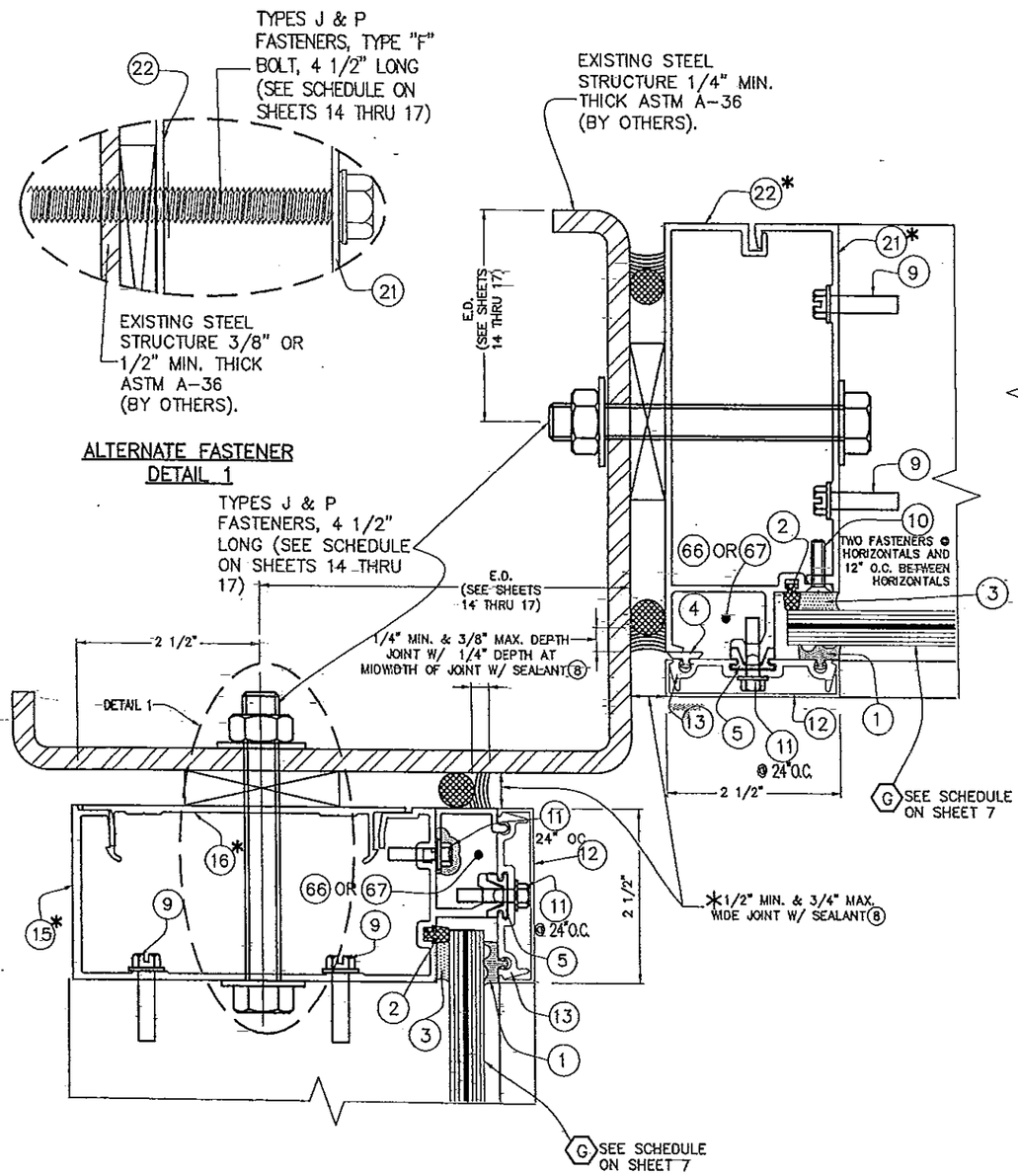

8, 9A @ INSIDE CORNER
JAMB TO EXISTING STEEL (PLAN)

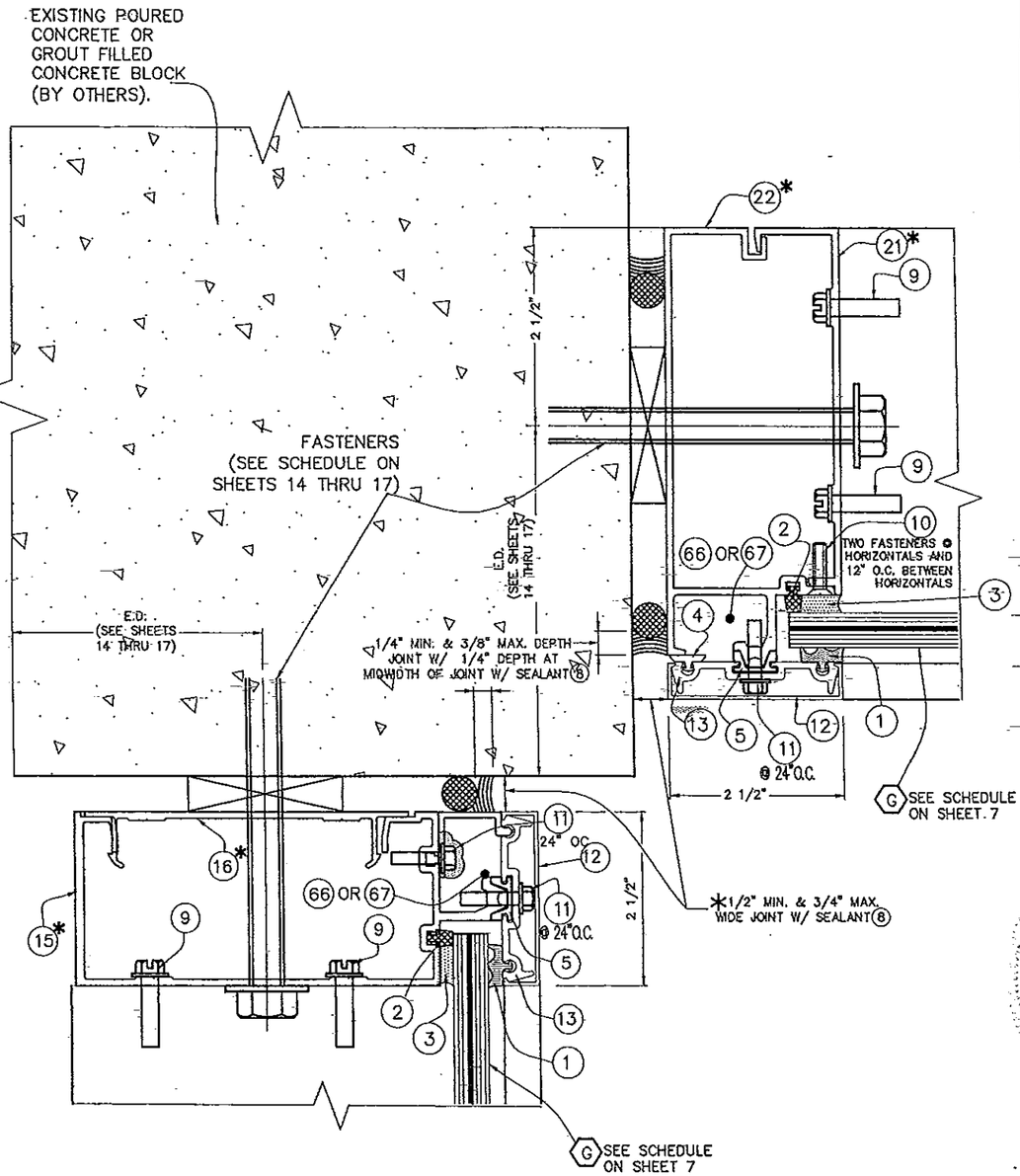

8, 9A @ INSIDE CORNER
JAMB TO POURED CONCRETE (PLAN)

* JAMBS MAY BE (15) + (16) OR (21) + (22) INTERCHANGABLE

* NOTE: ABOVE INDICATED MAXIMUM AND MINIMUM VALUES FOR SPECIFIED SEALANT VERTICAL JOINT WIDTH AT JAMBS CONNECTED TO WALL HAVE BEEN DETERMINED ONLY TAKING INTO CONSIDERATION THE ACTUAL MOVEMENT OF GLASS WALL AT JAMBS DUE TO THERMAL, WIND AND ITS OWN CONSTRUCTION TOLERANCE, AND NOT PERFORMANCE FACTORS FROM THE SURROUNDING STRUCTURE.

FLORIDA BUILDING CODE (High Velocity Hurricane Zone)

HR-250 CAPTURED CURTAIN WALL SYSTEM
LARGE MISSILE IMPACT LAMINATED GLASS

Oldcastle BuildingEnvelope™
803 Airport Rd - Terrell, TX 75160
www.OldcastleBE.com - Phone 800-869-4567

REV. No	DESCRIPTION	DATE
1	OLD 10-103	11/16/11
2	-	-
3	-	-
4	-	-

M.C.V./A.G. DRAWN BY:
11/18/11 DATE
11-124 DRAWING No.
SHEET 24 OF 36

©2011 TILTECO, INC

TILLIT TESTING & ENGINEERING COMPANY
6535 N.W. 36th. St. Ste. 305, VIRGINIA GARDENS, FL. 33166
Phone : (305)871-1530 . Fax : (305)871-1531
e-mail: tilteco@aol.com
EB-0006719
WALTER A. TILLIT Jr. P.E.
FLORIDA Lic. # 44167

WALTER A. TILLIT JR. LICENSE No. 44167 STATE OF FLORIDA PROFESSIONAL ENGINEER

P.E. SEAL/SIGNATURE/DATE

PRODUCT REVISED as complying with the Florida Building Code
Acceptance No. 11-0104.05
Expiration Date 12.5.2016
By Miami Dade Product Control

MIAMI-DADE COUNTY

SILL & HEAD CONNECTION DETAILS FOR SINGLE SPAN & SILL CONNECTION DETAIL FOR TWIN SPAN (PLANS)

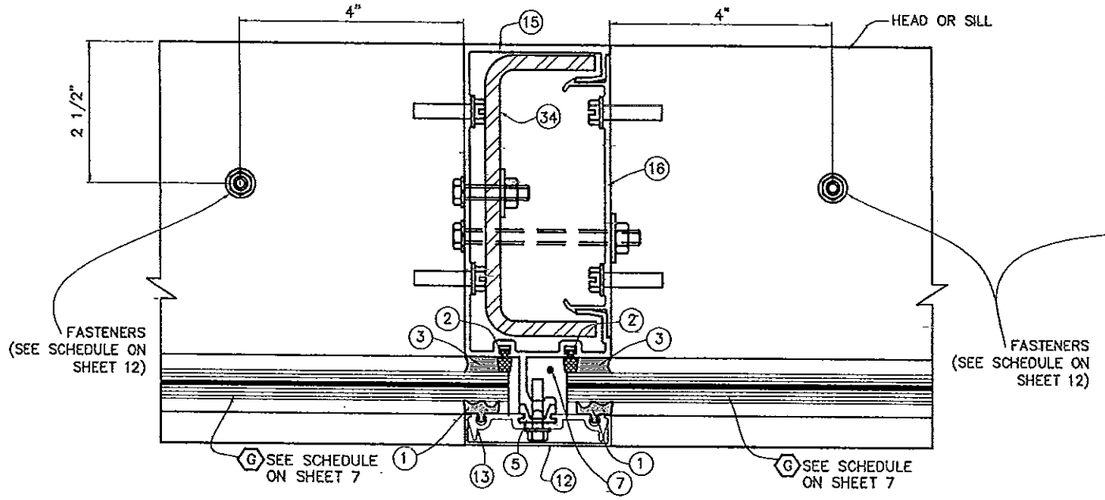

1
CONNECTION AT STANDARD MULLION

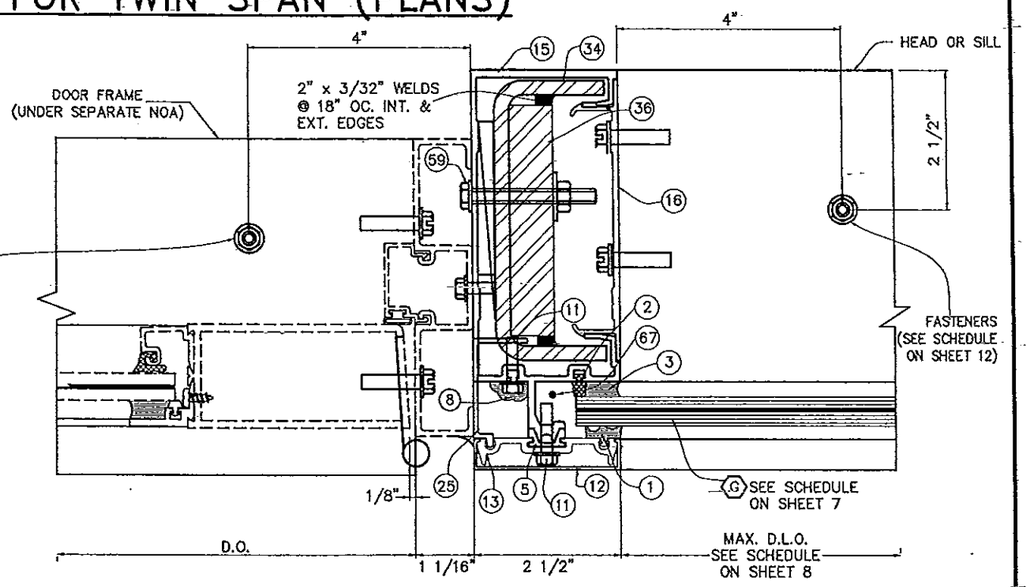

3
CONNECTION AT STANDARD MULLION AT DOOR

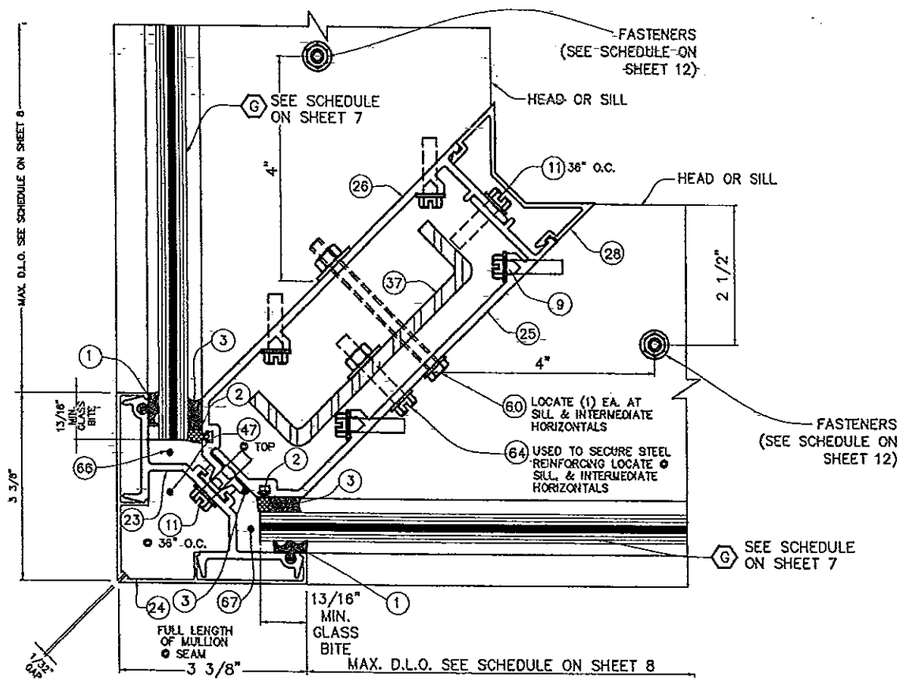

2
CONNECTION AT CORNER MULLION

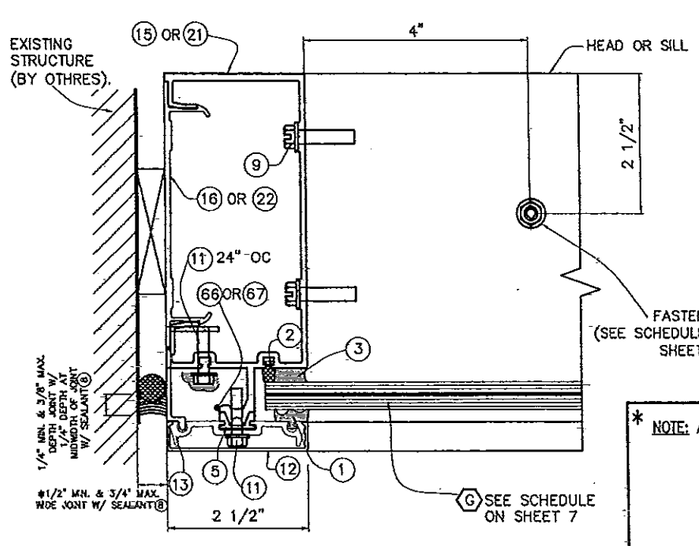

4
CONNECTION AT JAMBS

* NOTE: ABOVE INDICATED MAXIMUM AND MINIMUM VALUES FOR SPECIFIED SEALANT VERTICAL JOINT WIDTH AT JAMBS CONNECTED TO WALL HAVE BEEN DETERMINED ONLY TAKING INTO CONSIDERATION THE ACTUAL MOVEMENT OF GLASS WALL AT JAMBS DUE TO THERMAL, WIND AND ITS OWN CONSTRUCTION TOLERANCE, AND NOT PERFORMANCE FACTORS FROM THE SURROUNDING STRUCTURE.

FLORIDA BUILDING CODE (High Velocity Hurricane Zone)

M.C.V./A.G. DRAWN BY:

11/18/11 DATE

11-124 DRAWING No

SHEET 25 OF 36

HR-250 CAPTURED CURTAIN WALL SYSTEM
LARGE MISSILE IMPACT LAMINATED GLASS

Oldcastle BuildingEnvelope™
803 Airport Rd - Terrell, TX 75160
www.OldcastleBE.com - Phone 800-869-4567

REV. No.	DESCRIPTION	DATE
1	OLD 10-103	11/16/11
2	-	-
3	-	-
4	-	-

©2011 TILTECO, INC

TILTECO INC.
TESTING & ENGINEERING COMPANY
TILLIT TESTING & ENGINEERING COMPANY
6355 N.W. 36th St., Ste. 305, VIRGINIA GARDENS, FL 33166
Phone : (305)871-1530 , Fax : (305)871-1531
e-mail: tiltecc@aol.com
EB-0006719
WALTER A. TILLIT Jr, P.E.
FLORIDA Lic. # 44167

WALTER A. TILLIT JR. LICENSE No. 44167 STATE OF FLORIDA PROFESSIONAL ENGINEER

P.E. SEAL/SIGNATURE/DATE

PRODUCT REVISED
as complying with the Florida
Building Code
Acceptance No 12-0105.05
Expiration Date Oct. 5, 2016
By Miami Dade Product Control

MIAMI-DADE COUNTY

OPTION #1 FOR HEAD CONNECTION OF TWIN SPAN STANDARD MULLIONS WITH (1) (61) TO EXISTING POURED CONCRETE STRUCTURE

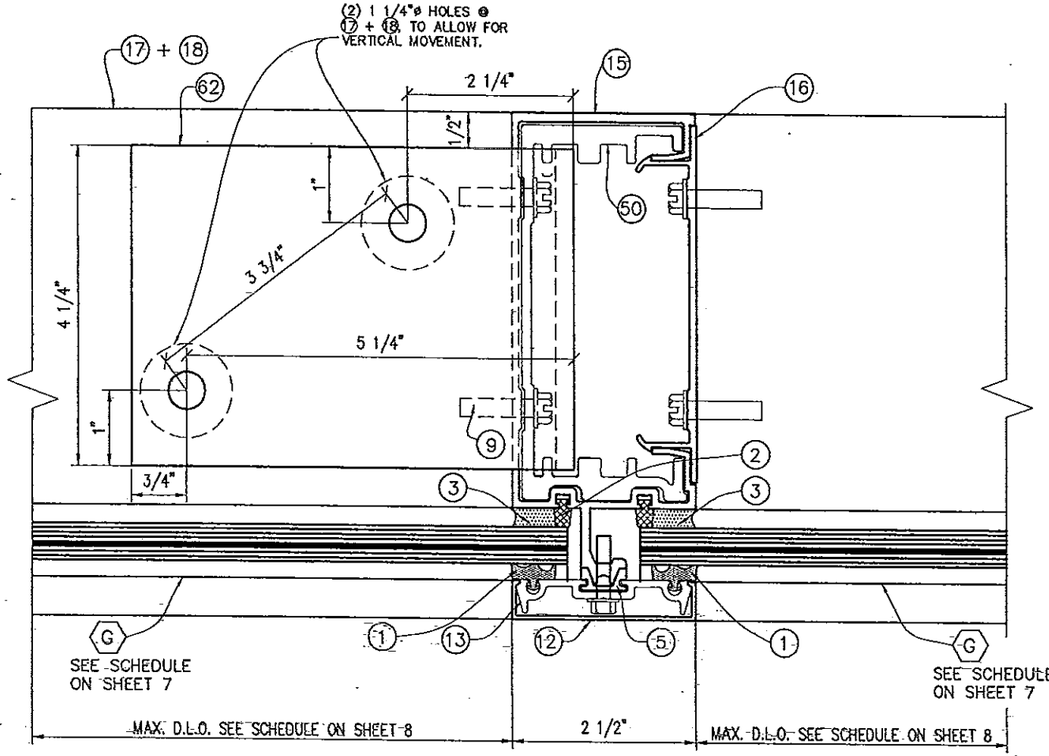

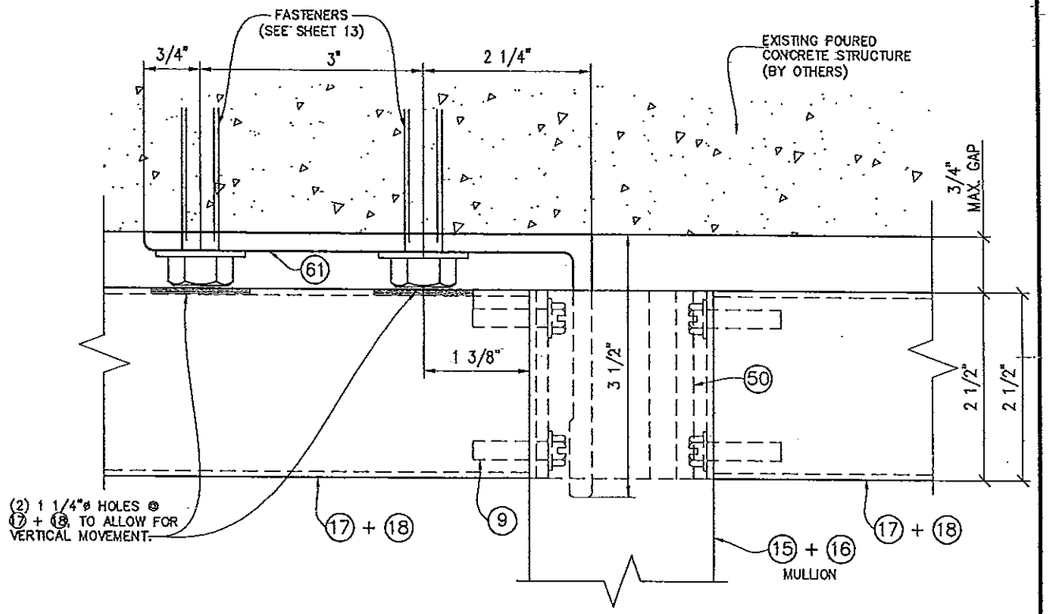

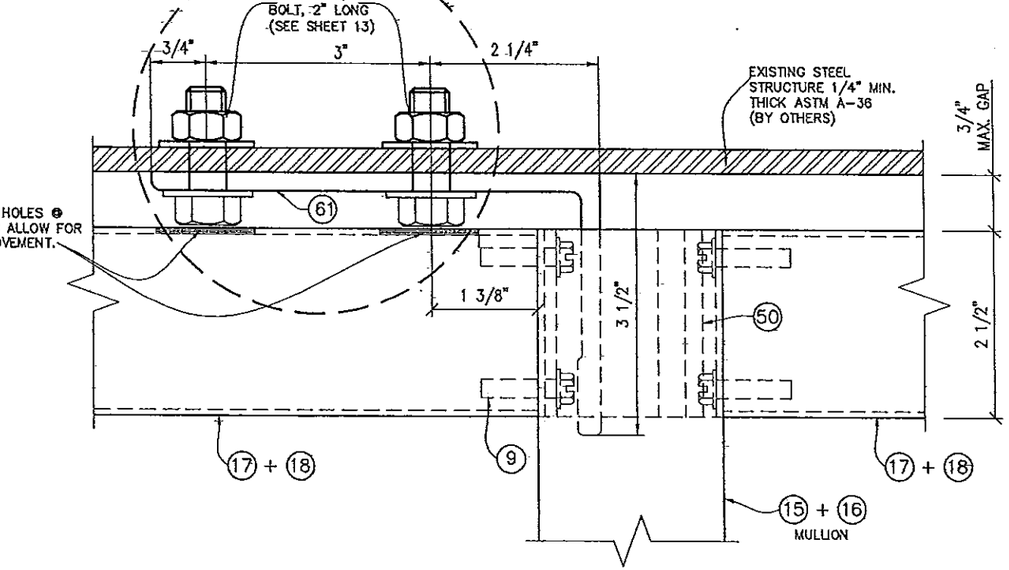

TO EXISTING STEEL STRUCTURE

1

17
HEAD ANCHOR (PLAN)

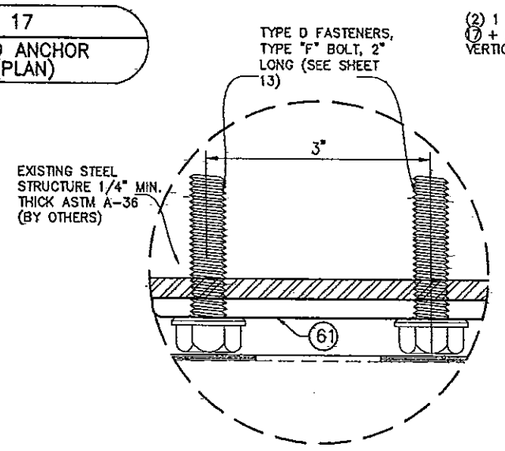

ALTERNATE FASTENER DETAIL 1

EXTERIOR ELEVATIONS 1

FLORIDA BUILDING CODE (High Velocity Hurricane Zone)

HR-250 CAPTURED CURTAIN WALL SYSTEM
LARGE MISSILE IMPACT LAMINATED GLASS

Oldcastle BuildingEnvelope™
803 Airport Rd - Terrell, TX 75160
www.OldcastleBE.com - Phone 800-869-4567

REV. No	DESCRIPTION	DATE
1	OLD 10-105	11/18/11
2	-	-
3	-	-
4	-	-

M.C.V./A.C. DRAWN BY:
11/18/11 DATE
11-124 DRAWING No
SHEET 26 OF 36

©2011 TILTECO, INC

TILLIT TESTING & ENGINEERING COMPANY
8355 N.W. 36th, Sts. 305, VIRGINIA GARDENS, FL. 33166
Phone : (305)871-1550 , Fax : (305)871-1551
e-mail: tiltecp@aol.com
EB-0006719
WALTER A. TILLIT Jr. P.E.
FLORIDA Lic. # 44167

WALTER A. TILLIT JR. LICENSE No. 44167 STATE OF FLORIDA PROFESSIONAL ENGINEER

P.E. SEAL/SIGNATURE/DATE

PRODUCT REVISED as complying with the Florida Building Code
Acceptance No 14-0109.05
Expiration Date 04-13-2016
By Miami Dade Product Control

MIAMI-DADE COUNTY

OPTION #2 FOR HEAD CONNECTION OF TWIN SPAN STANDARD MULLIONS WITH 61 & 61A

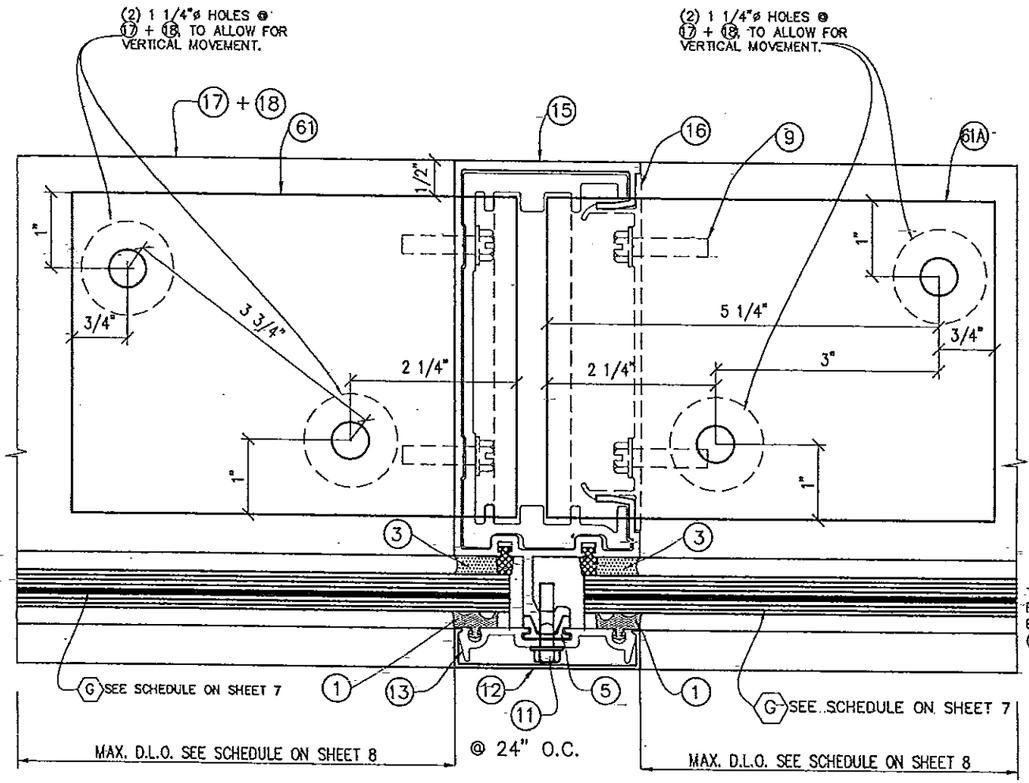

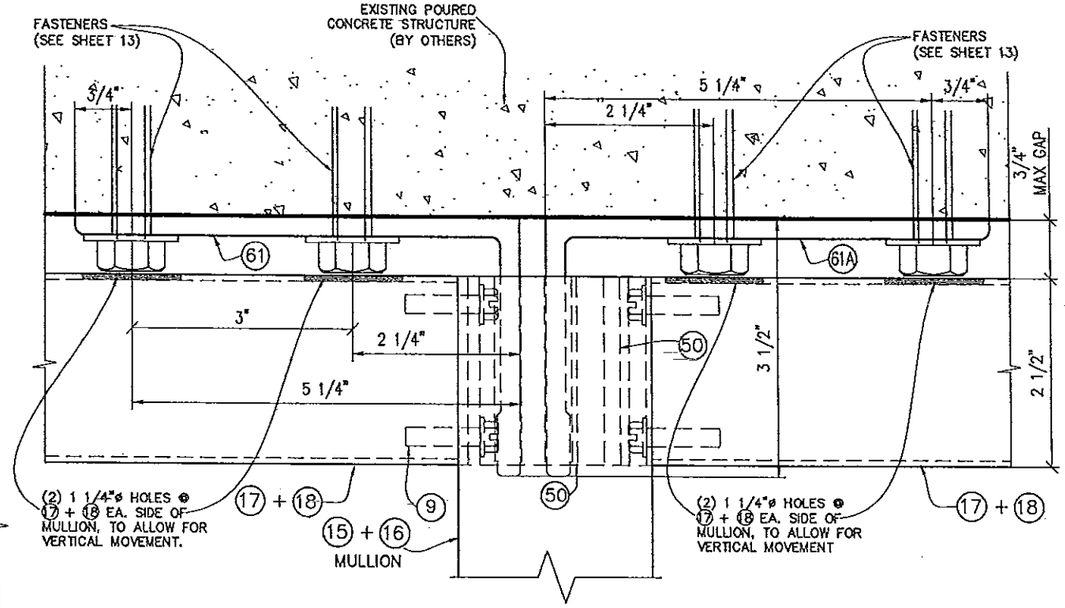

TO EXISTING POURED CONCRETE STRUCTURE

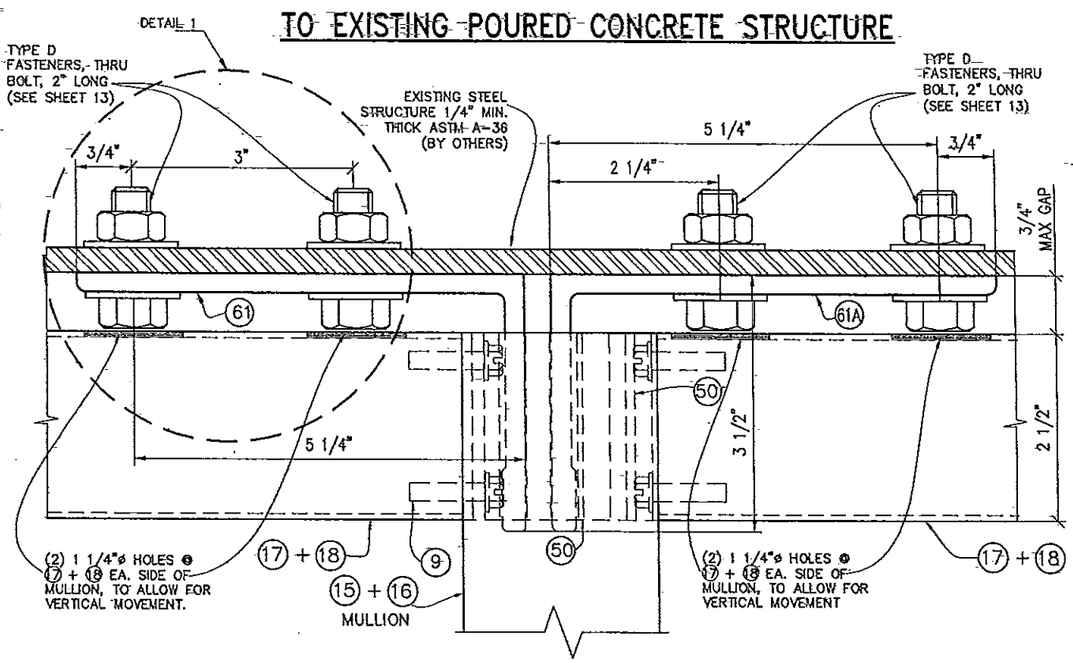

TO EXISTING STEEL STRUCTURE

1

17A
HEAD ANCHOR (PLAN)

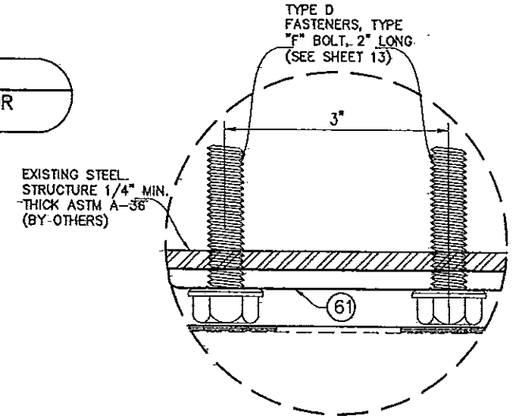

ALTERNATE FASTENER DETAIL 1

EXTERIOR ELEVATIONS 1

FLORIDA BUILDING CODE (High Velocity Hurricane Zone)

HR-250 CAPTURED CURTAIN WALL SYSTEM
LARGE MISSILE IMPACT LAMINATED GLASS

Oldcastle BuildingEnvelope™
803 Airport Rd - Terrell, TX 75160
www.OldcastleBE.com - Phone 800-869-4567

REV. No	DESCRIPTION	DATE	REV. No	DESCRIPTION	DATE
1	OLD 10-103	11/18/11	3	-	-
2	-	-	4	-	-

M.C.V./A.G.
DRAWN BY:
11/18/11
DATE
11-124
DRAWING No
SHEET 27 OF 36

©2011 TILTECO, INC

TILTECO INC.
TILLIT TESTING & ENGINEERING COMPANY
6355 N.W. 36th. St., Ste. 305, VIRGINIA GARDENS, FL 33166
Phone : (305)871-1530 . Fax : (305)871-1531
e-mail: tilteco@aol.com
EB-0006719
WALTER A. TILLIT Jr. P.E.
FLORIDA Lic. # 44167

WALTER A. TILLIT JR. LICENSE No. 44167 STATE OF FLORIDA PROFESSIONAL ENGINEER

P.E. SEAL/SIGNATURE/DATE

PRODUCT REVISED
as complying with the Florida Building Code
Acceptance No 12-0109.05
Expiration Date Oct 5 2016
By Miami Dade Product Control

MIAMI-DADE COUNTY

HEAD CONNECTION OF TWIN SPAN JAMBS

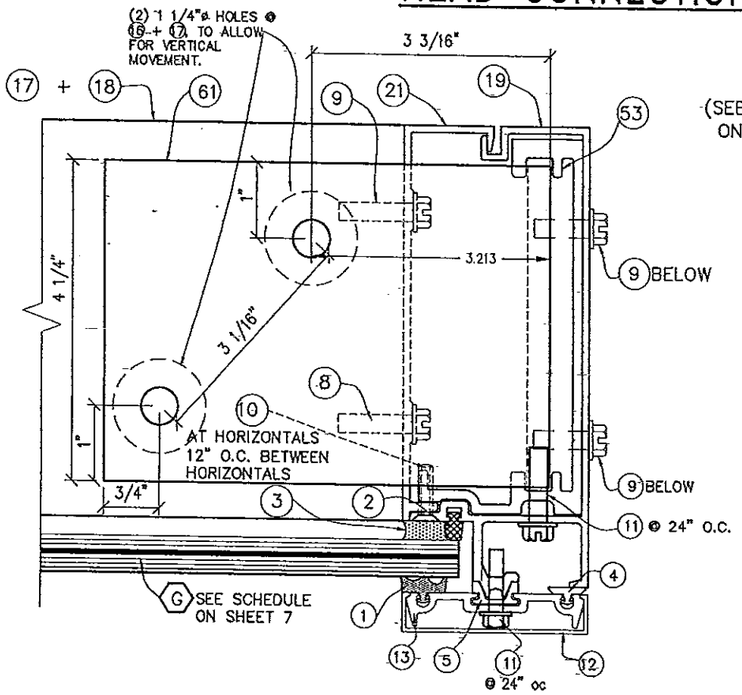

1

18
JAMB HEAD ANCHOR PLAN

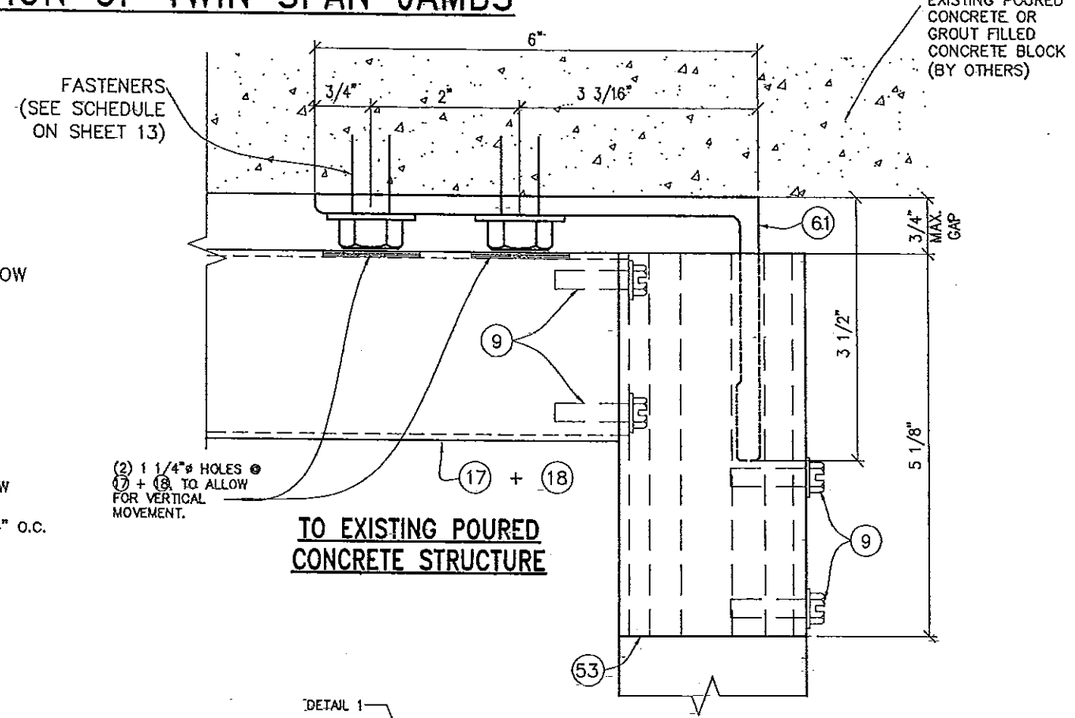

TO EXISTING POURED CONCRETE STRUCTURE

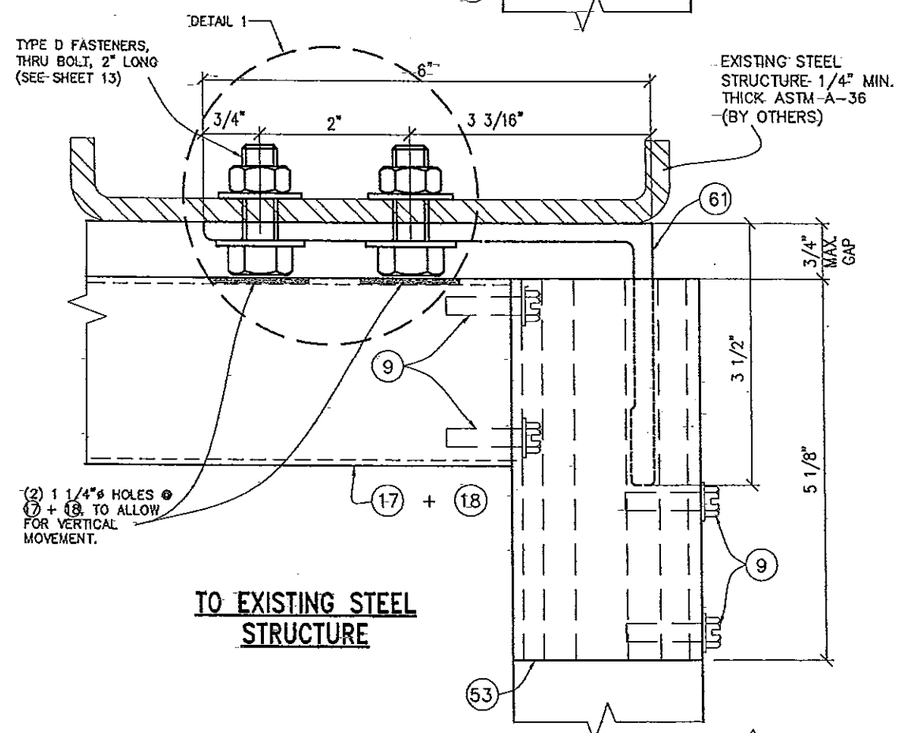

TO EXISTING STEEL STRUCTURE

EXTERIOR ELEVATIONS 1

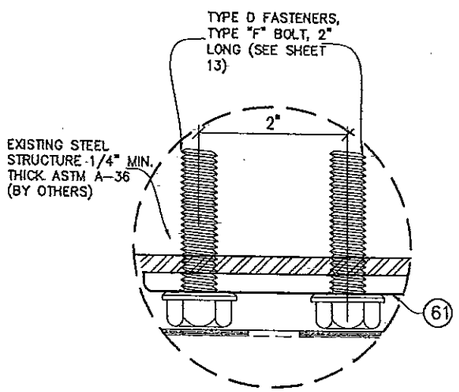

ALTERNATE FASTENER DETAIL 1

FLORIDA BUILDING CODE (High Velocity Hurricane Zone)

©2011 TILTECO, INC

HR-250 CAPTURED CURTAIN WALL SYSTEM
LARGE MISSILE IMPACT LAMINATED GLASS

Oldcastle BuildingEnvelope™
803 Airport Rd - Terrell, TX 75160
www.OldcastleBE.com - Phone 800-869-4567

REV. No	DESCRIPTION	DATE	REV. No	DESCRIPTION	DATE
1	OLD 10-103	11/18/11	3	-	-
2	-	-	4	-	-

M.C.V./A.G.
DRAWN BY:

11/18/11
DATE

11-124
DRAWING No

SHEET 28 OF 36

TILTECO INC.
TILLIT TESTING & ENGINEERING COMPANY
6355 N.W. 36th St., Ste. 305, VIRGINIA GARDENS, FL 33166
Phone : (305)871-1530 . Fax : (305)871-1531
e-mail: tilteco@aol.com
EB-0006719
WALTER A. TILLIT Jr., P.E.
FLORIDA Lic. # 44167

WALTER A. TILLIT JR. LICENSE No. 44167 STATE OF FLORIDA PROFESSIONAL ENGINEER

P.E. SEAL/SIGNATURE/DATE

PRODUCT REVISED
as complying with the Florida Building Code
Acceptance No 12-0109.05
Expiration Date Oct. 5, 2016
By Miami Dade Product Control

MIAMI-DADE COUNTY

HEAD CONNECTION DETAIL FOR TWIN SPAN CORNER MULLION

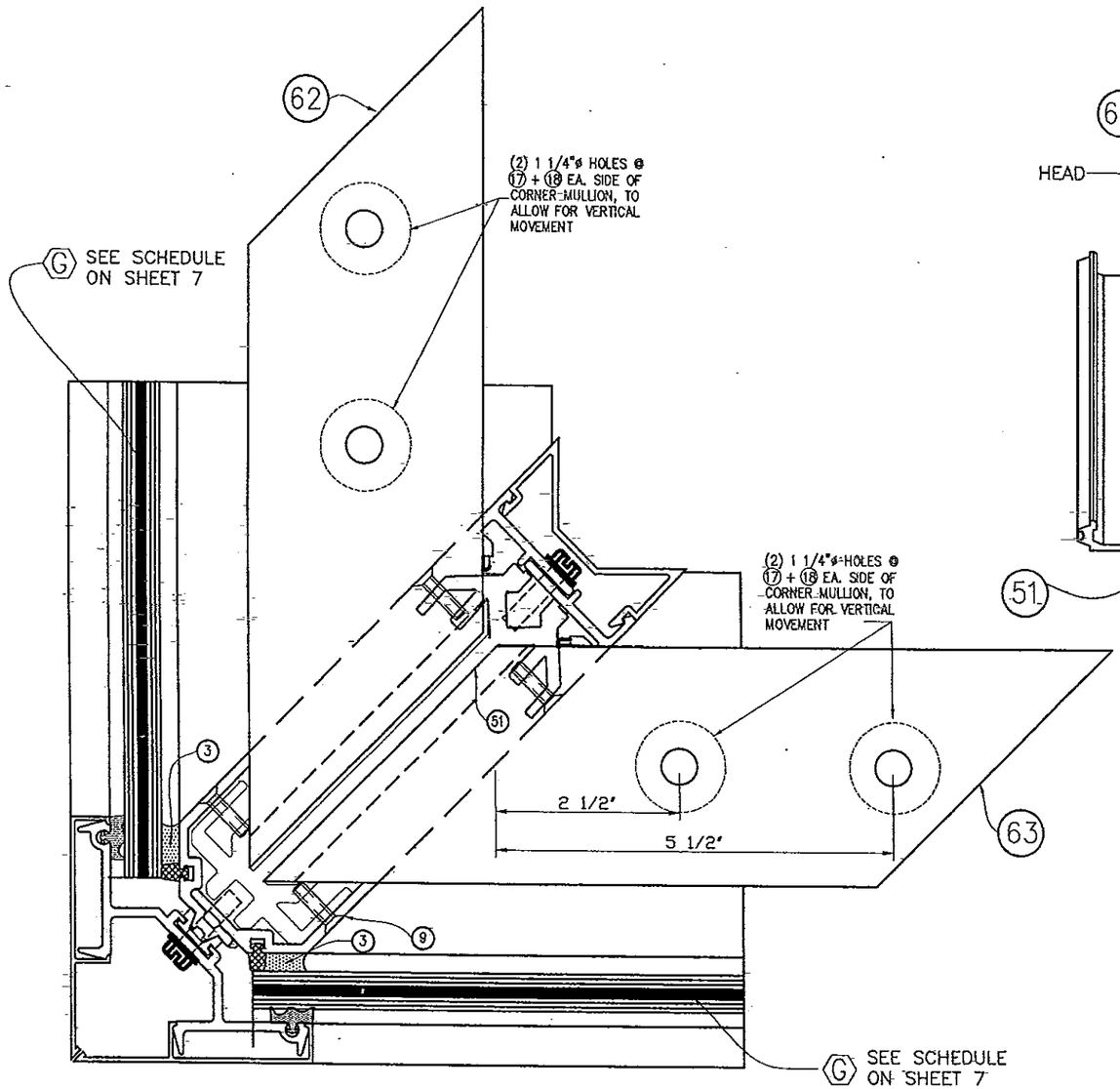

19
CORNER HEAD ANCHOR (PLAN)

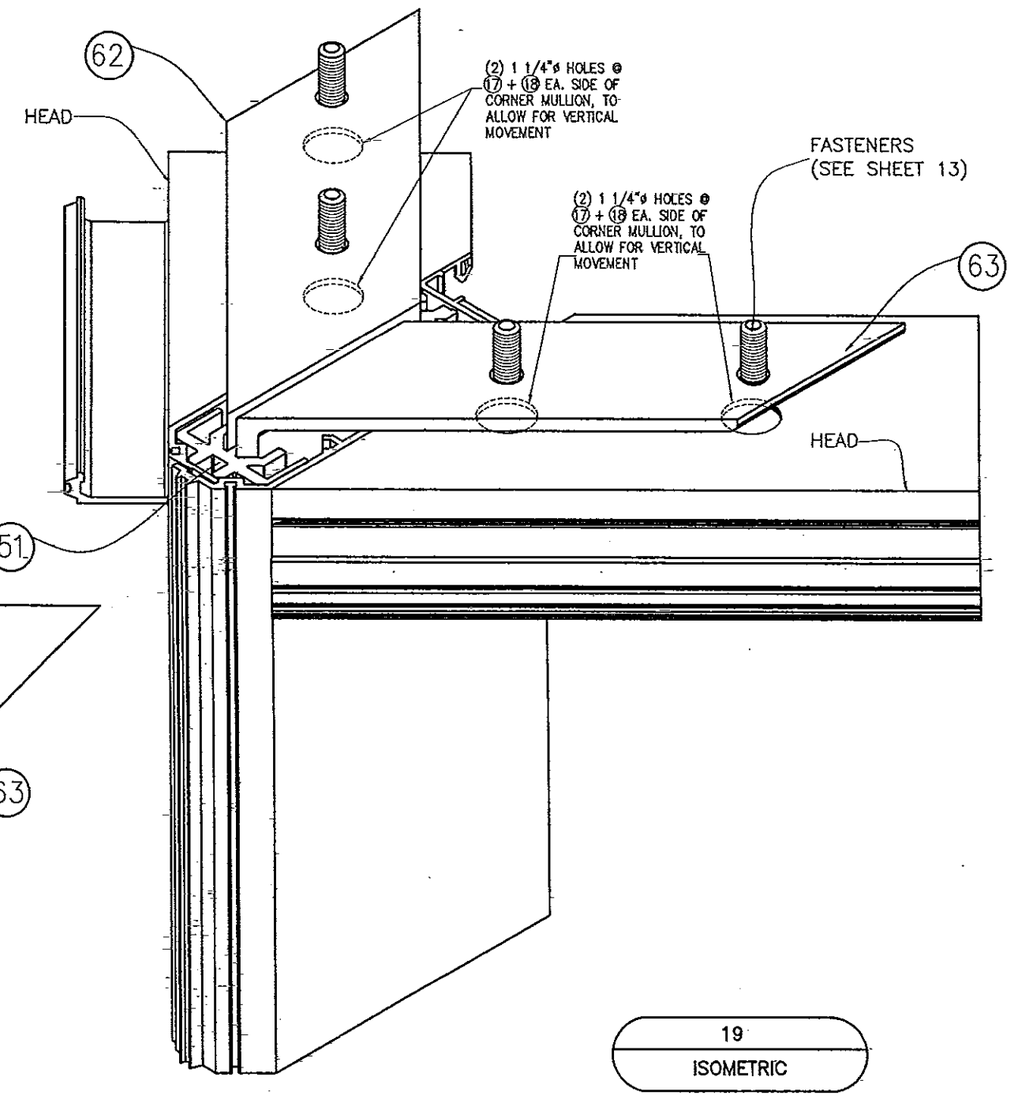

19
ISOMETRIC

FLORIDA BUILDING CODE (High Velocity Hurricane Zone)

HR-250 CAPTURED CURTAIN WALL SYSTEM
LARGE MISSILE IMPACT LAMINATED GLASS

Oldcastle BuildingEnvelope™
803 Airport Rd - Terrell, TX 75160
www.OldcastleBE.com - Phone 800-869-4567

REV. No	DESCRIPTION	DATE	REV. No	DESCRIPTION	DATE
1	OLD 10-103	11/18/11	3	-	-
2	-	-	4	-	-

M.C.V./A.G.
DRAWN BY:

11/18/11
DATE

11-124
DRAWING No

SHEET 29 OF 36

©2011 TILTECO, INC

TILTECO INC.
TILLIT TESTING & ENGINEERING COMPANY
6355 N.W. 36th. St., Ste. 305, VIRGINIA GARDENS, FL 33166
Phone : (305)871-1530 . Fax : (305)871-1531
e-mail: tilteco@aol.com
EB-0006719
WALTER A. TILLIT Jr. P.E.
FLORIDA Lic. # 44167

WALTER A. TILLIT JR. LICENSE No. 44167 STATE OF FLORIDA PROFESSIONAL ENGINEER

P.E. SEAL/SIGNATURE/DATE

PRODUCT REVISED
as complying with the Florida Building Code
Acceptance No 12-0109.05
Expiration Date 04.5.2016
By Miami Dade Product Control

MIAMI-DADE COUNTY

MULLION AND JAMB SPLICES AT TWIN SPAN ONLY (PLAN)

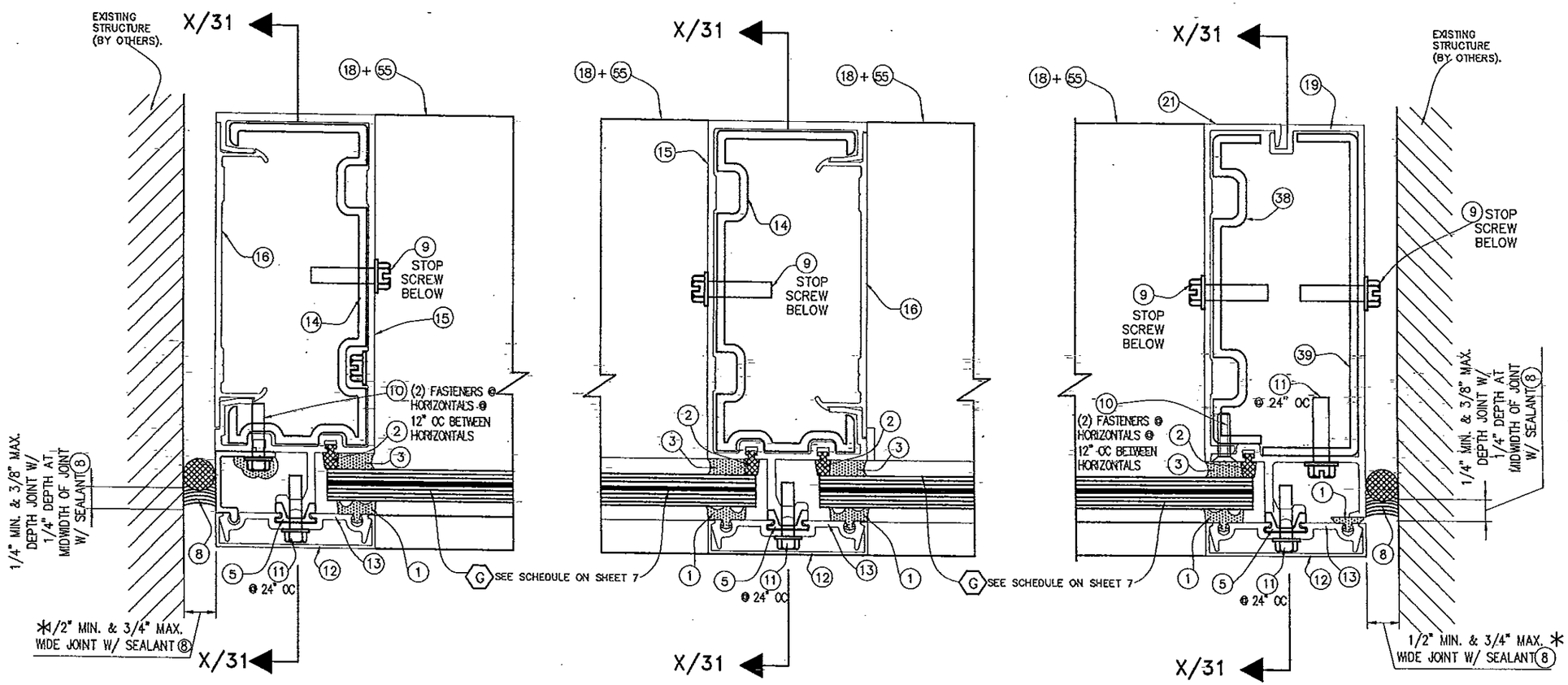

15A
SPLICE JOINT @ STANDARD JAMB W/ 14

15B
SPLICE JOINT @ STANDARD MULLION W/ 14

15C
SPLICE JOINT @ 2 PART JAMB W/ 38+39

* NOTE: ABOVE INDICATED MAXIMUM AND MINIMUM VALUES FOR SPECIFIED SEALANT VERTICAL JOINT WIDTH AT JAMBS CONNECTED TO WALL HAVE BEEN DETERMINED ONLY TAKING INTO CONSIDERATION THE ACTUAL MOVEMENT OF GLASS WALL AT JAMBS DUE TO THERMAL, WIND AND ITS OWN CONSTRUCTION TOLERANCE, AND NOT PERFORMANCE FACTORS FROM THE SURROUNDING STRUCTURE.

FLORIDA BUILDING CODE (High Velocity Hurricane Zone)

©2011 TILTECO, INC

TILLIT TESTING & ENGINEERING COMPANY
6335 N.W. 36th St., Ste. 305, VIRGINA GARDENS, FL. 33166
Phone : (305)871-1530 Fax : (305)871-1531
e-mail: tilteco@aol.com
ER-0006719
WALTER A. TILLIT Jr. P.E.
FLORIDA Lic. # 44167

HR-250 CAPTURED CURTAIN WALL SYSTEM
LARGE MISSILE IMPACT LAMINATED GLASS

Oldcastle BuildingEnvelope™
803 Airport Rd ; Terrell, TX 75160
www.OldcastleBE.com - Phone 800-869-4567

REV. No	DESCRIPTION	DATE
1	OLD 10-103	11/18/11
2	-	-
3	-	-
4	-	-

M.C.V./A.G. DRAWN BY:

11/18/11 DATE

11-124 DRAWING No

SHEET 30 OF 36

WALTER A. TILLIT JR. LICENSE No. 44167 STATE OF FLORIDA PROFESSIONAL ENGINEER

P.E. SEAL/SIGNATURE/DATE

PRODUCT REVISED
as complying with the Florida
Building Code
Acceptance No 12-0104.05
Expiration Date 06-15-2016
By
Miami Dade Product Control

MIAMI-DADE COUNTY

MULLION AND JAMB SPLICES AT TWIN SPAN ONLY (SIDE VIEW)

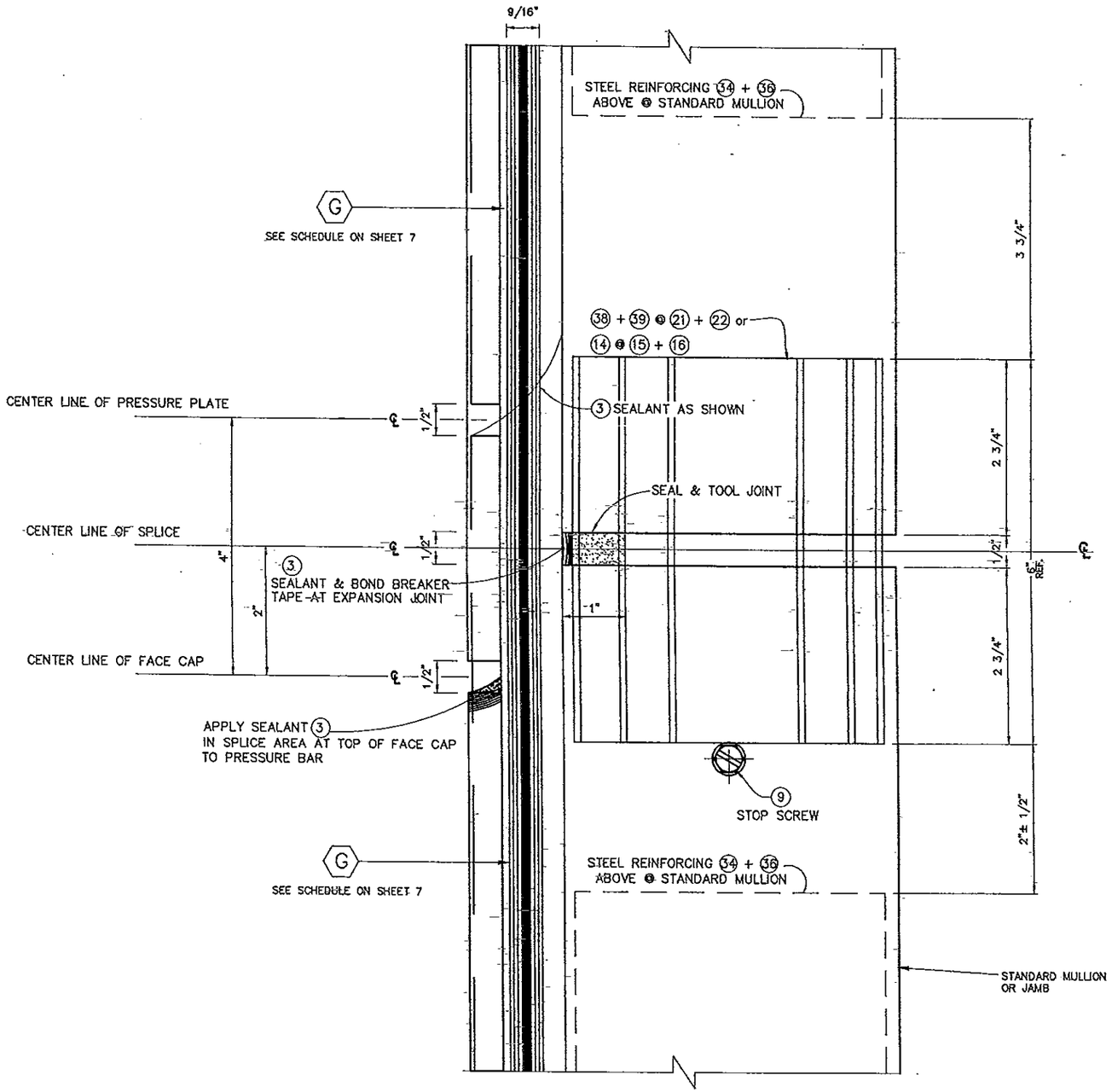

SECTION X–X
SPLICE JOINT @ STD MULLION/JAMB

FLORIDA BUILDING CODE (High Velocity Hurricane Zone)

©2011 TILTECO, INC

TILTECO INC.
TILLIT TESTING & ENGINEERING COMPANY
6355 N.W. 36th. St. Ste. 305, VIRGINIA GARDENS, FL 33166
Phone : (305)871-1530 , Fax : (305)871-1531
e-mail; tilteco@aol.com
EB-0006719
WALTER A. TILLIT Jr. P.E.
FLORIDA Lic. # 44167

HR-250 CAPTURED CURTAIN WALL SYSTEM
LARGE MISSILE IMPACT LAMINATED GLASS

Oldcastle BuildingEnvelope™
803 Airport Rd - Terrell, TX 75160
www.OldcastleBE.com - Phone 800-869-4567

REV. No	DESCRIPTION	DATE
1	OLD 10-103	11/18/11
2	-	-
3	-	-
4	-	-

M.C.V./A.G. DRAWN BY:
11/18/11 DATE
11-124 DRAWING No
SHEET 31 OF 36

WALTER A. TILLIT JR. LICENSE No. 44167 STATE OF FLORIDA PROFESSIONAL ENGINEER
P.E. SEAL/SIGNATURE/DATE

PRODUCT REVISED
as complying with the Florida
Building Code
Acceptance No 12-0104.06
Expiration Date 04-5-2016
By
Miami Dade Product Control

MIAMI-DADE COUNTY

CORNER MULLION SPLICE AT TWIN SPAN (PLAN)

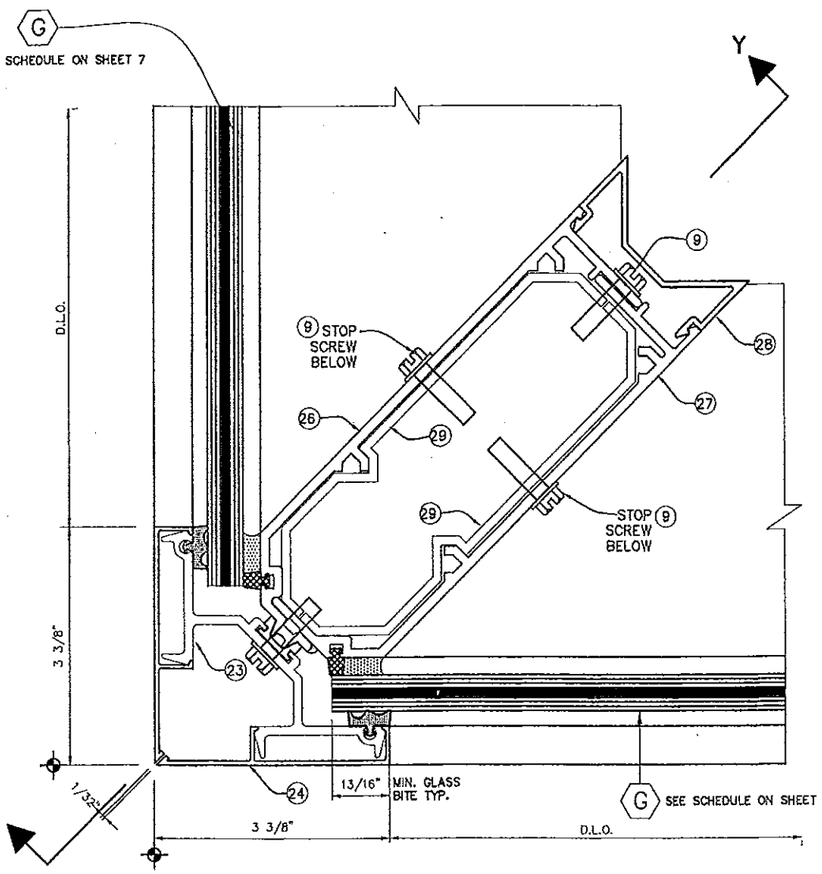

16
SPLICE JOINT @
90 DEG. CORNER
PLAN

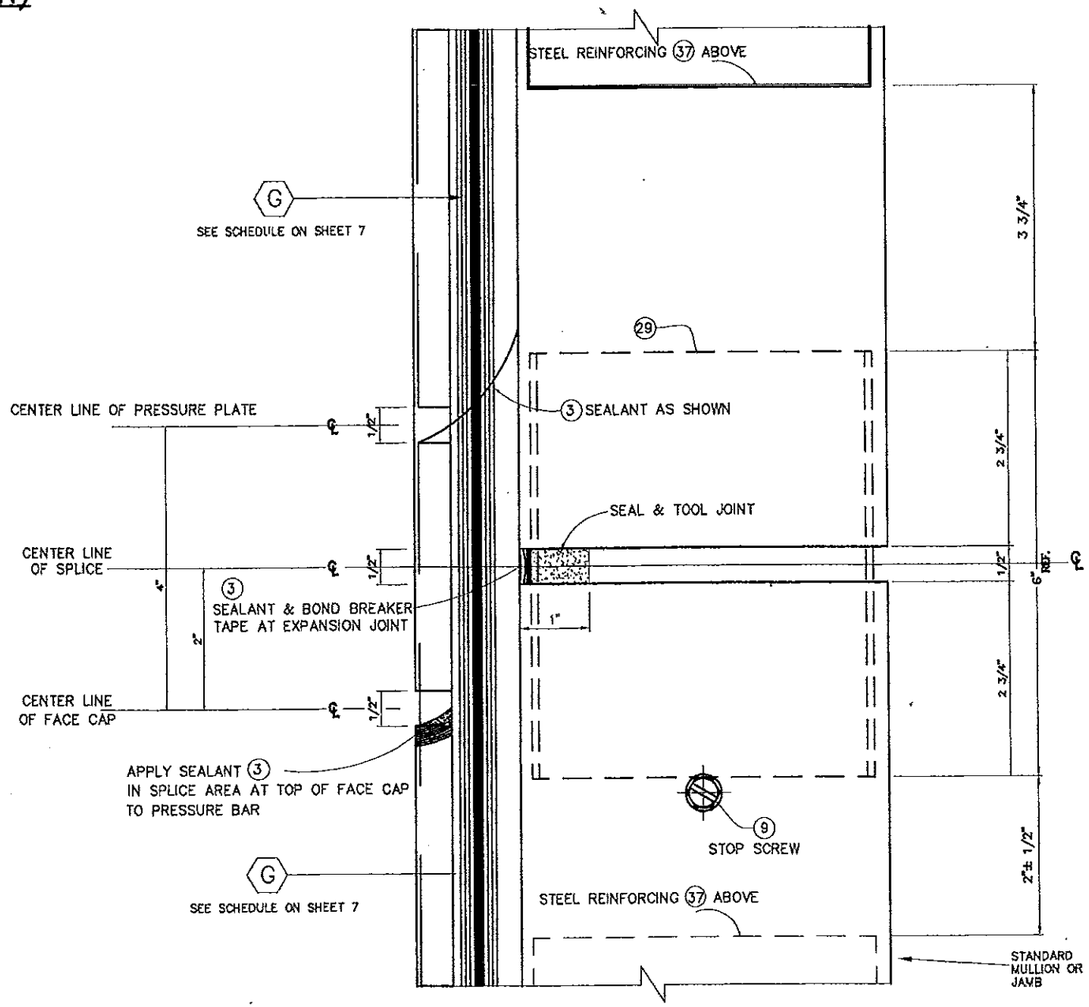

16
SPLICE JOINT @
90 DEG. CORNER
SECTION Y-Y

FLORIDA BUILDING CODE (High Velocity Hurricane Zone)

HR-250 CAPTURED CURTAIN WALL SYSTEM
LARGE MISSILE IMPACT LAMINATED GLASS

DRAWN BY: M.C.V./A.G.
DATE 11/18/11
DRAWING No 11-124
SHEET 32 OF 36

REV. No	DESCRIPTION	DATE
1	GD 10-165	11/18/11
2	-	-
3	-	-
4	-	-

Oldcastle BuildingEnvelope™
803 Airport Rd - Terrell, TX 75160
www.OldcastleBE.com - Phone 800-869-4567

©2011 TILTECO, INC

TILLIT TESTING & ENGINEERING COMPANY
6355 N.W. 36th. St., Ste. 305, VIRGINIA GARDENS, FL. 33166
Phone : (305)871-1530 . Fax : (305)871-1531
e-mail: tilteco@aol.com
EB-0006719
WALTER A. TILLIT Jr. P.E.
FLORIDA Lic. # 44167

WALTER A. TILLIT JR. LICENSE NO 44167 STATE OF FLORIDA PROFESSIONAL ENGINEER
P.E. SEAL/SIGNATURE/DATE

PRODUCT REVISED
as complying with the Florida
Building Code
Acceptance No 12-0101.05
Expiration Date Oct 5 2016
By Miami Dade Product Control

MIAMI-DADE COUNTY

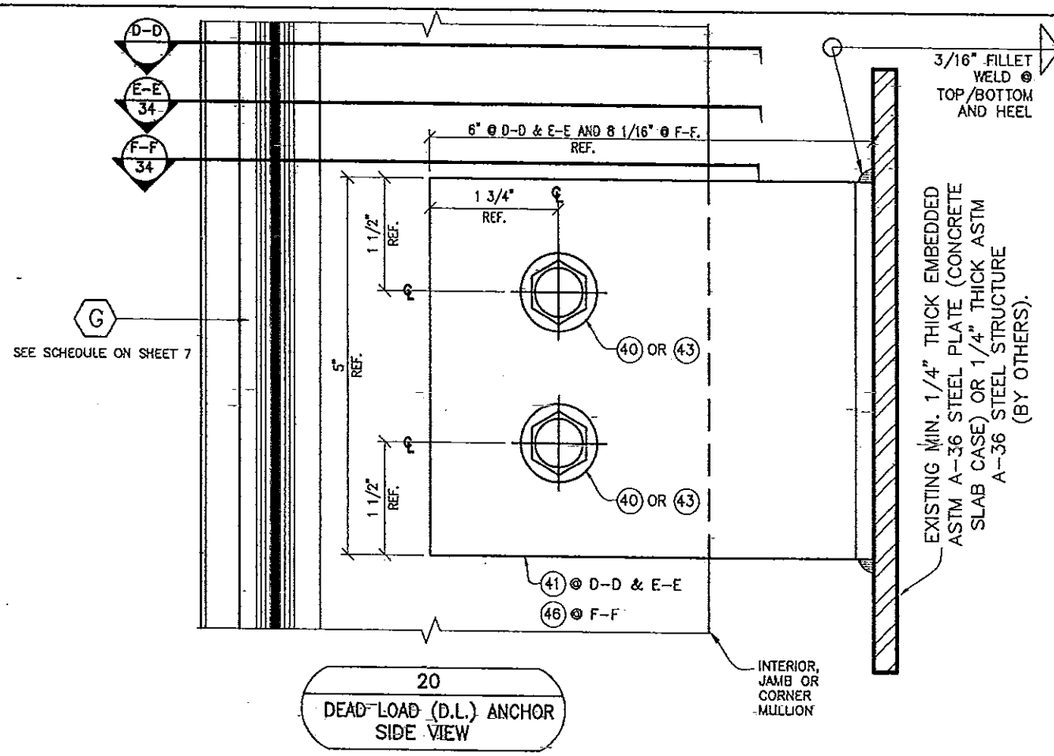

20
DEAD LOAD (D.L.) ANCHOR SIDE VIEW

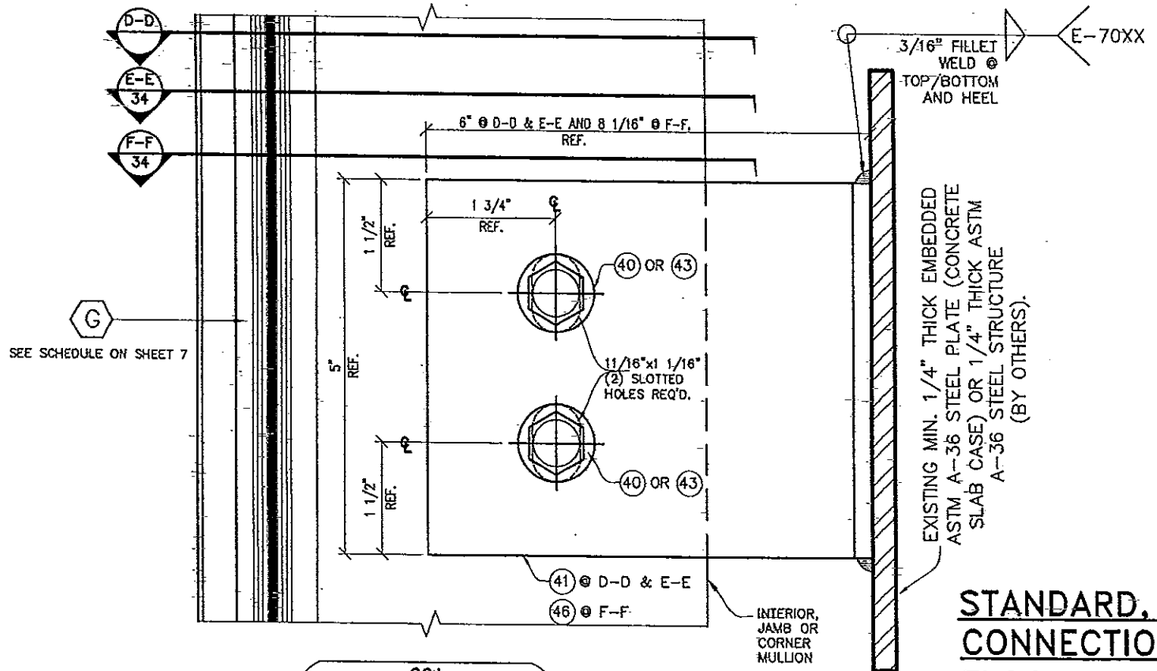

20A
WIND LOAD (W.L.) ANCHOR SIDE VIEW

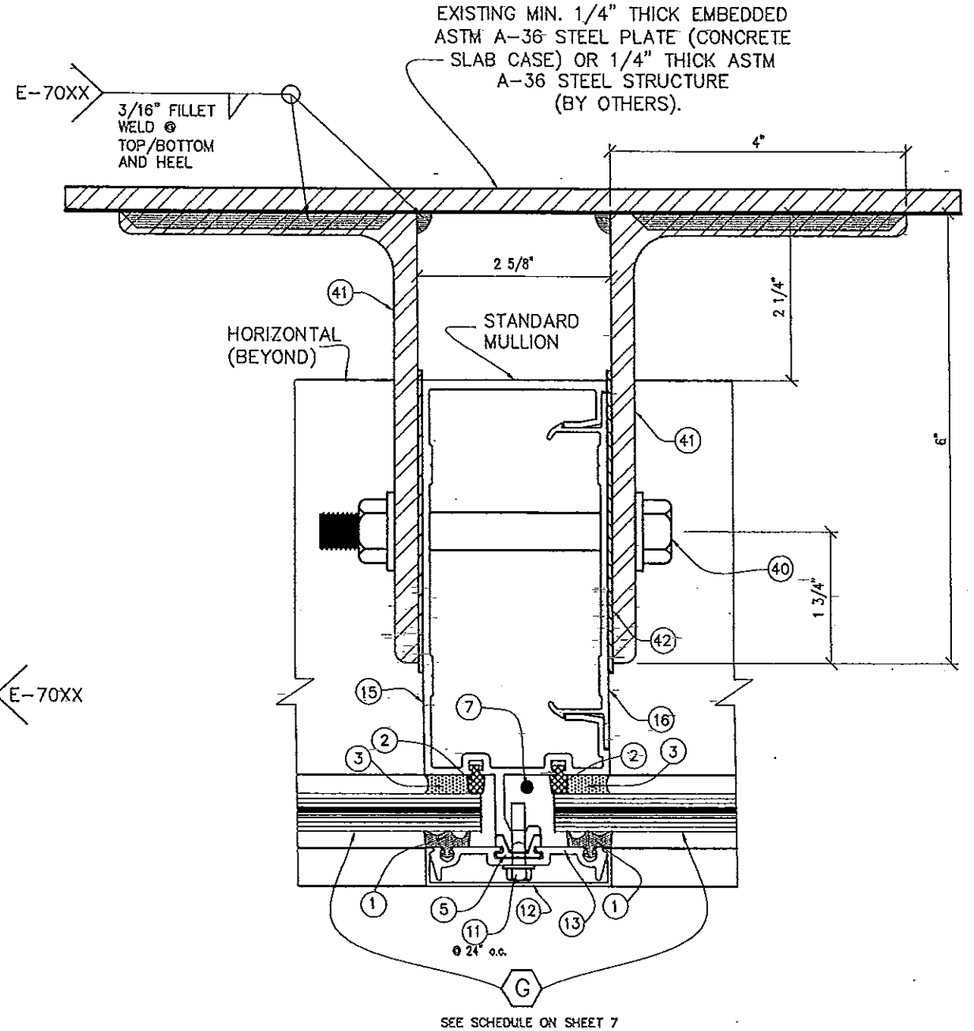

SECTION "D-D" @ STANDARD MULLION

STANDARD, JAMB AND CORNER MULLION CONNECTION TO EXISTING INTERMEDIATE FLOOR STRUCTURE W/ DEAD AND WIND LOAD ANCHORS

FLORIDA BUILDING CODE (High Velocity Hurricane Zone)

©2011 TILTECO, INC

HR-250 CAPTURED CURTAIN WALL SYSTEM
LARGE MISSILE IMPACT LAMINATED GLASS

Oldcastle BuildingEnvelope™
803 Airport Rd - Terrell, TX 75160
www.OldcastleBE.com - Phone 800-869-4567

REV. No	DESCRIPTION	DATE
1	OLD 10-103	11/18/11
2	-	-
3	-	-
4	-	-

M.C.V./A.G. DRAWN BY:
11/18/11 DATE
11-124 DRAWING No
SHEET 33 OF 36

TILTECO, INC
TILLIT TESTING & ENGINEERING COMPANY
6355 N.W. 36th. St., Ste. 305, VIRGINIA GARDENS, FL 33166
Phone : (305)871-1530 . Fax : (305)871-1531
e-mail: tilteco@aol.com
EB-0006719
WALTER A. TILLIT Jr. P.E.
FLORIDA Lic. # 44167

WALTER A. TILLIT JR. LICENSE 44167 STATE OF FLORIDA PROFESSIONAL ENGINEER
P.E. SEAL/SIGNATURE/DATE

PRODUCT REVISED
as complying with the Florida
Building Code
Acceptance No 12-0106.05
Expiration Date Oct 5, 2016
By
Miami Dade Product Control

MIAMI-DADE COUNTY

JAMB CONNECTION TO EXISTING INTERMEDIATE FLOOR STRUCTURE W/ DEAD OR WIND LOAD ANCHOR (PLAN)

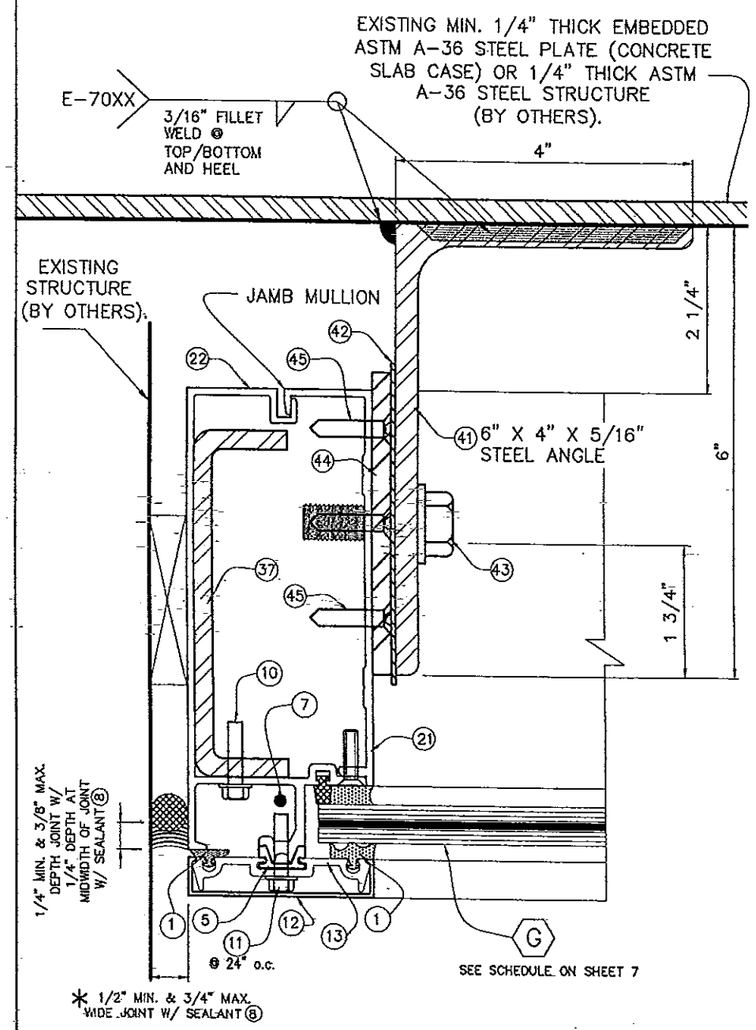

SECTION "E-E" @ JAMB

* NOTE: ABOVE INDICATED MAXIMUM AND MINIMUM VALUES FOR SPECIFIED SEALANT VERTICAL JOINT WIDTH AT JAMBS CONNECTED TO WALL HAVE BEEN DETERMINED ONLY TAKING INTO CONSIDERATION THE ACTUAL MOVEMENT OF GLASS WALL AT JAMBS DUE TO THERMAL, WIND AND ITS OWN CONSTRUCTION TOLERANCE, AND NOT PERFORMANCE FACTORS FROM THE SURROUNDING STRUCTURE.

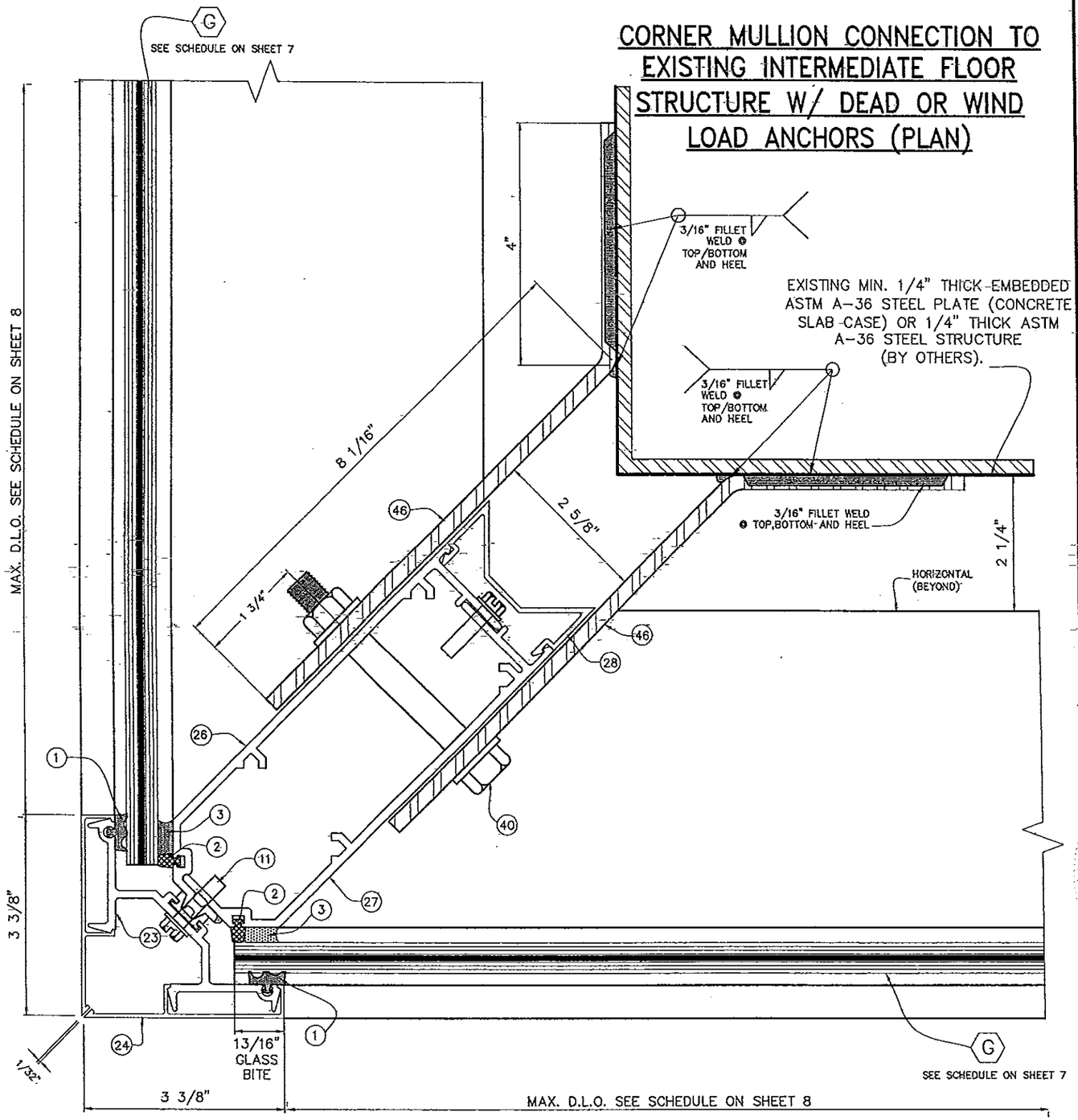

SECTION "F-F" @ CORNER MULLION

CORNER MULLION CONNECTION TO EXISTING INTERMEDIATE FLOOR STRUCTURE W/ DEAD OR WIND LOAD ANCHORS (PLAN)

FLORIDA BUILDING CODE (High Velocity Hurricane Zone)

HR-250 CAPTURED CURTAIN WALL SYSTEM
LARGE MISSILE IMPACT LAMINATED GLASS

Oldcastle BuildingEnvelope™
803 Airport Rd - Temell, TX 75160
www.OldcastleBE.com - Phone 800-869-4567

REV. No	DESCRIPTION	DATE
1	OLD 10-103	11/18/11
2	-	-

REV. No	DESCRIPTION	DATE
3	-	-
4	-	-

M.C.V./A.G. DRAWN BY:
11/18/11 DATE
11-124 DRAWING No
SHEET 34 OF 36

©2011 TILTECO, INC

TILTECO INC.
TILLIT TESTING & ENGINEERING COMPANY
6355 N.W. 36th. St., Ste. 305, VIRGINIA GARDENS, FL. 33166
Phone : (305)871-1530 , Fax : (305)871-1531
e-mail: tilteco@aol.com
EB-0006719
WALTER A. TILLIT Jr. P.E.
FLORIDA Lic. # 44167

WALTER A. TILLIT JR. LICENSE No. 44167 STATE OF FLORIDA PROFESSIONAL ENGINEER
11/18/11
P.E. SEAL/SIGNATURE/DATE

PRODUCT REVISED
as complying with the Florida
Building Code
Acceptance No 12-0104.05
Expiration Date 12-5-16
By
Miami Dade Product Control

MIAMI-DADE COUNTY

DOOR HEADER CONNECTION TO CURTAIN WALL HORIZONTALS

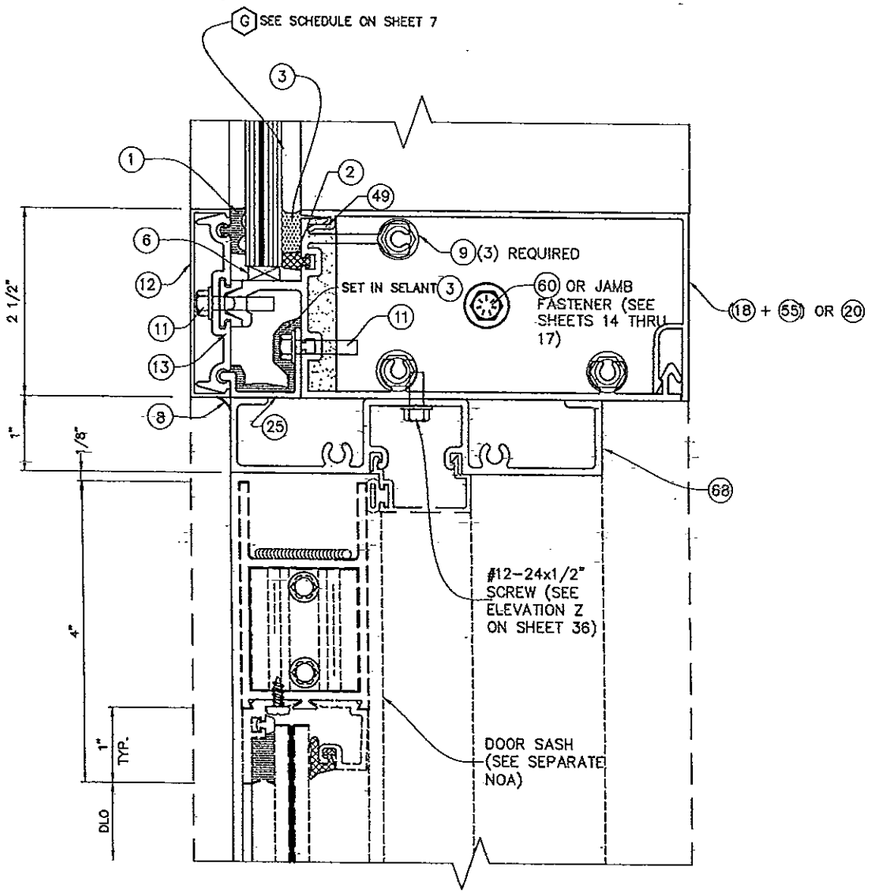

10
DR HEADER

DOOR SILL CONNECTION TO POURED CONCRETE STRUCTURE AND TO ADJACENT CURTAIN WALL MULLION "D" (SEE SHEET 9 FOR DEFINITION OF "D")

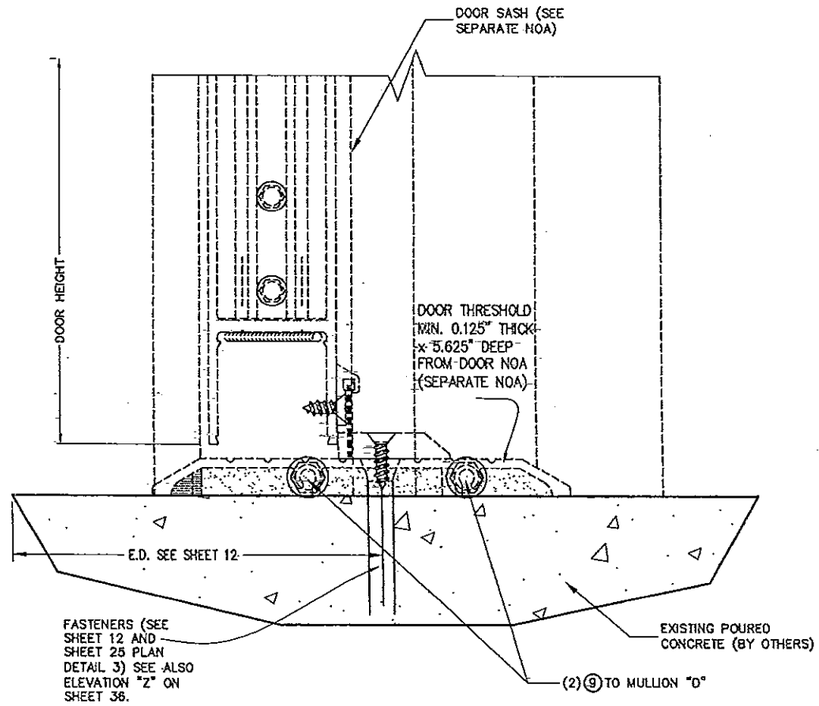

13
DOOR BM RAIL-

FLORIDA BUILDING CODE (High Velocity Hurricane Zone)

©2011 TILTECO, INC.

TILLIT TESTING & ENGINEERING COMPANY
6355 N.W. 36th St., Ste. 305, VIRGINIA GARDENS, FL. 33166
Phone : (305)871-1530 . Fax : (305)871-1531
e-mail: tilteco@aol.com
EB-0006719
WALTER A. TILLIT Jr. P.E.
FLORIDA Lic. # 44167

HR-250 CAPTURED CURTAIN WALL SYSTEM
LARGE MISSILE IMPACT LAMINATED GLASS

Oldcastle BuildingEnvelope™
803 Airport Rd - Terrell, TX 75160
www.OldcastleBE.com - Phone 800-869-4567

REV. No	DESCRIPTION	DATE
1	OLD 10-103	11/18/11
2	-	-
3	-	-
4	-	-

M.C.V./A.G. DRAWN BY:
11/18/11 DATE
11-124 DRAWING No
SHEET 35 OF 36

WALTER A. TILLIT LICENSE No. 44167 STATE OF FLORIDA PROFESSIONAL ENGINEER
P.E. SEAL/SIGNATURE/DATE

PRODUCT REVISED
as complying with the Florida
Building Code
Acceptance No 12-0104.05
Expiration Date Oct 5, 2016
By Miami Dade Product Control

MIAMI-DADE COUNTY

DOOR JAMBS CONNECTION TO CURTAIN WALL

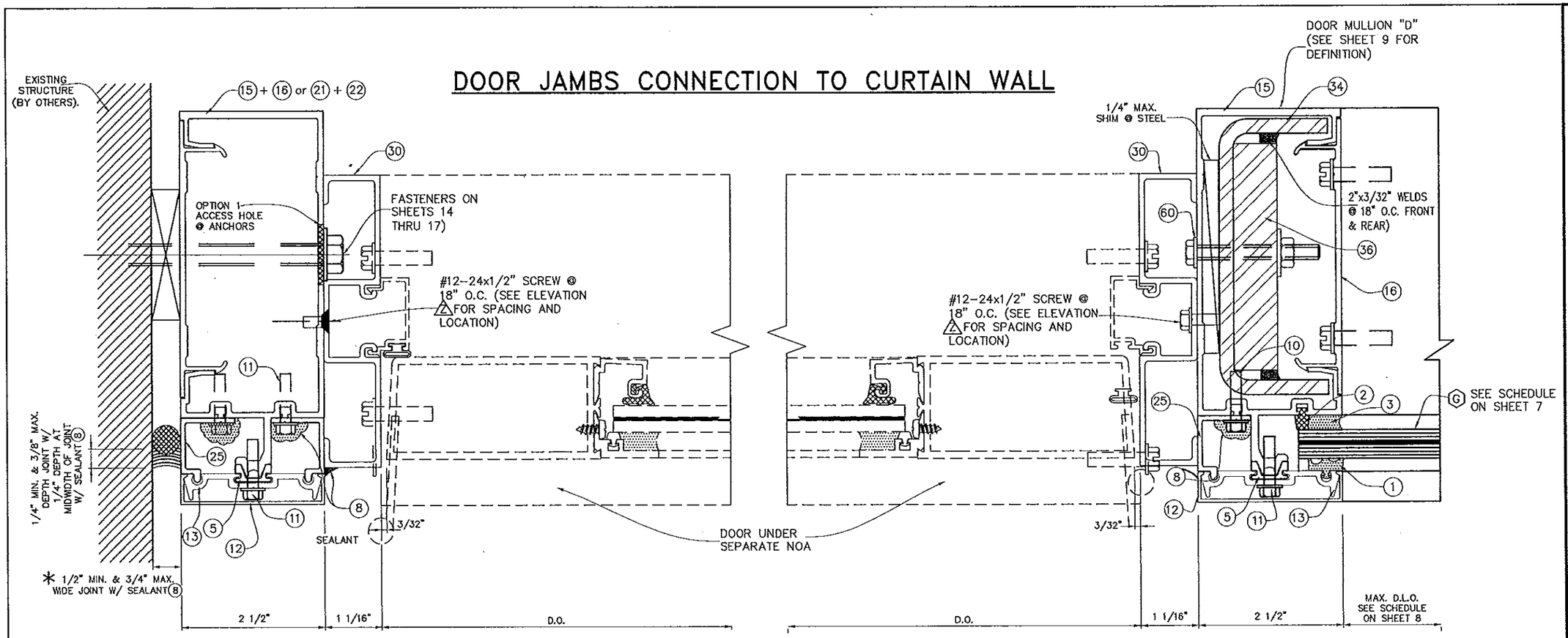

6
DOOR JAMB TO CURTAIN WALL JAMB

7
DOOR JAMB TO CURTAIN WALL DOOR MULLION

* NOTE: ABOVE INDICATED MAXIMUM AND MINIMUM VALUES FOR SPECIFIED SEALANT VERTICAL JOINT WIDTH AT JAMBS CONNECTED TO WALL HAVE BEEN DETERMINED ONLY TAKING INTO CONSIDERATION THE ACTUAL MOVEMENT OF GLASS WALL AT JAMBS DUE TO THERMAL, WIND AND ITS OWN CONSTRUCTION TOLERANCE, AND NOT PERFORMANCE FACTORS FROM THE SURROUNDING STRUCTURE.

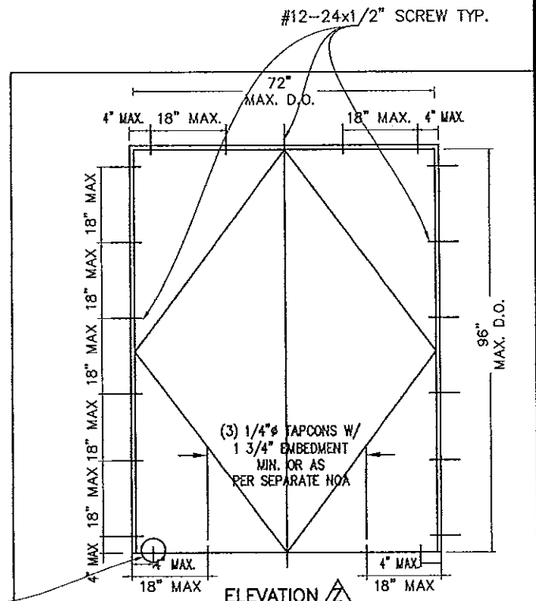

ELEVATION 2
LOCATIONS FOR DOOR FRAME ATTACHMENTS
ABOVE DIMENSIONS ARE MAXIMUM SIZES TESTED

FLORIDA BUILDING CODE (High Velocity Hurricane Zone)

©2011 TILTECO, INC

HR-250 CAPTURED CURTAIN WALL SYSTEM
LARGE MISSILE IMPACT LAMINATED GLASS

Oldcastle BuildingEnvelope™
803 Airport Rd - Terrell, TX 75160
www.OldcastleBE.com - Phone 800-869-4567

REV. No	DESCRIPTION	DATE
1	OLD 10-103	11/16/11
2	-	-
3	-	-
4	-	-

M.C.V./A.G. DRAWN BY:
11/18/11 DATE
11-124 DRAWING No
SHEET 36 OF 36

TILLIT TESTING & ENGINEERING COMPANY
6355 N.W. 36th. St. Ste. 305, VIRGINA GARDENS, FL. 33166
Phone : (305)871-1330 . Fax : (305)871-1331
e-mail: tilteco@aol.com
EB-0006719
WALTER A. TILLIT Jr. P.E.
FLORIDA Lic. # 44167

WALTER A. TILLIT JR. LICENSE No. 44167 STATE OF FLORIDA PROFESSIONAL ENGINEER
P.E. SIGNATURE/DATE

PRODUCT REVISED as complying with the Florida Building Code
Acceptance No 12-0104.05
Expiration Date Oct. 5, 2016
By Miami-Dade Product Control

MIAMI-DADE COUNTY