MIAMI-DADE COUNTY
DEPARTMENT OF PERMITTING, ENVIRONMENT, AND REGULATORY AFFAIRS (PERA)
BOARD AND CODE ADMINISTRATION DIVISION

MIAMI-DADE COUNTY
PRODUCT CONTROL SECTION
11805 SW 26 Street, Room 208
Miami, Florida 33175-2474
T (786) 315-2590 F (786) 315-2599
www.miamidade.gov/pera/

NOTICE OF ACCEPTANCE (NOA)

Oldcastle BuildingEnvelope™
803 Airport Road
Terrell, TX 75160

SCOPE:

This NOA is being issued under the applicable rules and regulations governing the use of construction materials. The documentation submitted has been reviewed and accepted by Miami-Dade County PERA - Product Control Section to be used in Miami Dade County and other areas where allowed by the Authority Having Jurisdiction (AHJ).

This NOA shall not be valid after the expiration date stated below. The Miami-Dade County Product Control Section (In Miami Dade County) and/or the AHJ (in areas other than Miami Dade County) reserve the right to have this product or material tested for quality assurance purposes. If this product or material fails to perform in the accepted manner, the manufacturer will incur the expense of such testing and the AHJ may immediately revoke, modify, or suspend the use of such product or material within their jurisdiction. PERA reserves the right to revoke this acceptance, if it is determined by Miami-Dade County Product Control Section that this product or material fails to meet the requirements of the applicable building code.

This product is approved as described herein, and has been designed to comply with the Florida Building Code, including the High Velocity Hurricane Zone.

DESCRIPTION: Series "FG-5000 Flush Glazed" Aluminum Window Wall System- L.M.I.

APPROVAL DOCUMENT: Drawing No. **11-196,** titled "Series FG-5000 Flush Glazed Aluminum Window Wall System – Large & Small Missile Impact Laminated Glass", sheets 1 through 8, 8A, 9 through 22 of 22, dated 12/01/11 with revision #1 dated 12/01/11, prepared by Tilteco, Inc., signed and sealed by Walter A. Tillit, Jr., P.E., bearing the Miami-Dade County Product Control Revision stamp with the Notice of Acceptance number and expiration date by the Miami-Dade County Product Control Section.

MISSILE IMPACT RATING: Large and Small Missile Impact Resistant

LABELING: Each unit shall bear a permanent label with the manufacturer's name or logo, city, state, model/series, and following statement: "Miami-Dade County Product Control Approved", unless otherwise noted herein.

RENEWAL of this NOA shall be considered after a renewal application has been filed and there has been no change in the applicable building code negatively affecting the performance of this product.

TERMINATION of this NOA will occur after the expiration date or if there has been a revision or change in the materials, use, and/or manufacture of the product or process. Misuse of this NOA as an endorsement of any product, for sales, advertising or any other purposes shall automatically terminate this NOA. Failure to comply with any section of this NOA shall be cause for termination and removal of NOA.

ADVERTISEMENT: The NOA number preceded by the words Miami-Dade County, Florida, and followed by the expiration date may be displayed in advertising literature. If any portion of the NOA is displayed, then it shall be done in its entirety.

INSPECTION: A copy of this entire NOA shall be provided to the user by the manufacturer or its distributors and shall be available for inspection at the job site at the request of the Building Official.

This NOA **revises NOA # 10-1214.15** and consists of this page 1 and evidence pages E-1, E-2 and E-3, as well as approval document mentioned above.

The submitted documentation was reviewed by **Manuel Perez, P.E.**

MIAMI-DADE COUNTY APPROVED

NOA No. 12-0109.06
Expiration Date: November 18, 2014
Approval Date: March 01, 2012

NOTICE OF ACCEPTANCE: EVIDENCE SUBMITTED

A. **DRAWINGS**

1. Manufacturer's die drawings and sections.
2. Drawing No **11-196**, Sheets 1 through 8, 8A, 9 through 22 of 22, titled "Series FG-5000 Flush Glazed Aluminum Window Wall System Large & Small Missile Impact Laminated Glass", dated 12/01/11 with revision #1 dated 12/01/11, prepared by Tilteco, Inc., signed and sealed by Walter A. Tillit, Jr., P.E.

B. **TESTS**

1. Test reports on: 1) Air Infiltration Test, per FBC, TAS 202-94
   2) Uniform Static Air Pressure Test, Loading per FBC TAS 202-94
   3) Water Resistance Test, per FBC, TAS 202-94
   4) Large Missile Impact Test per FBC, TAS 201-94
   5) Cyclic Wind Pressure Loading per FBC, TAS 203-94

   along with marked-up drawings and installation diagram of series FG-5000, wet glazed (Saflex by Solutia & Butacite by DuPont) storefront system, prepared by Architectural Testing, Inc., Test Report No. **ATI-A1052.01-801-18**, specimens #1, #2, #3 and #4, dated 08/16/10, signed and sealed by Joseph A. Reed, P.E.
   (Submitted under previous NOA #10-1214.15)
2. Test reports on: 1) Air Infiltration Test, per FBC, TAS 202-94
   2) Uniform Static Air Pressure Test, Loading per FBC TAS 202-94
   3) Water Resistance Test, per FBC, TAS 202-94
   4) Large Missile Impact Test per FBC, TAS 201-94
   5) Cyclic Wind Pressure Loading per FBC, TAS 203-94

   along with marked-up drawings and installation diagram of Vistawall FG-5000 Vanceva – wet glazed (Vanceva by Solutia) storefront system, prepared by Architectural Testing, Inc., Test Report No. **ATI-89818.01-401-18**, specimen #1, dated 03/19/09, signed and sealed by Joseph A. Reed, P.E. 3
   (Submitted under previous NOA #09-0721.03)
3. Test reports on: 1) Air Infiltration Test, per FBC, TAS 202-94
   2) Uniform Static Air Pressure Test, Loading per FBC TAS 202-94
   3) Water Resistance Test, per FBC, TAS 202-94
   4) Large Missile Impact Test per FBC, TAS 201-94
   5) Cyclic Wind Pressure Loading per FBC, TAS 203-94

   along with marked-up drawings and installation diagram of Vistawall FG-5000 Vanceva – wet glazed (SGP by DuPont) storefront system, prepared by Architectural Testing, Inc., Test Report No. **ATI-86111.01-401-18**, specimen #1, dated 02/09/09, signed and sealed by Joseph A. Reed, P.E.
   (Submitted under previous NOA #09-0721.03)

Manuel Perez, P.E.
Product Control Examiner
NOA No. 10-1214.15
Expiration Date: November 18, 2014
Approval Date: March 31, 2011

NOTICE OF ACCEPTANCE: EVIDENCE SUBMITTED

B. TESTS (CONTINUED)

4. Test reports on: 1) Air Infiltration Test, per FBC, TAS 202-94
2) Uniform Static Air Pressure Test, Loading per FBC TAS 202-94
3) Water Resistance Test, per FBC, TAS 202-94
4) Large Missile Impact Test per FBC, TAS 201-94
5) Cyclic Wind Pressure Loading per FBC, TAS 203-94
along with marked-up drawings and installation diagram of Vistawall FG-5000 and FG-5100 corner storefront system, prepared by Architectural Testing, Inc., Test Report No. **ATI-86107.01-401-18**, specimens: #1R **(E9),** #2 **(E10),** #3 **(E11),** dated 02/26/09, signed and sealed by Joseph A. Reed, P.E.
(Submitted under previous NOA #09-0721.03)

5. Test reports on: 1) Air Infiltration Test, per FBC, TAS 202-94
2) Uniform Static Air Pressure Test, Loading per FBC TAS 202-94
3) Water Resistance Test, per FBC, TAS 202-94
4) Large Missile Impact Test per FBC, TAS 201-94
5) Cyclic Wind Pressure Loading per FBC, TAS 203-94
along with marked-up drawings and installation diagram of Vistawall FG-5000, wet glazed (Saflex by Solutia & Butacite by DuPont) storefront system, prepared by Architectural Testing, Inc., Test Report No. **ATI-74785.02-401-18**, specimens #1, #2, #3 and #4, dated 08/29/07, signed and sealed by Joseph A. Reed, P.E.
(Submitted under previous NOA #09-0721.03)

C. CALCULATIONS

1. Anchor verification calculations and structural analysis, complying with FBC-2007 and FBC-2010, prepared by Tilteco, Inc., dated 7/16/09 and updated on 01/06/12, signed and sealed by Walter A. Tillit, Jr., P.E.

2. Glazing complies with ASTM E1300-04

D. QUALITY ASSURANCE

1. Miami-Dade Department of Permitting, Environment, and Regulatory Affairs (PERA).

Manuel Perez, P.E.
Product Control Examiner
NOA No. 12-0109.06
Expiration Date: November 18, 2014
Approval Date: March 01, 2012

NOTICE OF ACCEPTANCE: EVIDENCE SUBMITTED

E. MATERIAL CERTIFICATIONS

1. Notice of Acceptance No. **11–0624.02** issued to **E.I. DuPont DeNemours & Co.**, Inc. for their "**DuPont SentryGlas® Interlayer**" dated 08/25/11, expiring on 01/14/17.
2. Notice of Acceptance No. **11–0624.01** issued to **E.I. DuPont DeNemours & Co., Inc.** for their "**DuPont Butacite® PVB Interlayer**" dated 09/08/11, expiring on 12/11/16.
3. Notice of Acceptance No. **11–0325.05** " issued to Solutia, Inc. for their "**Saflex and Vanceva clear and color interlayers**" dated 05/05/11, expiring on 05/21/16
4. Notice of Acceptance No. **08–1224.04** issued to Solutia, Inc. for their "**Saflex Composites Glass Interlayer with PET Core**" dated 02/25/09, expiring on 12/11/13.

F. STATEMENTS

1. Statement letter of conformance, complying with FBC-2007 and FBC-2010, dated January 6, 2012, signed and sealed by Walter A. Tillit, Jr., P.E.
2. Statement letter of no financial interest, dated November 17, 2010, signed and sealed by Walter A. Tillit, Jr., P.E.
3. Name change documentation, dated September, 2010, was submitted under previous **NOA# 10-1214.15.**
4. Laboratory compliance letter for Test Report No. **ATI-86107.01-401-18**, issued by Architectural Testing, Inc., dated 4/21/09, signed and sealed by Joseph A. Reed, P.E. ***(Submitted under previous NOA #10-1214.15)***
5. Laboratory compliance letter for Test Report No. **ATI-86111.01-401-18**, issued by Architectural Testing, Inc., dated 4/21/09, signed and sealed by Joseph A. Reed, P.E. ***(Submitted under previous NOA #10-1214.15)***
6. Laboratory compliance letter for Test Report No. **ATI-89818.01-401-18**, issued by Architectural Testing, Inc., dated 4/27/09, signed and sealed by Joseph A. Reed, P.E. ***(Submitted under previous NOA #10-1214.15)***

G. OTHERS

1. Notice of Acceptance No. 1**0-1214.15**, issued to Oldcastle Building Envelope™ for their **Series "FG-5000 Flush Glazed" Aluminum Window Wall System – L.M.I.**, approved on 03/31/11 and expiring on 11/18/14.

Manuel Perez, P.E.
Product Control Examiner
NOA No. 12-0109.06
Expiration Date: November 18, 2014
Approval Date: March 01, 2012

PRODUCT APPROVAL FOR SERIES FG-5000 FLUSH GLAZED ALUMINUM WINDOW WALL SYSTEM FOR USE IN HURRICANE ZONES REQUIRING LARGE & SMALL MISSILE IMPACT PROTECTION.

GENERAL NOTES:

1. SERIES FG-5000 FLUSH GLAZED ALUMINUM WINDOW WALL SYSTEM LARGE & SMALL MISSILE IMPACT LAMINATED GLASS, SHOWN ON THIS PRODUCT APPROVAL DOCUMENT (P.A.D.) HAS BEEN VERIFIED FOR COMPLIANCE IN ACCORDANCE WITH THE 2007 & 2010 EDITIONS OF THE FLORIDA BUILDING CODE. SERIES FG-5000 FLUSH GLAZED ALUMINUM WINDOW WALL SYSTEM MAY BE INSTALLED WITHIN HIGH VELOCITY HURRICANE ZONES.

   DESIGN WIND LOADS SHALL BE DETERMINED AS PER SECTION 1620 OF THE ABOVE MENTIONED CODES, USING ASCE 7-05 STANDARD FOR INSTALLATIONS UNDER 2007 FBC & ASCE 7-10 FOR INSTALLATIONS UNDER 2010 FBC AND SHALL NOT EXCEED THE MAXIMUM (A.S.D.) DESIGN PRESSURE RATINGS INDICATED ON NOTE 2. IN ORDER TO VERIFY THE ABOVE CONDITION, ULTIMATE DESIGN WIND LOADS DETERMINED PER ASCE 7-10 SHALL BE FIRST REDUCED TO A.S.D. DESIGN WIND LOADS BY MULTIPLYING THEM BY 0.6 IN ORDER TO TO COMPARE THESE W/ MAX. (A.S.D) DESIGN PRESSURE RATINGS INDICATED ON NOTE 2.

   IN ORDER TO VERIFY THAT ANCHORS ON THIS P.A.D., AS TESTED, WERE NOT OVERSTRESSED, A 33% INCREASE IN ALLOWABLE STRESS FOR WIND LOADS WAS **NOT** USED IN THEIR ANALYSIS. FASTENERS SPACING TO WOOD HAS BEEN DETERMINED IN ACCORDANCE WITH N.D.S. 2005.

   THIS PRODUCT'S ADEQUACY FOR IMPACT AND CYCLIC RESISTANCE HAS BEEN VERIFIED IN ACCORDANCE WITH SECTION 1626 OF THE ABOVE MENTIONED CODES AS PER PROTOCOLS TAS-201, TAS-202, TAS-203, PER ARCHITECTURAL TESTING, INC. LABORATORY REPORTS # 74785.02-401-18, 89818.01-401-18, 86107.01-401-18, 86111.01-401-18, A1052.01-801-18 AND AS PER SUBMITTED STRUCTURAL CALCULATIONS, PERFORMED AS PER SECTION 1612 OF THE FLORIDA BUILDING CODE.

2. MAXIMUM A.S.D. DESIGN PRESSURE RATING FOR THIS WINDOW WALL SYSTEM SHALL BE AS SHOWN ON SHEETS 6, 7, 8, 8A, 13, 19 AND 20.

3. THIS PRODUCT WILL NOT REQUIRE A HURRICANE PROTECTION DEVICE.

4. THIS PRODUCT IS APPROVED FOR AIR/WATER INFILTRATION (SEE SCHEDULE ON SHEET 7).

5. SERIES FG-5000 FLUSH GLAZED ALUMINUM WINDOW WALL SYSTEM LARGE & SMALL MISSILE IMPACT LAMINATED GLASS SHALL COMPLY WITH SECTIONS 2406.1, 2411.4.1 AND 2411.4.2 OF THE FLORIDA BUILDING CODE.

6. PROVIDE 1 3/8" MAX. LOAD BEARING SHIM (TYP.), WHEN ALLOWED BY THIS DRAWING.

7. WOOD BUCKS BY OTHERS, MUST BE ANCHORED PROPERLY TO TRANSFER LOADS TO THE BUILDING STRUCTURE. WOOD BUCKS MUST BE SOUTHERN PINE, G = 0.55.

8. REMAINING COMPONENTS FOR THIS WINDOW WALL SYSTEM SHALL BE AS INDICATED ON BILL OF MATERIALS, SHEET 3 OF THIS DRAWING.

9. ALL ALUMINUM EXTRUSIONS IN CONTACT WITH STEEL, CONCRETE, GROUT FILLED CONCRETE BLOCK AND WOOD SHALL COMPLY WITH SECTIONS 2003.8.4.2, 2003.8.4.4, 2003.8.5 AND 2003.8.6 OF THE FLORIDA BUILDING CODE, RESPECTIVELY.

10. SHOP DRAWINGS PREPARED BASED ON THIS APPROVAL AND TAKING INTO ACCOUNT THE SPECIFIC JOB CONDITIONS, SHALL BE SUBMITTED TO THE BUILDING OFFICIAL AS PART OF THE PERMIT DOCUMENTS.

11. STRUCTURAL SUBSTRATES NOTED ON THIS DRAWING AS EXISTING STEEL BY OTHERS, POURED CONCRETE, GROUT FILLED CONCRETE BLOCK AND WOOD MUST WITHSTAND THE LOADS IMPOSED BY THIS PRODUCT.

12. (a) THIS P.A.D. PREPARED BY THIS ENGINEER IS GENERIC AND DOES NOT PROVIDE INFORMATION FOR A SITE SPECIFIC PROJECT; i.e. WHERE THE SITE CONDITIONS DEVIATE FROM THE P.A.D.

    (b) CONTRACTOR TO BE RESPONSIBLE FOR THE SELECTION, PURCHASE AND INSTALLATION INCLUDING LIFE SAFETY OF THIS PRODUCT, BASED ON THIS P.A.D., PROVIDED HE/SHE DOES NOT DEVIATE FROM THE CONDITIONS DETAILED ON THIS DOCUMENT. CONSTRUCTION SAFETY AT SITE IS THE CONTRACTOR'S RESPONSIBILITY.

    (c) THIS P.A.D. WILL BE CONSIDERED INVALID IF ALTERED BY ANY MEANS.

    (d) SITE SPECIFIC PROJECTS SHALL BE PREPARED BY A FLORIDA REGISTERED ENGINEER OR ARCHITECT WHICH WILL BECOME THE ENGINEER OF RECORD (E.O.R.) FOR THE PROJECT AND WHO WILL BE RESPONSIBLE FOR THE PROPER USE OF THE P.A.D. ENGINEER OF RECORD, ACTING AS DELEGATED ENGINEER TO THE P.A.D. ENGINEER, SHALL SUBMIT TO THIS LATTER THE SITE SPECIFIC DRAWINGS FOR REVIEW.

    (e) ORIGINAL P.A.D. SHALL BEAR THE DATE AND ORIGINAL SEAL AND SIGNATURE OF THE PROFESSIONAL ENGINEER OF RECORD THAT PREPARED IT.

13. WINDOW WALL SYSTEM MANUFACTURER'S LABEL SHALL BE PLACED ON A READILY VISIBLE LOCATION. ONE LABEL SHALL BE PLACED FOR EVERY UNIT. LABEL SHALL READ AS FOLLOWS:

    Oldcastle
    BuildingEnvelope™
    TERRELL, TX.
    MIAMI-DADE COUNTY PRODUCT CONTROL APPROVED.
    SERIES (FG-5000 FLUSH GLAZED) ALUMINUM WINDOW WALL SYSTEM - L.M.I.

INDEX:

SHEET 1: GENERAL NOTES, INDEX AND INSTRUCTIONS.
SHEET 2: COMPONENTS.
SHEET 3: BILL OF MATERIALS.
SHEET 4: ISOMETRIC ELEVATION FOR FG-5000 FLUSH GLAZED ALUMINUM WINDOW WALL SYSTEM.
SHEET 5: TYPICAL GLAZING DETAILS & GLASS SCHEDULE.
SHEET 6: MAXIMUM A.S.D. DESIGN PRESSURE RATING SCHEDULE FOR A GIVEN GLASS TYPE AND GLASS PANEL DIMENSIONS.
SHEET 7: MAXIMUM A.S.D. DESIGN PRESSURE RATING FOR STANDARD AND CORNER MULLIONS.
SHEET 8: MAXIMUM A.S.D. DESIGN PRESSURE RATING FOR MULLION CONNECTIONS W/ 4" MIN. E.D. EXCEPT AS NOTED.
SHEET 8A: MAXIMUM A.S.D. DESIGN PRESSURE RATING FOR MULLION CONNECTIONS W/ 2 3/4" MIN. E.D., EXCEPT AS NOTED.
SHEET 9: SILL AND HEAD CONNECTIONS DETAILS FOR STANDARD MULLIONS AND JAMBS (PLAN VIEWS).
SHEET 10: SILL AND HEAD CONNECTION DETAILS FOR CORNER MULLIONS (PLAN VIEWS).
SHEET 11: HEAD CONNECTION DETAILS (SIDE VIEW).
SHEET 12: HEAD CONNECTION DETAILS (SIDE VIEW) (CONTINUED).
SHEET 13: HORIZONTAL CONNECTION DETAIL (SIDE VIEW), WINDOW WALL ELEVATION W/ HORIZONTAL, MAXIMUM A.S.D. DESIGN PRESSURE RATING FOR HORIZONTAL AND MAXIMUM A.S.D. DESIGN PRESSURE RATING FOR JAMBS W/O ANCHORAGE.
SHEET 14: SILL CONNECTION DETAILS (SIDE VIEWS).
SHEET 15: SILL CONNECTION DETAILS (SIDE VIEWS) (CONTINUED).
SHEET 16: SILL CONNECTION DETAILS (SIDE VIEWS) (CONTINUED).
SHEET 17: HORIZONTAL SECTIONS AT STANDARD AND CORNER MULLION.
SHEET 18: HORIZONTAL SECTIONS AT JAMBS.
SHEET 19: MAXIMUM A.S.D DESIGN PRESSURE RATING FOR JAMBS FASTENED W/ 3/8"ø FASTENERS.
SHEET 20: MAXIMUM A.S.D. DESIGN PRESSURE RATING FOR JAMBS FASTENED W/ 1/2"ø FASTENERS.
SHEET 21: CORNER DETAIL AT JAMB.
SHEET 22: DOOR JAMB MULLION INSTALLATION ADJACENT TO WINDOW WALL.

INSTRUCTIONS:

STEP 1: DETERMINE A.S.D. DESIGN WIND LOAD REQUIREMENTS BASED ON WIND VELOCITY, BUILDING HEIGHT, WIND ZONE, USING APPLICABLE ASCE 7 STANDARDS.

STEP 2: GO TO SCHEDULE ON SHEET 6 TO DETERMINE MAXIMUM A.S.D. DESIGN PRESSURE RATING (psf) OF DESIRED GLASS SIZE BASED ON GLASS PANEL DIMENSIONS.

STEP 3: DETERMINE MAXIMUM MULLION SPAN "L"(FT) FOR A GIVEN MULLION EFFECTIVE SPACING "b", ON SCHEDULE ON SHEET 7, AND SELECT ANCHOR OPTION W/ A.S.D. DESIGN PRESSURE RATING EQUAL OR GREATER THAN DESIGN LOAD SPECIFIED IN STEP 1 USING SCHEDULES ON SHEETS 8 AND 8A.

STEP 4: USE SCHEDULES ON SHEETS 19 AND 20, TO SELECT JAMB ANCHOR OPTION W/ ANCHORAGE OR SHEET 13 FOR W/O ANCHORAGE WITH A.S.D. DESIGN PRESSURE RATING EQUAL OR GREATER THAN A.S.D. DESIGN LOAD SPECIFIED IN STEP 1.

STEP 5: USE SCHEDULE ON SHEET 13, TO VERIFY MAXIMUM A.S.D. DESIGN PRESSURE RATING OF HORIZONTALS (IF USED), TO BE EQUAL OR GREATER THAN DESIGN LOAD SPECIFIED IN STEP 1.

STEP 6: THE LOWEST VALUE OF A.S.D. DESIGN PRESSURE RATING RESULTING FROM STEPS 2, 3, 4 AND 5 SHALL APPLY TO THE ENTIRE SYSTEM.

FLORIDA BUILDING CODE (High Velocity Hurricane Zone)

SERIES FG-5000 FLUSH GLAZED ALUMINUM WINDOW WALL SYSTEM LARGE & SMALL MISSILE IMPACT LAMINATED GLASS

DRAWN BY: L.G./M.E.V./A.G.

12/01/11 DATE

11-196 DRAWING No.

SHEET 1 OF 22

Oldcastle BuildingEnvelope™
803 Airport Rd - Terrell, TX 75160
www.OldcastleBE.com - Phone 800-863-4567

REV. No.	DESCRIPTION	DATE	REV. No.	DESCRIPTION	DATE
1	OLD 10-076	12/15/11	3		
2			4		

©2011 TILTECO, INC

TILLIT TESTING & ENGINEERING COMPANY
6355 N.W. 36th. St., Ste. 305, Virginia Gardens, FL. 33166
Phone: (305)871-1530 - Fax: (305)871-1531
e-mail: tilteco@aol.com
EB-0005719
WALTER A. TILLIT Jr. P.E.
FLORIDA Lic. # 44167

WALTER A. TILLIT JR. LICENSE NO. 44167 STATE OF FLORIDA PROFESSIONAL ENGINEER

P.E. SEAL/SIGNATURE/DATE

PRODUCT REVISED
as complying with the Florida
Building Code
Acceptance No 12-0104.06
Expiration Date Nov. 13, 2014
By
Miami-Dade Product Control

MIAMI-DADE COUNTY

FG-5000 FLUSH GLAZED ALUMINUM WINDOW WALL SYSTEM COMPONENTS

SCALE : 3/8" = 1"

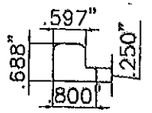

(2) SETTING BLOCK
FG-5199

(3) SPACER GASKET
FG-5185

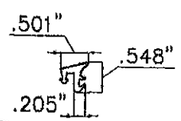

(4) GASKET
FG-1133

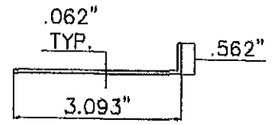

(15) SILL END DAM
FG-5000-FP10

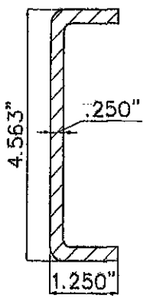

(16) STEEL REINFORCEMENT
FG-5000-PP8

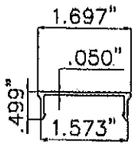

(17) CHANNEL FILLER
@ HEAD & SILL
FG-5113

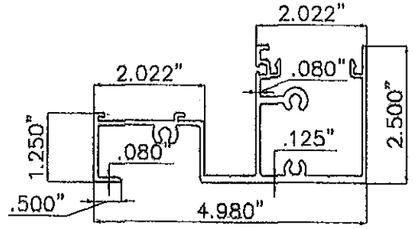

(18) HEAD / SILL
FG-5204

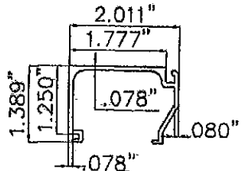

(19) GLASS STOP
FG-5190

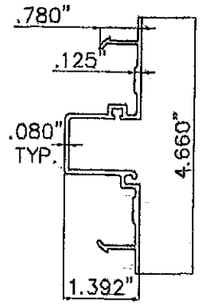

(20) POCKET FILLER
FG-5196

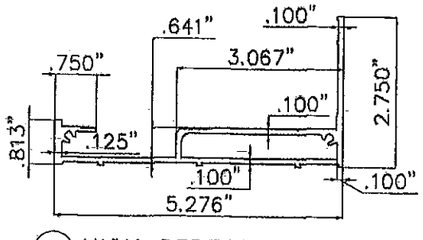

(21) HIGH PERFORMANCE
SILL PAN
FG-5205

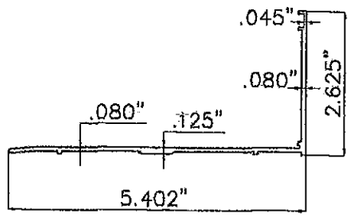

(22) SILL PAN
FG-5180

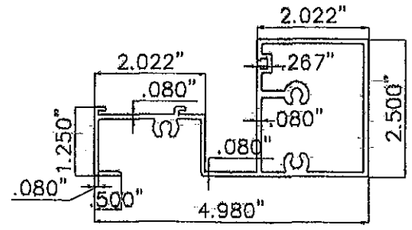

(23) SILL / HEAD
FG-5206

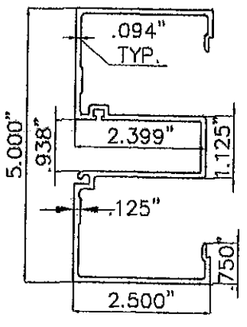

(24) JAMB
FG-5201

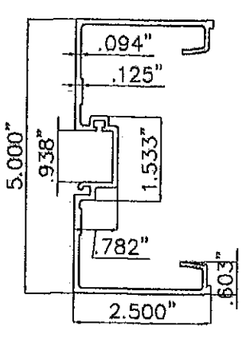

(26) MULLION
FG-5193

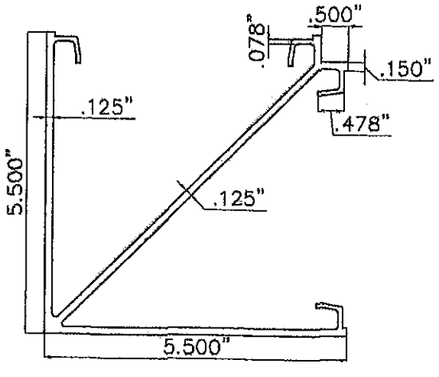

(27) 90 DEGREE CORNER MULLION
FG-5200

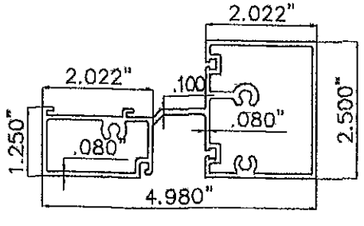

(28) HORIZONTAL
FG-5202

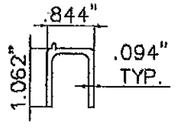

(31) SETTING CHAIR
FG-5192

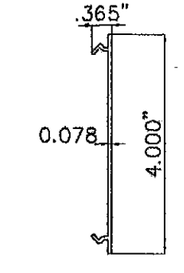

(32) VINYL FILLER
FG-2188

FLORIDA BUILDING CODE (High Velocity Hurricane Zone)

SERIES FG-5000 FLUSH GLAZED
ALUMINUM WINDOW WALL SYSTEM
LARGE & SMALL MISSILE IMPACT LAMINATED GLASS

Oldcastle BuildingEnvelope™
803 Airport Rd - Terrell, TX 75160
www.OldcastleBE.com - Phone 800-869-4567

DRAWN BY: L.G./M.E.V./A.G.
12/01/11 DATE
11-196 DRAWING No
SHEET 2 OF 22

REV. No	DESCRIPTION	DATE
1	OLD 10-075	12/04/11
2		
3		
4		

©2011 TILLECO, INC

TILLECO INC.
TILLIT TESTING & ENGINEERING COMPANY
8555 NW 36th St., Suite 325, Miami (Doral), FL 33166
Phone: (305)971-1330, Fax: (305)971-1331
e-mail: tilteco@aol.com
EB-0006719
WALTER A. TILLIT Jr. P.E.
FLORIDA Lic. # 44167

WALTER A. TILLIT JR. LICENSE NO. 44167 STATE OF FLORIDA PROFESSIONAL ENGINEER

P.E. SEAL/SIGNATURE/DATE

PRODUCT REVISED
as complying with the Florida
Building Code
Acceptance No. 12-0104.06
Expiration Date Jan. 18, 2014
By [signature]
Miami-Dade Product Control

MIAMI-DADE COUNTY

BILL OF MATERIALS

ITEM No.	PART NUMBER	DESCRIPTION	DIMENSIONS	MATERIAL	MANUFACTURER	NOTES
1.	FS-54	PHILLIPS FLAT HEAD MACHINE SCREW UC	#10-24 x 3/8"	STEEL	VARIES	ZINC COATED, PER ASTM B-633.
2.	FG-5199	SETTING BLOCK	.800" x .688" x 4.00"	EPDM	EPG	
3.	FG-5185	SPACER GASKET	.250" x .250"	EPDM	EPG	
4.	FG-1133	GASKET	.500" x .548"	EPDM	EPG	
7.	FS-8	SPLINE ASSEMBLY SCREW	#14 x 1" HHSTS FS-322	STEEL	VARIES	STALGARD COATED, BY ELCO
8.	ANCHOR	SILL ANCHOR SCREW	#14 x 3/4" HHVTEK		ITW/BUILDEX	ZINC COATED, PER ASTM B-633.
9.	ANCHOR	HEAD ANCHOR SCREW	#14 x 1 1/2" HHVTEK		ITW/BUILDEX	ZINC COATED, PER ASTM B-633.
11.	FASTENER	PPH SELF TAPPING SCREW	#10 x 2 1/2"	STEEL	VARIES	ZINC COATED, PER ASTM B-633.
12.	FASTENER	PPH STEEL ATTACHMENT SCREW	#10 x 1"	STEEL	VARIES	ZINC COATED, PER ASTM B-633.
13.	SM-5601	ISOCRYL TAPE	.125" x .500" VARIES	POLYISOBUTYLENE	SCHNEE-MOOREHEAD	
14.	FG5000-FP-5	WATER DIVERTER	.876" x .54147" x .040"	RIGID PVC	OBE	
15.	FG-5000-FP-10	SILL END DAM	3.500" x .562" x 0.062" x 5.000"	6063-T6 ALUMINUM	OBE	
16.	FG-5000-PP8	STEEL REINFORCEMENT	1.250" x 4.563" x .250"	ZINC PAINTED STEEL	VARIES	ASTM A-36
17.	FG-5113	CHANNEL FILLER @ HEAD & SILL	1.697" x .500" x .062"	6063-T5	OBE	
18.	FG-5204	HEAD / SILL	4.980" x 2.500" x .080"	6063-T6	OBE	
19.	FG-5190	GLASS STOP	2.010" x 1.392" x .078"	6063-T5	OBE	
20.	FG-5196	POCKET FILLER	4.660" x 1.392" x .080"	6063-T5	OBE	
21.	FG-5205	HIGH PERFORMANCE SILL PAN	5.276" x 2.750" x .100"	6063-T6	OBE	
22.	FG-5180	SILL PAN	5.402" x 2.625" x .080"	6063-T6	OBE	
23.	FG-5206	SILL / HEAD	4.980" x 2.500" x .080"	6063-T6	OBE	
24.	FG-5201	JAMB	5.000" x 2.500" x .094"	6063-T6	OBE	
25.	NOT USED					
26.	FG-5193	MULLION	5.000" x 2.500" x .094"	6063-T6	OBE	
27.	FG-5200	90 DEGREE CORNER MULLION	5.500" x 5.500" x .125"	6063-T6	OBE	
28.	FG-5202	HORIZONTAL	4.980" x 2.500" x .080"	6063-T6	OBE	
29.	995	STRUCTURAL SEALANT	-	SILICONE	DOW CORNING	# 995
30.	795	PERIMETER SEALANT	-	SILICONE	DOW CORNING	# 795
31.	FG-5192	SETTING CHAIR	.844" x 1.062" x .094"	6063-T5	OBE	
32.	FG-2122	ALUMINUM JAMB FILLER	4.000" x .365" x .078"	6063-T6	EPG	
34.	ANCHOR	PFH TEK SCREW	#10 x 2.000"	ZINC COATED STEEL	VARIES	ZINC COATED, PER ASTM B-633.

FLORIDA BUILDING CODE (High Velocity Hurricane Zone)

©2011 TILTECO, INC

SERIES FG-5000 FLUSH GLAZED ALUMINUM WINDOW WALL SYSTEM LARGE & SMALL MISSILE IMPACT LAMINATED GLASS

DRAWN BY: L.G./M.C.V./A.G.

12/01/11 DATE

11-196 DRAWING No

SHEET 3 OF 22

Oldcastle BuildingEnvelope™
803 Airport Rd - Terrell, TX 75160
www.OldcastleBE.com - Phone 800-869-4567

DEV. No.	DESCRIPTION	DATE	DEV. No.	DESCRIPTION	DATE
3	OLD 10-076	12/01/11	3		
2			4		

TILLIT TESTING & ENGINEERING COMPANY
6335 N.W. 36th. St., Ste. 305, VIRGINIA GARDENS, FL. 33166
Phone : (305)871-1530 . Fax : (305)871-1531
e-mail: tilteco@aol.com
EB-0006719
WALTER A. TILLIT Jr. P.E.
FLORIDA Lic. # 44167

WALTER A. TILLIT JR. LICENSE No. 44167 STATE OF FLORIDA PROFESSIONAL ENGINEER

P.E. SEAL/SIGNATURE/DATE

PRODUCT REVISED as complying with the Florida Building Code
Acceptance No 12-0109.04
Expiration Date Nov 18, 2014
By Miami-Dade Product Control

MIAMI-DADE COUNTY

ISOMETRIC ELEVATION FOR FG-5000 FLUSH GLAZED ALUM. WINDOW WALL SYSTEM

N.T.S.

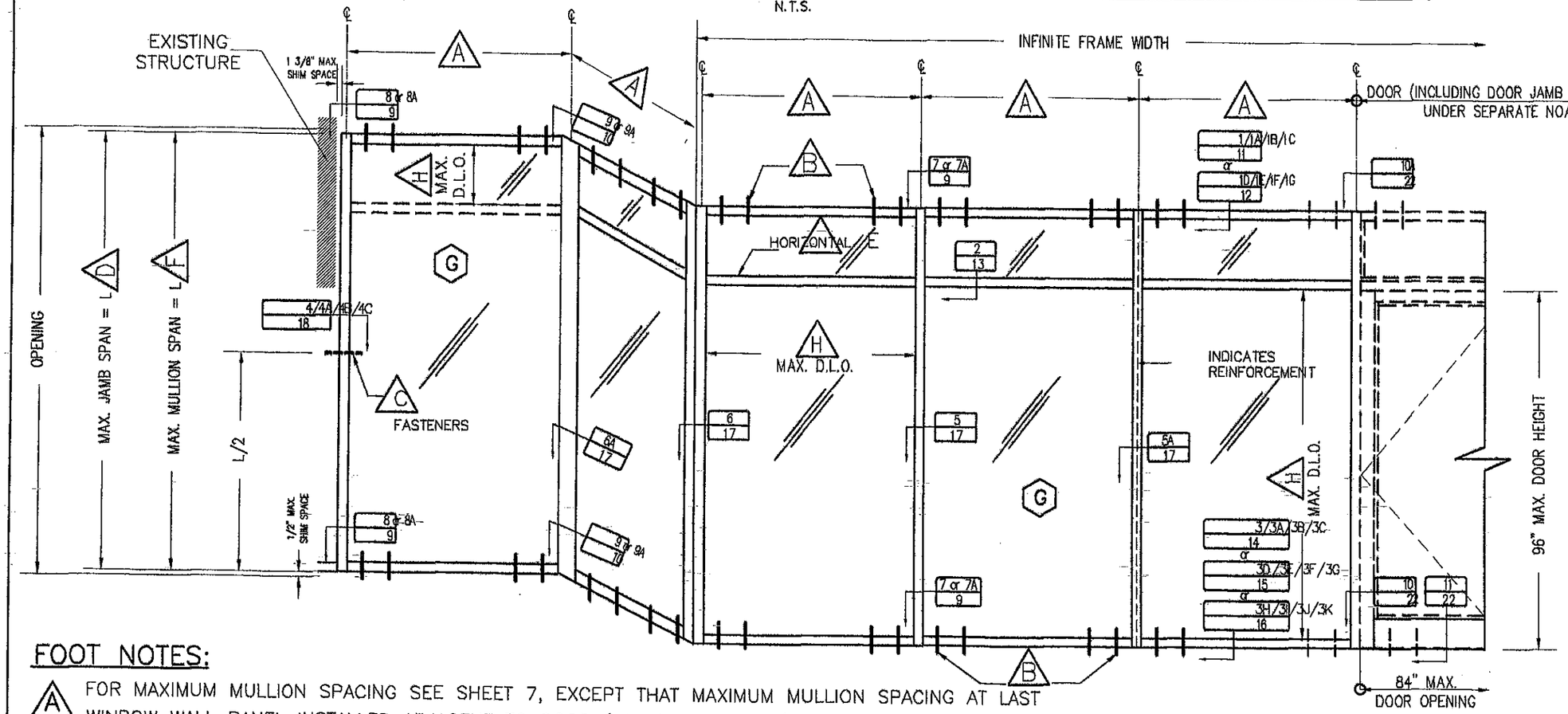

FOOT NOTES:

A. FOR MAXIMUM MULLION SPACING SEE SHEET 7, EXCEPT THAT MAXIMUM MULLION SPACING AT LAST WINDOW WALL PANEL INSTALLED ADJACENT TO DOOR (WHEN APPLICABLE) SHALL NOT EXCEED 5'-0".

B. FOR HEAD AND SILL FASTENERS QUANTITY, TYPES AND SPECS SEE SHEETS 8 & 8A.

C. SEE SHEETS 19 & 20 FOR MAXIMUM A.S.D. DESIGN PRESSURE RATING FOR JAMB CONNECTED TO EXISTING STRUCTURE.

D. SEE SHEET 13 FOR MAXIMUM A.S.D. DESIGN PRESSURE RATING FOR JAMB NOT CONNECTED TO EXISTING STRUCTURE.

E. USE OF HORIZONTALS (SEE SECTION 2/13) IS LIMITED BY SCHEDULE ON SHEET 13.

F. FOR MAXIMUM MULLION SPAN SEE SHEET 7.

G. FOR GLAZING DETAILS AND GLASS SCHEDULE SEE SHEET 5.

H. FOR MAXIMUM D.L.O. AND A.S.D. DESIGN PRESSURE RATING FOR GLASS, SEE SCHEDULE ON SHEET 6.

FLORIDA BUILDING CODE (High Velocity Hurricane Zone)

SERIES FG-5000 FLUSH GLAZED ALUMINUM WINDOW WALL SYSTEM LARGE & SMALL MISSILE IMPACT LAMINATED GLASS

DRAWN BY: L.G./M.C.V./A.G.

12/01/11 DATE

11-196 DRAWING No

SHEET 4 OF 22

REV. No.	DESCRIPTION	DATE
1	OLD 10-295	12/01/11
2		

Oldcastle BuildingEnvelope™
803 Airport Rd - Terrell, TX 75160
www.OldcastleBE.com - Phone 800-869-4567

©2011 TILTECO, INC

TILTECO INC.
TESTING & ENGINEERING COMPANY
TILLIT TESTING & ENGINEERING COMPANY
6355 N.W. 36th. St., Ste. 305, VIRGINIA GARDENS, FL. 33166
Phone : (305)871-1530 . Fax : (305)871-1537
e-mail: tilteco@aol.com
EB-0006719
WALTER A. TILLIT Jr. P.E.
FLORIDA Lic. # 44167

WALTER A. TILLIT JR. LICENSE No. 44167 STATE OF FLORIDA PROFESSIONAL ENGINEER
12/1/11
P.E. SEAL/SIGNATURE/DATE

PRODUCT REVISED as complying with the Florida Building Code
Acceptance No 12-0109.04
Expiration Date Nov 18, 2014
By Miami-Dade Product Control

MIAMI-DADE COUNTY

TYPICAL GLAZING DETAILS

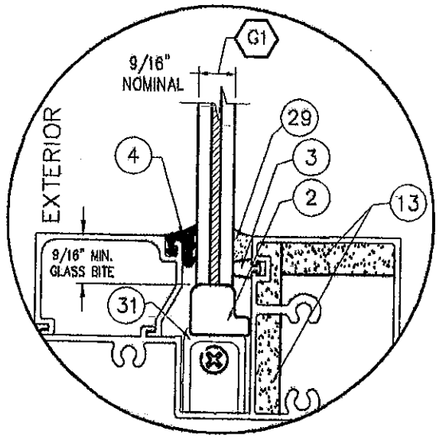

GLASS TYPE G1

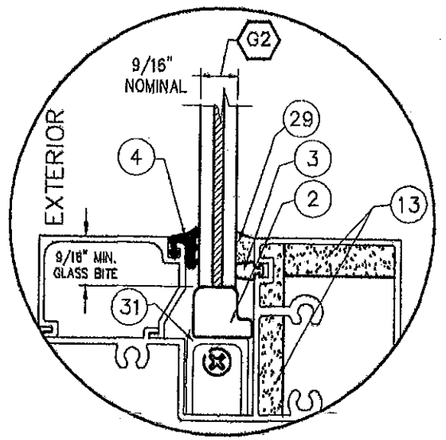

GLASS TYPE G2

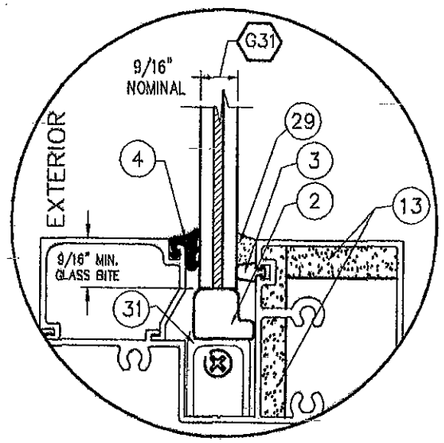

GLASS TYPE G31

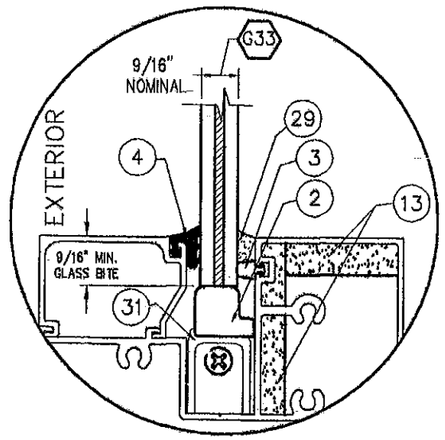

GLASS TYPE G33

GLASS SCHEDULE

GLASS LABEL	GLASS COMPOSITION	MANUFACTURER NAME	MAXIMUM D.L.O.
G1	9/16" OVERALL THICKNESS LAMINATED GLASS CONSISTING OF TWO 1/4" HS GLASS, AND A 0.090" BUTACITE PVB INTERLAYER	DUPONT	SEE SCHEDULE ON SHEET 6
G2	9/16" OVERALL THICKNESS LAMINATED GLASS CONSISTING OF TWO 1/4" HS GLASS, AND A 0.090" SENTRYGLAS PLUS INTERLAYER	DUPONT	SEE SCHEDULE ON SHEET 6
G31	9/16" OVERALL THICKNESS LAMINATED GLASS CONSISTING OF TWO 1/4" HS GLASS, AND A 0.090" SAFLEX PVB INTERLAYER	SOLUTIA	SEE SCHEDULE ON SHEET 6
G33	9/16" OVERALL THICKNESS LAMINATED GLASS CONSISTING OF TWO 1/4" HS GLASS, AND A 0.075" VANCEVA/STORMGLASS COMPOSITE INTERLAYER	SOLUTIA	SEE SCHEDULE ON SHEET 6

FLORIDA BUILDING CODE (High Velocity Hurricane Zone)

©2011 TILTECO, INC

TILLIT TESTING & ENGINEERING COMPANY
6355 N.W. 36th. St., Suite 305, VIRGINIA GARDENS, FL. 33166
Phone: (305)871-1530 . Fax: (305)871-1531
e-mail: tilteco@aol.com
EB-0006719
WALTER A. TILLIT Jr. P.E.
FLORIDA Lic. # 44167

SERIES FG-5000 FLUSH GLAZED
ALUMINUM WINDOW WALL SYSTEM
LARGE & SMALL MISSILE IMPACT LAMINATED GLASS

Oldcastle BuildingEnvelope™
803 Airport Rd - Terrell, TX 75160
www.OldcastleBE.com - Phone 800-869-4567

DRAWN BY: LG./M.C.V./A.G.

12/01/11 DATE

11-196 DRAWING No

REV. No.	DESCRIPTION	DATE	REV. No.	DESCRIPTION	DATE
1	O.D. 10-076	12/16/11	3		
2			4		

SHEET 5 OF 22

WALTER A. TILLIT JR. LICENSE No 44167 STATE OF FLORIDA PROFESSIONAL ENGINEER

P.E. SEAL/SIGNATURE/DATE

PRODUCT REVISED
as complying with the Florida Building Code
Acceptance No 12-1129.06
Expiration Date Nov. 18, 2014
By Miami-Dade Product Control

MIAMI-DADE COUNTY

MAXIMUM A.S.D. DESIGN PRESSURE RATING (psf) SCHEDULE FOR A GIVEN GLASS TYPE AND GLASS PANEL DIMENSIONS "b" (in) x "a" (in) (SEE LEGEND)

GLASS TYPE G1 & G31		
DIMENSION "b" *	DIMENSION "a" *	MAXIMUM A.S.D.DESIGN PRESSURE RATING(psf)
24"	from 24" to 115"	±65.0
30"	from 30" to 115"	±65.0
36"	from 36" to 115"	±65.0
41.75"	from 41.75" to 102.5"	±65.0
48"	from 48" to 89"	±56.5
54"	from 54 to 79"	±50.3
57.5"	from 57.5" to 74"	±47.0

GLASS TYPE G2		
DIMENSION "b" *	DIMENSION "a" *	MAXIMUM A.S.DDESIGN PRESSURE RATING(psf)
24"	from 24" to 115"	±90.0
30"	from 30" to 115"	±90.0
36"	from 36" to 115"	±90.0
42"	from 42" to 115"	±90.0
47.5"	from 47.5" to 115"	±90.0
54"	from 54 to 101"	±79.2
57.5"	from 57.5" to 95"	±74.3

GLASS TYPE G33		
DIMENSION "b" *	DIMENSION "a" *	MAXIMUM A.S.D.DESIGN PRESSURE RATING(psf)
24"	from 24" to 115"	+70, −80
30"	from 30" to 115"	+70, −80
36"	from 36" to 115"	+70, −80
42"	from 42" to 115"	+70, −80
48"	from 48 to 115"	+70, −80
54"	from 54 to 102"	+70, −80
57.5"	from 57.5" to 96"	+70, −80

* DETERMINATION OF MAXIMUM DAY LIGHT OPENING (D.L.O.) AT EACH END OF GLASS GIVEN "b" & "a"

SIDE	MAXIMUM DAY LIGHT OPENING	
	(D.L.O.) Formula at Vertical & Horizontal Mullions	(D.L.O.) Formula at Jamb, Head & Sill Frames
MAX. D.L.O. (b) (SHORT SIDE)	"b"−5.00"	"b"−5.00"
MAX. D.L.O. (a) (LONG SIDE)	"a"−5.00"	"a"−5.00"

DIMENSIONS LEGEND *

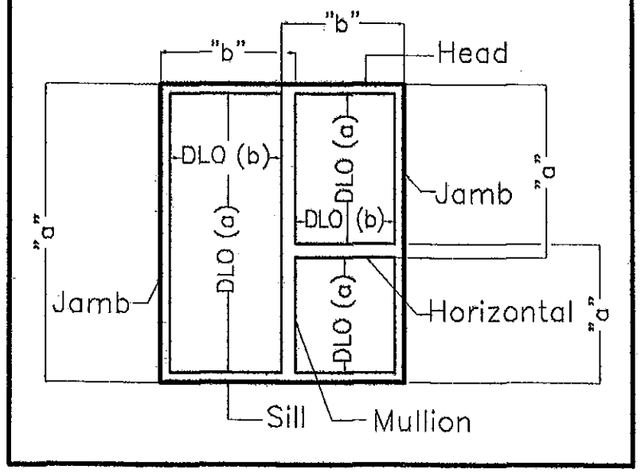

FLORIDA BUILDING CODE (High Velocity Hurricane Zone)

©2011 TILTECO, INC

TILLIT TESTING & ENGINEERING COMPANY
6355 NW 36th St., Ste. 305, VIRGINIA GARDENS, FL 33166
Phone : (305)871-1530 Fax : (305)871-1531
e-mail: tilteco@aol.com
EB-0006719
WALTER A. TILLIT Jr. P.E.
FLORIDA Lic. # 44167

TILTECO INC.

SERIES FG-5000 FLUSH GLAZED ALUMINUM WINDOW WALL SYSTEM LARGE & SMALL MISSILE IMPACT LAMINATED GLASS

Oldcastle BuildingEnvelope™
803 Airport Rd - Terrell, TX 75160
www.OldcastleBE.com - Phone 800-869-4567

REV. No.	DESCRIPTION	DATE	REV. No.	DESCRIPTION	DATE
3	OLD 10-075	12/01/11	3		
2			4		

DRAWN BY: L.G./M.C.V./A.G.

12/01/11 DATE

11-196 DRAWING No

SHEET 6 OF 22

WALTER A. TILLIT JR. LICENSE No. 44167 STATE OF FLORIDA PROFESSIONAL ENGINEER

P.E. SEAL/SIGNATURE/DATE

PRODUCT REVISED as complying with the Florida Building Code
Acceptance No 12-0109.02
Expiration Date Nov. 18, 2014
By Manuel Perez
Miami-Dade Product Control

MIAMI-DADE COUNTY

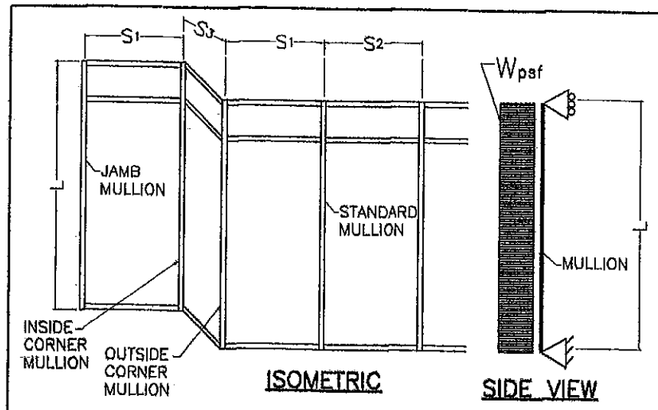

L = MULLION SPAN

EFFECTIVE SPACING $b = \frac{S_1 + S_2}{2}$ (SEE SCHEDULE.)
(FOR STANDARD MULLION)

EFFECTIVE SPACING $b = \frac{S_1 + S_3}{2}$ (SEE SCHEDULE)
(FOR CORNER MULLION)

CASE DEFINITIONS

CASE 1 : UNREINFORCED STANDARD MULLION A (SEE DET. 5/17)

CASE 2 : REINFORCED STANDARD MULLION B FULL HEIGHT. (SEE DET. 5A/17)

CASE 3 : CORNER MULLION C FULL HEIGHT. (SEE DET. 6/17 & 6A/17)
(EITHER INSIDE OR OUTSIDE)

* MAXIMUM A.S.D. DESIGN PRESSURE RATING FOR STANDARD & CORNER MULLION WILL AUTOMATICALLY QUALIFY A.S.D. DESIGN PRESSURE RATINGS FOR JAMBS W/ ANCHORAGE FOR ANY GIVEN MULLION SPACING. FOR MAX. JAMB SPAN W/O ANCHORAGE SEE SCHEDULE ON SHEET 13.
JAMB ANCHORAGE (WHEN USED) SHALL BE PERFORMED AT MID HEIGHT OF JAMBS.

A	CASE:1 STANDARD MULLION (26) + (20)	Ix= 5.580 in4 Sx= 2.227 in3
	AIR/WATER INFILTRATION IS 9.75 psf	IN TERMS OF ALUM.

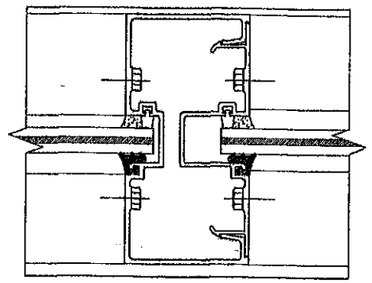

B	CASE:2 STANDARD MULLION (26) + (20) W/ STEEL CHANNEL (16)	Ix= 18.180 in4 Sx= 7.266 in3
	AIR/WATER INFILTRATION IS 15 psf	IN TERMS OF ALUM.

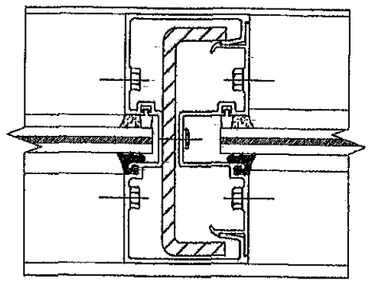

C	CASE:3 OUTSIDE/INSIDE CORNER MULLION (27) + (20)	Ix= 17.141 in4 Sx= 4.336 in3
	AIR/WATER INFILTRATION IS 10.5 psf	IN TERMS OF ALUM.

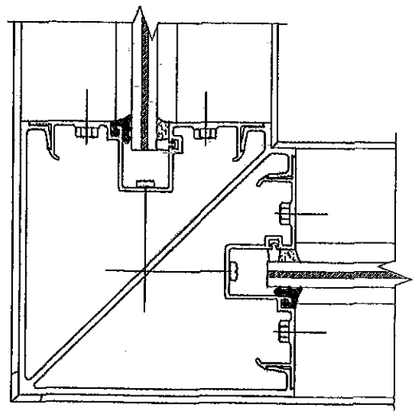

MAXIMUM A.S.D. DESIGN PRESSURE RATING FOR STANDARD & CORNER MULLIONS *

MAXIMUM MULLION SPAN "L"(FT) SCHEDULE FOR A GIVEN A.S.D. DESIGN PRESSURE RATING AND A GIVEN MULLION EFFECTIVE SPACING "b"

MAXIMUM A.S.D.DESIGN PRESSURE RAITING (psf)	EFFECTIVE SPACING "b" (Ft-In)	CASE 1 STANDARD UNREINFORCED MULLION A "L" (Ft-In)	CASE 2 STANDARD REINFORCED MULLION B "L" (Ft-In)	CASE 3 OUT SIDE/INSIDE CORNER MULLION C "L" (Ft-In)
60.0	3'-6"	9'-0"	10'-0"	10'-0"
	4'-0"	9'-10"	10'-0"	10'-0"
	4'-6"	9'-2"	10'-0"	10'-0"
	5'-0"	7'-4"	10'-0"	10'-0"
	5'-6"	6'-8"	10'-0"	10'-0"
	6'-0"	6'-1"	10'-0"	10'-0"
	6'-6"	5'-8"	9'-10"	10'-0"
	7'-0"	5'-3"	9'-6"	9'-8"
	7'-6"	4'-11"	9'-0"	9'-0"
	8'-0"	4'-7"	8'-5"	8'-5"
	8'-2"	4'-5"	8'-3"	8'-3"
65.0	3'-6"	8'-8"	10'-0"	10'-0"
	4'-0"	8'-5"	10'-0"	10'-0"
	4'-6"	8'-1"	10'-0"	10'-0"
	5'-0"	6'-9"	10'-0"	10'-0"
	5'-6"	6'-2"	10'-0"	10'-0"
	6'-0"	5'-8"	10'-0"	10'-0"
	6'-6"	5'-3"	9'-10"	10'-0"
	7'-0"	4'-10"	9'-6"	9'-7"
	7'-6"	4'-6"	9'-0"	9'-0"
	8'-0"	4'-3"	8'-5"	8'-5"
	8'-2"	4'-1"	8'-3"	8'-3"
70.0	3'-6"	- -	10'-0"	10'-0"
	4'-0"	- -	10'-0"	10'-0"
	4'-6"	- -	10'-0"	10'-0"
	5'-0"	- -	10'-0"	10'-0"
	5'-6"	- -	10'-0"	10'-0"
	6'-0"	- -	9'-11"	10'-0"
	6'-6"	- -	9'-6"	9'-8"
	7'-0"	- -	9'-1"	8'-11"
	7'-6"	- -	8'-8"	8'-3"
	8'-0"	- -	7'-9"	7'-9"
	8'-2"	- -	7'-7"	7'-7"
75.0	3'-6"	- -	10'-0"	10'-0"
	4'-0"	- -	10'-0"	10'-0"
	4'-6"	- -	10'-0"	10'-0"
	5'-0"	- -	10'-0"	10'-0"
	5'-6"	- -	9'-7"	9'-10"
	6'-0"	- -	9'-0"	9'-0"
	6'-6"	- -	8'-4"	8'-4"
	7'-0"	- -	7'-9"	7'-9"
	7'-6"	- -	7'-2"	7'-2"
	8'-0"	- -	6'-9"	6'-9"
	8'-2"	- -	6'-7"	6'-7"
76.0	3'-6"	- -	10'-0"	10'-0"
	4'-0"	- -	10'-0"	10'-0"
	4'-6"	- -	10'-0"	10'-0"
	5'-0"	- -	10'-0"	10'-0"
	5'-6"	- -	9'-9"	9'-8"
	6'-0"	- -	9'-0"	8'-11"
	6'-6"	- -	8'-5"	8'-5"
	7'-0"	- -	7'-11"	7'-11"
	7'-6"	- -	7'-4"	7'-4"
	8'-0"	- -	6'-9"	6'-9"
	8'-2"	- -	6'-7"	6'-7"
80.0	3'-6"	- -	10'-0"	10'-0"
	4'-0"	- -	10'-0"	10'-0"
	4'-6"	- -	10'-0"	10'-0"
	5'-0"	- -	10'-0"	10'-0"
	5'-6"	- -	9'-11"	10'-0"
	6'-0"	- -	9'-6"	9'-8"
	6'-6"	- -	8'-11"	8'-11"
	7'-0"	- -	8'-5"	8'-5"
	7'-6"	- -	7'-10"	7'-10"
	8'-0"	- -	7'-4"	7'-4"
	8'-2"	- -	7'-2"	7'-2"
85.0	3'-6"	- -	10'-0"	- -
	4'-0"	- -	10'-0"	- -
	4'-6"	- -	9'-11"	- -
	5'-0"	- -	9'-8"	- -
90.0	3'-6"	- -	10'-0"	- -
	4'-0"	- -	10'-0"	- -
	4'-2"	- -	10'-0"	- -
	4'-6"	- -	9'-4"	- -
	5'-0"	- -	8'-5"	- -

FLORIDA BUILDING CODE (High Velocity Hurricane Zone)

SERIES FG-5000 FLUSH GLAZED ALUMINUM WINDOW WALL SYSTEM LARGE & SMALL MISSILE IMPACT LAMINATED GLASS

Oldcastle BuildingEnvelope™
800 Airport Rd - Terrell, TX 75160
www.OldcastleBE.com - Phone 800-669-4567

REV. No	DESCRIPTION	DATE
3	OLD 10-035	12/01/11
2		

DRAWN BY: L.G./M.C.V./A.G.
12/01/11 DATE
11-196 DRAWING No
SHEET 7 OF 22

©2011 TILTECO, INC

TILTECO INC.
TESTING & ENGINEERING COMPANY
TILLIT TESTING & ENGINEERING COMPANY
6355 N.W. 36th. St., Suite 305, Miami, FL 33166
Phone : (305)887-1551 Fax : (305)871-1551
e-mail: tilteco@bellsouth.com
EB-0006719
WALTER A. TILLIT Jr. P.E.
FLORIDA Lic. # 44167

WALTER A. TILLIT JR. LICENSE No. 44167 STATE OF FLORIDA PROFESSIONAL ENGINEER

P.E. SIGNATURE/DATE

PRODUCT REVISED
as complying with the Florida Building Code
Acceptance No 12-0120.06
Expiration Date Nov. 18, 2014
By Miami-Dade Product Control

MIAMI-DADE COUNTY

MAXIMUM A.S.D. DESIGN PRESSURE RATING FOR MULLION CONNECTIONS (B)

MAXIMUM MULLION SPAN	EFFECTIVE SPACING	MAXIMUM A.S.D. DESIGN PRESSURE RATING (psf)					
		POURED CONCRETE (Min. fc = 3ksi) SUBSTRATE			1/4" Min. THK ASTM A-36 STEEL SUBSTRATE	DOUBLE BUCK 3" Min. THK (G=0.55) WOOD SUBSTRATE	DOUBLE BUCK 3" Min. THK. (G=0.55) WOOD SUBSTRATE
		FASTENERS TYPES			FASTENERS	FASTENERS	FASTENERS
		A	B	C	D	E	E'
"L" (Ft-In)	"b" (Ft-In)	4 anchors	4 anchors	4 anchors	4 Bolts	10 Lag screws	10 Lag screws
6'-2"	3'-0"	90.0	90.0	90.0	90.0	90.0	90.0
	4'-0"	90.0	90.0	90.0	90.0	90.0	90.0
	4'-6"	90.0	90.0	90.0	90.0	90.0	90.0
	5'-0"	90.0	90.0	90.0	90.0	90.0	90.0
	5'-6"	90.0	90.0	90.0	90.0	90.0	90.0
	6'-0"	90.0	90.0	90.0	90.0	90.0	90.0
	6'-6"	90.0	90.0	90.0	90.0	90.0	90.0
	7'-0"	90.0	90.0	90.0	90.0	90.0	90.0
	7'-6"	90.0	90.0	90.0	90.0	90.0	90.0
	8'-0"	90.0	90.0	90.0	90.0	90.0	90.0
6'-6"	3'-0"	90.0	90.0	90.0	90.0	90.0	90.0
	4'-0"	90.0	90.0	90.0	90.0	90.0	90.0
	4'-6"	90.0	90.0	90.0	90.0	90.0	90.0
	5'-0"	90.0	90.0	90.0	90.0	90.0	90.0
	5'-6"	90.0	90.0	90.0	90.0	90.0	90.0
	6'-0"	90.0	90.0	90.0	90.0	90.0	90.0
	6'-6"	90.0	90.0	90.0	90.0	90.0	90.0
	7'-0"	90.0	90.0	90.0	90.0	90.0	90.0
	7'-6"	90.0	90.0	90.0	90.0	90.0	90.0
	8'-0"	90.0	90.0	90.0	90.0	90.0	90.0
7'-0"	3'-0"	90.0	90.0	90.0	90.0	90.0	90.0
	4'-0"	90.0	90.0	90.0	90.0	90.0	90.0
	4'-6"	90.0	90.0	90.0	90.0	90.0	90.0
	5'-0"	90.0	90.0	90.0	90.0	90.0	90.0
	5'-6"	90.0	90.0	90.0	90.0	90.0	90.0
	6'-0"	90.0	90.0	90.0	90.0	90.0	90.0
	6'-6"	90.0	90.0	90.0	90.0	90.0	90.0
	7'-0"	90.0	90.0	90.0	90.0	90.0	90.0
	7'-6"	90.0	90.0	90.0	90.0	90.0	90.0
	8'-0"	90.0	90.0	90.0	90.0	90.0	90.0
7'-6"	3'-0"	90.0	90.0	90.0	90.0	90.0	90.0
	4'-0"	90.0	90.0	90.0	90.0	90.0	90.0
	4'-6"	90.0	90.0	90.0	90.0	90.0	90.0
	5'-0"	90.0	90.0	90.0	90.0	90.0	90.0
	5'-6"	90.0	90.0	90.0	90.0	90.0	90.0
	6'-0"	90.0	90.0	90.0	90.0	90.0	90.0
	6'-6"	90.0	90.0	90.0	90.0	90.0	90.0
	7'-0"	90.0	90.0	90.0	90.0	90.0	90.0
	7'-6"	90.0	90.0	90.0	90.0	90.0	90.0
	8'-0"	90.0	90.0	90.0	90.0	90.0	90.0
8'-0"	3'-0"	90.0	90.0	90.0	90.0	90.0	90.0
	4'-0"	90.0	90.0	90.0	90.0	90.0	90.0
	4'-6"	90.0	90.0	90.0	90.0	90.0	90.0
	5'-0"	90.0	90.0	90.0	90.0	90.0	90.0
	5'-6"	90.0	90.0	90.0	90.0	90.0	90.0
	6'-0"	90.0	90.0	90.0	90.0	90.0	90.0
	6'-6"	90.0	90.0	90.0	90.0	90.0	90.0
	7'-0"	90.0	90.0	90.0	90.0	90.0	90.0
	7'-6"	90.0	90.0	90.0	90.0	90.0	90.0
	8'-0"	90.0	90.0	90.0	90.0	90.0	90.0
8'-6"	3'-0"	90.0	90.0	90.0	90.0	90.0	90.0
	4'-0"	90.0	90.0	90.0	90.0	90.0	90.0
	4'-6"	90.0	90.0	90.0	90.0	90.0	90.0
	5'-0"	90.0	90.0	90.0	90.0	90.0	90.0
	5'-6"	90.0	90.0	90.0	90.0	90.0	90.0
	6'-0"	90.0	90.0	90.0	90.0	90.0	90.0
	6'-6"	90.0	90.0	90.0	90.0	90.0	90.0
	7'-0"	90.0	90.0	90.0	90.0	90.0	90.0
	7'-6"	90.0	90.0	90.0	90.0	90.0	90.0
	8'-0"	90.0	90.0	90.0	90.0	90.0	90.0
9'-0"	3'-0"	90.0	90.0	90.0	90.0	90.0	90.0
	4'-0"	90.0	90.0	90.0	90.0	90.0	90.0
	4'-6"	90.0	90.0	90.0	90.0	90.0	90.0
	5'-0"	90.0	90.0	90.0	90.0	90.0	90.0
	5'-6"	90.0	90.0	90.0	90.0	90.0	90.0
	6'-0"	90.0	90.0	90.0	90.0	90.0	90.0
	6'-6"	90.0	90.0	90.0	90.0	90.0	90.0
	7'-0"	90.0	90.0	90.0	90.0	90.0	90.0
	7'-6"	90.0	90.0	90.0	90.0	90.0	90.0
	8'-0"	90.0	90.0	90.0	90.0	90.0	90.0
9'-6"	3'-0"	90.0	90.0	90.0	90.0	90.0	90.0
	4'-0"	90.0	90.0	90.0	90.0	90.0	90.0
	4'-6"	90.0	90.0	90.0	90.0	90.0	90.0
	5'-0"	90.0	90.0	90.0	90.0	90.0	90.0
	5'-6"	90.0	90.0	90.0	90.0	90.0	90.0
	6'-0"	90.0	90.0	90.0	90.0	90.0	90.0
	6'-6"	90.0	90.0	90.0	90.0	90.0	90.0
	7'-0"	90.0	90.0	90.0	90.0	90.0	90.0
	7'-6"	90.0	90.0	90.0	90.0	90.0	90.0
	8'-0"	90.0	90.0	90.0	90.0	90.0	90.0
10'-0"	3'-0"	90.0	90.0	90.0	90.0	90.0	90.0
	4'-0"	90.0	90.0	90.0	90.0	90.0	90.0
	4'-6"	90.0	90.0	90.0	90.0	90.0	90.0
	5'-0"	90.0	90.0	90.0	90.0	90.0	90.0
	5'-6"	90.0	90.0	90.0	90.0	90.0	90.0
	6'-0"	90.0	90.0	90.0	90.0	90.0	90.0
	6'-6"	90.0	90.0	90.0	90.0	90.0	90.0
	7'-0"	90.0	90.0	90.0	90.0	90.0	90.0
	7'-6"	90.0	90.0	90.0	90.0	90.0	90.0
	8'-0"	90.0	90.0	90.0	90.0	90.0	90.0

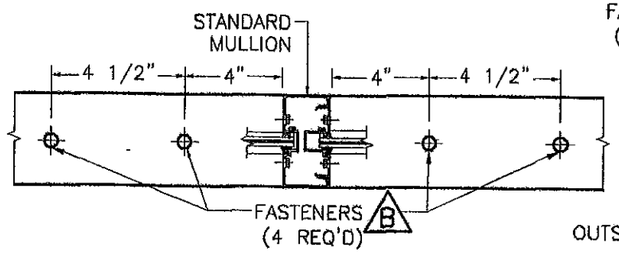

SCHEMATIC CONCRETE & STEEL CONNECTION DETAIL * (AT STANDARD MULLION)

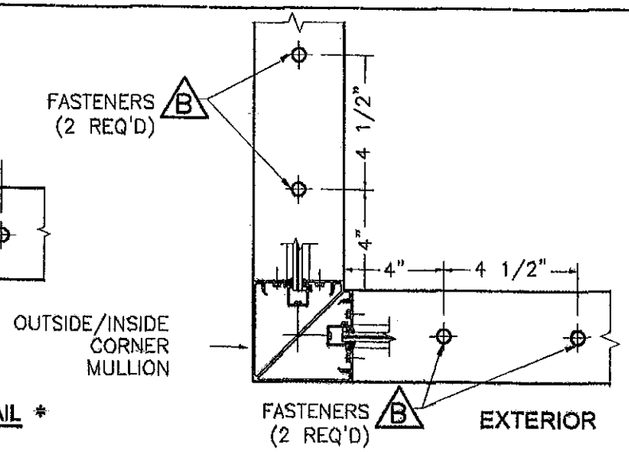

SCHEMATIC CONCRETE & STEEL CONNECTION DETAIL * (AT OUTSIDE/INSIDE CORNER MULLION)

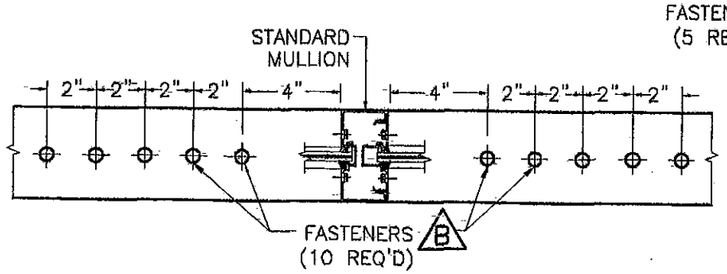

SCHEMATIC WOOD CONNECTION DETAIL * (AT STANDARD MULLION)

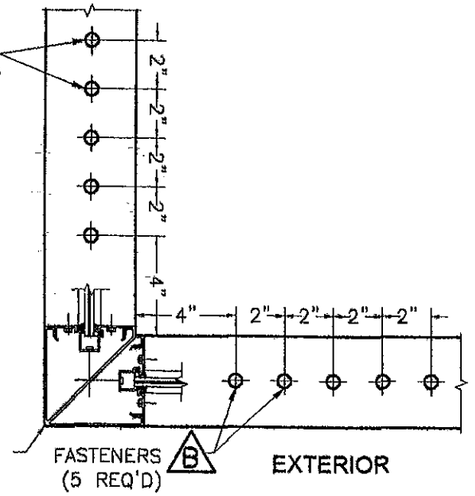

SCHEMATIC WOOD CONNECTION DETAIL * (AT OUTSIDE/INSIDE CORNER MULLION)

(B) FASTENERS TYPES AND SUBSTRATES REQUIREMENTS W/ 4" MIN. E.D., BEYOND ANY FINISH MATERIAL (except as noted)

A - 3/8"Ø HILTI KWIK BOLT TZ ANCHOR W/ 2" Min. EMBEDMENT INTO 6" Min. THICK POURED CONCRETE (Min. f'c = 3 ksi).

B - 3/8"Ø POWER FASTENERS TAPPER ANCHOR W/ 1 3/4" Min. EMBEDMENT INTO POURED CONCRETE (Min. f'c = 3 ksi) & 4 1/2" MIN. EDGE DISTANCE , BEYOND ANY FINISH MATERIAL.

C - 3/8"Ø HILTI HUS-H SCREW ANCHOR W/ 2" Min. EMBEDMENT INTO POURED CONCRETE (Min. f'c = 3 ksi) & 5" MIN. EDGE DISTANCE , BEYOND ANY FINISH MATERIAL.

D - 3/8"Ø TYPE "F" BOLT OR 3/8"Ø -13 SAE GRADE 5 GALVANIZED STEEL HHB THRU BOLT W/ NUT & LOCK WASHER & 2" MIN. EDGE DISTANCE TO 1/4" Min. THK. ASTM A-36 STEEL .

E - 3/8"Ø LAG SCREWS TO DOUBLE 2 x WOOD BUCK (G=0.55) W/ 3" Min. PENETRATION INTO WOOD & 1 1/2" MIN. EDGE DISTANCE , BEYOND ANY FINISH MATERIAL.

E' - 1/2"Ø LAG SCREWS TO DOUBLE 2 x WOOD BUCK (G=0.55) W/ 3" Min. PENETRATION INTO WOOD & 2" MIN. EDGE DISTANCE , BEYOND ANY FINISH MATERIAL.

* SEE CONNECTION DETAILS ON SHEETS 9,10 & 22.

FLORIDA BUILDING CODE (High Velocity Hurricane Zone)

SERIES FG-5000 FLUSH GLAZED ALUMINUM WINDOW WALL SYSTEM LARGE & SMALL MISSILE IMPACT LAMINATED GLASS

DRAWN BY: LS./M.C.V./A.S.

12/01/11 DATE

11-196 DRAWING No.

SHEET 8 OF 22

Oldcastle BuildingEnvelope™
803 Airport Rd - Terrell, TX 75160
www.OldcastleBE.com - Phone 800-869-4567

REV. No.	DESCRIPTION	DATE	REV. No.	DESCRIPTION	DATE
1	OLD 10-015	12/01/11	3		
2			4		

©2011 TILLECO, INC.

TILLIT TESTING & ENGINEERING COMPANY
5355 NW. 36th. St., Ste. 305, Virginia Gardens, FL 33166
Phone : (305)871-1530 . Fax : (305)871-1531
e-mail: tilleco@aol.com
EB-0006719
WALTER A. TILLIT JR. P.E.
FLORIDA Lic. # 44167

PRODUCT REVISED as complying with the Florida Building Code Acceptance No. 12-0103.06 Expiration Date Nov. 16, 2014
By Miami-Dade Product Control

WALTER A. TILLIT JR. LICENSE NO. 44167 STATE OF FLORIDA PROFESSIONAL ENGINEER

P.E. SEAL/SIGNATURE/DATE

MIAMI-DADE COUNTY

MAXIMUM A.S.D. DESIGN PRESSURE RATING FOR MULLION CONNECTIONS (B) CONTINUED

MAXIMUM MULLION SPAN "L" (Ft-in)	EFFECTIVE SPACING "b" (Ft-in)	MAXIMUM A.S.D. DESIGN PRESSURE RATING (psf) POURED CONCRETE (Min. f'c = 3ksi) SUBSTRATE F 4 anchors	G 4 anchors	H 4 anchors	GROUT FILLED CONCRETE BLOCK SUBSTRATE G' 6 anchors	H' 6 anchors	12 GAGE (0.108" Min. THK) Fy=33 ksi STEEL SUBSTRATE I 4 Bolts
6'-2"	3'-6"	90.0	90.0	90.0	90.0	90.0	90.0
	4'-0"	90.0	90.0	90.0	90.0	90.0	90.0
	4'-6"	90.0	90.0	90.0	90.0	90.0	90.0
	5'-0"	90.0	90.0	90.0	87.6	90.0	90.0
	5'-6"	90.0	90.0	90.0	79.6	90.0	90.0
	6'-0"	90.0	90.0	90.0	73.0	90.0	90.0
	6'-6"	90.0	90.0	90.0	67.4	90.0	90.0
	7'-0"	90.0	83.8	90.0	62.5	90.0	90.0
	7'-6"	90.0	78.3	90.0	58.4	90.0	90.0
	8'-0"	86.9	73.4	88.7	54.7	90.0	90.0
	8'-2"	84.7	71.6	86.5	53.3	90.0	90.0
6'-6"	3'-6"	90.0	90.0	90.0	90.0	90.0	90.0
	4'-0"	90.0	90.0	90.0	90.0	90.0	90.0
	4'-6"	90.0	90.0	90.0	90.0	90.0	90.0
	5'-0"	90.0	90.0	90.0	83.1	90.0	90.0
	5'-6"	90.0	90.0	90.0	75.5	90.0	90.0
	6'-0"	90.0	90.0	90.0	69.2	90.0	90.0
	6'-6"	90.0	85.7	90.0	63.9	90.0	90.0
	7'-0"	90.0	79.8	90.0	59.3	90.0	90.0
	7'-6"	87.9	74.2	89.8	55.4	90.0	90.0
	8'-0"	82.4	69.6	84.2	51.9	90.0	90.0
	8'-2"	80.3	67.8	82.0	50.6	90.0	90.0
7'-0"	3'-6"	90.0	90.0	90.0	90.0	90.0	90.0
	4'-0"	90.0	90.0	90.0	90.0	90.0	90.0
	4'-6"	90.0	90.0	90.0	86.7	90.0	90.0
	5'-0"	90.0	90.0	90.0	77.1	90.0	90.0
	5'-6"	90.0	90.0	90.0	70.1	90.0	90.0
	6'-0"	90.0	86.2	90.0	64.3	90.0	90.0
	6'-6"	90.0	79.5	90.0	59.3	90.0	90.0
	7'-0"	87.5	73.9	89.3	55.1	90.0	90.0
	7'-6"	81.6	68.9	83.4	51.4	90.0	90.0
	8'-0"	76.5	64.6	78.1	48.2	90.0	90.0
	8'-2"	74.6	63.0	76.2	47.0	87.7	90.0
7'-6"	3'-6"	90.0	90.0	90.0	90.0	90.0	90.0
	4'-0"	90.0	90.0	90.0	90.0	90.0	90.0
	4'-6"	90.0	90.0	90.0	80.0	90.0	90.0
	5'-0"	90.0	90.0	90.0	72.0	90.0	90.0
	5'-6"	90.0	87.7	90.0	65.5	90.0	90.0
	6'-0"	90.0	80.4	90.0	60.0	90.0	90.0
	6'-6"	87.9	74.2	89.8	55.4	90.0	90.0
	7'-0"	81.6	68.9	83.4	51.4	90.0	90.0
	7'-6"	76.2	64.3	77.8	48.0	89.6	90.0
	8'-0"	71.4	60.3	72.9	45.0	84.0	90.0
	8'-2"	69.6	58.8	71.1	43.8	81.8	90.0
8'-0"	3'-6"	90.0	90.0	90.0	90.0	90.0	90.0
	4'-0"	90.0	90.0	90.0	84.4	90.0	90.0
	4'-6"	90.0	90.0	90.0	75.0	90.0	90.0
	5'-0"	90.0	90.0	90.0	67.5	90.0	90.0
	5'-6"	90.0	82.3	90.0	61.4	90.0	90.0
	6'-0"	89.3	75.4	90.0	56.3	90.0	90.0
	6'-6"	82.4	69.6	84.2	51.9	90.0	90.0
	7'-0"	76.5	64.6	78.1	48.2	90.0	90.0
	7'-6"	71.4	60.3	72.9	45.0	84.0	90.0
	8'-0"	67.0	56.6	68.4	42.2	78.8	90.0
	8'-2"	65.3	55.1	66.6	41.1	76.8	90.0
8'-6"	3'-6"	90.0	90.0	90.0	90.0	90.0	90.0
	4'-0"	90.0	90.0	90.0	79.4	90.0	90.0
	4'-6"	90.0	90.0	90.0	70.6	90.0	90.0
	5'-0"	90.0	86.2	90.0	63.5	90.0	90.0
	5'-6"	90.0	77.4	90.0	57.8	90.0	90.0
	6'-0"	84.0	71.0	85.8	52.9	90.0	90.0
	6'-6"	77.6	65.5	79.2	48.9	90.0	90.0
	7'-0"	72.0	60.8	73.6	45.4	84.7	90.0
	7'-6"	67.2	56.8	68.6	42.4	79.1	90.0
	8'-0"	63.0	53.2	64.4	39.7	74.1	88.3
	8'-2"	61.4	51.9	62.7	38.7	72.2	86.0
9'-0"	3'-6"	90.0	90.0	90.0	85.7	90.0	90.0
	4'-0"	90.0	90.0	90.0	75.0	90.0	90.0
	4'-6"	90.0	89.4	90.0	66.7	90.0	90.0
	5'-0"	90.0	80.4	90.0	60.0	90.0	90.0
	5'-6"	86.6	73.1	88.4	54.5	90.0	90.0
	6'-0"	79.4	67.0	81.0	50.0	90.0	90.0
	6'-6"	73.3	61.9	74.8	46.2	86.2	90.0
	7'-0"	68.0	57.4	69.5	42.9	80.0	90.0
	7'-6"	63.5	53.6	64.8	40.0	74.7	88.9
	8'-0"	59.5	50.3	60.8	37.5	70.0	83.4
	8'-2"	58.0	49.0	59.2	36.5	68.2	81.3
9'-6"	3'-6"	90.0	90.0	90.0	81.2	90.0	90.0
	4'-0"	90.0	90.0	90.0	71.1	90.0	90.0
	4'-6"	90.0	84.7	90.0	63.2	90.0	90.0
	5'-0"	90.0	76.2	90.0	56.8	90.0	90.0
	5'-6"	82.0	69.3	83.8	51.7	90.0	90.0
	6'-0"	75.2	63.5	76.8	47.4	88.4	90.0
	6'-6"	69.4	58.6	70.9	43.7	81.6	90.0
	7'-0"	64.4	54.4	65.8	40.6	75.8	90.0
	7'-6"	60.1	50.8	61.4	37.9	70.7	84.2
	8'-0"	56.4	47.6	57.6	35.5	66.3	79.0
	8'-2"	55.0	46.4	56.1	34.6	64.6	77.0
10'-0"	3'-6"	90.0	90.0	90.0	77.1	90.0	90.0
	4'-0"	90.0	90.0	90.0	67.5	90.0	90.0
	4'-6"	90.0	80.4	90.0	60.0	90.0	90.0
	5'-0"	85.7	72.4	87.5	54.0	90.0	90.0
	5'-6"	77.9	65.8	79.6	49.1	90.0	90.0
	6'-0"	71.4	60.3	72.9	45.0	84.0	90.0
	6'-6"	65.9	55.7	67.3	41.5	77.5	90.0
	7'-0"	61.2	51.7	62.5	38.6	72.0	85.8
	7'-6"	57.1	48.3	58.4	36.0	67.2	80.0
	8'-0"	53.6	45.2	54.7	33.8	63.0	75.0
	8'-2"	52.2	44.1	53.3	32.9	61.4	73.1

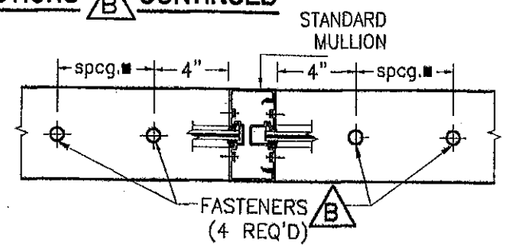

SCHEMATIC CONCONCRETE & 12 GAGE STEEL CONNECTION DETAIL * (AT STANDARD MULLION)

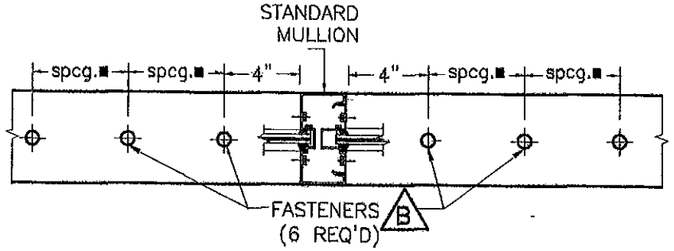

SCHEMATIC GROUT-FILLED CONCRETE BLOCK CONNECTION DETAIL * (AT STANDARD MULLION)

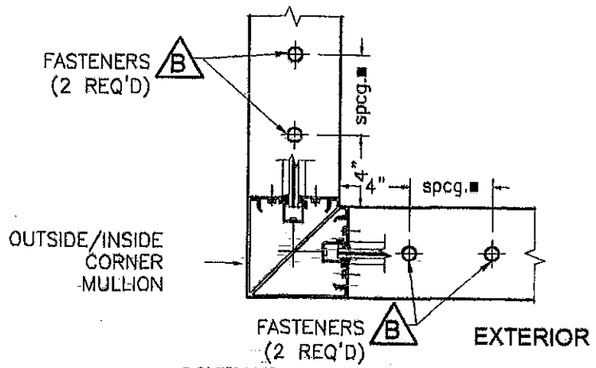

SCHEMATIC CONCRETE & 12 GAGE STEEL CONNECTION DETAIL * (AT OUTSIDE/INSIDE CORNER MULLION)

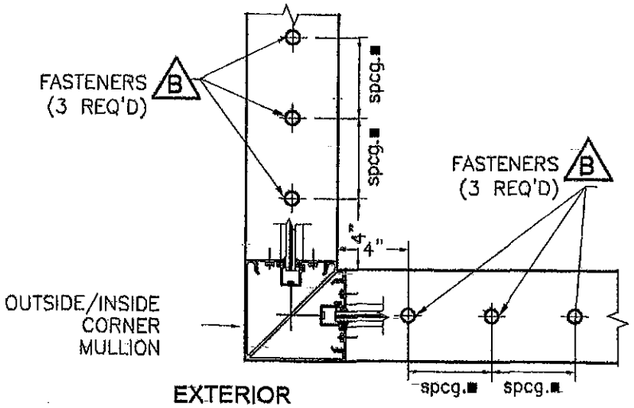

SCHEMATIC GROUT-FILLED CONCRETE BLOCK CONNECTION DETAIL * (AT OUTSIDE/INSIDE CORNER MULLION)

■ MIN. SPACING (spcg.) REQUIRED FOR DIFFERENT SUBSTRATES

-POURED CONCRETE:	4 1/2" MIN. O.C.
-GROUT FILLED C.B.:	8" MIN. O.C.
-STEEL:	4 1/2" MIN. O.C.

* SEE CONNECTION DETAILS ON SHEETS 9,10 & 22.

(B) FASTENERS TYPES AND SUBSTRATES REQUIREMENTS W/ 2 3/4" MIN. E.D., BEYOND ANY FINISH MATERIAL (except as noted)

F - 3/8"Ø HILTI KWIK BOLT TZ ANCHOR W/ 2" Min. EMBEDMENT INTO 6" Min. THICK POURED CONCRETE (Min. f'c = 3 ksi).

G - 3/8"Ø POWER FASTENERS TAPPER ANCHOR W/ 1 3/4" Min. EMBEDMENT INTO POURED CONCRETE (Min. f'c = 3 ksi).

H - 3/8"Ø HILTI HUS-H SCREW ANCHOR W/ 2" Min. EMBEDMENT INTO POURED CONCRETE (Min. f'c = 3 ksi).

G' - 3/8"Ø POWER FASTENERS TAPPER ANCHOR W/ 1 3/4" Min. EMBEDMENT INTO GROUT FILLED CONCRETE BLOCK.

H' - 3/8"Ø HILTI HUS-H SCREW ANCHOR W/ 2 3/4" Min. EMBEDMENT INTO GROUT FILLED CONCRETE BLOCK.

I - 3/8"Ø TYPE "F" BOLT OR 3/8"Ø -13 SAE GRADE 5 GALVANIZED STEEL HHB THRU BOLT W/ NUT & LOCK WASHER & 2" MIN. EDGE DISTANCE TO 12 GAGE (0.108" MIN THK.) Fy=33 ksi STEEL .

FLORIDA BUILDING CODE (High Velocity Hurricane Zone)

SERIES FG-5000 FLUSH GLAZED ALUMINUM WINDOW WALL SYSTEM LARGE & SMALL MISSILE IMPACT LAMINATED GLASS

DRAWN BY: L.G./M.C.V./A.G.

12/01/11 DATE

11-196 DRAWING No

SHEET 8A OF 22

REV. No.	DESCRIPTION	DATE	REV. No.	DESCRIPTION	DATE
1	O.D. 10-035	12/02/11	3		
2			4		

Oldcastle BuildingEnvelope™
803 Airport Rd - Terrell, TX 75160
www.OldcastleBE.com - Phone 800-869-4567

©2011 TILTECO, INC

TILLIT TESTING & ENGINEERING COMPANY
8355 N.W. 35th. St., Ste. 395, MIAMI GARDENS, FL 33166
Phone : (305)871-1530 , Fax : (305)871-1531
e-mail: tilteco@aol.com
EB-0006719
WALTER A. TILLIT Jr. P.E.
FLORIDA Lic. # 44167

WALTER A. TILLIT JR. LICENSE NO. 44167 STATE OF FLORIDA PROFESSIONAL ENGINEER

P.E. SEAL AND SIGNATURE/DATE

PRODUCT REVISED as complying with the Florida Building Code Acceptance No 12-1109.06 Expiration Date Nov. 18, 2014

By Miami Dade Product Control

MIAMI-DADE COUNTY

SILL AND HEAD CONNECTION DETAILS FOR STANDARD MULLIONS AND JAMBS (PLAN VIEWS)

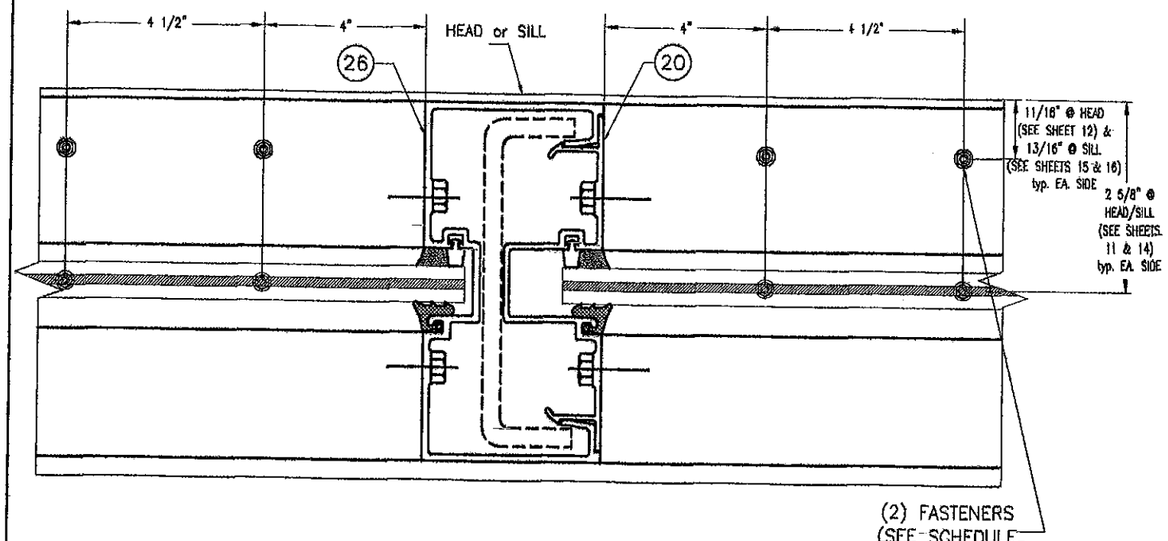

7
CONNECTION AT STANDARD MULLION

CONNECTION DETAIL APPLICABLE TO POURED CONCRETE OR STEEL

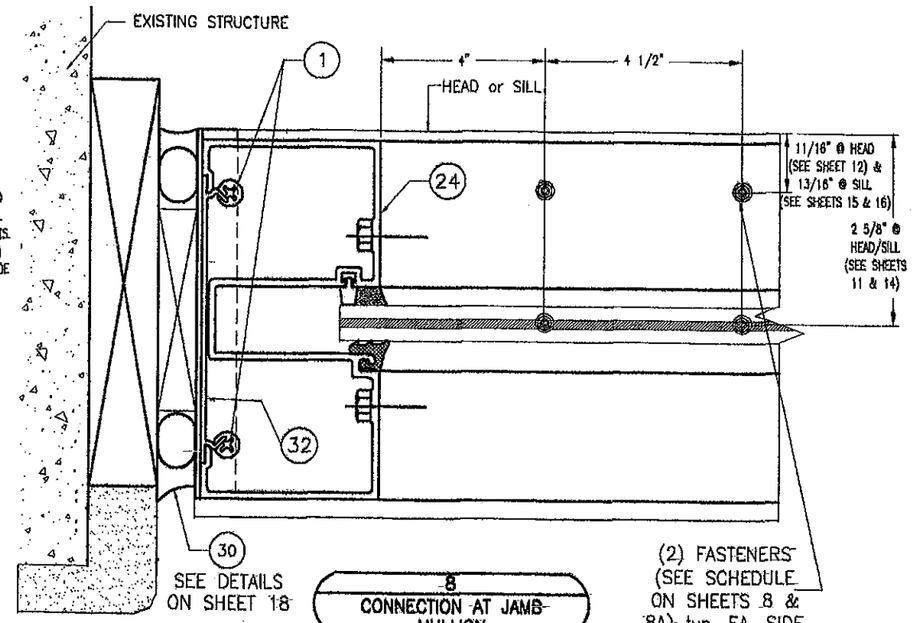

8
CONNECTION AT JAMB MULLION

CONNECTION DETAIL APPLICABLE TO POURED CONCRETE OR STEEL (SIMILAR)

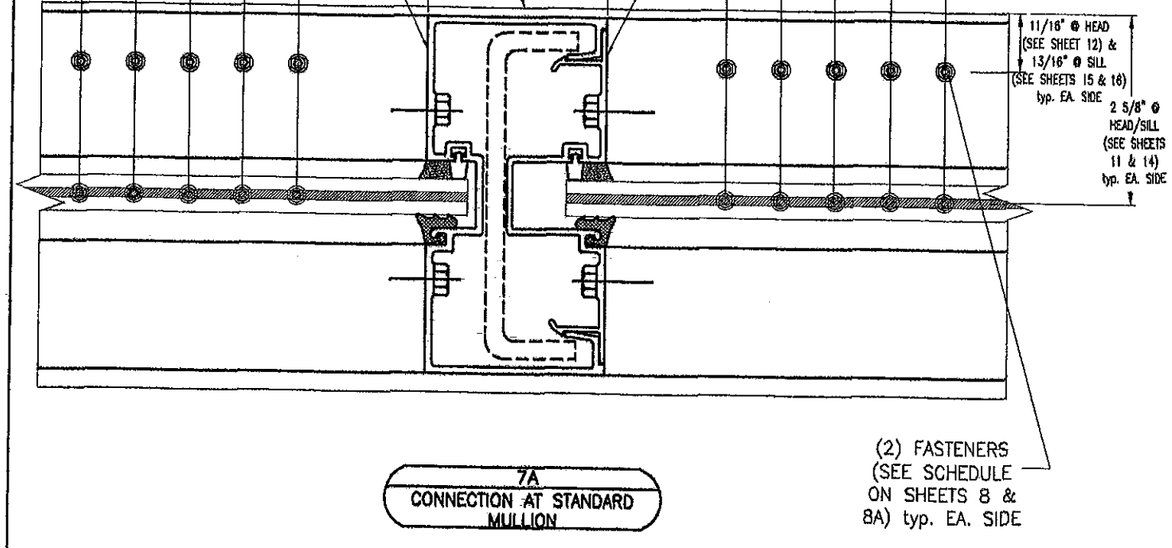

7A
CONNECTION AT STANDARD MULLION

CONNECTION DETAIL APPLICABLE TO WOOD ONLY

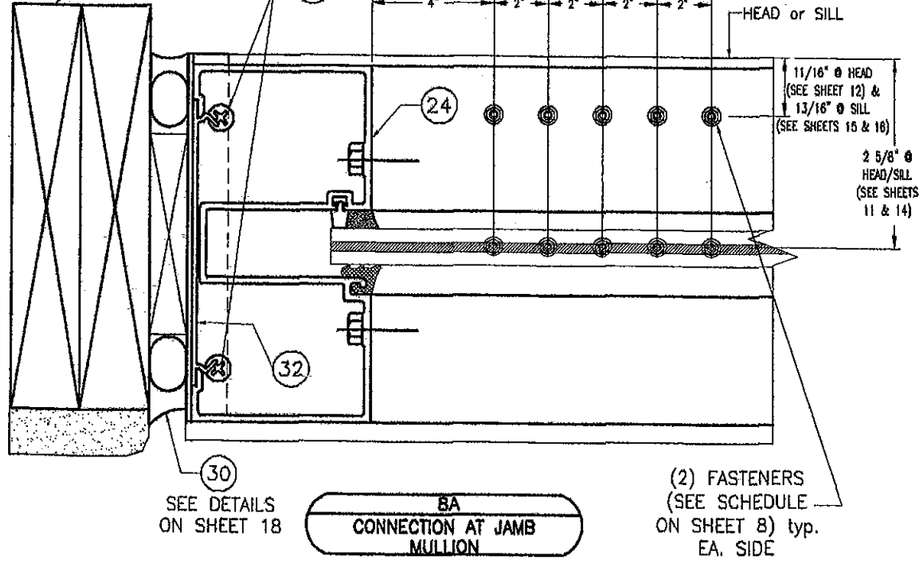

8A
CONNECTION AT JAMB MULLION

CONNECTION DETAIL APPLICABLE TO WOOD ONLY

FLORIDA BUILDING CODE (High Velocity Hurricane Zone)

SERIES FG-5000 FLUSH GLAZED ALUMINUM WINDOW WALL SYSTEM LARGE & SMALL MISSILE IMPACT LAMINATED GLASS

DRAWN BY: L.G./M.C.V./A.G.

12/01/11 DATE

11-196 DRAWING No

SHEET 9 OF 22

Oldcastle BuildingEnvelope™
803 Airport Rd - Terrell, TX 75160
www.OldcastleBE.com - Phone 800-869-4567

DES. No.	DESCRIPTION	DATE
1	OLD 10-076	12/01/11
2		
3		
4		

©2011 TILTECO, INC

TILLIT TESTING & ENGINEERING COMPANY
6355 N.W. 36th. St., Ste. 305, VIRGINIA GARDENS, FL 33166
Phone : (305)871-1530 - Fax : (305)871-1531
e-mail: tilteco@aol.com
EB-0006719
WALTER A. TILLIT Jr. P.E.
FLORIDA Lic. # 44167

WALTER A. TILLIT JR. LICENSE No. 44167 STATE OF FLORIDA PROFESSIONAL ENGINEER

P.E. SEAL/SIGNATURE/DATE

PRODUCT REVISED as complying with the Florida Building Code
Acceptance No. 12-0109.06
Expiration Date Nov. 18, 2014
By Miami Dade Product Control

MIAMI-DADE COUNTY

SILL AND HEAD CONNECTION DETAILS FOR CORNER MULLIONS (PLAN VIEWS)

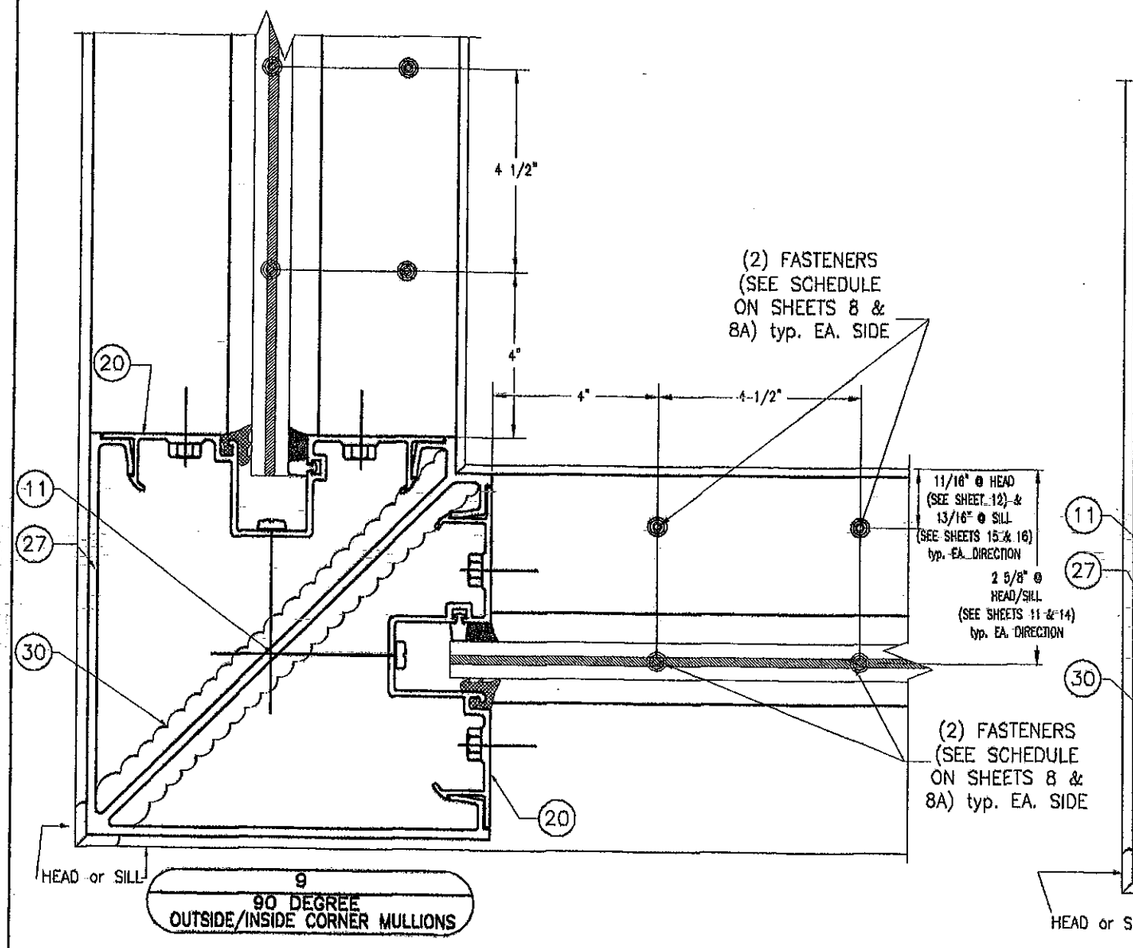

CONNECTION DETAIL APPLICABLE TO POURED CONCRETE, GROUT FILLED CONCRETE BLOCK OR STEEL

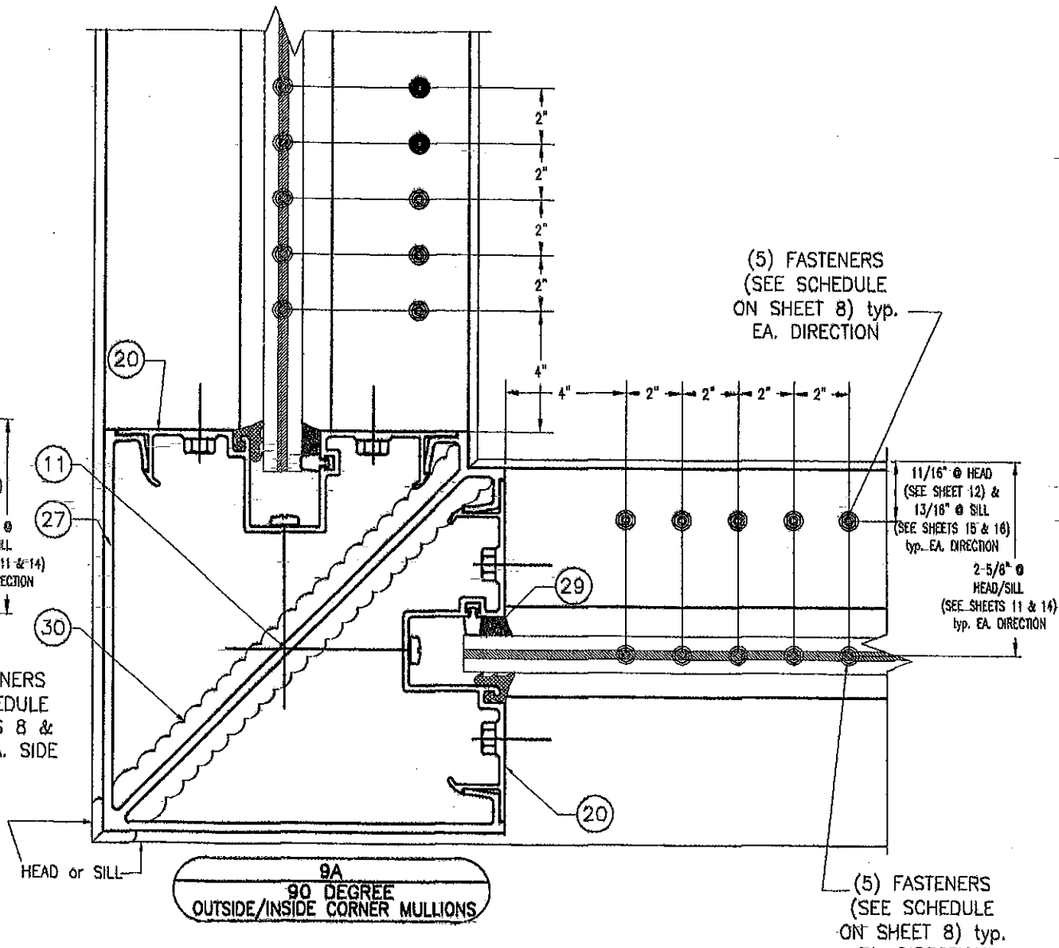

CONNECTION DETAIL APPLICABLE TO WOOD ONLY

FLORIDA BUILDING CODE (High Velocity Hurricane Zone)

SERIES FG-5000 FLUSH GLAZED ALUMINUM WINDOW WALL SYSTEM LARGE & SMALL MISSILE IMPACT LAMINATED GLASS

Oldcastle BuildingEnvelope™
803 Airport Rd - Terrell, TX 75160
www.OldcastleBE.com - Phone 800-869-4567

DRAWN BY:	12/01/11 DATE	11-196 DRAWING No	SHEET 10 OF 22
L.G./M.C.V./A.G.			

REV. No.	DESCRIPTION	DATE
1	OLD 10-075	12/01/11
2	REV. No. 3	
	REV. No. 4	

©2011 TILTECO, INC

TILLIT TESTING & ENGINEERING COMPANY
6355 N.W. 36th. St., Ste. 305, VIRGINIA GARDENS, FL 33166
Phone : (305)871-1530 Fax : (305)871-1531
e-mail: tilteco@aol.com
EB-0005719
WALTER A. TILLIT Jr. P.E.
FLORIDA Lic. # 44167

WALTER A. TILLIT JR. LICENSE No. 44167 STATE OF FLORIDA PROFESSIONAL ENGINEER

SIGNATURE/DATE

P.E.

PRODUCT REVISED as complying with the Florida Building Code Acceptance No. 12-0109.06 Expiration Date Jan 13, 2014
By Miami-Dade Product Control

MIAMI-DADE COUNTY

HEAD CONNECTION DETAILS (SIDE VIEW)

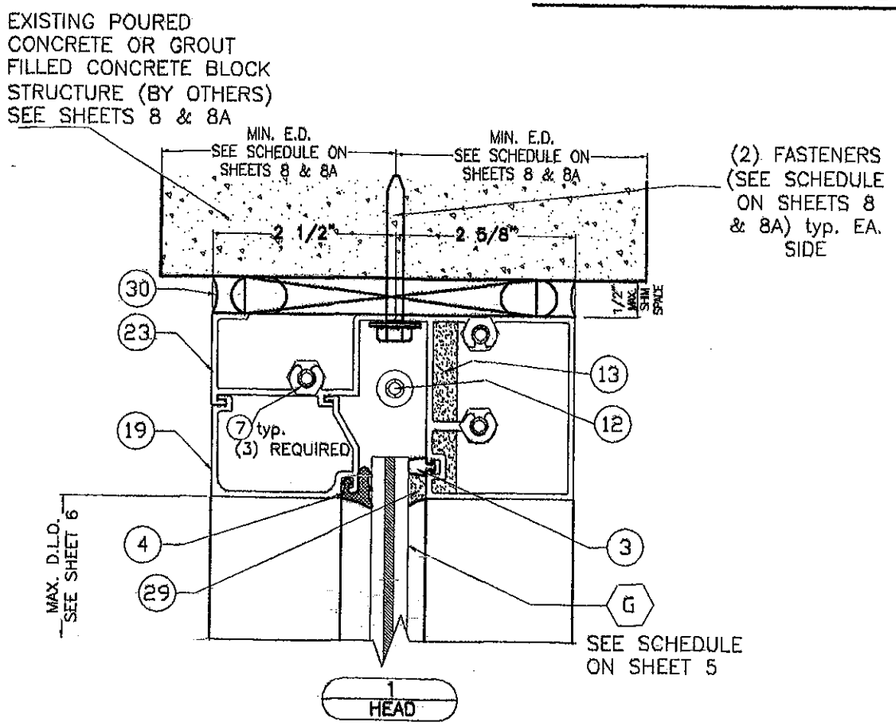

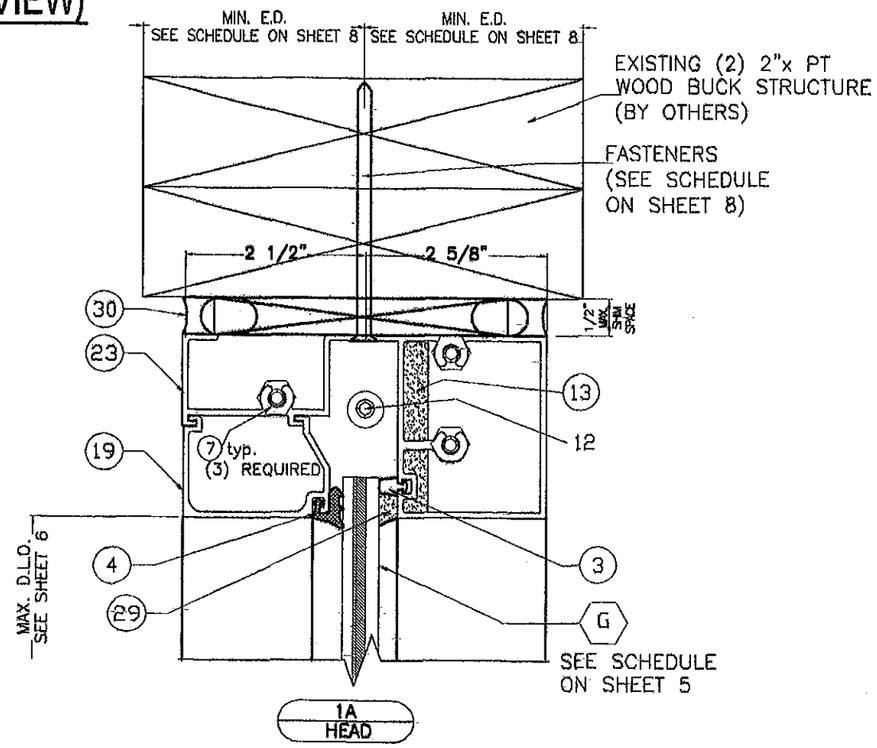

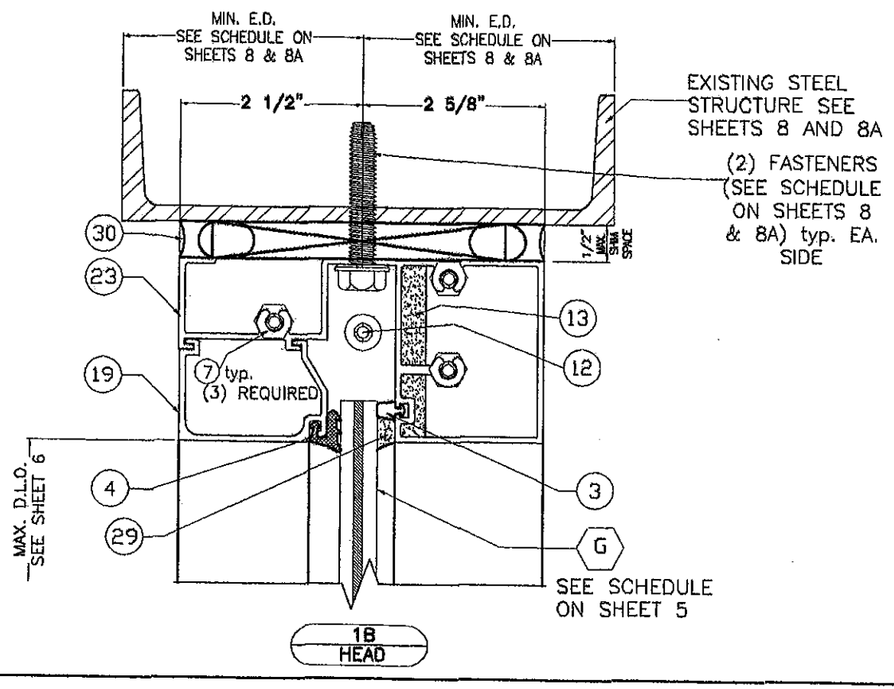

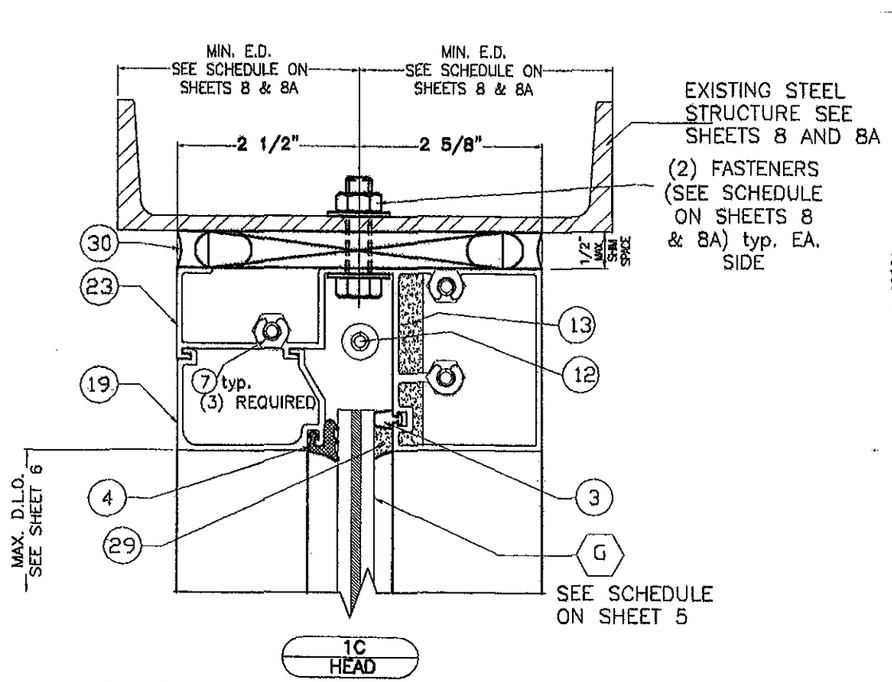

FLORIDA BUILDING CODE (High Velocity Hurricane Zone)

©2011 TILLECO, INC

TILLECO INC.
TILLIT TESTING & ENGINEERING COMPANY
5355 N.W. 36th. St., Ste. 305, VIRGINIA GARDENS, FL 33166
Phone : (305)871-1530 Fax : (305)871-1531
e-mail: tilleco@bdi.com
EB-0006719
WALTER A. TILLIT Jr. P.E.
FLORIDA Lic. # 44167

SERIES FG-5000 FLUSH GLAZED
ALUMINUM WINDOW WALL SYSTEM
LARGE & SMALL MISSILE IMPACT LAMINATED GLASS

Oldcastle BuildingEnvelope™
803 Airport Rd - Terrell, TX 75160
www.OldcastleBE.com - Phone 800-869-4567

REV. No	DESCRIPTION	DATE
1	CLD 10-675	12/01/11
2		
3		
4		

DRAWN BY: L.S./M.C.V./A.S.
12/01/11 DATE
11-196 DRAWING No
SHEET 11 OF 22

WALTER A. TILLIT JR. LICENSE No. 44167 STATE OF FLORIDA PROFESSIONAL ENGINEER
P.E. Seal/Signature/Date

PRODUCT REVISED
as complying with the Florida
Building Code
Acceptance No 12-0109.06
Expiration Date Nov 13, 2014
By
Miami-Dade Product Control

MIAMI-DADE COUNTY

HEAD CONNECTION DETAILS (SIDE VIEW)
(Continued)

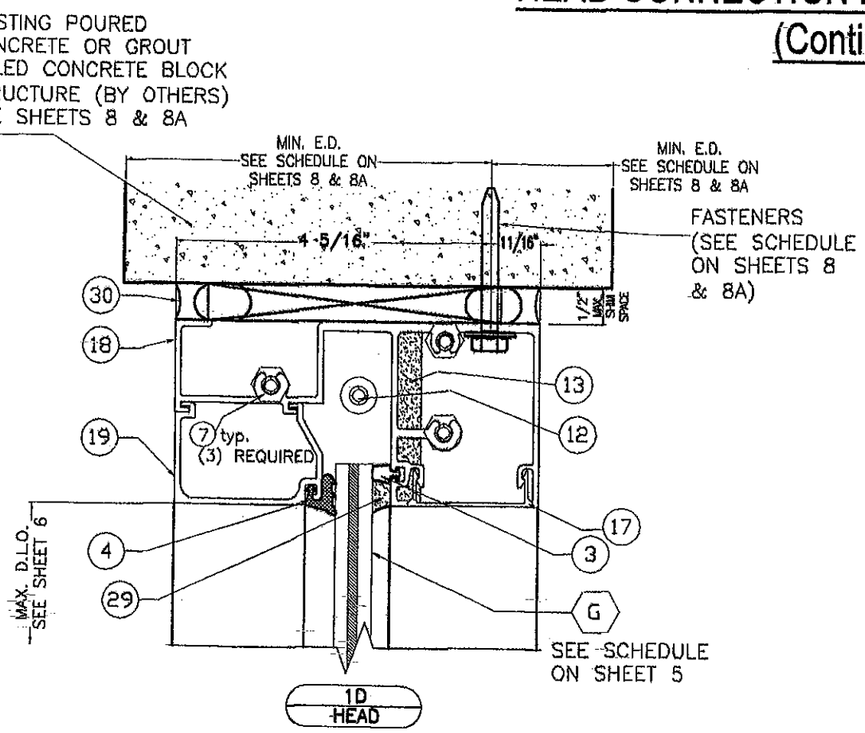

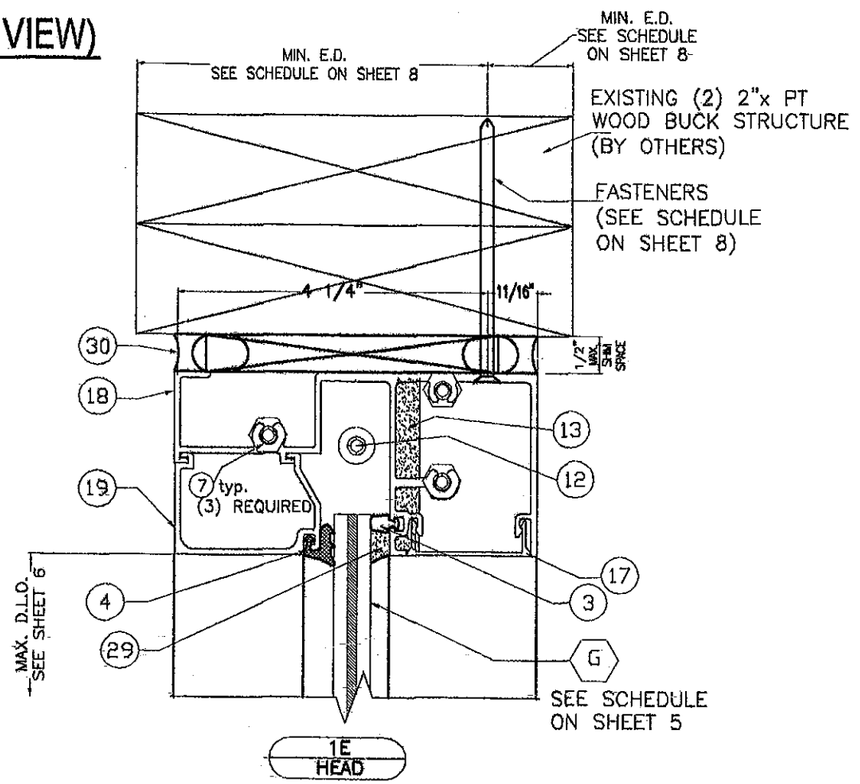

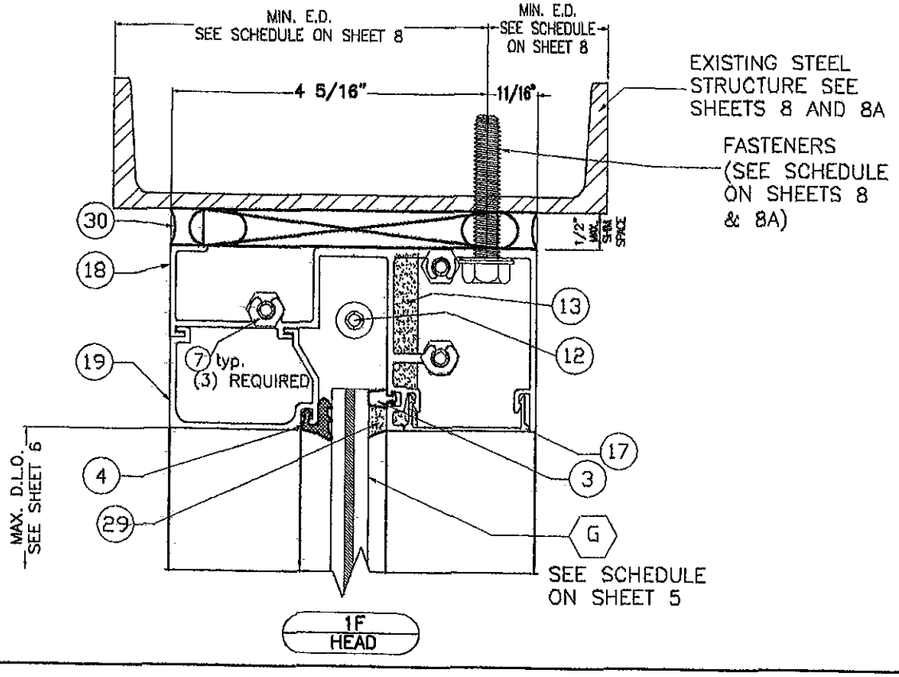

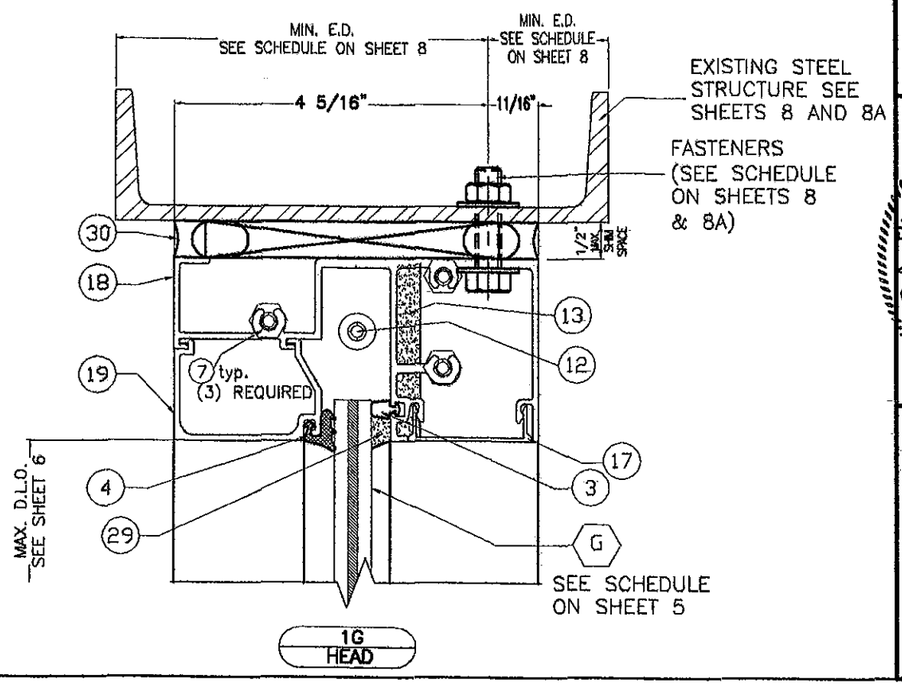

FLORIDA BUILDING CODE (High Velocity Hurricane Zone)

SERIES FG-5000 FLUSH GLAZED ALUMINUM WINDOW WALL SYSTEM
LARGE & SMALL MISSILE IMPACT LAMINATED GLASS

Oldcastle BuildingEnvelope™
803 Airport Rd - Terrell, TX 75160
www.OldcastleBE.com - Phone 800-869-4567

REV. No.	DESCRIPTION	DATE	REV. No.	DESCRIPTION	DATE
1	OLD 10-076	12/01/11	3		
2			4		

DRAWN BY: L.G./M.C.V./A.G.
12/01/11 DATE
11-196 DRAWING No
SHEET 12 OF 22

©2011 TILTECO, INC

TILTECO INC.
TILLIT TESTING & ENGINEERING COMPANY
6355 N.W. 38th St., Ste. 305, VIRGINIA GARDENS, FL 33166
Phone: (305)871-1530 - Fax: (305)871-1531
e-mail: tilteco@aol.com
EB-0006719
WALTER A. TILLIT Jr. P.E.
FLORIDA Lic. # 44167

WALTER A. TILLIT JR. LICENSE No. 44167 STATE OF FLORIDA PROFESSIONAL ENGINEER

P.E. SEAL/SIGNATURE/DATE

PRODUCT REVISED as complying with the Florida Building Code
Acceptance No 12-0109.06
Expiration Date Nov. 18, 2014
By Manuel Perez
Miami-Dade Product Control

MIAMI-DADE COUNTY

HORIZONTAL CONNECTION DETAIL
(SIDE VIEW)

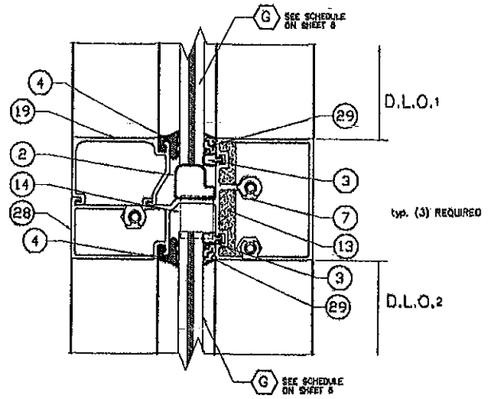

2 HORIZONTAL

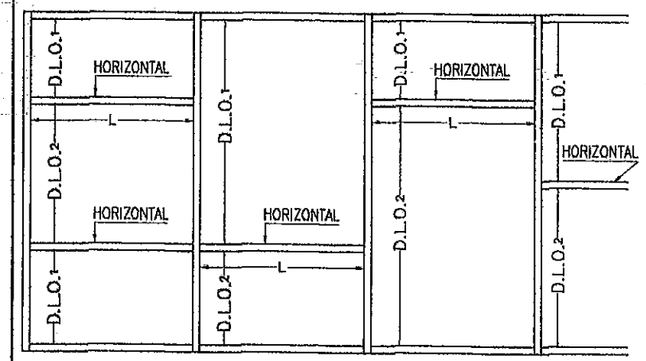

WINDOW WALL ELEVATION W/ HORIZONTAL

"L" = MAXIMUM HORIZONTAL SPAN

"D.L.O." = EFFECTIVE DAY LIGHT OPENING FOR HORIZONTAL = $\frac{D.L.O._1 + D.L.O._2}{2}$

MAXIMUM A.S.D. DESIGN PRESSURE RATING FOR HORIZONTAL

MAXIMUM HORIZONTAL SPAN "L" (ft) SCHEDULE
FOR A GIVEN A.S.D. DESIGN PRESSURE RATING (psf) AND
A GIVEN HORIZONTAL EFFECTIVE DAY LIGHT OPENING "D.L.O." (ft-in)

MAXIMUM A.S.D. DESIGN PRESSURE RATING (psf)	EFFECTIVE DAY LIGHT OPENING "DLO" (ft-in)	MAXIMUM HORIZONTAL SPAN "L" (ft)
± 60.0 OR LESS	2'-0"	8'-0"
	2'-6"	8'-0"
	3'-0"	8'-0"
	3'-6"	8'-0"
	4'-0"	7'-5"
	4'-6"	6'-7"
	5'-0"	5'-11"
± 65.0	2'-0"	8'-0"
	2'-6"	8'-0"
	3'-0"	8'-0"
	3'-6"	7'-10"
	4'-0"	6'-10"
	4'-6"	6'-1"
	5'-0"	5'-5"
± 70.0	2'-0"	8'-0"
	2'-6"	8'-0"
	3'-0"	8'-0"
	3'-6"	7'-3"
	4'-0"	6'-4"
	4'-6"	5'-8"
	5'-0"	5'-1"
± 75.0	2'-0"	8'-0"
	2'-6"	8'-0"
	3'-0"	7'-11"
	3'-6"	6'-9"
	4'-0"	5'-11"
	4'-6"	5'-3"
	5'-0"	4'-9"
± 80.0	2'-0"	8'-0"
	2'-6"	8'-0"
	3'-0"	7'-5"
	3'-6"	6'-4"
	4'-0"	5'-7"
	4'-6"	4'-11"
	5'-0"	4'-5"

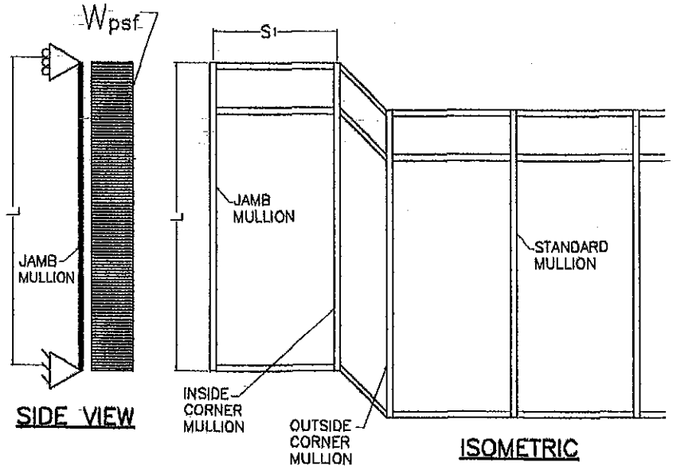

L = JAMB SPAN

EFFECTIVE SPACING (FOR FREESTANDING JAMB MULLION) $b = \frac{S_1}{2}$ (SEE SCHEDULE)

AT JAMB MULLION GLASS PANEL

JAMB W/O ANCHORAGE
(ELEVATION)

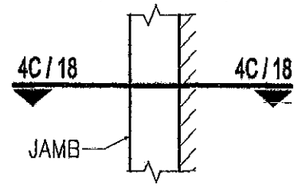

MAXIMUM A.S.D. DESIGN PRESSURE RATING FOR JAMBS W/O ANCHORAGE

MAXIMUM JAMB SPAN "L"(ft) SCHEDULE
FOR A GIVEN A.S.D. DESIGN PRESSURE RATING (psf)
AND A GIVEN JAMB EFFECTIVE SPACING "b" (ft-in)

MAXIMUM A.S.D.DESIGN PRESSURE RATING (psf)	EFFECTIVE SPACING "b" (ft-in)	JAMB W/O CONNECTION SPAN LF (ft-in)
60.0	1'-0"	9'-0"
	2'-0"	9'-0"
	2'-3"	9'-0"
	2'-6"	9'-0"
	2'-9"	8'-8"
	3'-0"	8'-8"
	3'-3"	8'-8"
	3'-6"	7'-7"
	3'-9"	7'-7"
	4'-0"	7'-7"
	4'-1"	7'-7"
65.0	1'-0"	9'-0"
	2'-0"	9'-0"
	2'-3"	9'-0"
	2'-6"	8'-8"
	2'-9"	8'-8"
	3'-0"	8'-8"
	3'-3"	7'-7"
	3'-6"	7'-7"
	3'-9"	7'-7"
	4'-0"	6'-11"
	4'-1"	6'-10"
70.0	1'-0"	9'-0"
	2'-0"	9'-0"
	2'-3"	8'-11"
	2'-6"	8'-8"
	2'-9"	8'-8"
	3'-0"	7'-7"
	3'-3"	7'-7"
	3'-6"	7'-7"
	3'-9"	6'-11"
	4'-0"	6'-8"
	4'-1"	6'-7"
75.0	1'-0"	9'-0"
	2'-0"	9'-0"
	2'-3"	8'-8"
	2'-6"	8'-8"
	2'-9"	7'-7"
	3'-0"	7'-7"
	3'-3"	7'-7"
	3'-6"	6'-11"
	3'-9"	6'-6"
	4'-0"	6'-6"
	4'-1"	6'-4"
76.0	1'-0"	9'-0"
	2'-0"	9'-0"
	2'-3"	8'-8"
	2'-6"	8'-8"
	2'-9"	7'-7"
	3'-0"	7'-7"
	3'-3"	6'-11"
	3'-6"	6'-6"
	3'-9"	6'-6"
	4'-0"	6'-5"
	4'-1"	6'-4"
80.0	1'-0"	9'-0"
	2'-0"	8'-10"
	2'-3"	8'-4"
	2'-6"	7'-11"
	2'-9"	7'-6"
	3'-0"	7'-3"
	3'-3"	6'-11"
	3'-6"	6'-8"
	3'-9"	6'-5"
	4'-0"	6'-3"
	4'-1"	6'-2"

FLORIDA BUILDING CODE (High Velocity Hurricane Zone)

SERIES FG-5000 FLUSH GLAZED
ALUMINUM WINDOW WALL SYSTEM
LARGE & SMALL MISSILE IMPACT LAMINATED GLASS

DRAWN BY: L.C./M.C.N./A.C.

12/01/11 DATE

11-196 DRAWING No

SHEET 13 OF 22

Oldcastle BuildingEnvelope™
800 Airport Rd - Terrell, TX 75160
www.OldcastleBE.com - Phone 800-869-4567

REV. No.	DESCRIPTION	DATE
1	OLD 10-075	12/01/11
2		

REV. No.	DESCRIPTION	DATE
3		
4		

TILLECO INC.
TILLIT TESTING & ENGINEERING COMPANY
6355 N.W. 36th. St., Ste. 305, VIRGINIA GARDENS, FL 33166
Phone : (305)871-1530 , Fax : (305)871-1531
e-mail: tilleco@aol.com
FB-00006719
WALTER A. TILLIT Jr., P.E.
FLORIDA Lic. # 44167

©2011 TILLECO, INC

WALTER A. TILLIT JR. LICENSE No. 44167 STATE OF FLORIDA PROFESSIONAL ENGINEER

P.E. SEAL/SIGNATURE/DATE

PRODUCT REVISED
as complying with the Florida
Building Code
Acceptance No 12-0107.06
Expiration Date Nov. 19, 2014
By Miami-Dade Product Control

MIAMI-DADE COUNTY

SILL CONNECTION DETAILS (SIDE VIEW)

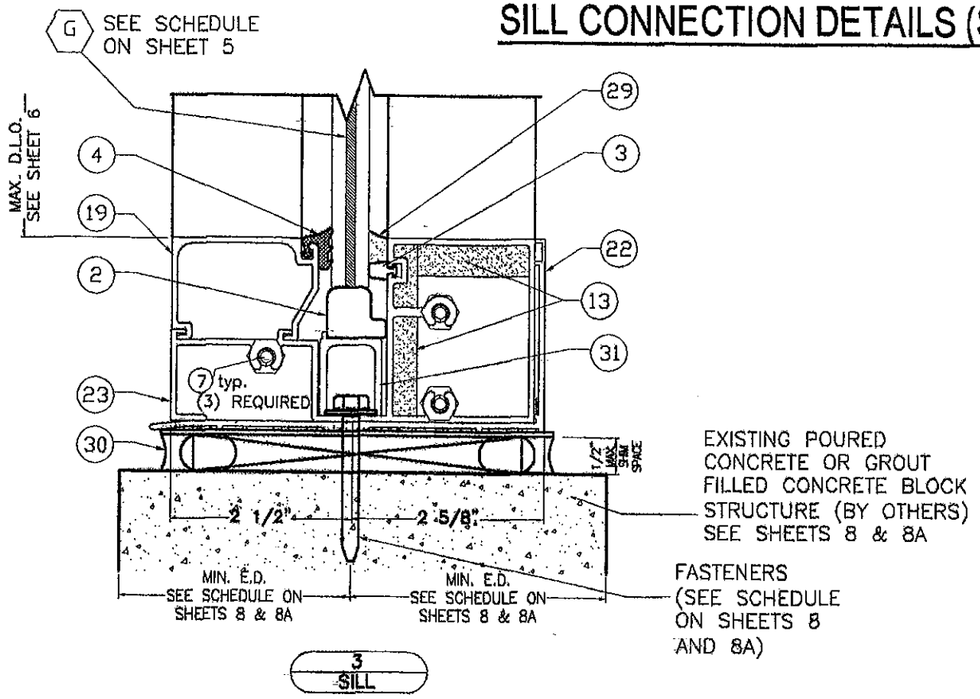

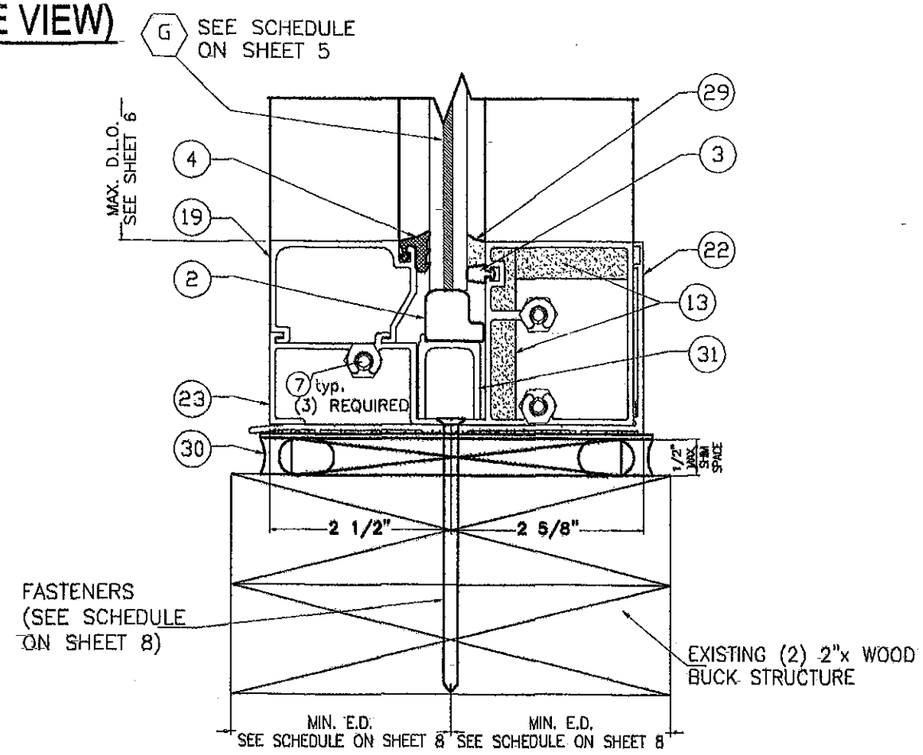

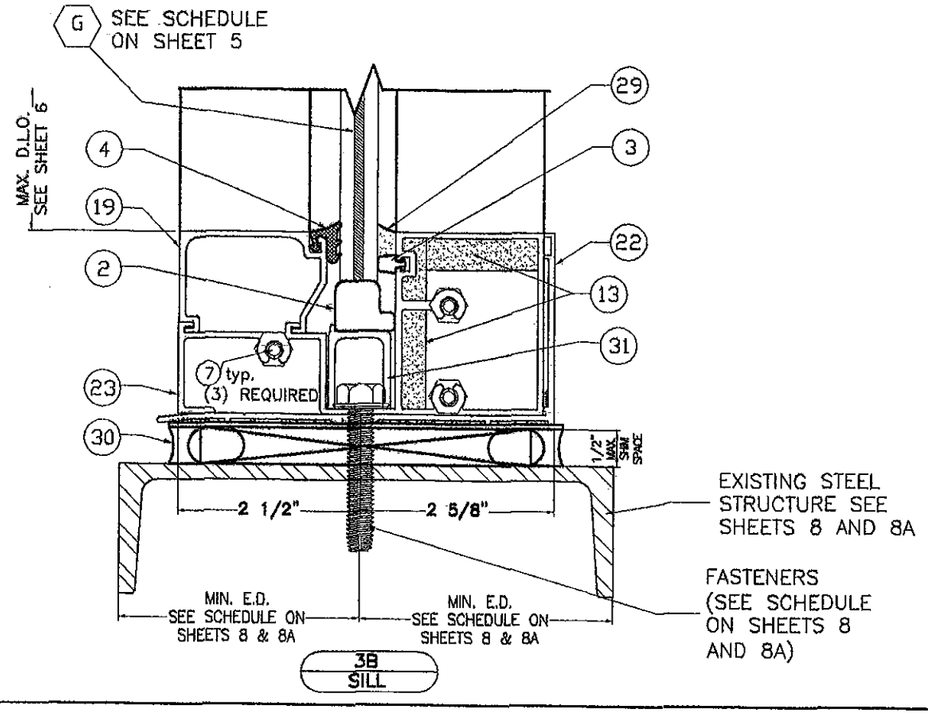

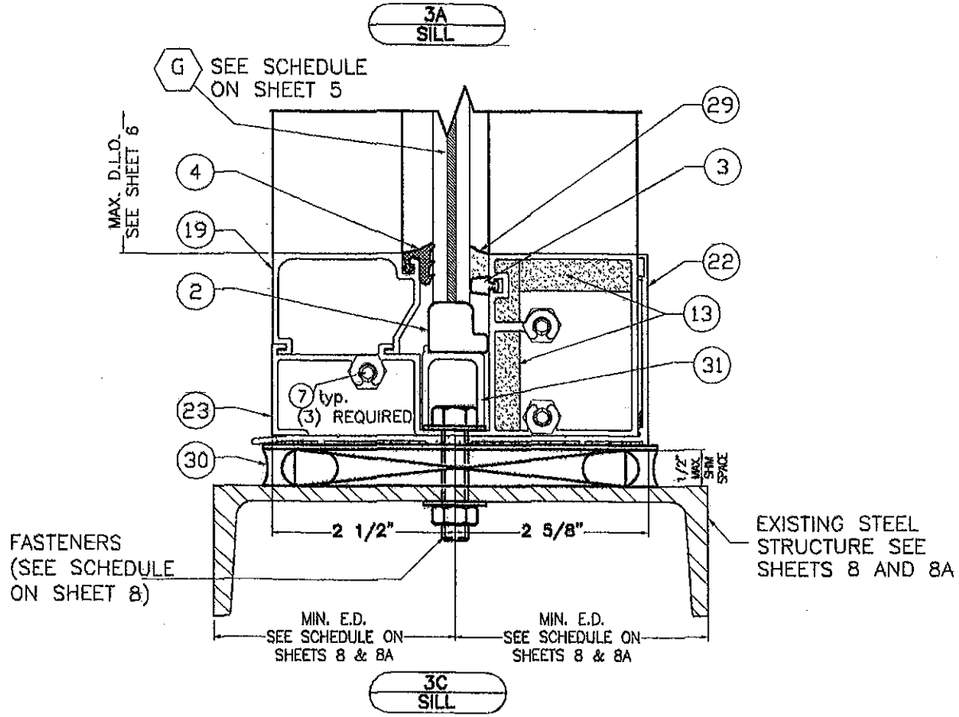

FLORIDA BUILDING CODE (High Velocity Hurricane Zone)

SERIES FG-5000 FLUSH GLAZED
ALUMINUM WINDOW WALL SYSTEM
LARGE & SMALL MISSILE IMPACT LAMINATED GLASS

Oldcastle BuildingEnvelope™
803 Airport Rd - Terrell, TX 75160
www.OldcastleBE.com - Phone 800-869-4567

REV. No	DESCRIPTION	DATE
1	OLD 10-075	12/01/11
2		
3		
4		

DRAWN BY: LG./M.C.V./A.G.
12/01/11 DATE
11-196 DRAWING No
SHEET 14 OF 22

©2011 TILTECO, INC

TILLIT TESTING & ENGINEERING COMPANY
8335 N.W. 38th. St., Ste. 305, VIRGINIA GARDENS, FL 33166
Phone : (305)871-1530 , Fax : (305)871-1537
e-mail: tilteco@aol.com
EB-0006719
WALTER A. TILLIT Jr. P.E.
FLORIDA Lic. # 44167

WALTER A. TILLIT JR. LICENSE NO. 44167 STATE OF FLORIDA PROFESSIONAL ENGINEER
SIGNATURE / DATE
P.E. SEAL

PRODUCT REVISED
as complying with the Florida
Building Code
Acceptance No 12-0104.06
Expiration Date May 18, 2014
By
Miami-Dade Product Control

MIAMI-DADE COUNTY

SILL CONNECTION DETAILS (SIDE VIEW)
(Continued)

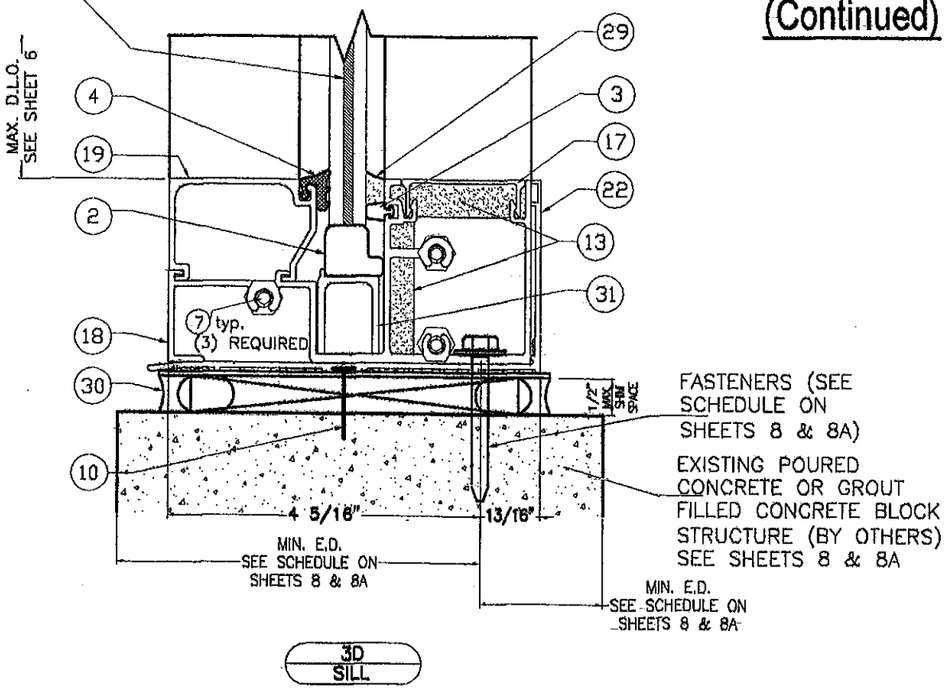

3D SILL

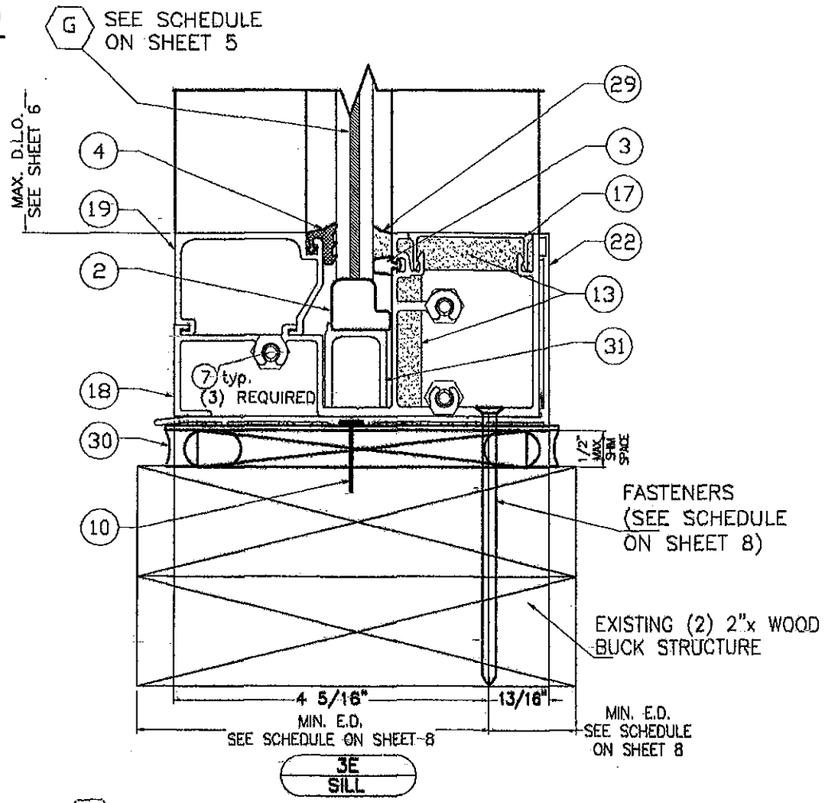

3E SILL

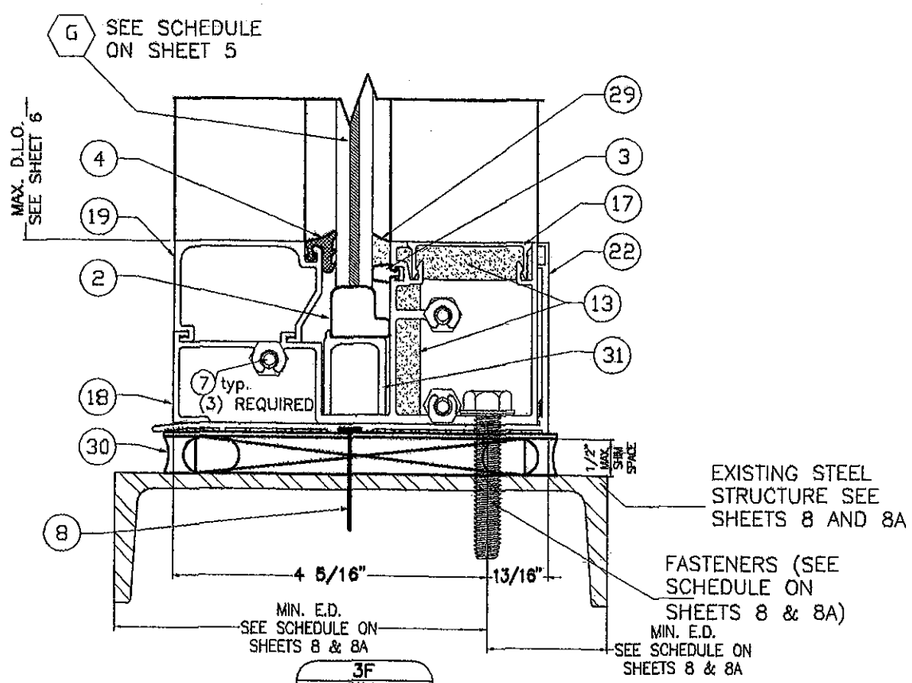

3F SILL

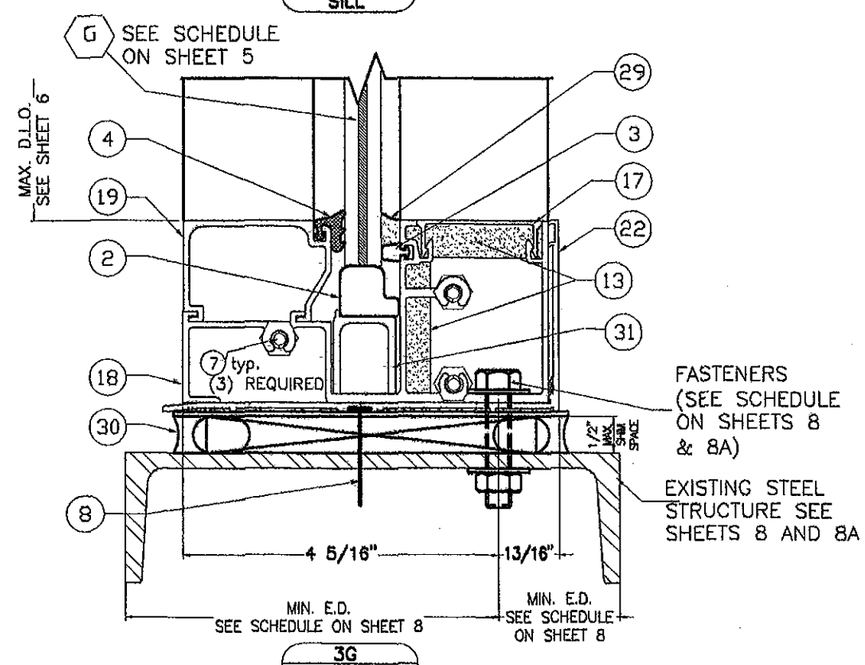

3G SILL

FLORIDA BUILDING CODE (High Velocity Hurricane Zone)

SERIES FG-5000 FLUSH GLAZED ALUMINUM WINDOW WALL SYSTEM
LARGE & SMALL MISSILE IMPACT LAMINATED GLASS

Oldcastle BuildingEnvelope™
803 Airport Rd - Terrell, TX 75160
www.OldcastleBE.com - Phone 800-869-4567

REV. No.	DESCRIPTION	DATE	REV. No.	DESCRIPTION	DATE
1	OLD 10-076	12/01/11	3		
2			4		

DRAWN BY: L.G./M.C.V./A.G.
12/01/11 DATE
11-196 DRAWING No
SHEET 15 OF 22

©2011 TILTECO, INC

TILTECO INC.
TILLIT TESTING & ENGINEERING COMPANY
5355 N.W. 36th. St., Ste. 305, VIRGINIA GARDENS, FL 33166
Phone : (305)871-1530 . Fax : (305)871-1531
e-mail: tilteco@aol.com
EB-0006719
WALTER A. TILLIT Jr. P.E.
FLORIDA Lic. # 44167

WALTER A. TILLIT JR. LICENSE No. 44167 STATE OF FLORIDA PROFESSIONAL ENGINEER
P.E. SEAL/SIGNATURE/DATE

PRODUCT REVISED as complying with the Florida Building Code
Acceptance No 12-0109.06
Expiration Date Nov. 18, 2014
By Manuel Jure
Miami-Dade Product Control

MIAMI-DADE COUNTY

SILL CONNECTION DETAILS
(SIDE VIEW)
(Continued)

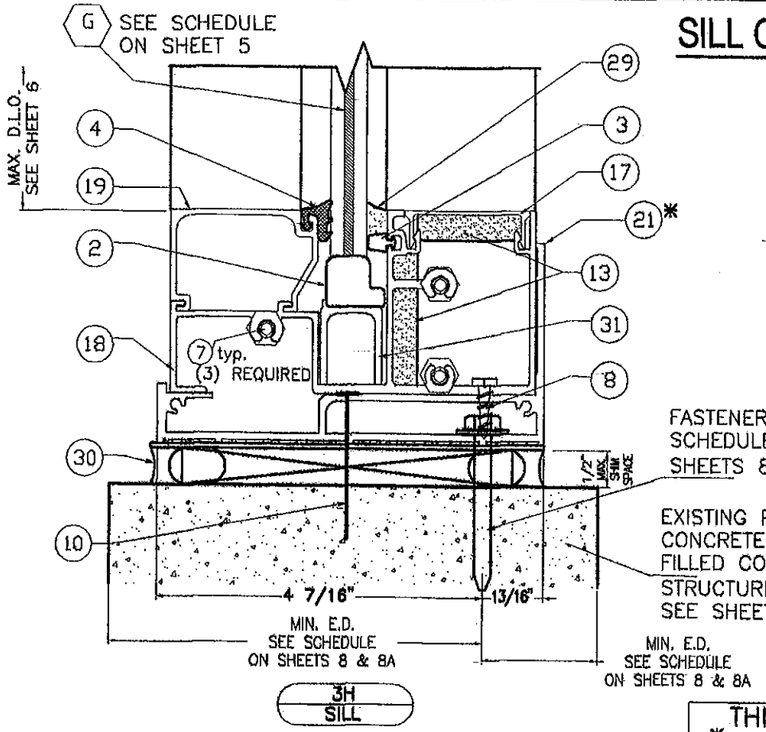

THIS SILL TYPE SHALL ONLY *BE USED FOR MAX. A.S.D. DESIGN LOADS UP TO 65 psf & FOR MULLION HEIGHTS UP TO 108".

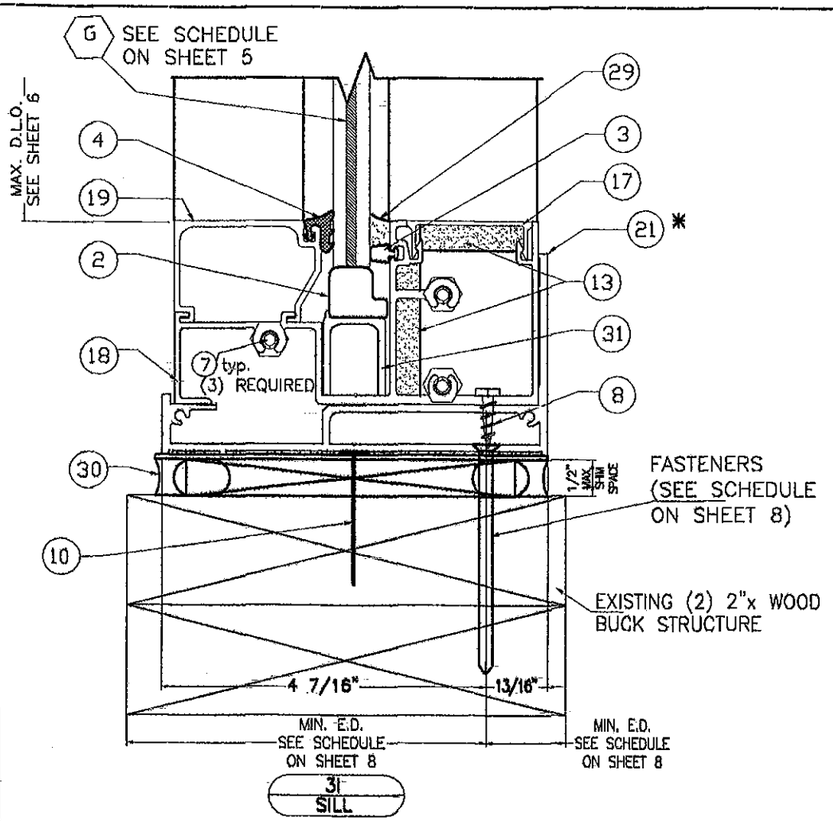

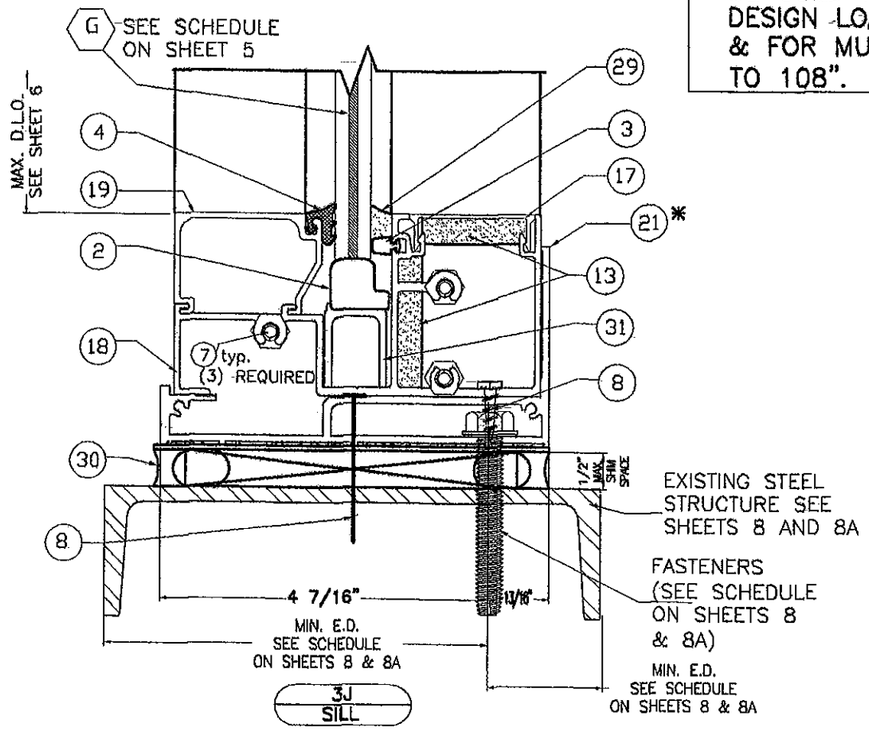

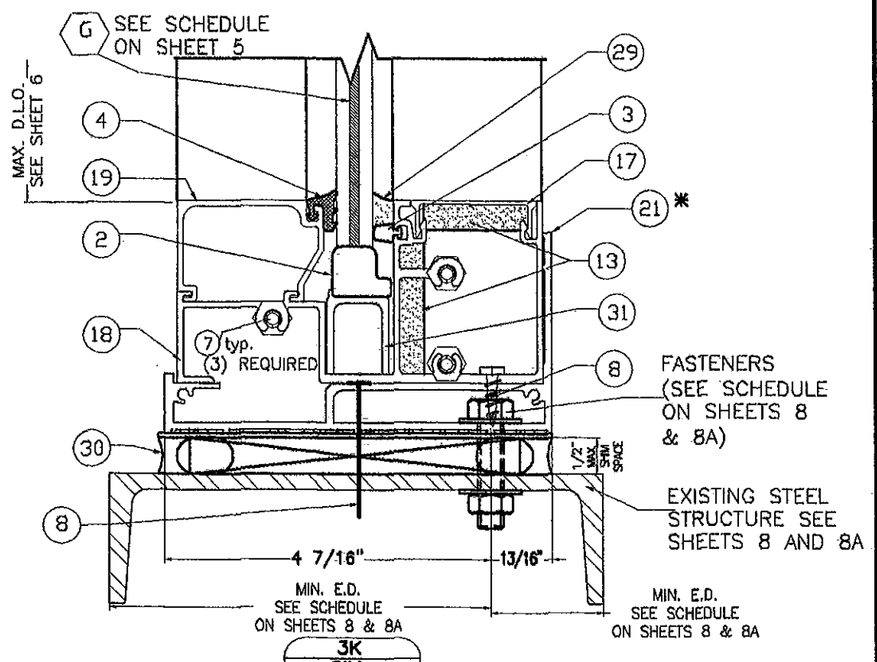

FLORIDA BUILDING CODE (High Velocity Hurricane Zone)

SERIES FG-5000 FLUSH GLAZED ALUMINUM WINDOW WALL SYSTEM LARGE & SMALL MISSILE IMPACT LAMINATED GLASS

Oldcastle BuildingEnvelope™
803 Airport Rd - Terrell, TX 75160
www.OldcastleBE.com - Phone 800-669-4567

REV. No.	DESCRIPTION	DATE	REV. No.	DESCRIPTION	DATE
1	OLD 10-075	12/01/11	3		
2			4		

DRAWN BY: LS./M.C.V./A.G.
12/01/11 DATE
11-196 DRAWING No
SHEET 16 OF 22

©2011 TILTECO, INC

TILLIT TESTING & ENGINEERING COMPANY
5395 N.W. 35th. St., Ste. 305, Virginia Gardens, FL 33166
Phone : (305)871-1530 . Fax : (305)871-1531
e-mail: tilteco@aol.com
EB-0006719
WALTER A. TILLIT Jr. P.E.
FLORIDA Lic. # 44167

WALTER A. TILLIT JR. LICENSE No 44167 STATE OF FLORIDA PROFESSIONAL ENGINEER
P.E. SIGNATURE & DATE

PRODUCT REVISED as complying with the Florida Building Code
Acceptance No. 12-0109.06
Expiration Date Nov. 19, 2014
By Miami-Dade Product Control

MIAMI-DADE COUNTY

HORIZONTAL SECTIONS AT STANDARD AND CORNER MULLIONS

STANDARD MULLION (20) + (26)

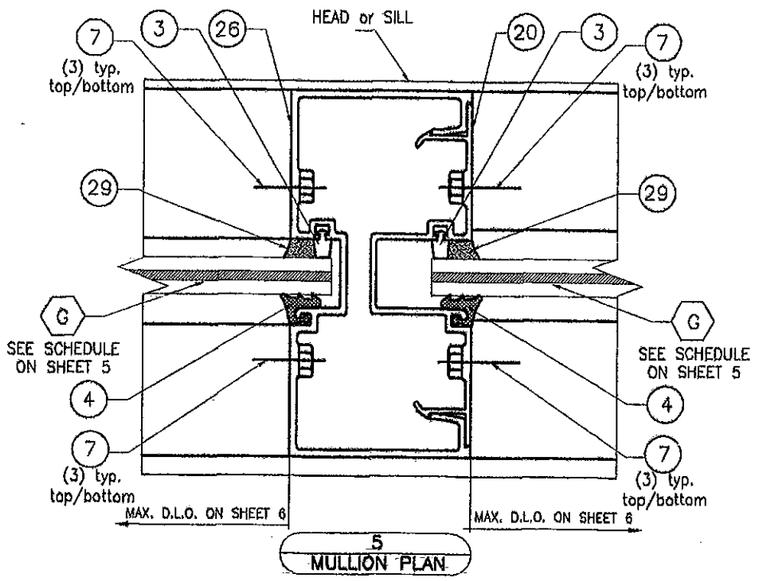

5
MULLION PLAN

STANDARD MULLION (20) + (26) W/ STEEL CHANNEL (16)

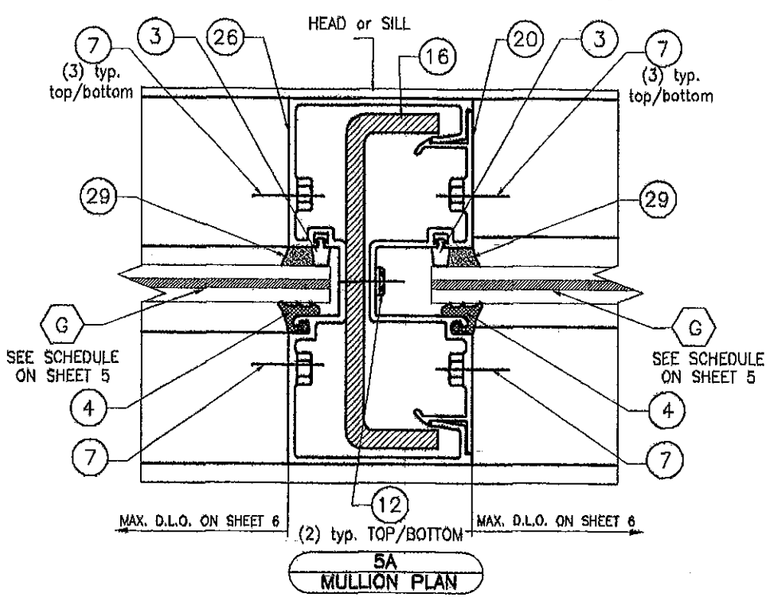

5A
MULLION PLAN

OUTSIDE CORNER MULLION (27) + (2) (20)

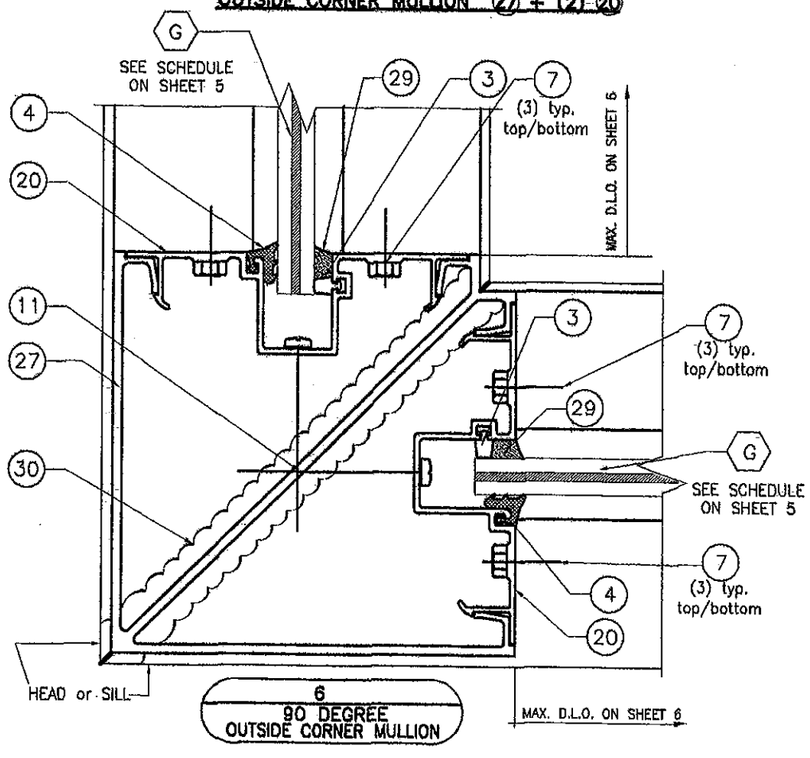

6
90 DEGREE
OUTSIDE CORNER MULLION

INSIDE CORNER MULLION (27) + (2) (20)

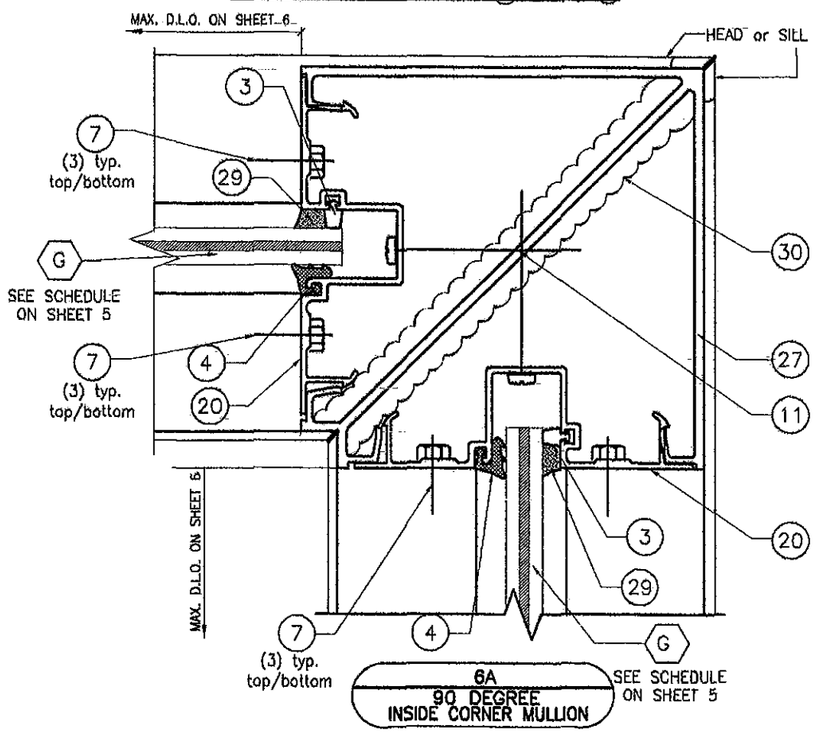

6A
90 DEGREE
INSIDE CORNER MULLION

FLORIDA BUILDING CODE (High Velocity Hurricane Zone)

SERIES FG-5000 FLUSH GLAZED
ALUMINUM WINDOW WALL SYSTEM
LARGE & SMALL MISSILE IMPACT LAMINATED GLASS

Oldcastle BuildingEnvelope™
803 Airport Rd - Terrell, TX 75160
www.OldcastleBE.com - Phone 800-669-4567

REV. No.	DESCRIPTION	DATE
1	OLD 10-076	12/01/11
2		
3		
4		

DRAWN BY: L.G./M.C.V./A.G.

12/01/11 DATE

11-196 DRAWING No.

SHEET 17 OF 22

©2011 TILTECO, INC

TILTECO INC.
TILLIT TESTING & ENGINEERING COMPANY
6305 N.W. 36th. St., Ste. 305, VIRGINIA GARDENS, FL. 33166
Phone : (305)871-1530 . Fax : (305)871-1531
e-mail: tilteco@aol.com
EB-0006719
WALTER A. TILLIT Jr. P.E.
FLORIDA Lic. # 44167

WALTER A. TILLIT JR. LICENSE No. 44167 STATE OF FLORIDA PROFESSIONAL ENGINEER

SIGNATURE/DATE

P.E.

PRODUCT REVISED
as complying with the Florida Building Code
Acceptance No 12-0103.06
Expiration Date Jan 18, 2014
By Miami Dade Product Control

MIAMI-DADE COUNTY

HORIZONTAL SECTIONS AT JAMB

TO POURED CONCRETE OR GROUT FILLED CONCRETE BLOCK STRUCTURE

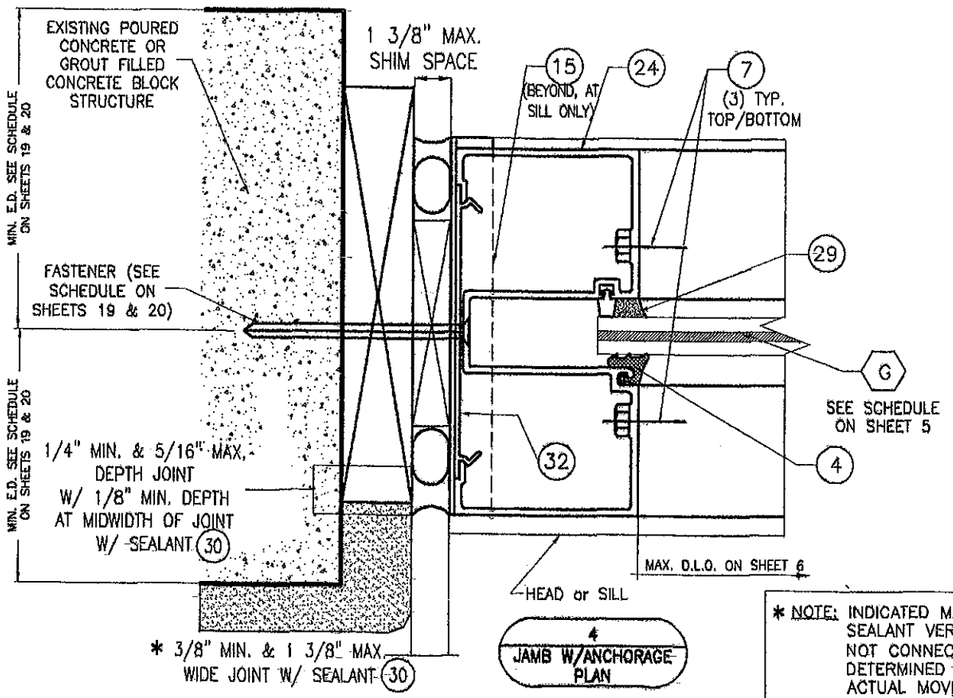

4
JAMB W/ANCHORAGE PLAN

TO STEEL STRUCTURE

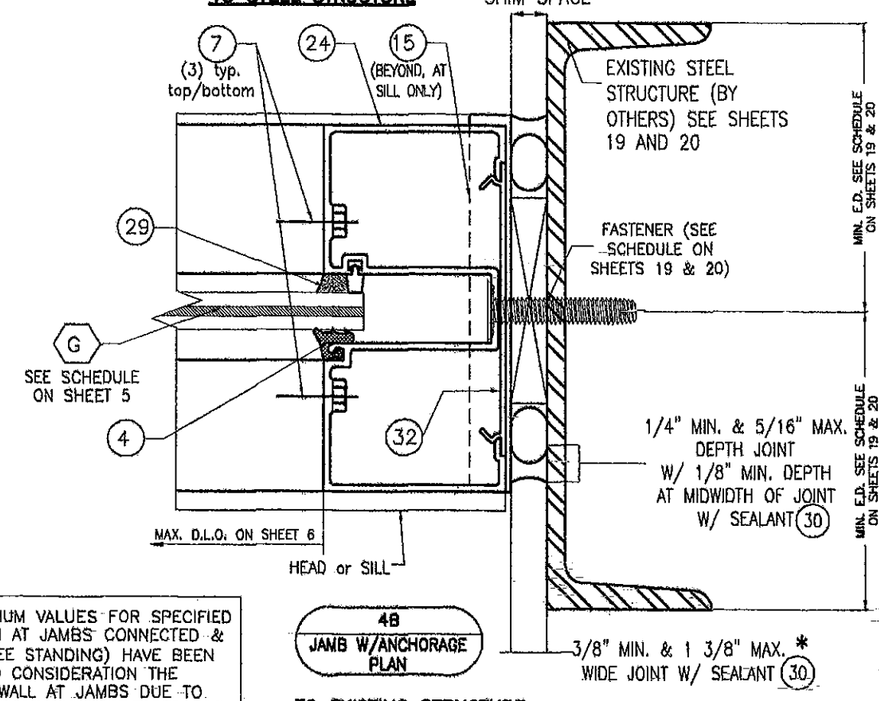

4B
JAMB W/ANCHORAGE PLAN

* NOTE: INDICATED MAXIMUM AND MINIMUM VALUES FOR SPECIFIED SEALANT VERTICAL JOINT WIDTH AT JAMBS CONNECTED & NOT CONNECTED TO WALL (FREE STANDING) HAVE BEEN DETERMINED ONLY TAKING INTO CONSIDERATION THE ACTUAL MOVEMENT OF GLASS WALL AT JAMBS DUE TO THERMAL, WIND AND ITS OWN CONSTRUCTION TOLERANCE, AND NOT PERFORMANCE FACTORS FROM THE SURROUNDING STRUCTURE.

TO WOOD STRUCTURE

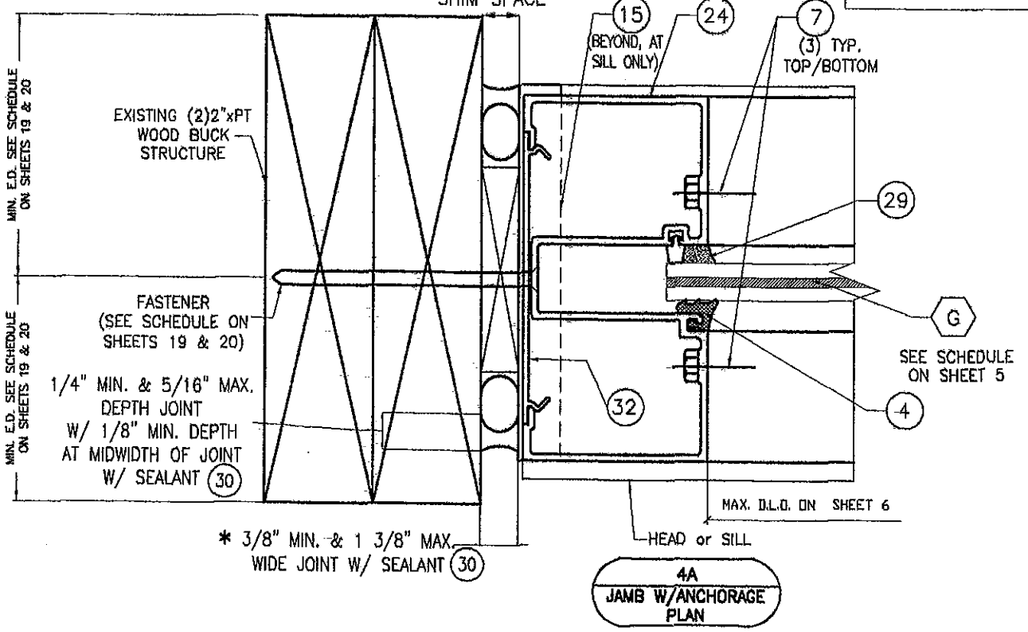

4A
JAMB W/ANCHORAGE PLAN

TO EXISTING STRUCTURE

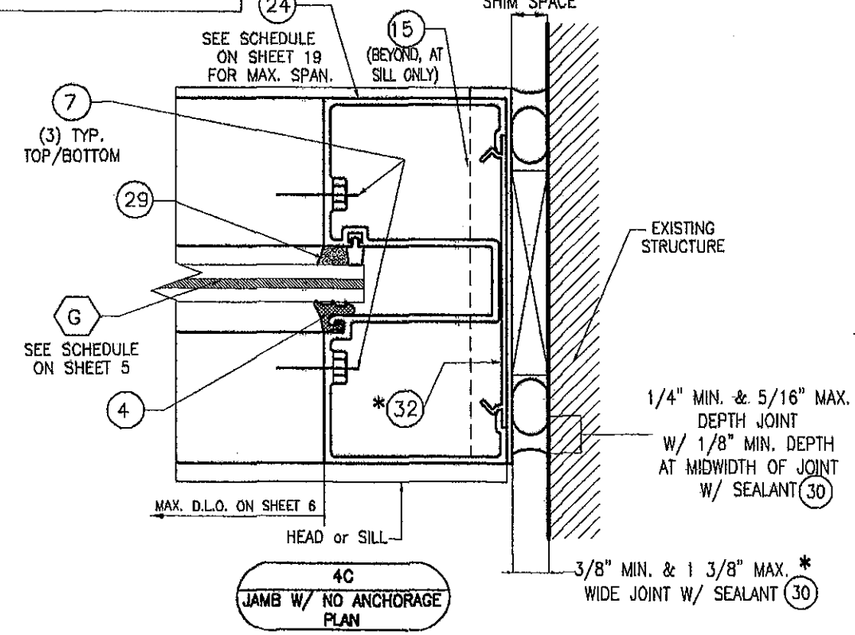

4C
JAMB W/ NO ANCHORAGE PLAN

FLORIDA BUILDING CODE (High Velocity Hurricane Zone)

SERIES FG-5000 FLUSH GLAZED ALUMINUM WINDOW WALL SYSTEM LARGE & SMALL MISSILE IMPACT LAMINATED GLASS

DRAWN BY: L.G./M.G.V./A.G.

12/01/11 DATE

11-196 DRAWING No

SHEET 18 OF 22

Oldcastle BuildingEnvelope™
803 Airport Rd - Terrell, TX 75160
www.OldcastleBE.com - Phone 800-869-4567

REV. No.	DESCRIPTION	DATE	REV. No.	DESCRIPTION	DATE
1	OLD 10-076	12/01/11	3		
2			4		

©2011 TILTECO, INC

TILLIT TESTING & ENGINEERING COMPANY
8355 N.W. 35th. Ste. 305, Miami, FL 33166
Phone: (305)477-1531 Fax: (305)477-1531
e-mail: tilteco@aol.com
EB-0005719
WALTER A. TILLIT Jr., P.E.
FLORIDA Lic. # 44167

WALTER A. TILLIT JR. LICENSE No. 44167 STATE OF FLORIDA PROFESSIONAL ENGINEER
SIGNATURE/DATE
P.E. SEAL

PRODUCT REVISED as complying with the Florida Building Code
Acceptance No. 12-0109.06
Expiration Date Nov. 18, 2014
By: Miami-Dade Product Control

MIAMI-DADE COUNTY

MAXIMUM A.S.D. DESIGN PRESSURE RATING SCHEDULE FOR JAMBS FASTENED W/ 3/8"Ø FASTENERS (C) *

* SEE SHEET 13 FOR DEFINITION OF b

OPTION #1 : (2) FASTENERS CONNECTION

MAXIMUM MULLION SPAN "L" (Ft-In)	EFFECTIVE SPACING * "b" (Ft-In)	J (Poured Concrete)	K (Poured Concrete)	L (Poured Concrete)	M (Grout Filled C. Block)	N (Grout Filled C. Block)	O (Grout Filled C. Block)	P (Steel)	Q (Wood)
6'-2"	1'-9"	90.0	90.0	85.3	83.4	90.0	85.3	90.0	59.9
	2'-0"	90.0	90.0	74.6	73.0	90.0	74.6	90.0	52.4
	2'-3"	82.3	90.0	66.3	64.9	82.3	66.3	90.0	46.6
	2'-6"	74.1	83.9	59.7	58.4	74.1	59.7	83.9	41.9
	2'-9"	67.4	76.3	54.3	53.1	67.4	54.3	76.3	38.1
	3'-0"	61.7	69.9	49.8	48.6	61.7	49.8	69.9	34.9
	3'-3"	57.0	64.5	45.9	44.9	57.0	45.9	64.5	32.3
	3'-6"	52.9	59.9	42.6	41.7	52.9	42.6	59.9	30.0
	3'-9"	49.4	55.9	39.8	38.9	49.4	39.8	55.9	28.0
	4'-0"	46.3	52.4	37.3	36.5	46.3	37.3	52.4	26.2
	4'-1"	45.1	51.1	36.4	35.6	45.1	36.4	51.1	25.5
6'-6"	1'-9"	90.0	90.0	80.9	79.1	90.0	80.9	90.0	56.8
	2'-0"	87.9	90.0	70.8	69.2	87.9	70.8	90.0	49.7
	2'-3"	78.1	88.4	62.9	61.5	78.1	62.9	88.4	44.2
	2'-6"	70.3	79.6	56.6	55.4	70.3	56.6	79.6	39.8
	2'-9"	63.9	72.3	51.5	50.3	63.9	51.5	72.3	36.2
	3'-0"	58.6	66.3	47.2	46.2	58.6	47.2	66.3	33.2
	3'-3"	54.1	61.2	43.6	42.6	54.1	43.6	61.2	30.6
	3'-6"	50.2	56.8	40.5	39.6	50.2	40.5	56.8	28.4
	3'-9"	46.9	53.1	37.8	36.9	46.9	37.8	53.1	26.5
	4'-0"	43.9	49.7	35.4	34.6	43.9	35.4	49.7	24.9
	4'-1"	42.8	48.5	34.5	33.7	42.8	34.5	48.5	24.2
7'-0"	1'-9"	90.0	90.0	75.1	73.5	90.0	75.1	90.0	52.8
	2'-0"	81.6	90.0	65.7	64.3	81.6	65.7	90.0	46.2
	2'-3"	72.5	82.1	58.4	57.1	72.5	58.4	82.1	41.1
	2'-6"	65.3	73.9	52.6	51.4	65.3	52.6	73.9	36.9
	2'-9"	59.3	67.2	47.8	46.8	59.3	47.8	67.2	33.6
	3'-0"	54.4	61.6	43.8	42.9	54.4	43.8	61.6	30.8
	3'-3"	50.2	56.8	40.5	39.6	50.2	40.5	56.8	28.4
	3'-6"	46.6	52.8	37.6	36.7	46.6	37.6	52.8	26.4
	3'-9"	43.5	49.3	35.1	34.3	43.5	35.1	49.3	24.6
	4'-0"	40.8	46.2	32.9	32.1	40.8	32.9	46.2	23.1
	4'-1"	39.8	45.0	32.0	31.3	39.8	32.0	45.0	22.5
7'-6"	1'-9"	87.0	90.0	70.1	68.6	87.0	70.1	90.0	49.3
	2'-0"	76.2	86.2	61.4	60.0	76.2	61.4	86.2	43.1
	2'-3"	67.7	76.6	54.5	53.3	67.7	54.5	76.6	38.3
	2'-6"	60.9	69.0	49.1	48.0	60.9	49.1	69.0	34.5
	2'-9"	55.4	62.7	44.6	43.6	55.4	44.6	62.7	31.3
	3'-0"	50.8	57.5	40.9	40.0	50.8	40.9	57.5	28.7
	3'-3"	46.9	53.1	37.8	36.9	46.9	37.8	53.1	26.5
	3'-6"	43.5	49.3	35.1	34.3	43.5	35.1	49.3	24.6
	3'-9"	40.6	46.0	32.7	32.0	40.6	32.7	46.0	23.0
	4'-0"	38.1	43.1	30.7	30.0	38.1	30.7	43.1	21.6
	4'-1"	34.8	39.4	28.0	27.4	34.8	28.0	39.4	19.7
8'-0"	1'-9"	81.6	90.0	65.7	64.3	81.6	65.7	90.0	46.2
	2'-0"	71.4	80.8	57.5	56.3	71.4	57.5	80.8	40.4
	2'-3"	63.5	71.8	51.1	50.0	63.5	51.1	71.8	35.9
	2'-6"	57.1	64.7	46.0	45.0	57.1	46.0	64.7	32.3
	2'-9"	51.9	58.8	41.8	40.9	51.9	41.8	58.8	29.4
	3'-0"	47.6	53.9	38.4	37.5	47.6	38.4	53.9	26.9
	3'-3"	43.9	49.7	35.4	34.6	43.9	35.4	49.7	24.9
	3'-6"	40.8	46.2	32.9	32.1	40.8	32.9	46.2	23.1
	3'-9"	38.1	43.1	30.7	30.0	38.1	30.7	43.1	21.6
	4'-0"	35.7	40.4	28.8	28.1	35.7	28.8	40.4	20.2
	4'-1"	34.8	39.4	28.0	27.4	34.8	28.0	39.4	19.7
8'-6"	1'-9"	76.8	86.9	61.9	60.5	76.8	61.9	86.9	43.5
	2'-0"	67.2	76.1	54.1	52.9	67.2	54.1	76.1	38.0
	2'-3"	59.7	67.6	48.1	47.1	59.7	48.1	67.6	33.8
	2'-6"	53.8	60.9	43.3	42.4	53.8	43.3	60.9	30.4
	2'-9"	48.9	55.3	39.4	38.5	48.9	39.4	55.3	27.7
	3'-0"	44.8	50.7	36.1	35.3	44.8	36.1	50.7	25.4
	3'-3"	41.3	46.8	33.3	32.6	41.3	33.3	46.8	23.4
	3'-6"	38.4	43.5	30.9	30.3	38.4	30.9	43.5	21.7
	3'-9"	35.8	40.6	28.9	28.2	35.8	28.9	40.6	20.3
	4'-0"	33.6	38.0	27.1	26.5	33.6	27.1	38.0	19.0
	4'-1"	32.7	37.1	26.4	25.8	32.7	26.4	37.1	18.5
9'-0"	3'-6"	72.6	82.1	58.4	57.1	72.6	58.4	82.1	41.1
	4'-0"	63.5	71.8	51.1	50.0	63.5	51.1	71.8	35.9
	4'-6"	56.4	63.9	45.5	44.4	56.4	45.6	63.9	31.9
	5'-0"	50.8	57.5	40.9	40.0	50.8	40.9	57.5	28.7
	5'-6"	46.2	52.2	37.2	36.4	46.2	37.2	52.2	26.1
	6'-0"	42.3	47.9	34.1	33.3	42.3	34.1	47.9	23.9
	6'-6"	39.1	44.2	31.5	30.8	39.1	31.5	44.2	22.1
	7'-0"	36.3	41.1	29.2	28.6	36.3	29.2	41.1	20.5
	7'-6"	33.8	38.3	27.3	26.7	33.8	27.3	38.3	19.2
	8'-0"	31.7	35.9	25.6	25.0	31.7	25.6	35.9	18.0
	8'-2"	30.9	35.0	24.9	24.4	30.9	24.9	35.0	17.5
9'-6"	3'-6"	68.7	77.8	55.4	54.1	68.7	55.4	77.8	38.9
	4'-0"	60.1	68.1	48.4	47.4	60.1	48.4	68.1	34.0
	4'-6"	53.4	60.5	43.1	42.1	53.4	43.1	60.5	30.2
	5'-0"	48.1	54.4	38.8	37.9	48.1	38.8	54.4	27.2
	5'-6"	43.7	49.5	35.2	34.4	43.7	35.2	49.5	24.7
	6'-0"	40.1	45.4	32.3	31.6	40.1	32.3	45.4	22.7
	6'-6"	37.0	41.9	29.8	29.1	37.0	29.8	41.9	20.9
	7'-0"	34.4	38.9	27.7	27.1	34.4	27.7	38.9	19.4
	7'-6"	32.1	36.3	25.8	25.3	32.1	25.8	36.3	18.1
	8'-0"	30.1	34.0	24.2	23.7	30.1	24.2	34.0	17.0
	8'-2"	29.3	33.2	23.6	23.1	29.3	23.6	33.2	16.6
10'-0"	3'-6"	65.3	73.9	52.6	51.4	65.3	52.6	73.9	36.9
	4'-0"	57.1	64.7	46.0	45.0	57.1	46.0	64.7	32.3
	4'-6"	50.8	57.5	40.9	40.0	50.8	40.9	57.5	28.7
	5'-0"	45.7	51.7	36.8	36.0	45.7	36.8	51.7	25.9
	5'-6"	41.5	47.0	33.5	32.7	41.5	33.5	47.0	23.5
	6'-0"	38.1	43.1	30.7	30.0	38.1	30.7	43.1	21.6
	6'-6"	35.1	39.8	28.3	27.7	35.1	28.3	39.8	19.9
	7'-0"	32.6	36.9	26.3	25.7	32.6	26.3	36.9	18.5
	7'-6"	30.5	34.5	24.5	24.0	30.5	24.5	34.5	17.2
	8'-0"	28.6	32.3	23.0	22.5	28.6	23.0	32.3	16.2
	8'-2"	27.8	31.5	22.4	21.9	27.8	22.4	31.5	15.8

OPTION #2 : (3) FASTENERS CONNECTION

MAXIMUM MULLION SPAN "L" (Ft-In)	EFFECTIVE SPACING * "b" (Ft-In)	J (Poured Concrete)	K (Poured Concrete)	L (Poured Concrete)	M (Grout Filled C. Block)	N (Grout Filled C. Block)	O (Grout Filled C. Block)	P (Steel)	Q (Wood)
6'-2"	1'-9"	90.0	90.0	90.0	90.0	90.0	90.0	90.0	89.9
	2'-0"	90.0	90.0	90.0	90.0	90.0	90.0	90.0	78.6
	2'-3"	90.0	90.0	90.0	90.0	90.0	90.0	90.0	69.9
	2'-6"	90.0	90.0	89.6	87.6	90.0	89.6	90.0	62.9
	2'-9"	90.0	90.0	81.4	79.6	90.0	81.4	90.0	57.2
	3'-0"	90.0	90.0	74.6	73.0	90.0	74.6	90.0	52.4
	3'-3"	85.5	90.0	68.9	67.4	85.5	68.9	90.0	48.4
	3'-6"	79.4	89.9	64.0	62.5	79.4	64.0	89.9	44.9
	3'-9"	74.1	83.9	59.7	58.4	74.1	59.7	83.9	41.9
	4'-0"	69.5	78.6	56.0	54.7	69.5	56.0	78.6	39.3
	4'-1"	67.7	76.6	54.6	53.3	67.7	54.6	76.6	38.3
6'-6"	1'-9"	90.0	90.0	90.0	90.0	90.0	90.0	90.0	85.3
	2'-0"	90.0	90.0	90.0	90.0	90.0	90.0	90.0	74.6
	2'-3"	90.0	90.0	90.0	90.0	90.0	90.0	90.0	66.3
	2'-6"	90.0	90.0	85.0	83.1	90.0	85.0	90.0	59.7
	2'-9"	90.0	90.0	77.2	75.5	90.0	77.2	90.0	54.3
	3'-0"	87.9	90.0	70.8	69.2	87.9	70.8	90.0	49.7
	3'-3"	81.1	90.0	65.4	63.9	81.1	65.4	90.0	45.9
	3'-6"	75.3	85.3	60.7	59.3	75.3	60.7	88.3	42.6
	3'-9"	70.3	79.6	56.6	55.4	70.3	56.6	79.6	39.8
	4'-0"	65.9	74.6	53.1	51.9	65.9	53.1	74.6	37.3
	4'-1"	64.2	72.7	51.8	50.6	64.2	51.8	72.7	36.4
7'-0"	1'-9"	90.0	90.0	90.0	90.0	90.0	90.0	90.0	79.2
	2'-0"	90.0	90.0	90.0	90.0	90.0	90.0	90.0	69.3
	2'-3"	90.0	90.0	87.7	85.7	90.0	87.7	90.0	61.6
	2'-6"	90.0	90.0	78.9	77.1	90.0	78.9	90.0	55.4
	2'-9"	89.0	90.0	71.7	70.1	89.0	71.7	90.0	50.4
	3'-0"	81.6	90.0	65.7	64.3	81.6	65.7	90.0	46.2
	3'-3"	75.3	85.3	60.7	59.3	75.3	60.7	85.3	42.6
	3'-6"	69.9	79.2	56.4	55.1	69.9	56.4	79.2	39.6
	3'-9"	65.3	73.9	52.6	51.4	65.3	52.6	73.9	36.9
	4'-0"	61.2	69.3	49.3	48.2	61.2	49.3	69.3	34.6
	4'-1"	59.6	67.5	48.1	47.0	59.6	48.1	67.5	33.8
7'-6"	1'-9"	90.0	90.0	90.0	90.0	90.0	90.0	90.0	73.9
	2'-0"	90.0	90.0	90.0	90.0	90.0	90.0	90.0	64.7
	2'-3"	90.0	90.0	81.8	80.0	90.0	81.8	90.0	57.5
	2'-6"	90.0	90.0	73.6	72.0	90.0	73.6	90.0	51.7
	2'-9"	83.1	90.0	66.9	65.5	83.1	66.9	90.0	47.0
	3'-0"	76.2	86.2	61.4	60.0	76.2	61.4	86.2	43.1
	3'-3"	70.3	79.6	56.6	55.4	70.3	56.6	79.6	39.8
	3'-6"	65.3	73.9	52.6	51.4	65.3	52.6	73.9	36.9
	3'-9"	60.9	69.0	49.1	48.0	60.9	49.1	69.0	34.5
	4'-0"	57.1	64.7	46.0	45.0	57.1	46.0	64.7	32.3
	4'-1"	52.2	59.1	42.1	41.1	52.2	42.1	59.1	29.5
8'-0"	1'-9"	90.0	90.0	90.0	90.0	90.0	90.0	90.0	69.3
	2'-0"	90.0	90.0	86.3	84.4	90.0	86.3	90.0	60.6
	2'-3"	90.0	90.0	76.7	75.0	90.0	76.7	90.0	53.9
	2'-6"	85.7	90.0	69.0	67.5	85.7	69.0	90.0	48.5
	2'-9"	77.9	88.2	62.8	61.4	77.9	62.8	88.2	44.1
	3'-0"	71.4	80.8	57.5	56.3	71.4	57.5	80.8	40.4
	3'-3"	65.9	74.6	53.1	51.9	65.9	53.1	74.6	37.3
	3'-6"	61.2	69.3	49.3	48.2	61.2	49.3	69.3	34.6
	3'-9"	57.1	64.7	46.0	45.0	57.1	46.0	64.7	32.3
	4'-0"	53.5	60.6	43.1	42.2	53.5	43.1	60.6	30.3
	4'-1"	52.2	59.1	42.1	41.1	52.2	42.1	59.1	29.5
8'-6"	1'-9"	90.0	90.0	90.0	90.0	90.0	90.0	90.0	65.2
	2'-0"	90.0	90.0	81.2	79.4	90.0	81.2	90.0	57.1
	2'-3"	89.6	90.0	72.2	70.6	89.6	72.2	90.0	50.7
	2'-6"	80.6	90.0	65.0	63.5	80.6	65.0	90.0	45.6
	2'-9"	73.3	83.0	59.1	57.8	73.3	59.1	83.0	41.5
	3'-0"	67.2	76.1	54.1	52.9	67.2	54.1	76.1	38.0
	3'-3"	62.0	70.2	50.0	48.9	62.0	50.0	70.2	35.1
	3'-6"	57.6	65.2	46.4	45.4	57.6	46.4	65.2	32.6
	3'-9"	53.8	60.9	43.3	42.4	53.8	43.3	60.9	30.4
	4'-0"	50.4	57.1	40.6	39.7	50.4	40.6	57.1	28.5
	4'-1"	49.1	55.6	39.6	38.7	49.1	39.6	55.6	27.8
9'-0"	3'-6"	90.0	90.0	87.7	85.7	90.0	87.7	90.0	61.6
	4'-0"	90.0	90.0	76.7	75.0	90.0	76.7	90.0	53.9
	4'-6"	84.6	90.0	68.2	66.7	84.6	68.2	90.0	47.9
	5'-0"	76.2	86.2	61.4	60.0	76.2	61.4	86.2	43.1
	5'-6"	69.2	78.4	55.8	54.5	69.2	55.8	78.4	39.2
	6'-0"	63.5	71.8	51.1	50.0	63.5	51.1	71.8	35.9
	6'-6"	58.6	66.3	47.2	46.2	58.6	47.2	66.3	33.2
	7'-0"	54.4	61.6	43.8	42.9	54.4	43.8	61.6	30.8
	7'-6"	50.8	57.5	40.9	40.0	50.8	40.9	57.5	28.7
	8'-0"	47.6	53.9	38.4	37.5	47.6	38.4	53.9	26.9
	8'-2"	46.4	52.5	37.4	36.5	46.4	37.4	52.5	26.3
9'-6"	3'-6"	90.0	90.0	83.0	81.2	90.0	83.0	90.0	58.3
	4'-0"	90.0	90.0	72.7	71.1	90.0	72.7	90.0	51.0
	4'-6"	80.2	90.0	64.6	63.2	80.2	64.6	90.0	45.4
	5'-0"	72.1	81.7	58.1	56.8	72.1	58.1	81.7	40.8
	5'-6"	65.6	74.2	52.8	51.7	65.6	52.8	74.2	37.1
	6'-0"	60.1	68.1	48.4	47.4	60.1	48.4	68.1	34.0
	6'-6"	55.5	62.8	44.7	43.7	55.5	44.7	62.8	31.4
	7'-0"	51.5	58.3	41.5	40.6	51.5	41.5	58.3	29.2
	7'-6"	48.1	54.4	38.8	37.9	48.1	38.8	54.4	27.2
	8'-0"	45.1	51.0	36.3	35.5	45.1	36.3	51.0	25.5
	8'-2"	43.9	49.7	35.4	34.6	43.9	35.4	49.7	24.9
10'-0"	3'-6"	90.0	90.0	78.9	77.1	90.0	78.9	90.0	55.4
	4'-0"	85.7	90.0	69.0	67.5	85.7	69.0	90.0	48.5
	4'-6"	76.2	86.2	61.4	60.0	76.2	61.4	86.2	43.1
	5'-0"	68.5	77.6	55.2	54.0	68.5	55.2	77.6	38.8
	5'-6"	62.3	70.5	50.2	49.1	62.3	50.2	70.5	35.3
	6'-0"	57.1	64.7	46.0	45.0	57.1	46.0	64.7	32.3
	6'-6"	52.7	59.7	42.5	41.5	52.7	42.5	59.7	29.8
	7'-0"	49.0	55.4	39.4	38.6	49.0	39.4	55.4	27.7
	7'-6"	45.7	51.7	36.8	36.0	45.7	36.8	51.7	25.9
	8'-0"	42.8	48.5	34.5	33.8	42.8	34.5	48.5	24.2
	8'-2"	41.7	47.3	33.6	32.9	41.7	33.6	47.3	23.6

OPTION #3 : (4) FASTENERS CONNECTION

MAXIMUM MULLION SPAN "L" (Ft-In)	EFFECTIVE SPACING * "b" (Ft-In)	J (Poured Concrete)	K (Poured Concrete)	L (Poured Concrete)	M (Grout Filled C. Block)	N (Grout Filled C. Block)	O (Grout Filled C. Block)	P (Steel)	Q (Wood)
6'-2"	1'-9"	90.0	90.0	90.0	90.0	90.0	90.0	90.0	90.0
	2'-0"	90.0	90.0	90.0	90.0	90.0	90.0	90.0	90.0
	2'-3"	90.0	90.0	90.0	90.0	90.0	90.0	90.0	90.0
	2'-6"	90.0	90.0	90.0	90.0	90.0	90.0	90.0	83.9
	2'-9"	90.0	90.0	90.0	90.0	90.0	90.0	90.0	76.3
	3'-0"	90.0	90.0	90.0	90.0	90.0	90.0	90.0	69.9
	3'-3"	90.0	90.0	90.0	89.8	90.0	90.0	90.0	64.5
	3'-6"	90.0	90.0	85.3	83.4	90.0	85.3	90.0	59.9
	3'-9"	90.0	90.0	79.6	77.8	90.0	79.6	90.0	55.9
	4'-0"	90.0	90.0	74.6	73.0	90.0	74.6	90.0	52.4
	4'-1"	90.0	90.0	72.7	71.1	90.0	72.7	90.0	51.1
6'-6"	1'-9"	90.0	90.0	90.0	90.0	90.0	90.0	90.0	90.0
	2'-0"	90.0	90.0	90.0	90.0	90.0	90.0	90.0	90.0
	2'-3"	90.0	90.0	90.0	90.0	90.0	90.0	90.0	88.4
	2'-6"	90.0	90.0	90.0	90.0	90.0	90.0	90.0	79.6
	2'-9"	90.0	90.0	90.0	90.0	90.0	90.0	90.0	72.3
	3'-0"	90.0	90.0	90.0	90.0	90.0	90.0	90.0	66.3
	3'-3"	90.0	90.0	87.1	85.2	90.0	87.1	90.0	61.2
	3'-6"	90.0	90.0	80.9	79.1	90.0	80.9	90.0	56.8
	3'-9"	90.0	90.0	75.5	73.8	90.0	75.5	90.0	53.1
	4'-0"	87.9	90.0	70.8	69.2	87.9	70.8	90.0	49.7
	4'-1"	85.6	90.0	69.0	67.5	85.6	69.0	90.0	48.5
7'-0"	1'-9"	90.0	90.0	90.0	90.0	90.0	90.0	90.0	90.0
	2'-0"	90.0	90.0	90.0	90.0	90.0	90.0	90.0	90.0
	2'-3"	90.0	90.0	90.0	90.0	90.0	90.0	90.0	82.1
	2'-6"	90.0	90.0	90.0	90.0	90.0	90.0	90.0	73.9
	2'-9"	90.0	90.0	90.0	90.0	90.0	90.0	90.0	67.2
	3'-0"	90.0	90.0	87.7	85.7	90.0	87.7	90.0	61.6
	3'-3"	90.0	90.0	80.9	79.1	90.0	80.9	90.0	56.8
	3'-6"	90.0	90.0	75.1	73.5	90.0	75.1	90.0	52.8
	3'-9"	87.0	90.0	70.1	68.6	87.0	70.1	90.0	49.3
	4'-0"	81.6	90.0	65.7	64.3	81.6	65.7	90.0	46.2
	4'-1"	79.5	90.0	64.1	62.7	79.5	64.1	90.0	45.0
7'-6"	1'-9"	90.0	90.0	90.0	90.0	90.0	90.0	90.0	90.0
	2'-0"	90.0	90.0	90.0	90.0	90.0	90.0	90.0	86.2
	2'-3"	90.0	90.0	90.0	90.0	90.0	90.0	90.0	76.6
	2'-6"	90.0	90.0	90.0	90.0	90.0	90.0	90.0	69.0
	2'-9"	90.0	90.0	89.3	87.3	90.0	89.3	90.0	62.7
	3'-0"	90.0	90.0	81.8	80.0	90.0	81.8	90.0	57.5
	3'-3"	90.0	90.0	75.5	73.8	90.0	75.5	90.0	53.1
	3'-6"	87.0	90.0	70.1	68.6	87.0	70.1	90.0	49.3
	3'-9"	81.2	90.0	65.5	64.0	81.2	65.5	90.0	46.0
	4'-0"	76.2	86.2	61.4	60.0	76.2	61.4	86.2	43.1
	4'-1"	69.6	78.8	56.1	54.8	69.6	56.1	78.8	39.4
8'-0"	1'-9"	90.0	90.0	90.0	90.0	90.0	90.0	90.0	90.0
	2'-0"	90.0	90.0	90.0	90.0	90.0	90.0	90.0	80.8
	2'-3"	90.0	90.0	90.0	90.0	90.0	90.0	90.0	71.8
	2'-6"	90.0	90.0	90.0	90.0	90.0	90.0	90.0	64.7
	2'-9"	90.0	90.0	83.7	81.8	90.0	83.7	90.0	58.8
	3'-0"	90.0	90.0	76.7	75.0	90.0	76.7	90.0	53.9
	3'-3"	87.9	90.0	70.8	69.2	87.9	70.8	90.0	49.7
	3'-6"	81.6	90.0	65.7	64.3	81.6	65.7	90.0	46.2
	3'-9"	76.2	86.2	61.4	60.0	76.2	61.4	86.2	43.1
	4'-0"	71.4	80.8	57.5	56.3	71.4	57.5	80.8	40.4
	4'-1"	69.6	78.8	56.1	54.8	69.6	56.1	78.8	39.4
8'-6"	1'-9"	90.0	90.0	90.0	90.0	90.0	90.0	90.0	86.9
	2'-0"	90.0	90.0	90.0	90.0	90.0	90.0	90.0	76.1
	2'-3"	90.0	90.0	90.0	90.0	90.0	90.0	90.0	67.6
	2'-6"	90.0	90.0	86.6	84.7	90.0	86.6	90.0	60.9
	2'-9"	90.0	90.0	78.8	77.0	90.0	78.8	90.0	55.3
	3'-0"	89.6	90.0	72.2	70.6	89.6	72.2	90.0	50.7
	3'-3"	82.7	90.0	66.6	65.2	82.7	66.6	90.0	46.8
	3'-6"	76.8	86.9	61.9	60.5	76.8	61.9	86.9	43.5
	3'-9"	71.7	81.1	57.8	56.5	71.7	57.8	81.1	40.6
	4'-0"	67.2	76.1	54.1	52.9	67.2	54.1	76.1	38.0
	4'-1"	65.5	74.1	52.8	51.6	65.5	52.8	74.1	37.1
9'-0"	3'-6"	90.0	90.0	90.0	90.0	90.0	90.0	90.0	82.1
	4'-0"	90.0	90.0	90.0	90.0	90.0	90.0	90.0	71.8
	4'-6"	90.0	90.0	90.0	88.9	90.0	90.0	90.0	63.9
	5'-0"	90.0	90.0	81.8	80.0	90.0	81.8	90.0	57.5
	5'-6"	90.0	90.0	74.4	72.7	90.0	74.4	90.0	52.2
	6'-0"	84.6	90.0	68.2	66.7	84.6	68.2	90.0	47.9
	6'-6"	78.1	88.4	62.9	61.5	78.1	62.9	88.4	44.2
	7'-0"	72.5	82.1	58.4	57.1	72.5	58.4	82.1	41.1
	7'-6"	67.7	76.6	54.5	53.3	67.7	54.5	76.6	38.3
	8'-0"	63.5	71.8	51.1	50.0	63.5	51.1	71.8	35.9
	8'-2"	61.8	70.0	49.8	48.7	61.8	49.8	70.0	35.0
9'-6"	3'-6"	90.0	90.0	90.0	90.0	90.0	90.0	90.0	77.8
	4'-0"	90.0	90.0	90.0	90.0	90.0	90.0	90.0	68.1
	4'-6"	90.0	90.0	86.1	84.2	90.0	86.1	90.0	60.5
	5'-0"	90.0	90.0	77.5	75.8	90.0	77.5	90.0	54.4
	5'-6"	87.4	90.0	70.5	68.9	87.4	70.5	90.0	49.5
	6'-0"	80.2	90.0	64.6	63.2	80.2	64.6	90.0	45.4
	6'-6"	74.0	83.8	59.6	58.3	74.0	59.6	83.8	41.9
	7'-0"	68.7	77.8	55.4	54.1	68.7	55.4	77.8	38.9
	7'-6"	64.1	72.6	51.7	50.5	64.1	51.7	72.6	36.3
	8'-0"	60.1	68.1	48.4	47.4	60.1	48.4	68.1	34.0
	8'-2"	58.6	66.3	47.2	46.2	58.6	47.2	66.3	33.2
10'-0"	3'-6"	90.0	90.0	90.0	90.0	90.0	90.0	90.0	73.9
	4'-0"	90.0	90.0	90.0	90.0	90.0	90.0	90.0	64.7
	4'-6"	90.0	90.0	81.8	80.0	90.0	81.8	90.0	57.5
	5'-0"	90.0	90.0	73.6	72.0	90.0	73.6	90.0	51.7
	5'-6"	83.1	90.0	66.9	65.5	83.1	66.9	90.0	47.0
	6'-0"	76.2	86.2	61.4	60.0	76.2	61.4	86.2	43.1
	6'-6"	70.3	79.6	56.6	55.4	70.3	56.6	79.6	39.8
	7'-0"	65.3	73.9	52.6	51.4	65.3	52.6	73.9	36.9
	7'-6"	60.9	69.0	49.1	48.0	60.9	49.1	69.0	34.5
	8'-0"	57.1	64.7	46.0	45.0	57.1	46.0	64.7	32.3
	8'-2"	55.7	63.0	44.9	43.9	55.7	44.9	63.0	31.5

OPTION #4 : (5) FASTENERS CONNECTION

MAXIMUM MULLION SPAN "L" (Ft-In)	EFFECTIVE SPACING * "b" (Ft-In)	J (Poured Concrete)	K (Poured Concrete)	L (Poured Concrete)	M (Grout Filled C. Block)	N (Grout Filled C. Block)	O (Grout Filled C. Block)	P (Steel)	Q (Wood)
6'-2"	1'-9"	90.0	90.0	90.0	90.0	90.0	90.0	90.0	90.0
	2'-0"	90.0	90.0	90.0	90.0	90.0	90.0	90.0	90.0
	2'-3"	90.0	90.0	90.0	90.0	90.0	90.0	90.0	90.0
	2'-6"	90.0	90.0	90.0	90.0	90.0	90.0	90.0	90.0
	2'-9"	90.0	90.0	90.0	90.0	90.0	90.0	90.0	90.0
	3'-0"	90.0	90.0	90.0	90.0	90.0	90.0	90.0	87.4
	3'-3"	90.0	90.0	90.0	90.0	90.0	90.0	90.0	80.7
	3'-6"	90.0	90.0	90.0	90.0	90.0	90.0	90.0	74.9
	3'-9"	90.0	90.0	90.0	90.0	90.0	90.0	90.0	69.9
	4'-0"	90.0	90.0	90.0	90.0	90.0	90.0	90.0	65.5
	4'-1"	90.0	90.0	90.0	88.9	90.0	90.0	90.0	63.9
6'-6"	1'-9"	90.0	90.0	90.0	90.0	90.0	90.0	90.0	90.0
	2'-0"	90.0	90.0	90.0	90.0	90.0	90.0	90.0	90.0
	2'-3"	90.0	90.0	90.0	90.0	90.0	90.0	90.0	90.0
	2'-6"	90.0	90.0	90.0	90.0	90.0	90.0	90.0	90.0
	2'-9"	90.0	90.0	90.0	90.0	90.0	90.0	90.0	90.0
	3'-0"	90.0	90.0	90.0	90.0	90.0	90.0	90.0	82.9
	3'-3"	90.0	90.0	90.0	90.0	90.0	90.0	90.0	76.6
	3'-6"	90.0	90.0	90.0	90.0	90.0	90.0	90.0	71.1
	3'-9"	90.0	90.0	90.0	90.0	90.0	90.0	90.0	66.3
	4'-0"	90.0	90.0	88.5	86.5	90.0	88.5	90.0	62.2
	4'-1"	90.0	90.0	86.3	84.3	90.0	86.3	90.0	60.6
7'-0"	1'-9"	90.0	90.0	90.0	90.0	90.0	90.0	90.0	90.0
	2'-0"	90.0	90.0	90.0	90.0	90.0	90.0	90.0	90.0
	2'-3"	90.0	90.0	90.0	90.0	90.0	90.0	90.0	90.0
	2'-6"	90.0	90.0	90.0	90.0	90.0	90.0	90.0	90.0
	2'-9"	90.0	90.0	90.0	90.0	90.0	90.0	90.0	84.0
	3'-0"	90.0	90.0	90.0	90.0	90.0	90.0	90.0	77.0
	3'-3"	90.0	90.0	90.0	90.0	90.0	90.0	90.0	71.1
	3'-6"	90.0	90.0	90.0	90.0	90.0	90.0	90.0	66.0
	3'-9"	90.0	90.0	87.7	85.7	90.0	87.7	90.0	61.6
	4'-0"	90.0	90.0	82.2	80.4	90.0	82.2	90.0	57.7
	4'-1"	90.0	90.0	80.1	78.3	90.0	80.1	90.0	56.3
7'-6"	1'-9"	90.0	90.0	90.0	90.0	90.0	90.0	90.0	90.0
	2'-0"	90.0	90.0	90.0	90.0	90.0	90.0	90.0	90.0
	2'-3"	90.0	90.0	90.0	90.0	90.0	90.0	90.0	90.0
	2'-6"	90.0	90.0	90.0	90.0	90.0	90.0	90.0	86.2
	2'-9"	90.0	90.0	90.0	90.0	90.0	90.0	90.0	78.4
	3'-0"	90.0	90.0	90.0	90.0	90.0	90.0	90.0	71.8
	3'-3"	90.0	90.0	90.0	90.0	90.0	90.0	90.0	66.3
	3'-6"	90.0	90.0	87.7	85.7	90.0	87.7	90.0	61.6
	3'-9"	90.0	90.0	81.8	80.0	90.0	81.8	90.0	57.5
	4'-0"	90.0	90.0	76.7	75.0	90.0	76.7	90.0	53.9
	4'-1"	87.0	90.0	70.1	68.5	87.0	70.1	90.0	49.2
8'-0"	1'-9"	90.0	90.0	90.0	90.0	90.0	90.0	90.0	90.0
	2'-0"	90.0	90.0	90.0	90.0	90.0	90.0	90.0	90.0
	2'-3"	90.0	90.0	90.0	90.0	90.0	90.0	90.0	89.8
	2'-6"	90.0	90.0	90.0	90.0	90.0	90.0	90.0	80.8
	2'-9"	90.0	90.0	90.0	90.0	90.0	90.0	90.0	73.5
	3'-0"	90.0	90.0	90.0	90.0	90.0	90.0	90.0	67.4
	3'-3"	90.0	90.0	88.5	86.5	90.0	88.5	90.0	62.2
	3'-6"	90.0	90.0	82.2	80.4	90.0	82.2	90.0	57.7
	3'-9"	90.0	90.0	76.7	75.0	90.0	76.7	90.0	53.9
	4'-0"	89.2	90.0	71.9	70.3	89.2	71.9	90.0	50.5
	4'-1"	87.0	90.0	70.1	68.5	87.0	70.1	90.0	49.2
8'-6"	1'-9"	90.0	90.0	90.0	90.0	90.0	90.0	90.0	90.0
	2'-0"	90.0	90.0	90.0	90.0	90.0	90.0	90.0	90.0
	2'-3"	90.0	90.0	90.0	90.0	90.0	90.0	90.0	84.5
	2'-6"	90.0	90.0	90.0	90.0	90.0	90.0	90.0	76.1
	2'-9"	90.0	90.0	90.0	90.0	90.0	90.0	90.0	69.2
	3'-0"	90.0	90.0	90.0	88.2	90.0	90.0	90.0	63.4
	3'-3"	90.0	90.0	83.3	81.4	90.0	83.3	90.0	58.5
	3'-6"	90.0	90.0	77.3	75.8	90.0	77.3	90.0	54.3
	3'-9"	89.6	90.0	72.2	70.6	89.6	72.2	90.0	50.7
	4'-0"	84.0	90.0	67.7	66.2	84.0	67.7	90.0	47.5
	4'-1"	81.9	90.0	66.0	64.5	81.9	66.0	90.0	46.3
9'-0"	3'-6"	90.0	90.0	90.0	90.0	90.0	90.0	90.0	90.0
	4'-0"	90.0	90.0	90.0	90.0	90.0	90.0	90.0	89.8
	4'-6"	90.0	90.0	90.0	90.0	90.0	90.0	90.0	79.8
	5'-0"	90.0	90.0	90.0	90.0	90.0	90.0	90.0	71.8
	5'-6"	90.0	90.0	90.0	90.0	90.0	90.0	90.0	65.3
	6'-0"	90.0	90.0	85.2	83.3	90.0	85.2	90.0	59.9
	6'-6"	90.0	90.0	78.7	76.9	90.0	78.7	90.0	55.3
	7'-0"	90.0	90.0	73.1	71.4	90.0	73.1	90.0	51.3
	7'-6"	84.6	90.0	68.2	66.7	84.6	68.2	90.0	47.9
	8'-0"	79.3	89.8	63.9	62.5	79.3	63.9	89.8	44.9
	8'-2"	77.3	87.5	62.3	60.9	77.3	62.3	87.5	43.8
9'-6"	3'-6"	90.0	90.0	90.0	90.0	90.0	90.0	90.0	90.0
	4'-0"	90.0	90.0	90.0	90.0	90.0	90.0	90.0	85.1
	4'-6"	90.0	90.0	90.0	90.0	90.0	90.0	90.0	75.6
	5'-0"	90.0	90.0	90.0	90.0	90.0	90.0	90.0	68.1
	5'-6"	90.0	90.0	88.1	86.1	90.0	88.1	90.0	61.9
	6'-0"	90.0	90.0	80.7	78.9	90.0	80.7	90.0	56.7
	6'-6"	90.0	90.0	74.5	72.9	90.0	74.5	90.0	52.4
	7'-0"	85.9	90.0	69.2	67.7	85.9	69.2	90.0	48.6
	7'-6"	80.2	90.0	64.6	63.2	80.2	64.6	90.0	45.4
	8'-0"	75.1	85.1	60.6	59.2	75.1	60.6	86.1	42.5
	8'-2"	73.2	82.9	59.0	57.7	73.2	59.0	82.9	41.5
10'-0"	3'-6"	90.0	90.0	90.0	90.0	90.0	90.0	90.0	90.0
	4'-0"	90.0	90.0	90.0	90.0	90.0	90.0	90.0	80.8
	4'-6"	90.0	90.0	90.0	90.0	90.0	90.0	90.0	71.8
	5'-0"	90.0	90.0	90.0	90.0	90.0	90.0	90.0	64.7
	5'-6"	90.0	90.0	83.7	81.8	90.0	83.7	90.0	58.8
	6'-0"	90.0	90.0	76.7	75.0	90.0	76.7	90.0	53.9
	6'-6"	87.9	90.0	70.8	69.2	87.9	70.8	90.0	49.7
	7'-0"	81.6	90.0	65.7	64.3	81.6	65.7	90.0	46.2
	7'-6"	76.2	86.2	61.4	60.0	76.2	61.4	86.2	43.1
	8'-0"	71.4	80.8	57.5	56.3	71.4	57.5	80.8	40.4
	8'-2"	69.6	78.8	56.1	54.8	69.6	56.1	78.8	39.4

■ MIN. SPACING (spcg.) REQUIRED FOR DIFFERENT SUBSTRATES

- POURED CONCRETE: 4 1/2" MIN. O.C.
- GROUT FILLED C.B.: 8" MIN. O.C.
- STEEL: 4 1/2" MIN. O.C.
- WOOD: 2" MIN. O.C.

OPTION # 1 (ELEVATION)
(2) FASTENERS CONNECTION

OPTION # 2 (ELEVATION)
(3) FASTENERS CONNECTION

OPTION # 3 (ELEVATION)
(4) FASTENERS CONNECTION

OPTION # 4 (ELEVATION)
(5) FASTENERS CONNECTION

(C) FASTENERS TYPES AND SUBSTRATES REQUIREMENTS W/ 2 3/4" MIN. E.D., BEYOND ANY FINISH MATERIAL (except as noted)

J - 3/8"Ø HILTI KWIK BOLT 3 ANCHOR W/ 2" Min. EMBEDMENT INTO 6" Min. THICK POURED CONCRETE (Min. fc = 3 ksi).

K - 3/8"Ø POWER FASTENERS TAPPER ANCHOR W/ 1 3/4" Min. EMBEDMENT INTO POURED CONCRETE (Min. fc = 3 ksi) .

L - 3/8"Ø HILTI HUS-H SCREW ANCHOR W/ 2" Min. EMBEDMENT INTO POURED CONCRETE (Min. fc = 3 ksi) .

M - 3/8"Ø POWER FASTENERS TAPPER ANCHOR W/ 1 3/4" Min. EMBEDMENT INTO GROUT FILLED CONCRETE BLOCK.

N - 3/8"Ø HILTI KWIK-BOLT 3 ANCHOR W/ 2 1/2" Min. EMBEDMENT INTO GROUT FILLED CONCRETE BLOCK .

O - 3/8"Ø HILTI HUS-H SCREW ANCHOR W/ 2 3/4" Min. EMBEDMENT INTO GROUT FILLED CONCRETE BLOCK .

P - 3/8"Ø TYPE "F" BOLT OR 3/8"Ø -13 SAE GRADE 5 GALVANIZED STEEL HHB THRU BOLT W/ NUT & LOCK WASHER & 1 3/4" MIN. EDGE DISTANCE TO 1/4" Min. THK. ASTM A-36 OR 12 GAGE (0.108" MIN. THK.) Fy=33 ksi STEEL .

Q - 3/8"Ø LAG SCREWS TO DOUBLE 2 x WOOD BUCK (G=0.55) W/ 3" Min. PENETRATION INTO WOOD & 2" MIN. EDGE DISTANCE , BEYOND ANY FINISH MATERIAL.

FLORIDA BUILDING CODE (High Velocity Hurricane Zone)

SERIES FG-5000 FLUSH GLAZED ALUMINUM WINDOW WALL SYSTEM
LARGE & SMALL MISSILE IMPACT LAMINATED GLASS

Oldcastle BuildingEnvelope™
803 Airport Rd - Terrell, TX 75160
www.OldcastleBE.com - Phone 800-869-4567

DRAWN BY: L.G./M.C.V./A.G.
12/01/11 DATE
11-196 DRAWING No
SHEET 19 OF 22

REV. No	DESCRIPTION	DATE	REV. No	DESCRIPTION	DATE
1	OLD 10-076	12/01/11	3		
2			4		

©2011 TILTECO, INC

TILTECO INC.
TILLIT TESTING & ENGINEERING COMPANY
6355 N.W. 36th. St., Ste. 305, VIRGINIA GARDENS, FL 33166
Phone : (305)871-1530 . Fax : (305)871-1531
e-mail: tilteco@aol.com
EB-0006719
WALTER A. TILLIT Jr., P.E.
FLORIDA Lic. # 44167

WALTER A. TILLIT JR. LICENSE No. 44167 STATE OF FLORIDA PROFESSIONAL ENGINEER

P.E. SEAL/SIGNATURE/DATE

PRODUCT REVISED
as complying with the Florida Building Code
Acceptance No 12-0109.06
Expiration Date Nov. 19, 2014
By
Miami-Dade Product Control

MIAMI-DADE COUNTY

MAXIMUM A.S.D. DESIGN PRESSURE RATING SCHEDULE FOR JAMBS FASTENED W/ 1/2"Ø FASTENERS

(C) * SEE SHEET 13 FOR DEFINITION OF b

MAXIMUM MULLION SPAN	EFFECTIVE SPACING *	OPTION #1 : (1) FASTENER CONNECTION						OPTION #2 : (2) FASTENERS CONNECTION						OPTION #3 : (3) FASTENERS CONNECTION						OPTION #4 : (4) FASTENERS CONNECTION					
		POURED CONCRETE		GROUT FILLED C. BLOCK		STEEL	WOOD	POURED CONCRETE		GROUT FILLED C. BLOCK		STEEL	WOOD	POURED CONCRETE		GROUT FILLED C. BLOCK		STEEL	WOOD	POURED CONCRETE		GROUT FILLED C. BLOCK		STEEL	WOOD
"L" (Ft-In)	"b" (Ft-In)	R	S	T	U	V	W	R	S	T	U	V	W	R	S	T	U	V	W	R	S	T	U	V	W
6'-2"	1'-9"	90.0	90.0	57.5	88.0	90.0	54.0	90.0	90.0	90.0	90.0	90.0	90.0	90.0	90.0	90.0	90.0	90.0	90.0	90.0	90.0	90.0	90.0	90.0	90.0
	2'-0"	90.0	90.0	50.3	77.0	90.0	47.3	90.0	90.0	90.0	90.0	90.0	90.0	90.0	90.0	90.0	90.0	90.0	90.0	90.0	90.0	90.0	90.0	90.0	90.0
	2'-3"	90.0	87.9	44.7	68.5	90.0	42.0	90.0	90.0	89.4	90.0	90.0	84.0	90.0	90.0	90.0	90.0	90.0	90.0	90.0	90.0	90.0	90.0	90.0	90.0
	2'-6"	84.8	79.1	40.2	61.6	90.0	37.8	90.0	90.0	80.4	90.0	90.0	75.6	90.0	90.0	90.0	90.0	90.0	90.0	90.0	90.0	90.0	90.0	90.0	90.0
	2'-9"	77.1	71.9	36.6	56.0	87.3	34.4	90.0	90.0	73.1	90.0	90.0	68.8	90.0	90.0	90.0	90.0	90.0	90.0	90.0	90.0	90.0	90.0	90.0	90.0
	3'-0"	70.7	65.9	33.5	51.4	80.0	31.5	90.0	90.0	67.0	90.0	90.0	63.0	90.0	90.0	90.0	90.0	90.0	90.0	90.0	90.0	90.0	90.0	90.0	90.0
	3'-3"	65.3	60.8	30.9	47.4	73.9	29.1	90.0	90.0	61.9	90.0	90.0	58.2	90.0	90.0	90.0	90.0	90.0	87.3	90.0	90.0	90.0	90.0	90.0	90.0
	3'-6"	60.6	56.5	28.7	44.0	68.6	27.0	90.0	90.0	57.5	88.0	90.0	54.0	90.0	90.0	86.2	90.0	90.0	81.0	90.0	90.0	90.0	90.0	90.0	90.0
	3'-9"	56.6	52.7	26.8	41.1	64.0	25.2	90.0	90.0	53.6	82.2	90.0	50.4	90.0	90.0	80.4	90.0	90.0	75.6	90.0	90.0	90.0	90.0	90.0	90.0
	4'-0"	53.0	49.4	25.1	38.5	60.0	23.6	90.0	90.0	50.3	77.0	90.0	47.3	90.0	90.0	75.4	90.0	90.0	70.9	90.0	90.0	90.0	90.0	90.0	90.0
	4'-1"	51.7	48.2	24.5	37.5	58.5	23.0	90.0	90.0	49.0	75.1	90.0	46.1	90.0	90.0	73.5	90.0	90.0	69.1	90.0	90.0	90.0	90.0	90.0	90.0
6'-6"	1'-9"	90.0	90.0	54.5	83.5	90.0	51.3	90.0	90.0	90.0	90.0	90.0	90.0	90.0	90.0	90.0	90.0	90.0	90.0	90.0	90.0	90.0	90.0	90.0	90.0
	2'-0"	90.0	90.0	47.7	73.1	90.0	44.9	90.0	90.0	90.0	90.0	90.0	89.7	90.0	90.0	90.0	90.0	90.0	90.0	90.0	90.0	90.0	90.0	90.0	90.0
	2'-3"	89.4	83.4	42.4	65.0	90.0	39.9	90.0	90.0	84.8	90.0	90.0	79.7	90.0	90.0	90.0	90.0	90.0	90.0	90.0	90.0	90.0	90.0	90.0	90.0
	2'-6"	80.5	75.0	38.2	58.5	90.0	35.9	90.0	90.0	76.3	90.0	90.0	71.8	90.0	90.0	90.0	90.0	90.0	90.0	90.0	90.0	90.0	90.0	90.0	90.0
	2'-9"	73.2	68.2	34.7	53.1	82.8	32.6	90.0	90.0	69.4	90.0	90.0	65.2	90.0	90.0	90.0	90.0	90.0	90.0	90.0	90.0	90.0	90.0	90.0	90.0
	3'-0"	67.1	62.5	31.8	48.7	75.9	29.9	90.0	90.0	63.6	90.0	90.0	59.8	90.0	90.0	90.0	90.0	90.0	89.7	90.0	90.0	90.0	90.0	90.0	90.0
	3'-3"	61.9	57.7	29.3	45.0	70.1	27.6	90.0	90.0	58.7	89.9	90.0	55.2	90.0	90.0	88.0	90.0	90.0	82.8	90.0	90.0	90.0	90.0	90.0	90.0
	3'-6"	57.5	53.6	27.3	41.8	65.1	25.6	90.0	90.0	54.5	83.5	90.0	51.3	90.0	90.0	81.8	90.0	90.0	76.9	90.0	90.0	90.0	90.0	90.0	90.0
	3'-9"	53.7	50.0	25.4	39.0	60.7	23.9	90.0	90.0	50.9	77.9	90.0	47.8	90.0	90.0	76.3	90.0	90.0	71.8	90.0	90.0	90.0	90.0	90.0	90.0
	4'-0"	50.3	46.9	23.8	36.5	56.9	22.4	90.0	90.0	47.7	73.1	90.0	44.9	90.0	90.0	71.5	90.0	90.0	67.3	90.0	90.0	90.0	90.0	90.0	89.7
	4'-1"	49.0	45.7	23.2	35.6	55.5	21.9	90.0	90.0	46.5	71.2	90.0	43.7	90.0	90.0	69.7	90.0	90.0	65.6	90.0	90.0	90.0	90.0	90.0	87.4
7'-0"	1'-9"	90.0	90.0	50.6	77.6	90.0	47.6	90.0	90.0	90.0	90.0	90.0	90.0	90.0	90.0	90.0	90.0	90.0	90.0	90.0	90.0	90.0	90.0	90.0	90.0
	2'-0"	90.0	87.1	44.3	67.9	90.0	41.6	90.0	90.0	88.6	90.0	90.0	83.3	90.0	90.0	90.0	90.0	90.0	90.0	90.0	90.0	90.0	90.0	90.0	90.0
	2'-3"	83.0	77.4	39.4	60.3	90.0	37.0	90.0	90.0	78.7	90.0	90.0	74.0	90.0	90.0	90.0	90.0	90.0	90.0	90.0	90.0	90.0	90.0	90.0	90.0
	2'-6"	74.7	69.7	35.4	54.3	84.6	33.3	90.0	90.0	70.9	90.0	90.0	66.6	90.0	90.0	90.0	90.0	90.0	90.0	90.0	90.0	90.0	90.0	90.0	90.0
	2'-9"	67.9	63.3	32.2	49.4	76.9	30.3	90.0	90.0	64.4	90.0	90.0	60.6	90.0	90.0	90.0	90.0	90.0	90.0	90.0	90.0	90.0	90.0	90.0	90.0
	3'-0"	62.3	58.1	29.5	45.2	70.5	27.8	90.0	90.0	59.0	90.0	90.0	55.5	90.0	90.0	88.6	90.0	90.0	83.3	90.0	90.0	90.0	90.0	90.0	90.0
	3'-3"	57.5	53.6	27.3	41.8	65.1	25.6	90.0	90.0	54.5	83.5	90.0	51.3	90.0	90.0	81.8	90.0	90.0	76.9	90.0	90.0	90.0	90.0	90.0	90.0
	3'-6"	53.4	49.8	25.3	38.8	60.4	23.8	90.0	90.0	50.6	77.6	90.0	47.6	90.0	90.0	75.9	90.0	90.0	71.4	90.0	90.0	90.0	90.0	90.0	90.0
	3'-9"	49.8	46.4	23.6	36.2	56.4	22.2	90.0	90.0	47.2	72.4	90.0	44.4	90.0	90.0	70.9	90.0	90.0	66.6	90.0	90.0	90.0	90.0	90.0	88.9
	4'-0"	46.7	43.5	22.1	33.9	52.9	20.8	90.0	87.1	44.3	67.9	90.0	41.6	90.0	90.0	66.4	90.0	90.0	62.5	90.0	90.0	88.6	90.0	90.0	83.3
	4'-1"	45.5	42.4	21.6	33.1	51.5	20.3	90.0	84.9	43.2	66.1	90.0	40.6	90.0	90.0	64.7	90.0	90.0	60.9	90.0	90.0	86.3	90.0	90.0	81.2
7'-6"	1'-9"	90.0	90.0	47.2	72.4	90.0	44.4	90.0	90.0	90.0	90.0	90.0	88.9	90.0	90.0	90.0	90.0	90.0	90.0	90.0	90.0	90.0	90.0	90.0	90.0
	2'-0"	87.2	81.3	41.3	63.3	90.0	38.9	90.0	90.0	82.7	90.0	90.0	77.7	90.0	90.0	90.0	90.0	90.0	90.0	90.0	90.0	90.0	90.0	90.0	90.0
	2'-3"	77.5	72.2	36.7	56.3	87.7	34.6	90.0	90.0	73.5	90.0	90.0	69.1	90.0	90.0	90.0	90.0	90.0	90.0	90.0	90.0	90.0	90.0	90.0	90.0
	2'-6"	69.7	65.0	33.1	50.7	79.0	31.1	90.0	90.0	66.1	90.0	90.0	62.2	90.0	90.0	90.0	90.0	90.0	90.0	90.0	90.0	90.0	90.0	90.0	90.0
	2'-9"	63.4	59.1	30.1	46.1	71.8	28.3	90.0	90.0	60.1	90.0	90.0	56.5	90.0	90.0	90.0	90.0	90.0	84.8	90.0	90.0	90.0	90.0	90.0	90.0
	3'-0"	58.1	54.2	27.6	42.2	65.8	25.9	90.0	90.0	55.1	84.4	90.0	51.8	90.0	90.0	82.7	90.0	90.0	77.7	90.0	90.0	90.0	90.0	90.0	90.0
	3'-3"	53.7	50.0	25.4	39.0	60.7	23.9	90.0	90.0	50.9	77.9	90.0	47.8	90.0	90.0	76.3	90.0	90.0	71.8	90.0	90.0	90.0	90.0	90.0	90.0
	3'-6"	49.8	46.4	23.6	36.2	56.4	22.2	90.0	90.0	47.2	72.4	90.0	44.4	90.0	90.0	70.9	90.0	90.0	66.6	90.0	90.0	90.0	90.0	90.0	88.9
	3'-9"	46.5	43.3	22.0	33.8	52.6	20.7	90.0	86.7	44.1	67.6	90.0	41.5	90.0	90.0	66.1	90.0	90.0	62.2	90.0	90.0	88.2	90.0	90.0	82.9
	4'-0"	43.6	40.6	20.7	31.7	49.3	19.4	87.2	81.3	41.3	63.3	90.0	38.9	90.0	90.0	62.0	90.0	90.0	58.3	90.0	90.0	82.7	90.0	90.0	77.7
	4'-1"	42.5	39.6	20.1	30.9	48.1	18.9	85.0	79.2	40.3	61.7	90.0	37.9	90.0	90.0	60.4	90.0	90.0	56.8	90.0	90.0	80.6	90.0	90.0	75.8
8'-0"	1'-9"	90.0	87.1	44.3	67.9	90.0	41.6	90.0	90.0	88.6	90.0	90.0	83.3	90.0	90.0	90.0	90.0	90.0	90.0	90.0	90.0	90.0	90.0	90.0	90.0
	2'-0"	81.7	76.2	38.8	59.4	90.0	36.4	90.0	90.0	77.5	90.0	90.0	72.9	90.0	90.0	90.0	90.0	90.0	90.0	90.0	90.0	90.0	90.0	90.0	90.0
	2'-3"	72.7	67.7	34.4	52.8	82.2	32.4	90.0	90.0	68.9	90.0	90.0	64.8	90.0	90.0	90.0	90.0	90.0	90.0	90.0	90.0	90.0	90.0	90.0	90.0
	2'-6"	65.4	61.0	31.0	47.5	74.0	29.2	90.0	90.0	62.0	90.0	90.0	58.3	90.0	90.0	90.0	90.0	90.0	87.5	90.0	90.0	90.0	90.0	90.0	90.0
	2'-9"	59.4	55.4	28.2	43.2	67.3	26.5	90.0	90.0	56.4	86.4	90.0	53.0	90.0	90.0	84.5	90.0	90.0	79.5	90.0	90.0	90.0	90.0	90.0	90.0
	3'-0"	54.5	50.8	25.8	39.6	61.7	24.3	90.0	90.0	51.7	79.2	90.0	48.6	90.0	90.0	77.5	90.0	90.0	72.9	90.0	90.0	90.0	90.0	90.0	90.0
	3'-3"	50.3	46.9	23.8	36.5	56.9	22.4	90.0	90.0	47.7	73.1	90.0	44.9	90.0	90.0	71.5	90.0	90.0	67.3	90.0	90.0	90.0	90.0	90.0	89.7
	3'-6"	46.7	43.5	22.1	33.9	52.9	20.8	90.0	87.1	44.3	67.9	90.0	41.6	90.0	90.0	66.4	90.0	90.0	62.5	90.0	90.0	88.6	90.0	90.0	83.3
	3'-9"	43.6	40.6	20.7	31.7	49.3	19.4	87.2	81.3	41.3	63.3	90.0	38.9	90.0	90.0	62.0	90.0	90.0	58.3	90.0	90.0	82.7	90.0	90.0	77.7
	4'-0"	40.9	38.1	19.4	29.7	46.3	18.2	81.7	76.2	38.8	59.4	90.0	36.4	90.0	90.0	58.1	89.1	90.0	54.7	90.0	90.0	77.5	90.0	90.0	72.9
	4'-1"	39.8	37.1	18.9	28.9	45.1	17.8	79.7	74.3	37.8	57.9	90.0	35.5	90.0	90.0	56.6	86.8	90.0	53.3	90.0	90.0	75.5	90.0	90.0	71.0
8'-6"	1'-9"	87.9	82.0	41.7	63.9	90.0	39.2	90.0	90.0	83.4	90.0	90.0	78.4	90.0	90.0	90.0	90.0	90.0	90.0	90.0	90.0	90.0	90.0	90.0	90.0
	2'-0"	76.9	71.7	36.5	55.9	87.1	34.3	90.0	90.0	72.9	90.0	90.0	68.6	90.0	90.0	90.0	90.0	90.0	90.0	90.0	90.0	90.0	90.0	90.0	90.0
	2'-3"	68.4	63.7	32.4	49.7	77.4	30.5	90.0	90.0	64.8	90.0	90.0	61.0	90.0	90.0	90.0	90.0	90.0	90.0	90.0	90.0	90.0	90.0	90.0	90.0
	2'-6"	61.5	57.4	29.2	44.7	69.7	27.4	90.0	90.0	58.4	89.4	90.0	54.9	90.0	90.0	87.5	90.0	90.0	82.3	90.0	90.0	90.0	90.0	90.0	90.0
	2'-9"	55.9	52.2	26.5	40.6	63.3	24.9	90.0	90.0	53.0	81.3	90.0	49.9	90.0	90.0	79.6	90.0	90.0	74.8	90.0	90.0	90.0	90.0	90.0	90.0
	3'-0"	51.3	47.8	24.3	37.3	58.1	22.9	90.0	90.0	48.6	74.5	90.0	45.7	90.0	90.0	72.9	90.0	90.0	68.6	90.0	90.0	90.0	90.0	90.0	90.0
	3'-3"	47.3	44.1	22.4	34.4	53.6	21.1	90.0	88.3	44.9	68.8	90.0	42.2	90.0	90.0	67.3	90.0	90.0	63.3	90.0	90.0	89.8	90.0	90.0	84.4
	3'-6"	44.0	41.0	20.8	31.9	49.8	19.6	87.9	82.0	41.7	63.9	90.0	39.2	90.0	90.0	62.5	90.0	90.0	58.8	90.0	90.0	83.4	90.0	90.0	78.4
	3'-9"	41.0	38.2	19.5	29.8	46.4	18.3	82.1	76.5	38.9	59.6	90.0	36.6	90.0	90.0	58.4	89.4	90.0	54.9	90.0	90.0	77.8	90.0	90.0	73.2
	4'-0"	38.5	35.9	18.2	27.9	43.5	17.1	76.9	71.7	36.5	55.9	87.1	34.3	90.0	90.0	54.7	83.8	90.0	51.4	90.0	90.0	72.9	90.0	90.0	68.6
	4'-1"	37.5	34.9	17.8	27.2	42.4	16.7	75.0	69.9	35.5	54.5	84.9	33.4	90.0	90.0	53.3	81.7	90.0	50.1	90.0	90.0	71.1	90.0	90.0	66.9
9'-0"	3'-6"	83.0	77.4	39.4	60.3	90.0	37.0	90.0	90.0	78.7	90.0	90.0	74.0	90.0	90.0	90.0	90.0	90.0	90.0	90.0	90.0	90.0	90.0	90.0	90.0
	4'-0"	72.7	67.7	34.4	52.8	82.2	32.4	90.0	90.0	68.9	90.0	90.0	64.8	90.0	90.0	90.0	90.0	90.0	90.0	90.0	90.0	90.0	90.0	90.0	90.0
	4'-6"	64.6	60.2	30.6	46.9	73.1	28.8	90.0	90.0	61.2	90.0	90.0	57.6	90.0	90.0	90.0	90.0	90.0	86.4	90.0	90.0	90.0	90.0	90.0	90.0
	5'-0"	58.1	54.2	27.6	42.2	65.8	25.9	90.0	90.0	55.1	84.4	90.0	51.8	90.0	90.0	82.7	90.0	90.0	77.7	90.0	90.0	90.0	90.0	90.0	90.0
	5'-6"	52.8	49.3	25.1	38.4	59.8	23.6	90.0	90.0	50.1	76.8	90.0	47.1	90.0	90.0	75.2	90.0	90.0	70.7	90.0	90.0	90.0	90.0	90.0	90.0
	6'-0"	48.4	45.2	23.0	35.2	54.8	21.6	90.0	90.0	45.9	70.4	90.0	43.2	90.0	90.0	68.9	90.0	90.0	64.8	90.0	90.0	90.0	90.0	90.0	86.4
	6'-6"	44.7	41.7	21.2	32.5	50.6	19.9	89.4	83.4	42.4	65.0	90.0	39.9	90.0	90.0	63.6	90.0	90.0	59.8	90.0	90.0	84.8	90.0	90.0	79.7
	7'-0"	41.5	38.7	19.7	30.2	47.0	18.5	83.0	77.4	39.4	60.3	90.0	37.0	90.0	90.0	59.0	90.0	90.0	55.5	90.0	90.0	78.7	90.0	90.0	74.0
	7'-6"	38.7	36.1	18.4	28.1	43.9	17.3	77.5	72.2	36.7	56.3	87.7	34.6	90.0	90.0	55.1	84.4	90.0	51.8	90.0	90.0	73.5	90.0	90.0	69.1
	8'-0"	36.3	33.9	17.2	26.4	41.1	16.2	72.7	67.7	34.4	52.8	82.2	32.4	90.0	90.0	51.7	79.2	90.0	48.6	90.0	90.0	68.9	90.0	90.0	64.8
	8'-2"	35.4	33.0	16.8	25.7	40.1	15.8	70.8	66.0	33.6	51.4	80.2	31.6	90.0	90.0	50.4	77.2	90.0	47.4	90.0	90.0	67.1	90.0	90.0	63.1
9'-6"	3'-6"	78.7	73.3	37.3	57.1	89.1	35.1	90.0	90.0	74.6	90.0	90.0	70.1	90.0	90.0	90.0	90.0	90.0	90.0	90.0	90.0	90.0	90.0	90.0	90.0
	4'-0"	68.8	64.2	32.6	50.0	77.9	30.7	90.0	90.0	65.3	90.0	90.0	61.4	90.0	90.0	90.0	90.0	90.0	90.0	90.0	90.0	90.0	90.0	90.0	90.0
	4'-6"	61.2	57.0	29.0	44.4	69.3	27.3	90.0	90.0	58.0	88.9	90.0	54.6	90.0	90.0	87.0	90.0	90.0	81.8	90.0	90.0	90.0	90.0	90.0	90.0
	5'-0"	55.1	51.3	26.1	40.0	62.3	24.6	90.0	90.0	52.2	80.0	90.0	49.1	90.0	90.0	78.3	90.0	90.0	73.7	90.0	90.0	90.0	90.0	90.0	90.0
	5'-6"	50.1	46.7	23.7	36.4	56.7	22.3	90.0	90.0	47.5	72.7	90.0	44.6	90.0	90.0	71.2	90.0	90.0	67.0	90.0	90.0	90.0	90.0	90.0	89.3
	6'-0"	45.9	42.8	21.8	33.3	51.9	20.5	90.0	85.6	43.5	66.7	90.0	40.9	90.0	90.0	65.3	90.0	90.0	61.4	90.0	90.0	87.0	90.0	90.0	81.8
	6'-6"	42.4	39.5	20.1	30.8	48.0	18.9	84.7	79.0	40.2	61.5	90.0	37.8	90.0	90.0	60.2	90.0	90.0	56.7	90.0	90.0	80.3	90.0	90.0	75.5
	7'-0"	39.3	36.7	18.6	28.6	44.5	17.5	78.7	73.3	37.3	57.1	89.1	35.1	90.0	90.0	55.9	85.7	90.0	52.6	90.0	90.0	74.6	90.0	90.0	70.1
	7'-6"	36.7	34.2	17.4	26.7	41.6	16.4	73.4	68.4	34.8	53.3	83.1	32.7	90.0	90.0	52.2	80.0	90.0	49.1	90.0	90.0	69.6	90.0	90.0	65.5
	8'-0"	34.4	32.1	16.3	25.0	39.0	15.3	68.8	64.2	32.6	50.0	77.9	30.7	90.0	90.0	48.9	75.0	90.0	46.0	90.0	90.0	65.3	90.0	90.0	61.4
	8'-2"	33.5	31.3	15.9	24.4	38.0	15.0	67.1	62.5	31.8	48.7	75.9	29.9	90.0	90.0	47.7	73.1	90.0	44.9	90.0	90.0	63.6	90.0	90.0	59.8
10'-0"	3'-6"	74.7	69.7	35.4	54.3	84.6	33.3	90.0	90.0	70.9	90.0	90.0	66.6	90.0	90.0	90.0	90.0	90.0	90.0	90.0	90.0	90.0	90.0	90.0	90.0
	4'-0"	65.4	61.0	31.0	47.5	74.0	29.2	90.0	90.0	62.0	90.0	90.0	58.3	90.0	90.0	90.0	90.0	90.0	87.5	90.0	90.0	90.0	90.0	90.0	90.0
	4'-6"	58.1	54.2	27.6	42.2	65.8	25.9	90.0	90.0	55.1	84.4	90.0	51.8	90.0	90.0	82.7	90.0	90.0	77.7	90.0	90.0	90.0	90.0	90.0	90.0
	5'-0"	52.3	48.8	24.8	38.0	59.2	23.3	90.0	90.0	49.6	76.0	90.0	46.6	90.0	90.0	74.4	90.0	90.0	70.0	90.0	90.0	90.0	90.0	90.0	90.0
	5'-6"	47.6	44.3	22.5	34.5	53.8	21.2	90.0	88.7	45.1	69.1	90.0	42.4	90.0	90.0	67.6	90.0	90.0	63.6	90.0	90.0	90.0	90.0	90.0	84.8
	6'-0"	43.6	40.6	20.7	31.7	49.3	19.4	87.2	81.3	41.3	63.3	90.0	38.9	90.0	90.0	62.0	90.0	90.0	58.3	90.0	90.0	82.7	90.0	90.0	77.7
	6'-6"	40.2	37.5	19.1	29.2	45.6	17.9	80.5	75.0	38.2	58.5	90.0	35.9	90.0	90.0	57.2	87.7	90.0	53.8	90.0	90.0	76.3	90.0	90.0	71.8
	7'-0"	37.4	34.8	17.7	27.1	42.3	16.7	74.7	69.7	35.4	54.3	84.6	33.3	90.0	90.0	53.1	81.4	90.0	50.0	90.0	90.0	70.9	90.0	90.0	66.6
	7'-6"	34.9	32.5	16.5	25.3	39.5	15.5	69.7	65.0	33.1	50.7	79.0	31.1	90.0	90.0	49.6	76.0	90.0	46.6	90.0	90.0	66.1	90.0	90.0	62.2
	8'-0"	32.7	30.5	15.5	23.8	37.0	14.6	65.4	61.0	31.0	47.5	74.0	29.2	90.0	90.0	46.5	71.3	90.0	43.7	90.0	90.0	62.0	90.0	90.0	58.3
	8'-2"	31.9	29.7	15.1	23.1	36.1	14.2	63.7	59.4	30.2	46.3	72.1	28.4	90.0	89.1	45.3	69.4	90.0	42.6	90.0	90.0	60.4	90.0	90.0	56.8

■ MIN. SPACING (spcg.) REQUIRED FOR DIFFERENT SUBSTRATES

- POURED CONCRETE: 4 1/2" MIN. O.C.
- GROUT FILLED C.B.: 8" MIN. O.C.
- STEEL: 4 1/2" MIN. O.C.
- WOOD: 2" MIN. O.C.

OPTION # 1 (ELEVATION)
(1) FASTENER CONNECTION

OPTION # 2 (ELEVATION)
(2) FASTENERS CONNECTION

OPTION # 3 (ELEVATION)
(3) FASTENERS CONNECTION

OPTION # 4 (ELEVATION)
(4) FASTENERS CONNECTION

(C) FASTENERS TYPES AND SUBSTRATES REQUIREMENTS W/ 2 3/4" MIN. E.D., BEYOND ANY FINISH MATERIAL (except as noted)

R - 1/2"Ø HILTI KWIK BOLT 3 ANCHOR W/ 2" Min. EMBEDMENT INTO 6" Min. THICK POURED CONCRETE (Min. f'c = 3 ksi).

S - 1/2"Ø HILTI HUS-H SCREW ANCHOR W/ 3" Min. EMBEDMENT INTO POURED CONCRETE (Min. f'c = 3 ksi).

T - 1/2"Ø HILTI KWIK BOLT 3 ANCHOR W/ 2 1/2" Min. EMBEDMENT INTO GROUT FILLED CONCRETE BLOCK.

U - 1/2"Ø HILTI HUS-H SCREW ANCHOR W/ 3" Min. EMBEDMENT INTO GROUT FILLED CONCRETE BLOCK.

V - 1/2"Ø TYPE "F" BOLT OR 1/2"Ø -13 SAE GRADE 5 GALVANIZED STEEL HHB THRU BOLT W/ NUT & LOCK WASHER & 2" MIN. EDGE DISTANCE TO 1/4" Min. THK. ASTM A-36 OR 12 GAGE (0.108" MIN. THK.) Fy=33 ksi STEEL.

W - 1/2"Ø LAG SCREWS TO DOUBLE 2 x WOOD BUCK (G=0.55) W/ 3" Min. PENETRATION INTO WOOD & 2" MIN. EDGE DISTANCE, BEYOND ANY FINISH MATERIAL.

FLORIDA BUILDING CODE (High Velocity Hurricane Zone)

DRAWN BY: L.G./M.C.V./A.G.
12/01/11 DATE
11-196 DRAWING No
SHEET 20 OF 22

SERIES FG-5000 FLUSH GLAZED ALUMINUM WINDOW WALL SYSTEM
LARGE & SMALL MISSILE IMPACT LAMINATED GLASS

Oldcastle BuildingEnvelope™
803 Airport Rd - Terrell, TX 75160
www.OldcastleBE.com - Phone 800-869-4567

REV. No	DESCRIPTION	DATE	REV. No	DESCRIPTION	DATE
1	OLD 10-076	12/01/11	3		
2			4		

©2011 TILTECO, INC

TILTECO INC.
TILLIT TESTING & ENGINEERING COMPANY
6355 N.W. 36th. St., Ste. 305, VIRGINIA GARDENS, FL 33166
Phone: (305)871-1530. Fax: (305)871-1531
e-mail: tilteco@aol.com
EB-0006719
WALTER A. TILLIT Jr. P.E.
FLORIDA Lic. # 44167

WALTER A. TILLIT JR. LICENSE No. 44167 STATE OF FLORIDA PROFESSIONAL ENGINEER

P.E. SEAL/SIGNATURE/DATE

PRODUCT REVISED as complying with the Florida Building Code
Acceptance No 12-0109.06
Expiration Date Nov. 18, 2014
By [signature]
Miami Dade Product Control

MIAMI-DADE COUNTY

CORNER DETAIL AT JAMB

EXTERIOR

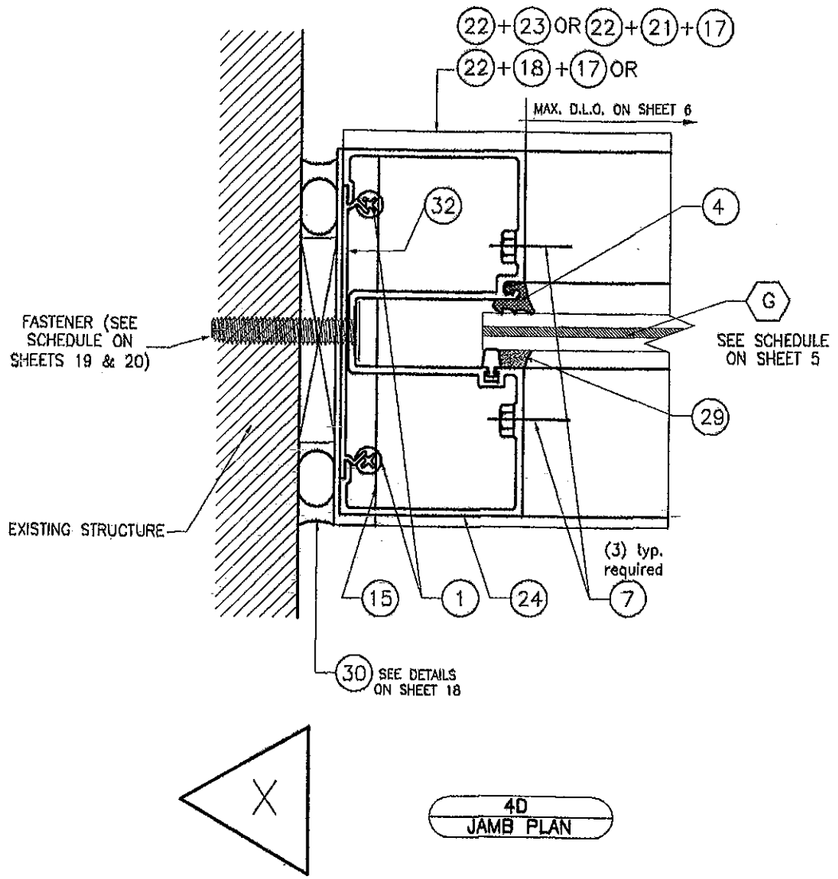

X

4D
JAMB PLAN

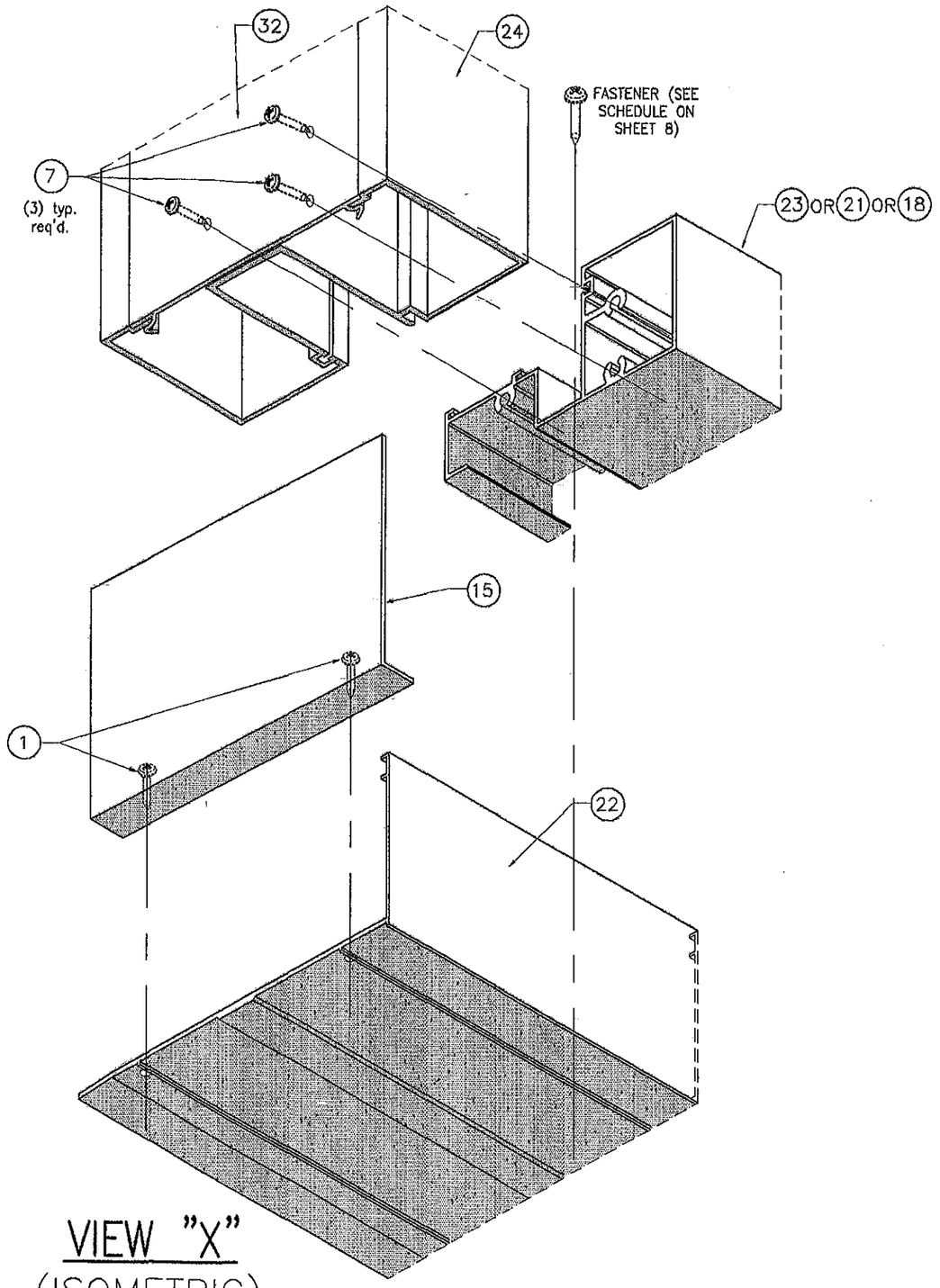

VIEW "X"
(ISOMETRIC)

FLORIDA BUILDING CODE (High Velocity Hurricane Zone)

SERIES FG-5000 FLUSH GLAZED ALUMINUM WINDOW WALL SYSTEM
LARGE & SMALL MISSILE IMPACT LAMINATED GLASS

Oldcastle BuildingEnvelope™
803 Airport Rd - Terrell, TX 75160
www.OldcastleBE.com - Phone 800-869-4567

DESC. No.	DESCRIPTION	DATE	REV. No.	DESCRIPTION	DATE
1	OLD 110-0375	12/01/11	3		
2			4		

DRAWN BY: L.G./M.C.V./A.G.
12/01/11 DATE
11-196 DRAWING No
SHEET 21 OF 22

©2011 TILLECO, INC

TILLECO INC.
TESTING & ENGINEERING COMPANY
TILLIT TESTING & ENGINEERING COMPANY
8333 N.W. 30th St., Suite 305, Miami, FL 33166
Phone: (305)871-1530 Fax: (305)871-1531
e-mail: tilleco@aol.com
EB-0006719
WALTER A. TILLIT JR. P.E.
FLORIDA Lic. # 44167

WALTER A. TILLIT JR. LICENSE No. 44167 STATE OF FLORIDA PROFESSIONAL ENGINEER
P.E. SEAL AND SIGNATURE / DATE

PRODUCT REVISED
as complying with the Florida Building Code
Acceptance No 12-0109.06
Expiration Date Nov. 18, 2014
By Miami Dade Product Control

MIAMI-DADE COUNTY

DOOR JAMB MULLION INSTALLATION ADJACENT TO WINDOW WALL

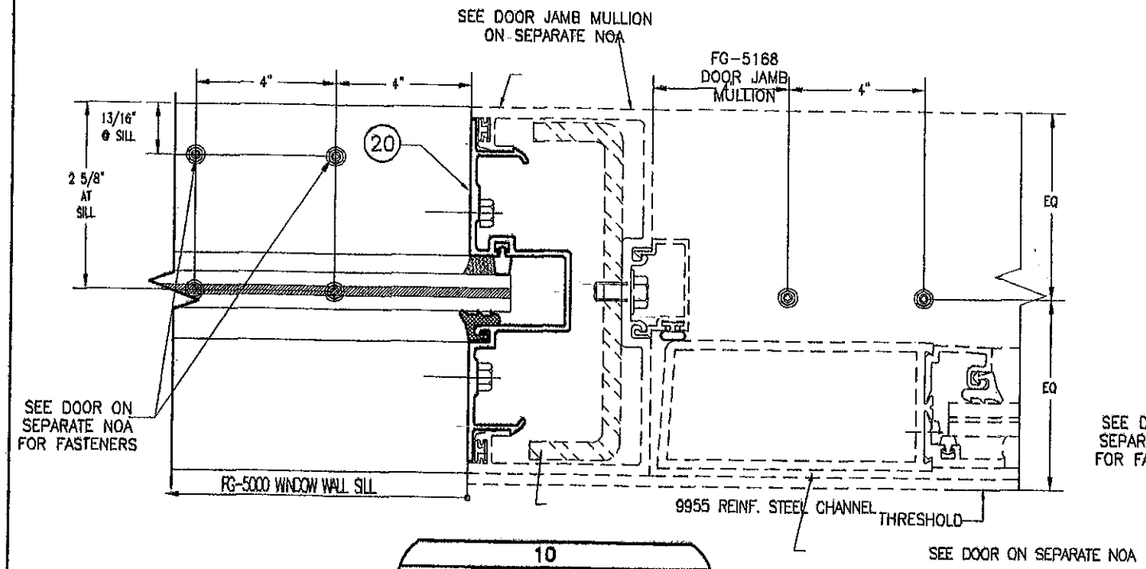

10
DOOR JAMB MULLION/WINDOW WALL AT CONCRETE/STEEL SILL

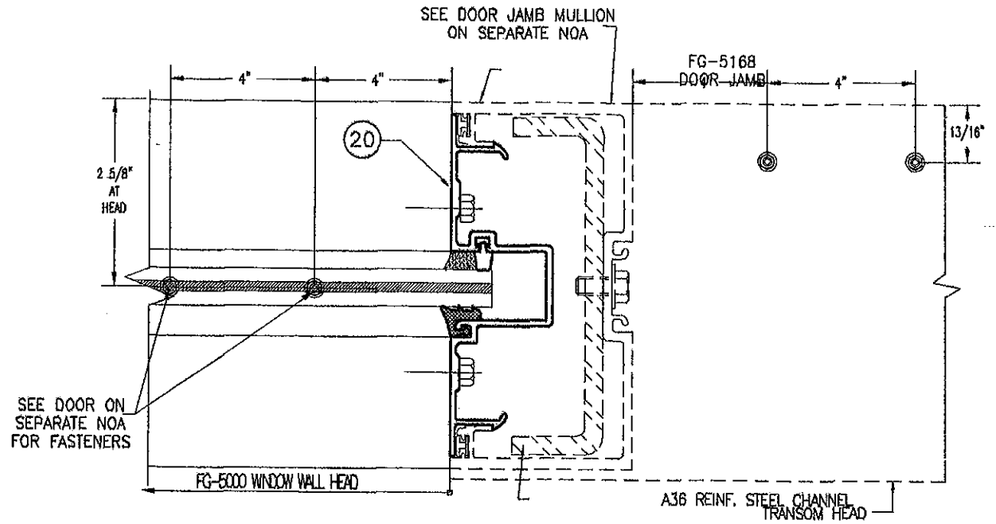

10A
DOOR JAMB MULLION/WINDOW WALL AT CONCRETE/STEEL HEAD

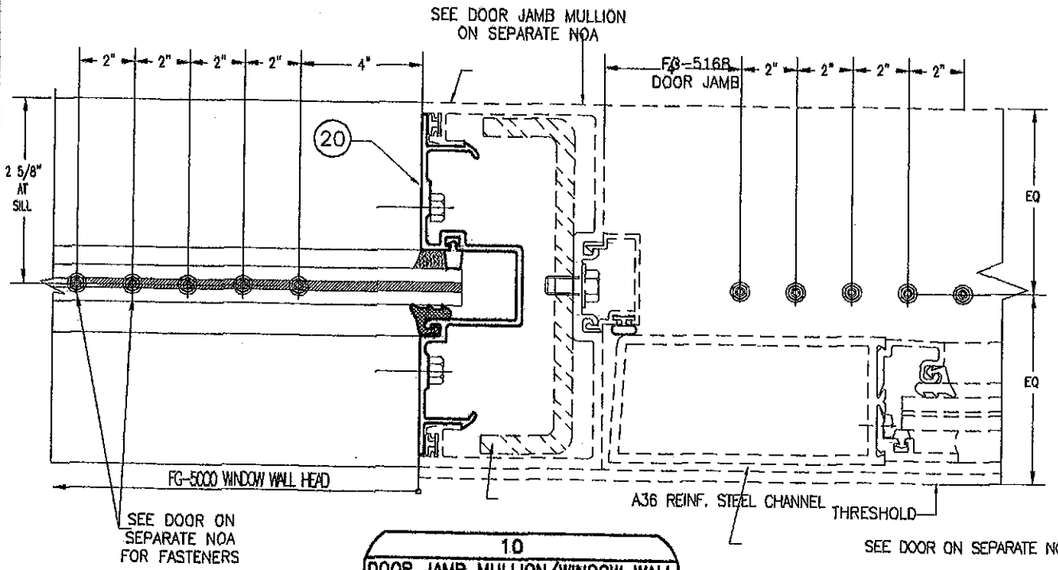

10
DOOR JAMB MULLION/WINDOW WALL AT WOOD SILL

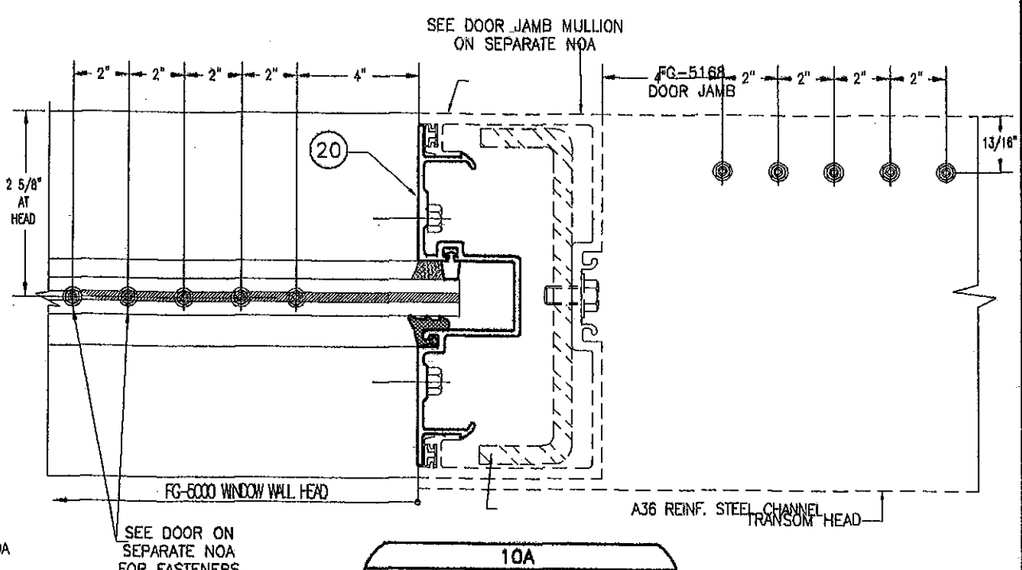

10A
DOOR JAMB MULLION/WINDOW WALL AT WOOD HEAD

FLORIDA BUILDING CODE (High Velocity Hurricane Zone)

SERIES FG-5000 FLUSH GLAZED ALUMINUM WINDOW WALL SYSTEM
LARGE & SMALL MISSILE IMPACT LAMINATED GLASS

Oldcastle BuildingEnvelope™
803 Airport Rd - Terrell, TX 75160
www.OldcastleBE.com - Phone 800-869-4567

REV. No	DESCRIPTION	DATE	REV. No	DESCRIPTION	DATE
1	OLD 10-076	12/01/11	3		
2			4		

DRAWN BY: L.G./M.C.V./A.G.
12/01/11 DATE
11-196 DRAWING No
SHEET 22 OF 22

©2011 TILTECO, INC

TILTECO INC.
TILLIT TESTING & ENGINEERING COMPANY
6355 N.W. 36th. St., Ste. 305, VIRGINIA GARDENS, Fl. 33166
Phone : (305)871-1530 . Fax : (305)871-1531
e-mail: tilteco@aol.com
EB-0006719
WALTER A. TILLIT Jr. P.E.
FLORIDA Lic. # 44167

WALTER A. TILLIT JR. LICENSE No. 44167 STATE OF FLORIDA PROFESSIONAL ENGINEER

P.E. SEAL/SIGNATURE/DATE

PRODUCT REVISED as complying with the Florida Building Code
Acceptance No 12-0109.06
Expiration Date Nov. 18, 2014
By Manuel Perez
Miami Dade Product Control

MIAMI-DADE COUNTY