MIAMI-DADE COUNTY
DEPARTMENT OF PERMITTING, ENVIRONMENT, AND REGULATORY AFFAIRS (PERA)
BOARD AND CODE ADMINISTRATION DIVISION

MIAMI-DADE COUNTY
PRODUCT CONTROL SECTION
11805 SW 26 Street, Room 208
Miami, Florida 33175-2474
T (786) 315-2590 F (786) 315-2599
www.miamidade.gov/pera/

NOTICE OF ACCEPTANCE (NOA)

Trulite Window & Door Solutions, LLC
8130 NW 74th Avenue
Medley, FL 33166

SCOPE:

This NOA is being issued under the applicable rules and regulations governing the use of construction materials. The documentation submitted has been reviewed and accepted by Miami-Dade County PERA - Product Control Section to be used in Miami Dade County and other areas where allowed by the Authority Having Jurisdiction (AHJ).

This NOA shall not be valid after the expiration date stated below. The Miami-Dade County Product Control Section (In Miami Dade County) and/or the AHJ (in areas other than Miami Dade County) reserve the right to have this product or material tested for quality assurance purposes. If this product or material fails to perform in the accepted manner, the manufacturer will incur the expense of such testing and the AHJ may immediately revoke, modify, or suspend the use of such product or material within their jurisdiction. PERA reserves the right to revoke this acceptance, if it is determined by Miami-Dade County Product Control Section that this product or material fails to meet the requirements of the applicable building code.

This product is approved as described herein, and has been designed to comply with the Florida Building Code, including the High Velocity Hurricane Zone.

DESCRIPTION: Series "10100" White PVC Horizontal Sliding Window – N.I.

APPROVAL DOCUMENT: Drawing No. **W09-49**, titled "Series 10100 PVC Horiz. Sliding Wdw. (N.I.)" Sheets 1 through 8 of 8, dated 09/17/09 with revision B dated 12/23/11, prepared by Al-Farooq Corporation, signed and sealed by Javad Ahmad, P.E., bearing the Miami-Dade County Product Control Revision stamp with the Notice of Acceptance number and expiration date by the Miami-Dade County Product Control Division.

MISSILE IMPACT RATING: None.

LABELING: Each unit shall bear a permanent label with the manufacturer's name or logo, city, state, model/series, and following statement: "Miami-Dade County Product Control Approved", unless otherwise noted herein.

RENEWAL of this NOA shall be considered after a renewal application has been filed and there has been no change in the applicable building code negatively affecting the performance of this product.

TERMINATION of this NOA will occur after the expiration date or if there has been a revision or change in the materials, use, and/or manufacture of the product or process. Misuse of this NOA as an endorsement of any product, for sales, advertising or any other purposes shall automatically terminate this NOA. Failure to comply with any section of this NOA shall be cause for termination and removal of NOA.

ADVERTISEMENT: The NOA number preceded by the words Miami-Dade County, Florida, and followed by the expiration date may be displayed in advertising literature. If any portion of the NOA is displayed, then it shall be done in its entirety.

INSPECTION: A copy of this entire NOA shall be provided to the user by the manufacturer or its distributors and shall be available for inspection at the job site at the request of the Building Official.

This NOA **revises NOA # 10-0518.13** and consists of this page 1 and evidence pages E-1 and E-2, as well as approval document mentioned above.

The submitted documentation was reviewed by **Manuel Perez, P.E.**

MIAMI-DADE COUNTY APPROVED

Trulite Window & Door Solutions, LLC

NOTICE OF ACCEPTANCE: EVIDENCE SUBMITTED

A. DRAWINGS

1. Manufacturer's die drawings and sections.
2. Drawing No. **W09-49**, titled "Series 10100 PVC Horiz. Sliding Wdw. (N.I.)" Sheets 1 through 8 of 8, dated 09/17/09 with revision B dated 12/23/11, prepared by Al-Farooq Corporation, signed and sealed by Javad Ahmad, P.E.

B. TESTS

1. Test reports on: 1) Air Infiltration Test, per FBC, TAS 202-94
   2) Uniform Static Air Pressure Test, Loading per FBC TAS 202-94
   3) Water Resistance Test, per FBC, TAS 202-94
   4) Large Missile Impact Test, per FBC, TAS 201-94
   5) Cyclic Wind Pressure Loading per FBC, TAS 203-94
   6) Forced Entry Test, per FBC 2411.3.2.1 (b) and TAS 202-94

   along with marked-up drawings and installation diagram of PVC horizontal sliding window, prepared by Fenestration Testing Laboratory, Test Report No. **FTL-5931** dated 05/28/09, signed and sealed by Julio E. Gonzalez, P.E.
   (Submitted under previous NOA#09-1006.10)

C. CALCULATIONS

1. Anchor verification calculations and structural analysis, complying with FBC-2007 and FBC-2010, dated 09/28/09 and updated on 01/04/12, prepared, signed and sealed by Arshad Viqar, P.E.
2. Glazing complies with ASTM E1300-04

D. QUALITY ASSURANCE

1. Miami-Dade Department of Permitting, Environment, and Regulatory Affairs (PERA).

E. MATERIAL CERTIFICATIONS

1. None.

Manuel Perez, P.E.
Product Control Examiner
NOA No. 12-0118.24
Expiration Date: January 06, 2015
Approval Date: March 15, 2012

NOTICE OF ACCEPTANCE: EVIDENCE SUBMITTED

F. STATEMENTS

1. Statement letter of conformance, complying with the FBC-2010, and of no financial interest, dated January 4, 2012, signed and sealed by Javad Ahmad, P.E.
2. Florida Dept of State, listing of Trulite Window & Door Solutions, LLC (Foreign Limited Liability Co.), managed by Arch Intermediate Holding, LLC, Tamarac, Fl., dated 02/03/10.
3. Certificate of registration of name change from "Trulite Residential Windows, LLC" to "Trulite Window & Door Solutions, LLC" issued by State of Delaware on 10/28/11, signed by J.W. Bullock.
4. Certificate of registration of name change from "Arch Windows, LLC" to Trulite Residential Windows, LLC" issued by State of Delaware on 07/27/11, signed by J.W. Bullock.
5. Florida Department of State, listing of Arch Window, LLC (Foreign Limited Liability Co.), managed by Arch Intermediate Holding, LLC, Tamarac, Florida, dated 01/22/10.
6. Certificate of registration of Arch Windows, LLC (Delaware) in State of Florida dated 02/04/10, managed by Arch Intermediate Holding, LLC.

G. OTHER

1. Notice of Acceptance No. **10-0518.13**, issued to Arch Windows, LLC dba AWP, for their Series "10100" White PVC Horizontal Sliding Window – N.I.", approved on 08/25/10 and expiring on 01/06/15.

Manuel Perez, P.E.
Product Control Examiner
NOA No. 12-0118.24
Expiration Date: January 06, 2015
Approval Date: March 15, 2012

INSTALLATION OF THIS PRODUCT IN THE HVHZ AREA REQUIRES THE USE OF APPROVED SHUTTERS OR EXTERNAL PROTECTION DEVICES COMPLYING WITH HVHZ REQUIREMENTS.

INSTALLATION OF THIS SYSTEM OUTSIDE THE HVHZ AREA SHALL MEET THE APPLICABLE REQUIREMENTS FOR WIND BORNE DEBRIS PROTECTION.

SERIES 10100 PVC HORIZONTAL SLIDING WINDOW

DESIGN LOAD RATINGS FOR THESE WINDOWS TO BE AS PER CHARTS SHOWN ON SHEET 3.

APPROVAL APPLIES TO SINGLE UNITS OR SIDE BY SIDE COMBINATIONS OF H.R./H.R. OR HORIZONTAL ROLLING WITH OTHER WINDOW TYPES IN MODULES OF TWO OR MORE WINDOWS USING MIAMI–DADE COUNTY APPROVED MULLIONS IN BETWEEN. LOWER DESIGN PRESSURE FROM WINDOWS OR MULLION APPROVAL WILL APPLY TO ENTIRE SYSTEM.

THIS PRODUCT HAS BEEN DESIGNED AND TESTED TO COMPLY WITH THE REQUIREMENTS OF THE FLORIDA BUILDING CODE INCLUDING HIGH VELOCITY HURRICANE ZONE (HVHZ).

WOOD BUCKS BY OTHERS, MUST BE ANCHORED PROPERLY TO TRANSFER LOADS TO THE STRUCTURE.

ANCHORS SHALL BE AS LISTED, SPACED AS SHOWN ON DETAILS, ANCHORS EMBEDMENT TO BASE MATERIAL SHALL BE BEYOND WALL DRESSING OR STUCCO.

ANCHORING OR LOADING CONDITIONS NOT SHOWN IN THESE DETAILS ARE NOT PART OF THIS APPROVAL.

A LOAD DURATION INCREASE IS USED IN DESIGN OF ANCHORS INTO WOOD ONLY.

MATERIALS INCLUDING BUT NOT LIMITED TO STEEL/METAL SCREWS, THAT COME INTO CONTACT WITH OTHER DISSIMILAR MATERIALS SHALL MEET THE REQUIREMENTS OF THE FLORIDA BLDG. CODE SECTION 2003.8.4.

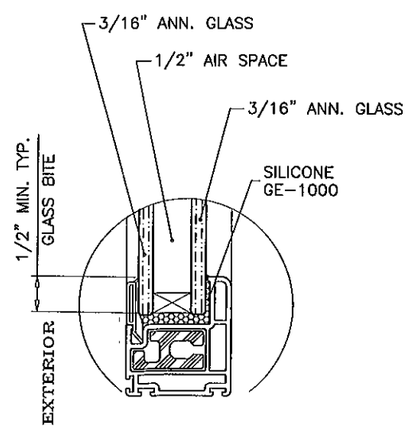

GLAZING DETAIL

7/8" OVERALL INSULATING GLASS

INSULATING GLASS
NON IMPACT

Engr: JAVAD AHMAD
CIVIL
FLA. PE # 70592
C.A.N. 3538

JAN 11 2012

PRODUCT REVISED
as complying with the Florida
Building Code
Acceptance No 12-0118.24
Expiration Date JAN. 6, 2015
By Manuel Perez
Miami-Dade Product Control

SERIES 10100 PVC HORIZ. SLIDING WDW. (N.I.)

TRULITE WINDOW & DOOR SOLUTIONS, LLC
8130 N.W. 74TH AVE.
MEDLEY, FL. 33166
TEL. (305) 887–2646 FAX (305) 883–1309

AL-FAROOQ CORPORATION
ENGINEERS & PRODUCT DEVELOPMENT
1235 S.W. 87 AVE
MIAMI, FLORIDA 33174
TEL. (305) 264-8100 FAX. (305) 262-6978

COMP–ANL\W09–49AWP

revisions:

no	date	by	description
A	05.06.10		MANUF. NAME REVISED
B	12.23.11		UPDATED TO 2010 FBC, NAME REV

date: 09–17–09
scale: 1/2"=1'–0"
dr. by: HAMID
chk. by:

drawing no.
W09–49

sheet 1 of 8

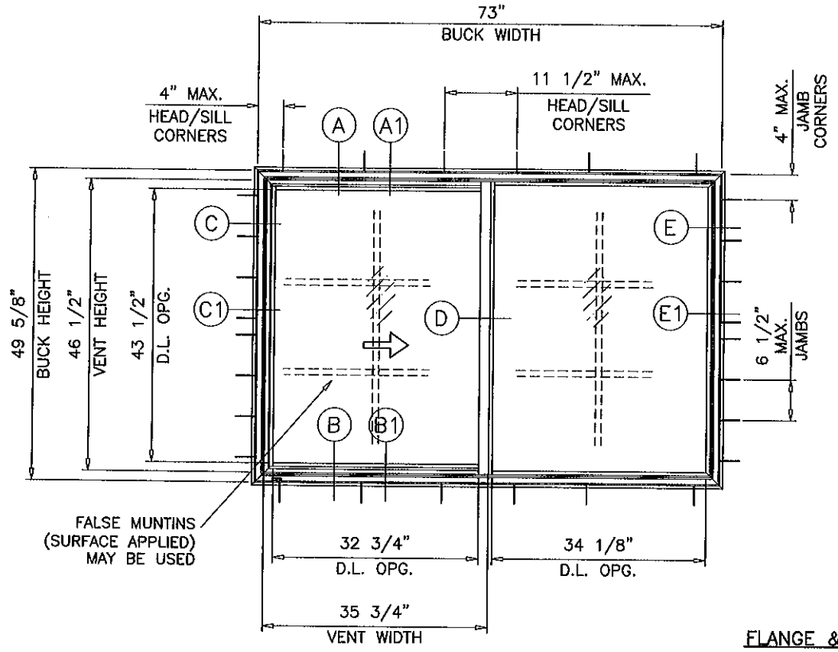

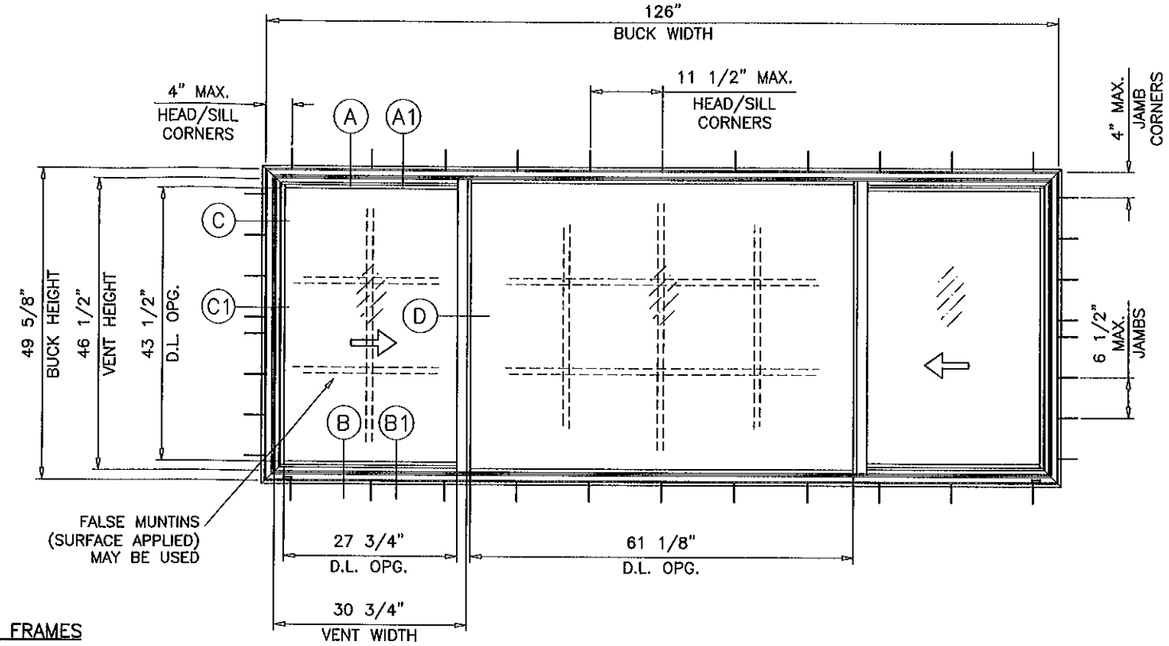

FLANGE & FLUSH FRAMES

TYPICAL ELEVATIONS

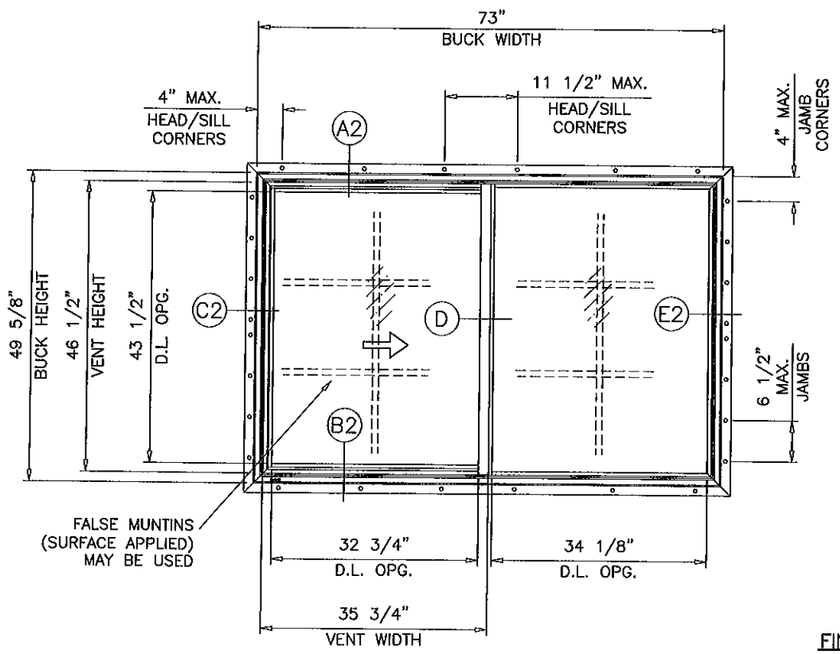

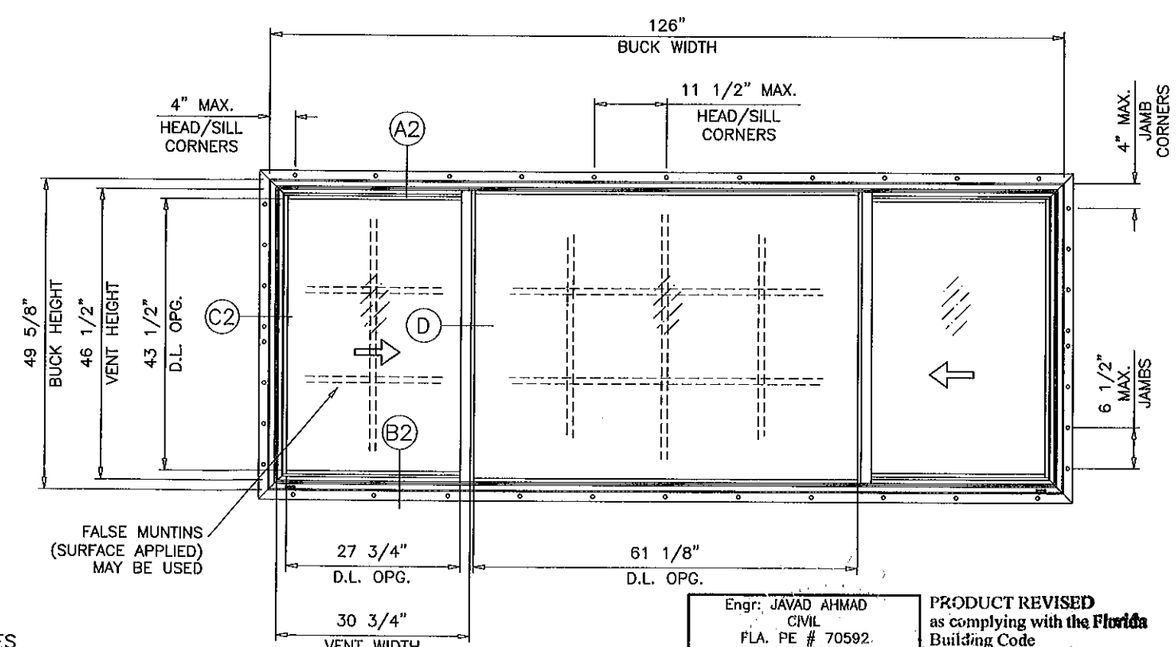

FIN FRAMES

TYPICAL ELEVATIONS

Engr: JAVAD AHMAD
CIVIL
FLA. PE # 70592
C.A.N. 3538

JAN 11 2012

PRODUCT REVISED
as complying with the Florida
Building Code
Acceptance No 12-0118.24
Expiration Date JAN. 6, 2015
By Manuel Lara
Miami Dade Product Control

AL-FAROOQ CORPORATION
ENGINEERS & PRODUCT DEVELOPMENT
1235 S.W. 87 AVE
MIAMI, FLORIDA 33174
TEL. (305) 264-8100 FAX. (305) 262-6978

COMP-ANL\W09-49AWP

SERIES 10100 PVC HORIZ. SLIDING WDW. (N.I.)

TRULITE WINDOW & DOOR SOLUTIONS, LLC
8130 N.W. 74TH AVE.
MEDLEY, FL. 33166
TEL. (305) 887-2846 FAX (305) 883-1309

revisions:

no	date	by	description
A	05.06.10		MANUF. NAME REVISED
B	12.23.11		MANUF. NAME REVISED

date: 09-17-09
scale: 1/2"=1'-0"
dr. by: HAMID
chk. by:

drawing no.
W09-49

sheet 2 of 8

DESIGN LOAD CAPACITY – PSF (XO OR OX SIZES)

BUCK DIMS. WIDTH	BUCK DIMS. HEIGHT	A	INSUL. GLASS EXT.(+)	INSUL. GLASS INT.(–)
25–1/2"	25" (4)	4	65.0	125.0
36"		4	65.0	125.0
52–1/8"		5	65.0	125.0
73"		7	65.0	125.0
25–1/2"	37–3/8" (6)	4	65.0	125.0
36"		4	65.0	125.0
52–1/8"		5	65.0	121.0
73"		7	65.0	110.0
25–1/2"	49–5/8" (8)	4	65.0	125.0
36"		4	65.0	105.0
52–1/8"		5	65.0	80.5
23"	23" (4)	4	65.0	125.0
35"		4	65.0	125.0
47"		5	65.0	125.0
59"		6	65.0	125.0
71"		7	65.0	125.0
83"		8	65.0	125.0
23"	35" (6)	4	65.0	125.0
35"		4	65.0	125.0
47"		5	65.0	125.0
59"		6	65.0	125.0
71"		7	65.0	125.0
83"		8	65.0	125.0
23"	47" (7)	4	65.0	125.0
35"		4	65.0	114.7
47"		5	65.0	92.7
59"		6	65.0	80.7
71"		7	65.0	74.0
23"	49–5/8" (8)	4	65.0	125.0
35"		4	65.0	107.4
47"		5	65.0	86.3
59"		6	65.0	74.6
71"		7	65.0	67.9

A = NO. OF ANCHORS PER HEAD & SILL
( ) = NO. OF ANCHORS PER JAMB

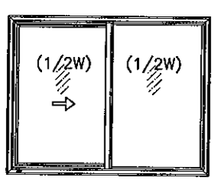

OPERATING VENTS TO BE 1/2 OF THE WINDOW WIDTH

'XO OR OX'

DESIGN LOAD CAPACITY – PSF (XO OR OX SIZES)

BUCK DIMS. WIDTH	BUCK DIMS. HEIGHT	A	INSUL. GLASS EXT.(+)	INSUL. GLASS INT.(–)
54–5/8"	25" (4)	5	65.0	125.0
78–3/4"		8	65.0	125.0
82–3/8"		8	65.0	125.0
54–5/8"	37–3/8" (6)	5	65.0	116.6
78–3/4"		8	65.0	111.1
82–3/8"		8	65.0	105.1
54–5/8"	49–5/8" (8)	5	65.0	81.5
78–3/4"		8	65.0	70.1
82–3/8"		8	65.0	69.2
53–1/8"	23" (4)	5	65.0	125.0
62–1/8"		6	65.0	125.0
71–1/2"		7	65.0	125.0
80–1/8"		8	65.0	125.0
89–1/8"		8	65.0	125.0
53–1/8"	35" (6)	5	65.0	125.0
62–1/8"		6	65.0	123.2
71–1/2"		7	65.0	119.5
80–1/8"		8	65.0	112.2
89–1/8"		8	65.0	96.5
53–1/8"	47" (7)	5	65.0	89.6
62–1/8"		6	65.0	83.0
71–1/2"		7	65.0	79.2
80–1/8"		8	65.0	76.6
53–1/8"	49–5/8" (8)	5	65.0	82.8
62–1/8"		6	65.0	76.3
71–1/2"		7	65.0	72.3
80–1/8"		8	65.0	69.8

A = NO. OF ANCHORS PER HEAD & SILL
( ) = NO. OF ANCHORS PER JAMB

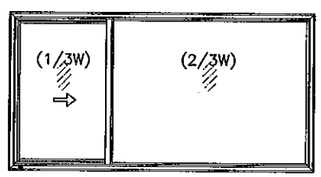

OPERATING VENTS TO BE 1/3 OF THE WINDOW WIDTH

'XO OR OX'

DESIGN LOAD CAPACITY – PSF (XOX SIZES)

BUCK DIMS. WIDTH	BUCK DIMS. HEIGHT	A	INSUL. GLASS EXT.(+)	INSUL. GLASS INT.(–)
73"	25" (4)	7	65.0	125.0
105–1/4"		10	65.0	125.0
110"		10	65.0	125.0
73"	37–3/8" (6)	9	65.0	116.6
105–1/4"		12	65.0	111.1
110"		12	65.0	105.1
73"	49–5/8" (8)	9	65.0	81.5
105–1/4"		12	65.0	70.1
110"		12	65.0	69.2
71"	23" (4)	7	65.0	125.0
83"		8	65.0	125.0
95"		9	65.0	125.0
107"		10	65.0	125.0
119"		11	65.0	125.0
125"		11	65.0	125.0
71"	35" (6)	7	65.0	125.0
83"		8	65.0	123.2
95"		9	65.0	119.5
107"		10	65.0	112.2
119"		11	65.0	96.5
125"		11	65.0	88.9
71"	47" (7)	7	65.0	89.6
83"		8	65.0	83.0
95"		9	65.0	79.2
107"		10	65.0	76.6
71"	49–5/8" (8)	7	65.0	82.8
83"		8	65.0	76.3
95"		9	65.0	72.3
107"		10	65.0	69.8

A = NO. OF ANCHORS PER HEAD & SILL
( ) = NO. OF ANCHORS PER JAMB

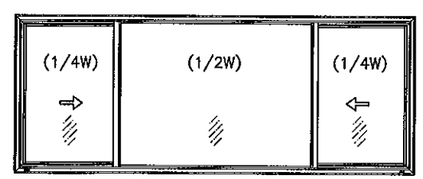

OPERATING VENTS TO BE 1/4 OF THE WINDOW WIDTH

'XOX'

DESIGN LOAD CAPACITY – PSF (XOX SIZES)

BUCK DIMS. WIDTH	BUCK DIMS. HEIGHT	A	INSUL. GLASS EXT.(+)	INSUL. GLASS INT.(–)
73"	25" (4)	7	65.0	125.0
105–1/4"		10	65.0	125.0
110"		10	65.0	125.0
73"	37–3/8" (6)	9	65.0	122.0
105–1/4"		12	65.0	110.4
110"		12	65.0	108.0
73"	49–5/8" (8)	9	65.0	84.3
105–1/4"		12	65.0	68.2
71"	23" (4)	7	65.0	125.0
83"		8	65.0	125.0
95"		9	65.0	125.0
107"		10	65.0	125.0
119"		11	65.0	125.0
125"		11	65.0	125.0
71"	35" (6)	7	65.0	125.0
83"		8	65.0	125.0
95"		9	65.0	122.1
107"		10	65.0	117.7
119"		11	65.0	114.1
125"		11	65.0	107.8
71"	47" (7)	7	65.0	92.3
83"		8	65.0	83.7
95"		9	65.0	77.8
107"		10	65.0	73.8
71"	49–5/8" (8)	7	65.0	85.9
83"		8	65.0	77.6
95"		9	65.0	71.8

A = NO. OF ANCHORS PER HEAD & SILL
( ) = NO. OF ANCHORS PER JAMB

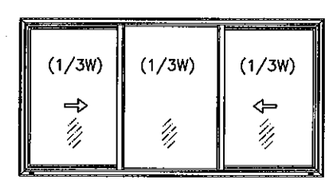

OPERATING VENTS TO BE 1/3 OF THE WINDOW WIDTH

'XOX'

NOTE:
GLASS CAPACITIES ON THIS SHEET ARE BASED ON ASTM E1300–04 (3 SEC. GUSTS) AND FLORIDA BUILDING COMMISSION DECLARATORY STATEMENT DCA05–DEC–219

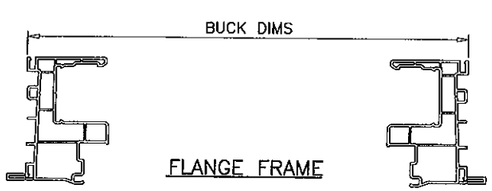

FLANGE FRAME

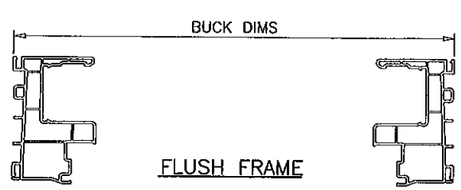

FLUSH FRAME

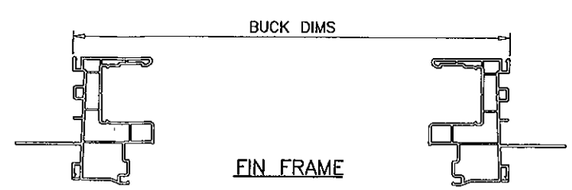

FIN FRAME

Engr: JAVAD AHMAD
CIVIL
FLA. PE # 70592
C.A.N. 3538

JAN 11 2012

PRODUCT REVISED
as complying with the Florida Building Code
Acceptance No 12-0118.24
Expiration Date JAN. 6, 2015
By Manuel Perez
Miami Dade Product Control

AL-FAROOQ CORPORATION
ENGINEERS & PRODUCT DEVELOPMENT
1235 S.W. 87 AVE
MIAMI, FLORIDA 33174
TEL. (305) 264-8100 FAX. (305) 262-6978

COMP–ANL\W09–49AWP

SERIES 10100 PVC HORIZ. SLIDING WDW. (N.I.)

TRULITE WINDOW & DOOR SOLUTIONS, LLC
8130 N.W. 74TH AVE.
MEDLEY, FL. 33166
TEL. (305) 887-2646 FAX (305) 883-1309

revisions:

no	date	by	description
A	05.06.10		MANUF. NAME REVISED
B	12.23.11		MANUF. NAME REVISED

date: 09–17–09
scale: –
dr. by: HAMID
chk. by:

drawing no. W09–49

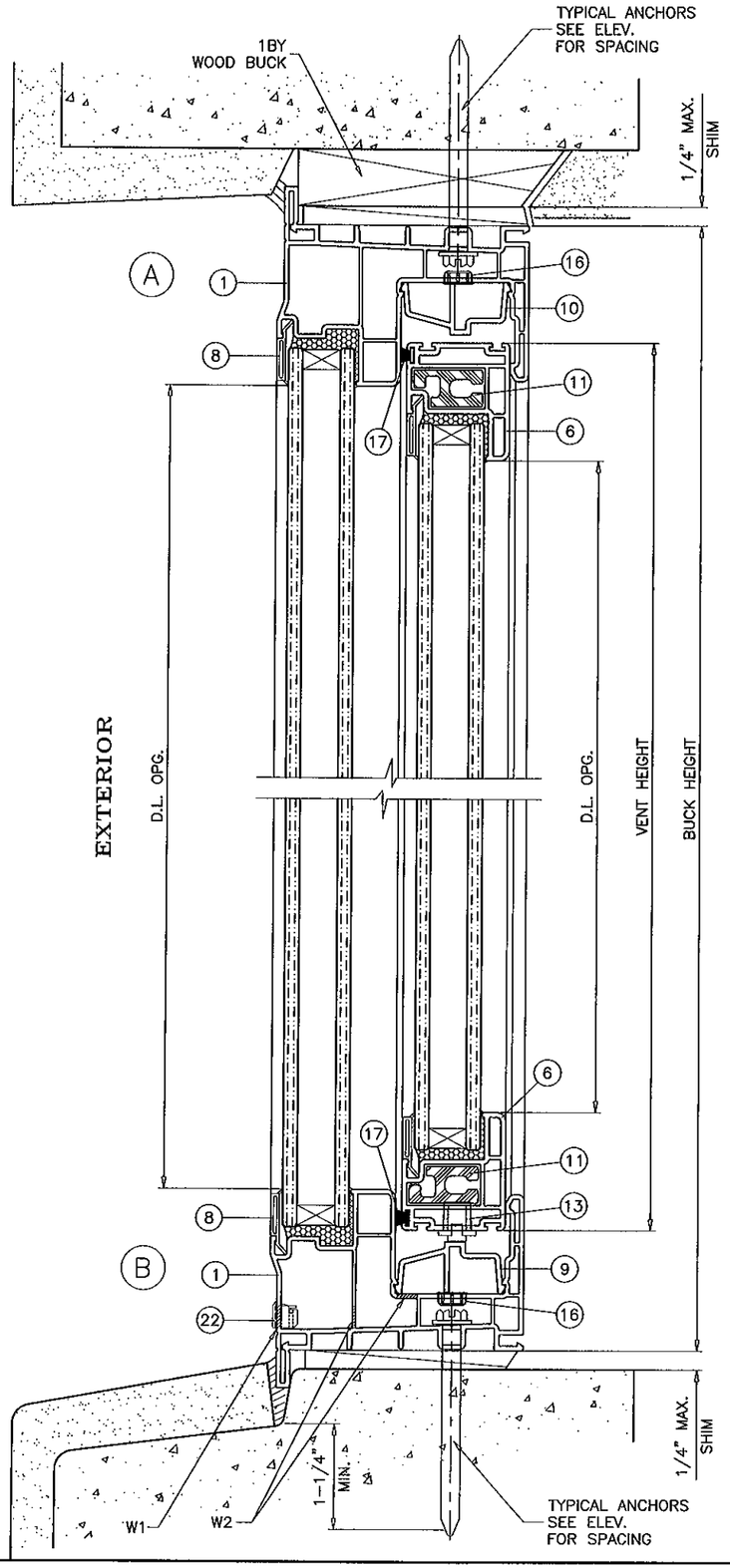

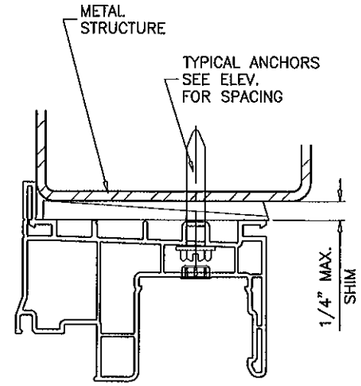

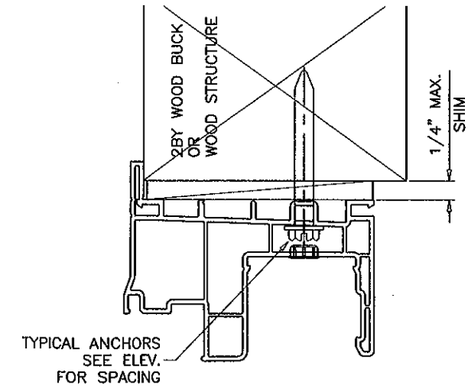

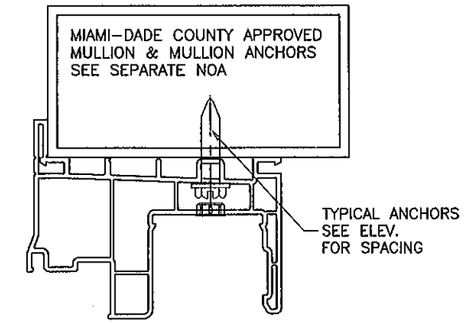

WOOD BUCKS AND METAL STRUCTURE NOT BY TRULITE MUST SUSTAIN LOADS IMPOSED BY GLAZING SYSTEM AND TRANSFER THEM TO THE BUILDING STRUCTURE.

WEEPHOLES:

W1 = 1/4" X 1" WEEP SLOT AT 4" FROM EACH END WITH PLASTIC BAFFLE.

W2 = 1/4" X 1" WEEP SLOT AT 4" FROM EACH END

SEALANT:

ALL JOINTS AND FRAME CONNECTIONS SEALED WITH JOINT SEALER.

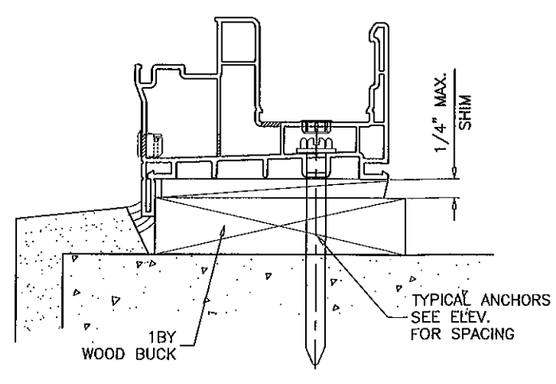

TYPICAL ANCHORS: SEE ELEV. FOR SPACING

1/4" DIA. TAPCON BY 'ITW' (Fu=120 KSI, Fy=92 KSI)
1/4" DIA. ULTRACON BY 'ELCO' (Fu=177 KSI, Fy=155 KSI)

INTO 2BY WOOD BUCKS OR WOOD STRUCTURES
1-3/8" MIN. PENETRATION INTO WOOD

THRU 1BY BUCKS INTO CONC. OR MASONRY
1-1/4" MIN. EMBED INTO CONC. OR MASONRY

DIRECTLY INTO CONC. OR MASONRY
1-1/4" MIN. EMBED INTO CONC. OR MASONRY

#12 SMS OR SELF DRILLING SCREWS (GRADE 2 CRS)
INTO METAL STRUCTURES

STEEL : 12 GA. MIN. (Fy = 36 KSI MIN.)
ALUMINUM : 1/8" THK. MIN. (6063-T5 MIN.)
(STEEL IN CONTACT WITH ALUMINUM TO BE PLATED OR PAINTED)

#12 SMS OR SELF DRILLING SCREWS (GRADE 2 CRS)

INTO MIAMI-DADE COUNTY APPROVED MULLIONS (MIN. THK. = .090")
(NO SHIM SPACE)

TYPICAL EDGE DISTANCE

INTO CONCRETE AND MASONRY = 1-1/2" MIN.
INTO WOOD STRUCTURE = 1" MIN.
INTO METAL STRUCTURE = 3/4" MIN.

CONCRETE AT HEAD, SILL OR JAMBS f'c = 3000 PSI MIN.
C-90 HOLLOW/FILLED BLOCK AT JAMBS f'm = 2000 PSI MIN.

Engr: JAVAD AHMAD
CIVIL
FLA. PE # 70592
C.A.N. 3538

JAN 11 2012

PRODUCT REVISED
as complying with the Florida
Building Code
Acceptance No 12-0118.24
Expiration Date JAN. 6, 2015
By Manuel Perez
Miami-Dade Product Control

AL-FAROOQ CORPORATION
ENGINEERS & PRODUCT DEVELOPMENT
1235 S.W. 87 AVE
MIAMI, FLORIDA 33174
TEL. (305) 264-8100 FAX. (305) 262-6978

COMP-ANL\W09-49AWP

SERIES 10100 PVC HORIZ. SLIDING WDW. (N.I.)

TRULITE WINDOW & DOOR SOLUTIONS, LLC
8130 N.W. 74TH AVE.
MEDLEY, FL. 33166
TEL (305) 887-2646 FAX (305) 883-1309

revisions:

no	date	by	description
A	05.06.10		MANUF. NAME REVISED
B	12.23.11		MANUF. NAME REVISED

date: 09-17-09
scale: 1/2" = 1"
dr. by: HAMID
chk. by:

drawing no.
W09-49

sheet 4 of 8

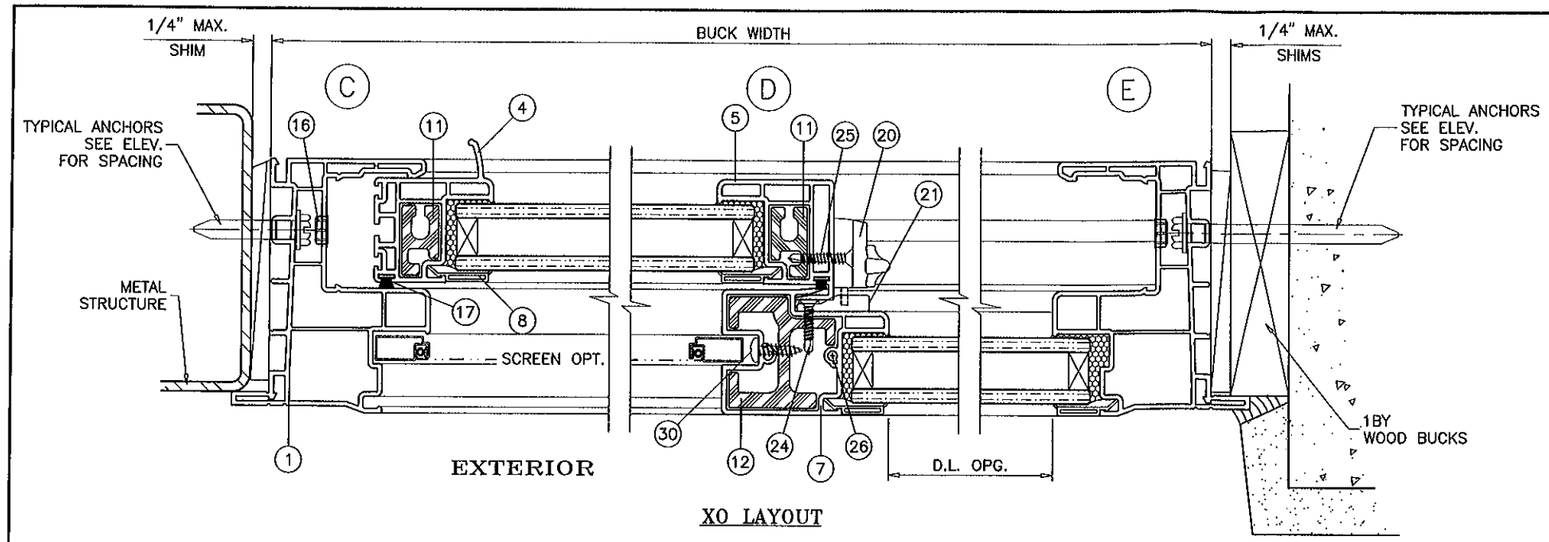

XO LAYOUT

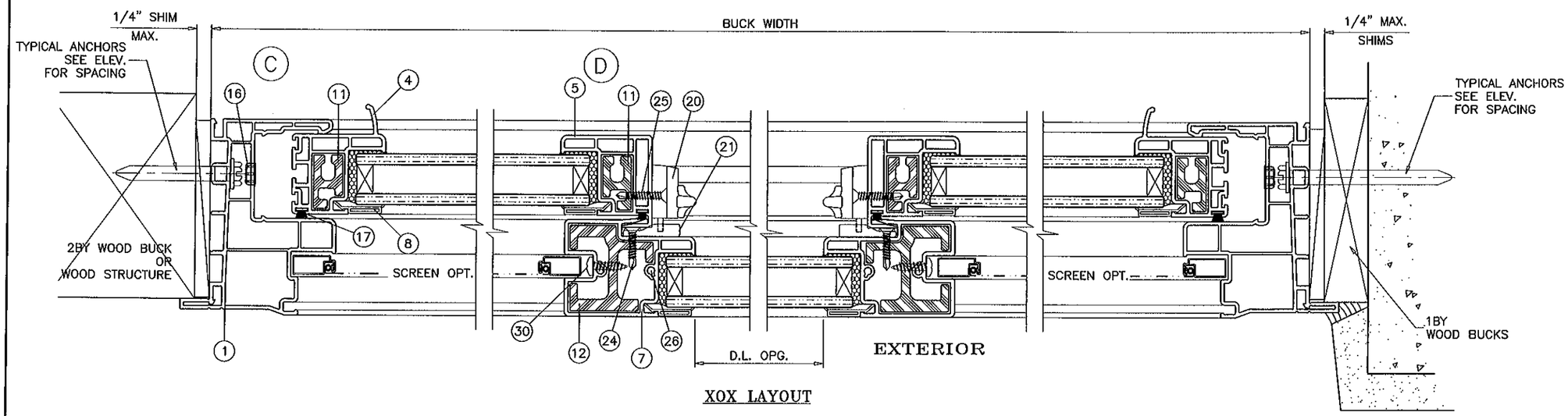

XOX LAYOUT

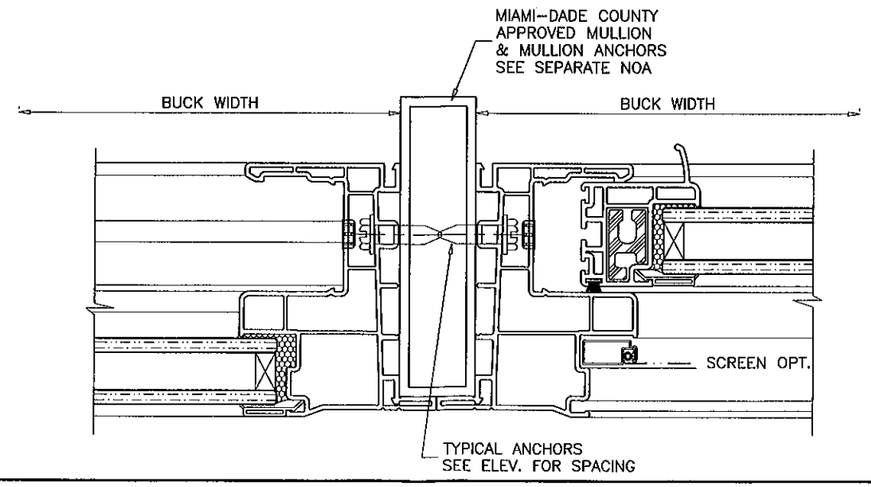

Engr: JAVAD AHMAD
CIVIL
FLA. PE # 70592
C.A.N. 3538

JAN 1 4 2012

PRODUCT REVISED
as complying with the Florida
Building Code
Acceptance No. 12-0112.24
Expiration Date JAN. 6, 2015
By Manuel Perez
Miami-Dade Product Control

AL-FAROOQ CORPORATION
ENGINEERS & PRODUCT DEVELOPMENT
1235 S.W. 87 AVE
MIAMI, FLORIDA 33174
TEL. (305) 264-8100 FAX. (305) 262-6978

COMP-ANL\W09-49AWP

SERIES 10100 PVC HORIZ. SLIDING WDW. (N.I.)

TRULITE WINDOW & DOOR SOLUTIONS, LLC
8130 N.W. 74TH AVE.
MEDLEY, FL. 33166
TEL. (305) 887-2646 FAX (305) 883-1309

revisions:

no	date	by	description
A	05.06.10		MANUF. NAME REVISED
B	12.23.11		MANUF. NAME REVISED

date: 09-17-09
scale: 1/2" = 1"
dr. by: HAMID
chk. by:

drawing no.
W09-49

sheet 5 of 8

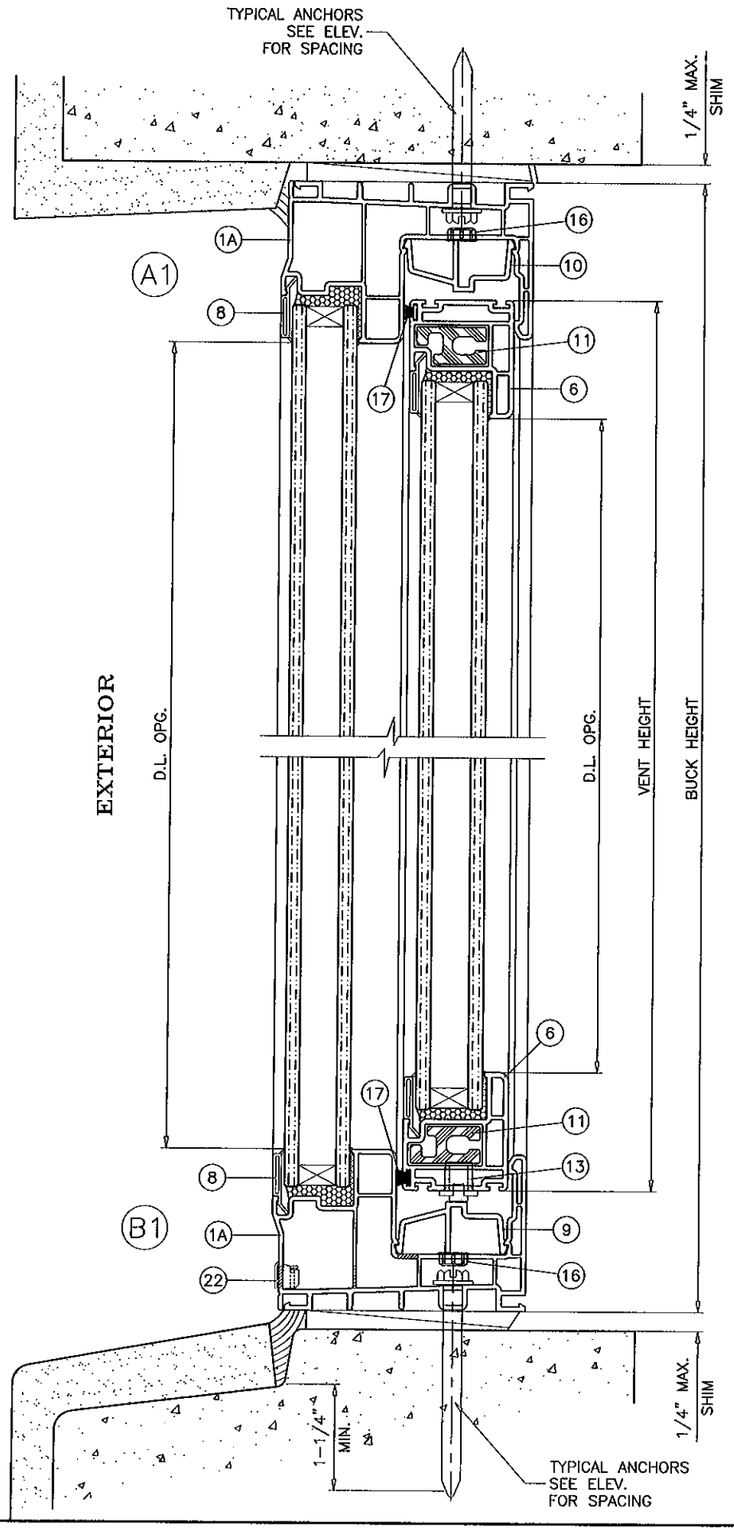

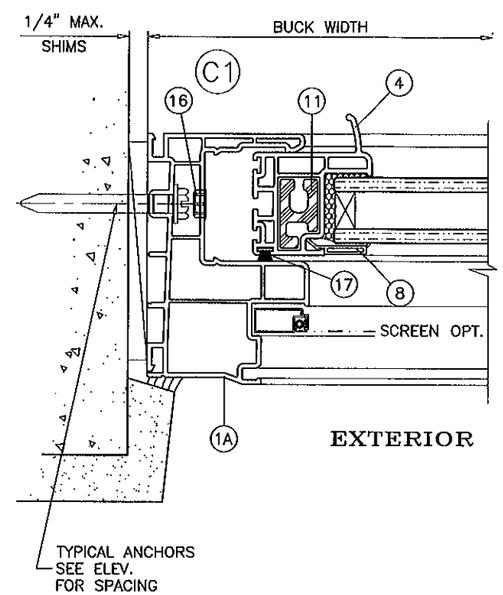

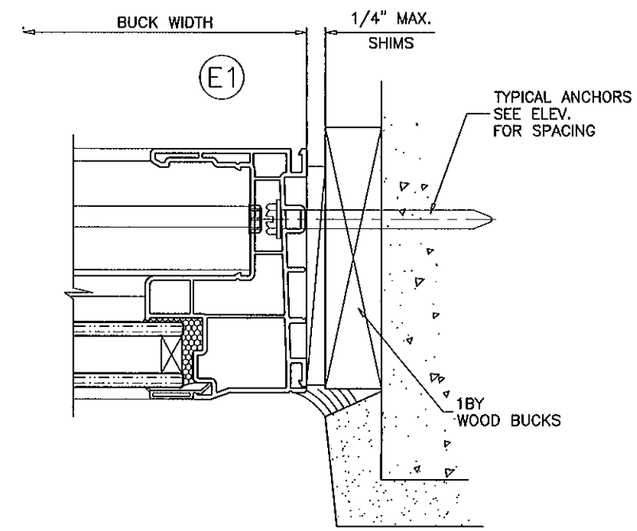

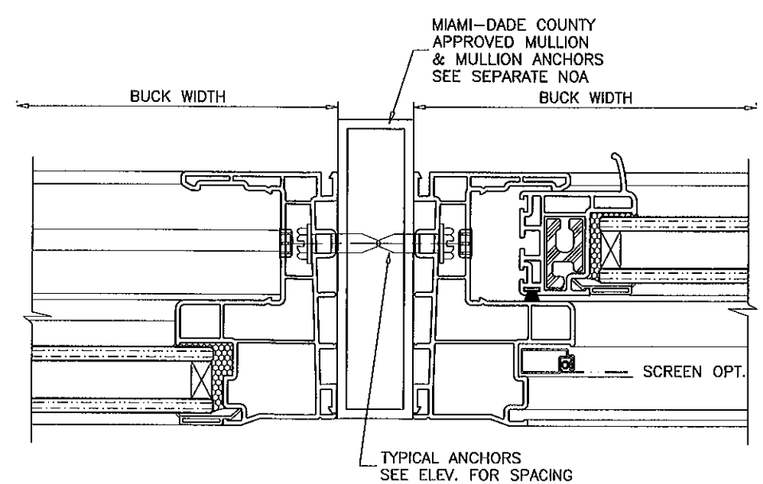

Engr: JAVAD AHMAD
CIVIL
FLA. PE # 70592
C.A.N. 3538
JAN 11 2012

PRODUCT REVISED
as complying with the Florida
Building Code
Acceptance No 12-0118.24
Expiration Date JAN. 6, 2015
By Manuel Perez
Miami Dade Product Control

AL-FAROOQ CORPORATION
ENGINEERS & PRODUCT DEVELOPMENT
1235 S.W. 87 AVE
MIAMI, FLORIDA 33174
TEL. (305) 264-8100 FAX. (305) 262-6978

COMP-ANL\W09-49AWP

SERIES 10100 PVC HORIZ. SLIDING WDW. (N.I.)

TRULITE WINDOW & DOOR SOLUTIONS, LLC
81.30 N.W. 74TH AVE.
MEDLEY, FL. 33166
TEL. (305) 887-2646 FAX (305) 883-1309

revisions:

no	date	by	description
A	05.06.10		MANUF. NAME REVISED
B	12.23.11		MANUF. NAME REVISED

date: 09-17-09
scale: 1/2" = 1"
dr. by: HAMID
chk. by:

drawing no.
W09-49

sheet 6 of 8

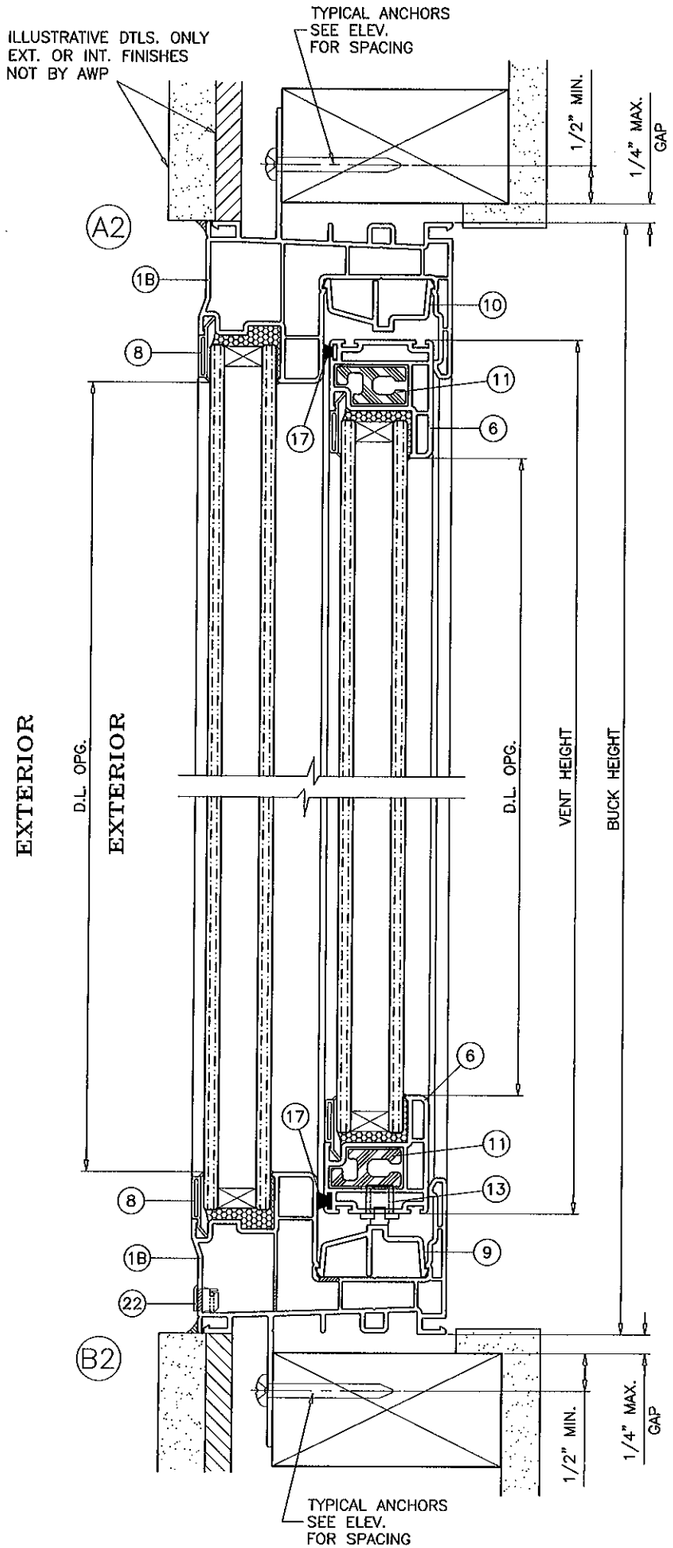

TYPICAL ANCHORS: SEE ELEV. FOR SPACING

#12 SMS (GRADE 2 CRS)

INTO 2BY WOOD BUCKS OR WOOD STRUCTURES
1-3/8" MIN. PENETRATION INTO WOOD

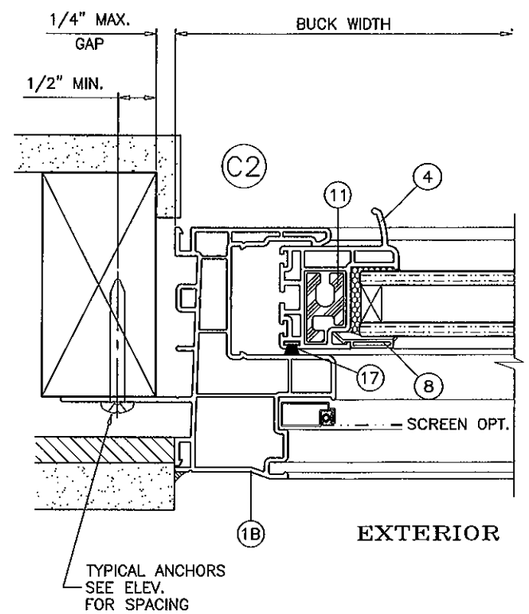

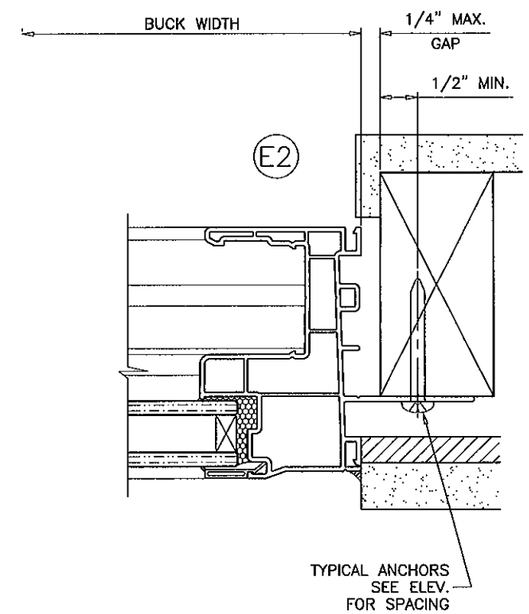

Engr: JAVAD AHMAD
CIVIL
FLA. PE # 70592
C.A.N. 3538

JAN 11 2012

PRODUCT REVISED
as complying with the Florida
Building Code
Acceptance No 12-0118.24
Expiration Date JAN. 6, 2015
By Marcelo Perez
Miami Dade Product Control

AL-FAROOQ CORPORATION
ENGINEERS & PRODUCT DEVELOPMENT
1235 S.W. 87 AVE
MIAMI, FLORIDA 33174
TEL. (305) 264-8100 FAX. (305) 262-6978

COMP-ANL\W09-49AWP

SERIES 10100 PVC HORIZ. SLIDING WDW. (N.I.)

TRULITE WINDOW & DOOR SOLUTIONS, LLC
8130 N.W. 74TH AVE.
MEDLEY, FL. 33166
TEL. (305) 887-2646 FAX (305) 883-1309

revisions:

no	date	by	description
A	05.06.10		MANUF. NAME REVISED
B	12.23.11		MANUF. NAME REVISED

date: 09-17-09
scale: 1/2" = 1"
dr. by: HAMID
chk. by:

drawing no.
W09-49

sheet 7 of 8

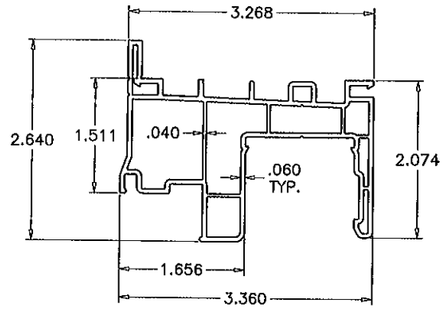

1 FLANGE FRAME

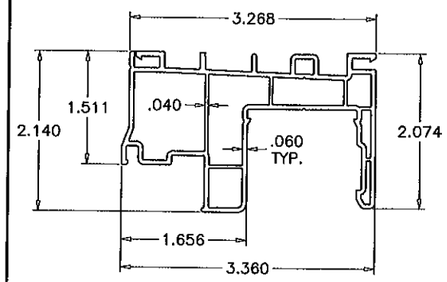

1A FLUSH FRAME

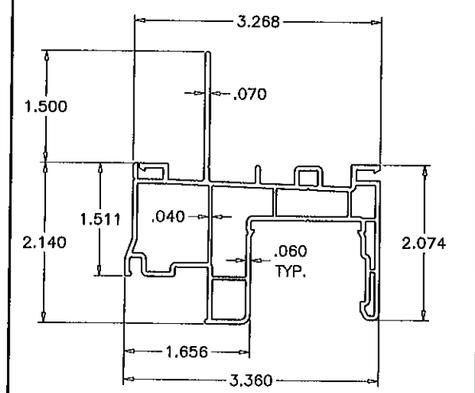

1B FIN FRAME

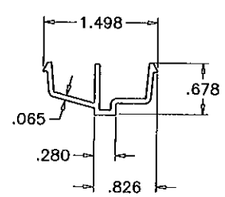

9 ROLLER TRACK

10 VENT ANTI-LIFT DEVICE

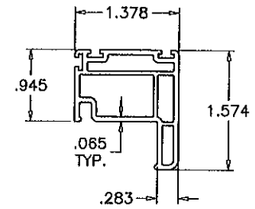

6 VENT TOP & BOTTOM RAIL

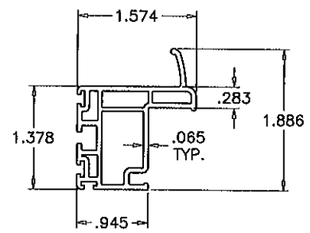

4 VENT LOCK STILE

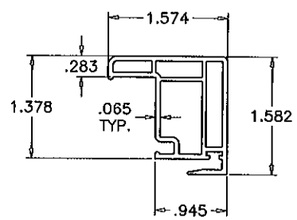

5 VENT INTERLOCK STILE

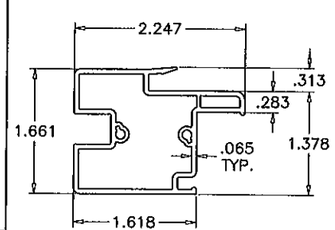

7 FIXED INTERLOCK STILE

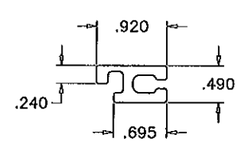

11 VENT REINFORCEMENT

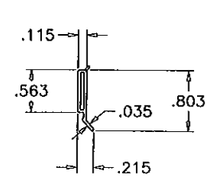

8 GLAZING BEAD

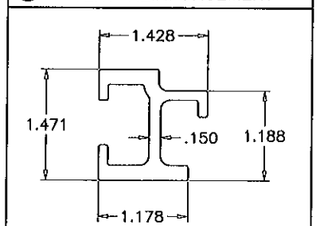

12 FIX. INTERLOCK REINF.

ITEM	PART #	QUANTITY	DESCRIPTION	MATERIAL	MANF./SUPPLIER/REMARKS
1	YV-10101	1	FLANGE FRAME	PVC	–
1A	YV-10101	2	FLUSH FRAME	PVC	–
1B	YV-10101	1	FIN FRAME	PVC	–
4	YV-10003	2	VENT LOCK STILE	PVC	–
5	YV-10004	2	VENT INTERLOCK STILE	PVC	–
6	YV-10005	4	VENT TOP & BOTTOM RAIL	PVC	–
7	YV-10006	2	FRAME FIXED INTERLOCK	PVC	–
8	YV-10007	12	GLAZING BEAD	PVC	–
9	YV-10102	1	ROLLER TRACK	PVC	–
10	YV-10102	2/VENT	VENT ANTI-LIFT DEVICE (4" LONG, AT TOP)	PVC	–
11	YE-1104	4/VENT	VENT REINFORCEMENT	6063-T6	–
12	YE-1103	1 EACH	FIXED INTERLOCK REINFORCEMENT	6063-T6	–
13	YH-1609	2/VENT	ROLLER ASSEMBLY (MOD. 110-2402-92)	NYLON/BRASS	RO-MAI
16	YH-1316	AS REQ'D.	ø 3/8" HOLE PLUG (MOD. C-13856)	NYLON	ASHLAND
17	YH-602	AS REQ'D.	.187" x .330" FIN SEAL WEATHERSTRIP	–	ULTRAFAB
20	YH-595	2/VENT	SWEEP LOCK (MOD. 677208)	–	DECO
21	YH-597	2/VENT	FACE MOUNTED KEEPER (MOD. 677133)	–	DECO
22	YH-1610	2	WEEP HOLE COVER	–	ASHLAND
24	YF-82	2/KEEPER	#6 x 3/4" F.H. TEK. SQ.DR. KEEPER SCREW	CAD PLATED CRS.	–
25	YF-83	2/LOCK	#8 x 7/8" F.H. TEK. PH.DR. SWEEP LOCK SCREW	CAD PLATED CRS.	–
26	YF-78SH	4	#8 x 2-1/2" P.H. SS. SQ.DR. FIXED MR. SCREW	S. STEEL	–
30	YF-21SS	5/VENT	#8 x 1/2" P.H. SS. PH.DR. FIXED MR. REINF. SCREW	S. STEEL	–

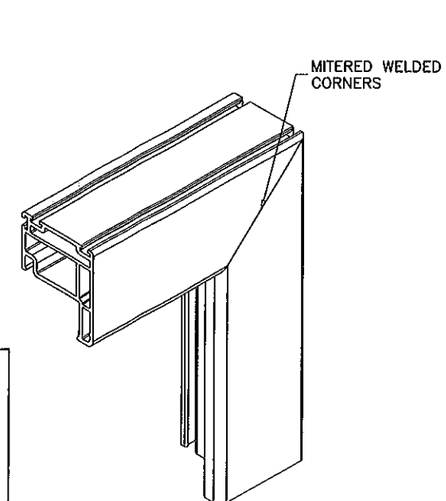

VENT CORNERS

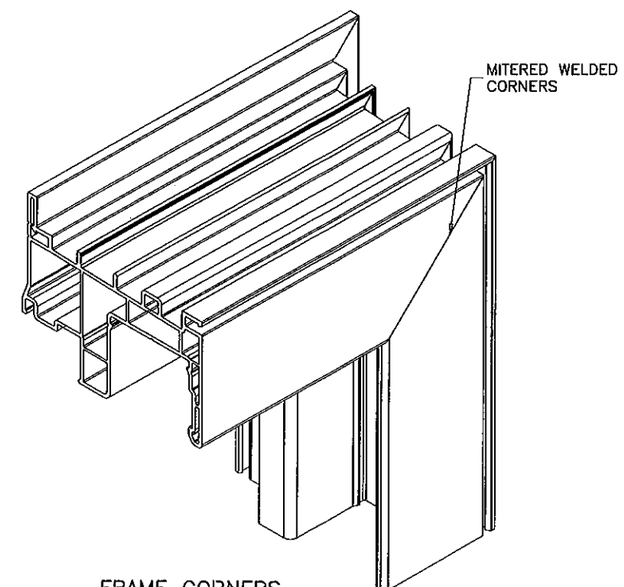

FRAME CORNERS

Engr: JAVAD AHMAD
CIVIL
FLA. RE # 70592
C.A.N. 3538

JAN 17 2014

PRODUCT REVISED
as complying with the Florida
Building Code
Acceptance No 12-0118.24
Expiration Date JAN. 6, 2015
By Manuel Perez
Miami Dade Product Control

AL-FAROOQ CORPORATION
ENGINEERS & PRODUCT DEVELOPMENT
1235 S.W. 87 AVE
MIAMI, FLORIDA 33174
TEL. (305) 264-8100 FAX. (305) 262-6978

COMP-ANL\W09-49AWP

SERIES 10100 PVC HORIZ. SLIDING WDW. (N.I.)

TRULITE WINDOW & DOOR SOLUTIONS, LLC
8130 N.W. 74TH AVE.
MEDLEY, FL. 33166
TEL. (305) 887-2646 FAX (305) 883-1309

revisions:

no	date	by	description
A	05.06.10		MANUF. NAME REVISED
B	12.23.11		MANUF. NAME REVISED

date: 09-17-09
scale: 1/2" = 1"
dr. by: HAMID
chk. by:

drawing no.
W09-49

sheet 8 of 8