MIAMI-DADE COUNTY
DEPARTMENT OF PERMITTING, ENVIRONMENT, AND REGULATORY AFFAIRS (PERA)
BOARD AND CODE ADMINISTRATION DIVISION

MIAMI-DADE COUNTY
PRODUCT CONTROL SECTION
11805 SW 26 Street, Room 208
Miami, Florida 33175-2474
T (786) 315-2590 F (786) 315-2599
www.miamidade.gov/pera/

NOTICE OF ACCEPTANCE (NOA)

Trulite Window & Door Solutions, LLC
8130 NW 74th Avenue
Medley, FL 33166

SCOPE:

This NOA is being issued under the applicable rules and regulations governing the use of construction materials. The documentation submitted has been reviewed and accepted by Miami-Dade County PERA -Product Control Section to be used in Miami Dade County and other areas where allowed by the Authority Having Jurisdiction (AHJ).

This NOA shall not be valid after the expiration date stated below. The Miami-Dade County Product Control Section (In Miami Dade County) and/or the AHJ (in areas other than Miami Dade County) reserve the right to have this product or material tested for quality assurance purposes. If this product or material fails to perform in the accepted manner, the manufacturer will incur the expense of such testing and the AHJ may immediately revoke, modify, or suspend the use of such product or material within their jurisdiction. PERA reserves the right to revoke this acceptance, if it is determined by Miami-Dade County Product Control Section that this product or material fails to meet the requirements of the applicable building code.

This product is approved as described herein, and has been designed to comply with the Florida Building Code, including the High Velocity Hurricane Zone.

DESCRIPTION: Series "La Francais"Aluminum Outswing French Doors w/ wo sidelites

APPROVAL DOCUMENT: Drawing No. **W97-18 Rev K**, titled "Series" LA FRANCIAS" Alum French Doo w/ sidelite (N.I.)", sheets 1 through 8 of 8, dated MAR 20, 2012, prepared by AL-Farooq Corporation, signed and sealed by Javad Ahmad, P.E., bearing the Miami-Dade County Product Control Revision stamp with the Notice of Acceptance number and expiration date by the Miami-Dade County Product Control Section.

MISSILE IMPACT RATING: None. Approved Hurricane Protection Devices, complying w/FBC, as applicable are required.

Limitations:

1. Lower design pressure of doors or sidelite shall control when mulled together. See applicable jamb OC spacing requirement in sheet 2. The max OC anchor at sidelite jamb over 42" wide sidelite must not exceed =14".
2. Wedge gasket item # 13 (YH-621) is Tekno Apex Co's mat'l, Apex-3174 by Meltpoint Plastic, Inc.

LABELING: Each unit shall bear a permanent label with the manufacturer's name or logo, city, state and series and following statement: "Miami-Dade County Product Control Approved", unless otherwise noted herein.

RENEWAL of this NOA shall be considered after a renewal application has been filed and there has been no change in the applicable building code negatively affecting the performance of this product.

TERMINATION of this NOA will occur after the expiration date or if there has been a revision or change in the materials, use, and/or manufacture of the product or process. Misuse of this NOA as an endorsement of any product, for sales, advertising or any other purposes shall automatically terminate this NOA. Failure to comply with any section of this NOA shall be cause for termination and removal of NOA.

ADVERTISEMENT: The NOA number preceded by the words Miami-Dade County, Florida, and followed by the expiration date may be displayed in advertising literature. If any portion of the NOA is displayed, then it shall be done in its entirety.

INSPECTION: A copy of this entire NOA shall be provided to the user by the manufacturer or its distributors and shall be available for inspection at the job site at the request of the Building Official.

This NOA **revises NOA # 11-0222.02** (former Arch Windows, LLC dba AWP) and consists of this page 1 and evidence pages E-1 & E-2, as well as approval document mentioned above.

The submitted documentation was reviewed by **Ishaq I. Chanda, P.E.**

MIAMI-DADE COUNTY APPROVED
3/21/12

NOTICE OF ACCEPTANCE: EVIDENCE SUBMITTED

A. DRAWINGS

1. Manufacturer's die drawings and sections(transferred from file # **11-0222.02)**
2. Drawing No. Drawing No. **W97-18 Rev K**, titled "Series" LA FRANCIAS" Alum French Doo w/ sidelite (N.I.)", sheets 1 through 8 of 8, dated MAR 20, 2012, prepared by AL-Farooq Corporation, signed and sealed by Javad Ahmad, P.E.

Note: This revision consists of FBC 2010 notes, gasket spec & Co. name change)

B. TESTS (transferred from file #**11-0222.02, 10-0518.07 &** ***09-0316.06***)

1. Test reports on: 1) Air Infiltration Test, per FBC, TAS 202-94
   2) Uniform Static Air Pressure Test, Loading per FBC TAS 202-94
   3) Water Resistance Test, per FBC, TAS 202-94
   4) Forced Entry Test, per FBC 3603.2 (b) and TAS 202-94

   along with marked-up drawings and installation diagram of an aluminum French door w/sidelites, OXXO configuration, prepared by Hurricane Engineering & Testing Inc., Test Report No. **HETI 04-1402**, dtd 09/17/04 signed and sealed by Ivonne Ghia, P.E.
2. Test reports on: 1) Air Infiltration Test, per PA 202-94
   2) Uniform Static Air Pressure Test, Loading per PA 202-94
   3) Water Resistance Test, per PA 202-94
   4) Forced Entry Test, per SFBC 3603.2 (b) and PA 202-94

   along with installation diagram of an aluminum outswing French entrance door w/sidelites prepared by Fenestration Testing Laboratory, Inc, Test Report No. **FTL-1659,** dated June 18, 1997, reissued on 6/11/98, signed and sealed by late Gilbert Diamond, P.E. *(Submitted under previous NOA* ***#97-0815.09/05-0426.03****Yale Ogron Mfg. Co.)*

C. CALCULATIONS

1. Statement letter dated Jan 06, 2012 compliance to FBC 2010, prepared by Al-Farooq Corporation, signed and sealed by Javad Ahmad, P.E.
2. Anchor verification calculations and structural analysis, complying with FBC-2007, prepared by Al Farooq Corporation, dated 03/04/09 and last revised on May 07, 2010, signed and sealed by Javad Ahmad, P.E. (transferred from file # **11-0222.02)**
3. Glazing complies w/ ASTME-1300-02 & -04

D. QUALITY ASSURANCE

1. Miami Dade Department of Permitting, Environment, and Regulatory Affairs (PERA).

E. MATERIAL CERTIFICATIONS

1. Technical material properties data sheet from Tekno Apex Co's APEX-3174, flexible PVC per ASTMD- 2240, ASTMD638 and ASTMD2240.

Ishaq I. Chanda

Ishaq I. Chanda, P.E.
Product Control Examiner
NOA No 12-0118.32
Expiration Date: July 22, 2016
Approval Date: March 22, 2012

NOTICE OF ACCEPTANCE: EVIDENCE SUBMITTED

F. STATEMENTS

1. Statement letter of conformance to FBC 2010 and "No change except code revision notes & Company name change", prepared by Al-Farooq Corporation, dated 01/06/12, signed and sealed by Javad Ahmad, P.E.
2. Statement letter of conformance FBC 2007and letter of no financial interest, prepared by Al-Farooq Corporation, dated 05/07/10, signed and sealed by Javad Ahmad, P.E. (transferred from file # **11-0222.02**)
3. Statement letter of compliance, part of the above referenced test reports.
4. Sales agreement between AWP, LLC (seller) and Arch Aluminum & Glass Enterprise, a Delaware Corp (purchaser) dated Jan 14, 2010, signed by Leon J. Silverstein and Wm, Robert Wright, respectively.
5. Certificate of registration of Arch Windows, LLC in State of Delaware, dated 02-03-10.
6. Certificate of registration of Arch Windows, LLC (Delaware) in State of Florida dated 02-04, 2010, managed by Arch Intermediate Holding, LLC.
7. Florida Dept of State, listing of Arch Window, LLC (Foreign Limited Liability Co.), managed by Arch Intermediate Holding, LLC, Tamarac, Fl.
8. Asset purchase agreement dated 11/01/06 among AWP, LLC (Buyer) and Yale Ogron Windows & Door Inc. (seller), signed by Leon J. Silverstein and Manny Valladares, respectively.
9. Statement letter dated March 25, 2010, issued by Arch Windows, LLC that it has purchased all assets of AWP, LLC effectively Jan 29, 2010, signed by Leon Silverstein, President/CEO (Arch Windows, LLC).

G. OTHER

1. This NOA **revises** NOA # **11-0222.02**, expiring on July 22, 2016.
2. Test proposal, dated 06-14-00, 09-20-01 and 11-06-07, approved by BCCO.

Ishaq I. Chanda

Ishaq I. Chanda, P.E.
Product Control Examiner
NOA No 12-0118.32
Expiration Date: July 22, 2016
Approval Date: March 22, 2012

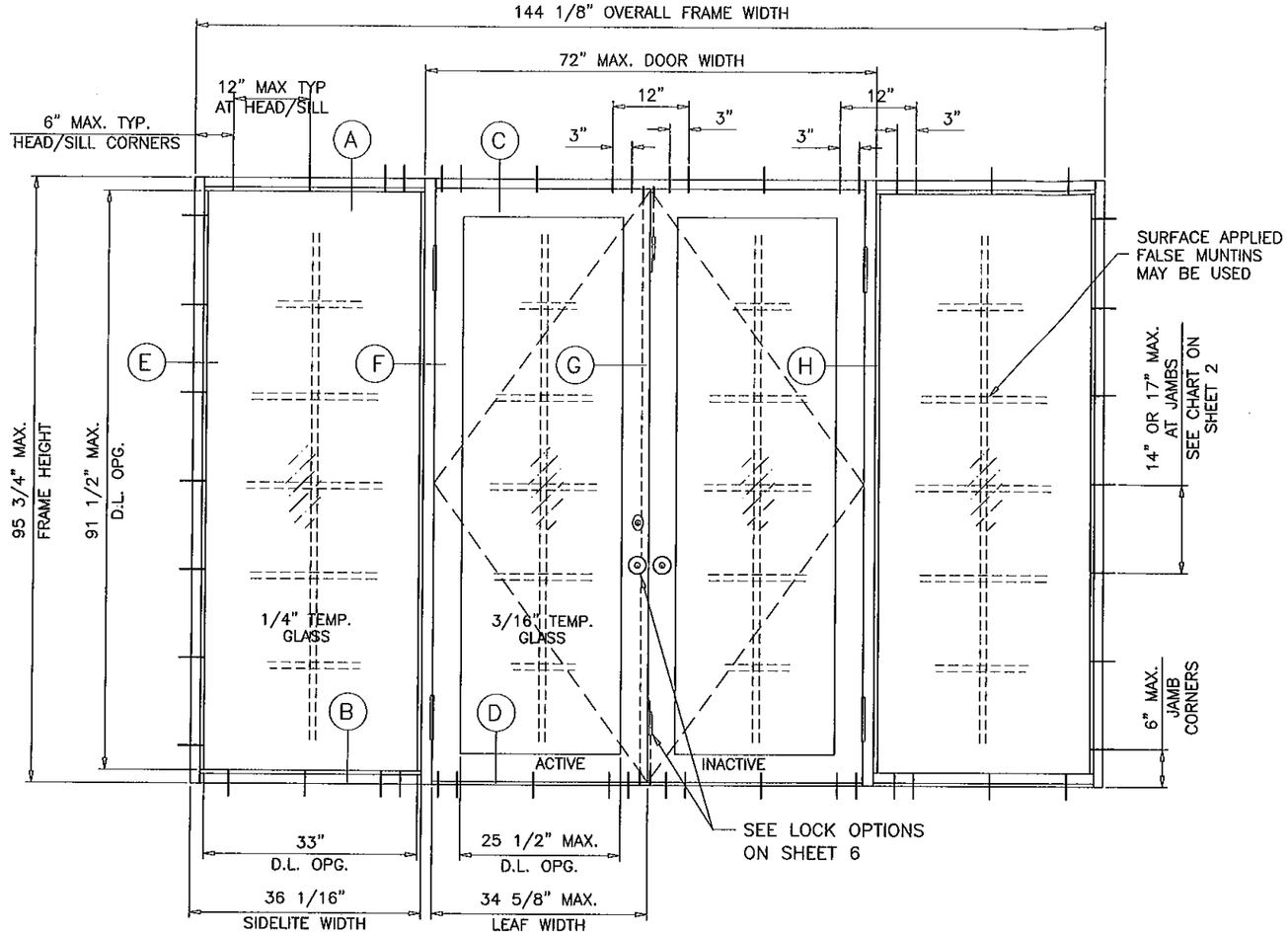

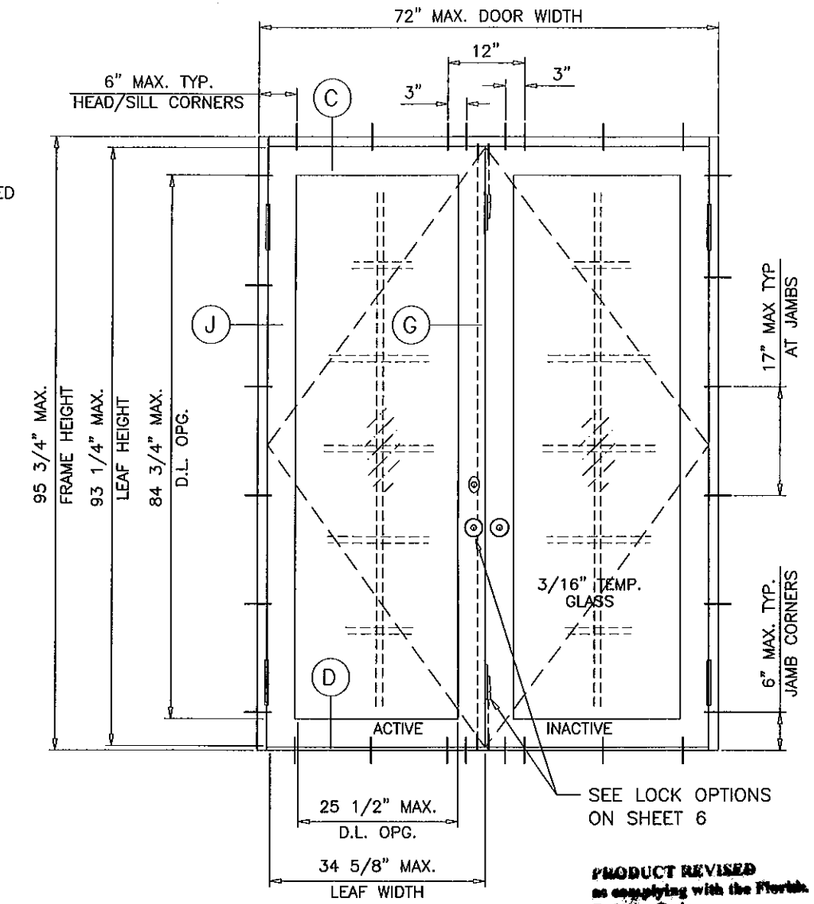

TYPICAL ELEVATIONS

GLASS D.L.O. DIMS.

D.L.O. HEIGHT (DOOR) = LEAF HEIGHT − 8.50"
D.L.O. WIDTH (DOOR) = LEAF WIDTH − 9.125"
D.L.O. HEIGHT (SIDELITE) = FRAME HEIGHT − 4.250"
D.L.O. WIDTH (SIDELITE) = SIDELITE WIDTH − 3.0625"

PRODUCT REVISED
as complying with the Florida Building Code
Acceptance No. 12-0118.32
Expiration Date July 22, 2016
By Ishay I. Chayet
Manager Product Control

SERIES 'LA FRANCAIS' ALUM FRENCH DOOR W/ SIDELITES

APPROVAL APPLIES TO SINGLE (X) AND DOUBLE (XX) LEAF DOORS WITH OR WITHOUT SIDELITES.
SIDE LITES CAN BE ON ONE OR BOTH SIDES OF DOOR.
SEE SHEET 2 FOR DESIGN LOAD CAPACITIES.

THIS PRODUCT HAS BEEN DESIGNED AND TESTED TO COMPLY WITH THE REQUIREMENTS OF THE FLORIDA BUILDING CODE INCLUDING HIGH VELOCITY HURRICANE ZONE (HVHZ).

1BY OR 2BY WOOD BUCKS BY OTHERS, MUST BE ANCHORED PROPERLY TO TRANSFER LOADS TO THE STRUCTURE.

ANCHORS SHALL BE AS LISTED, SPACED AS SHOWN ON DETAILS, ANCHORS EMBEDMENT TO BASE MATERIAL SHALL BE BEYOND WALL DRESSING OR STUCCO.

ANCHORING OR LOADING CONDITIONS NOT SHOWN IN THESE DETAILS ARE NOT PART OF THIS APPROVAL.

A LOAD DURATION INCREASE IS USED IN DESIGN OF ANCHORS INTO WOOD ONLY.

MATERIALS INCLUDING BUT NOT LIMITED TO STEEL/METAL SCREWS, THAT COME INTO CONTACT WITH OTHER DISSIMILAR MATERIALS SHALL MEET THE REQUIREMENTS OF THE FLORIDA BLDG. CODE SECTION 2003.8.4.

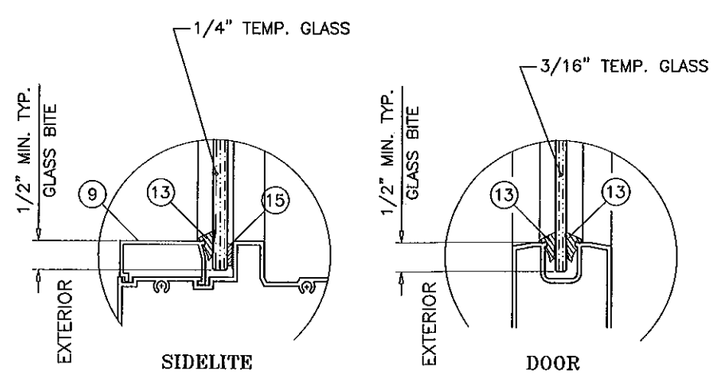

GLAZING DETAIL

DOORS NOT RATED FOR IMPACT.
INSTALLATION OF THIS PRODUCT IN THE HVHZ AREA REQUIRES THE USE OF APPROVED SHUTTERS OR EXTERNAL PROTECTION DEVICES COMPLYING WITH HVHZ REQUIREMENTS.
INSTALLATION OF THIS SYSTEM OUTSIDE THE HVHZ AREA SHALL MEET THE APPLICABLE REQUIREMENTS FOR WIND BORNE DEBRIS PROTECTION.

MONOLITHIC GLASS
NON IMPACT

Engr: JAVAD AHMAD
CIVIL
FLA. PE # 70592
C.A.N. 3538
MAR 20 2012

AL-FAROOQ CORPORATION
ENGINEERS & PRODUCT DEVELOPMENT
1235 S.W. 87 AVE
MIAMI, FLORIDA 33174
TEL. (305) 264-8100 FAX. (305) 262-6978

COMP-ANL\W97-18AWP

SERIES 'LA FRANCAIS' ALUM FRENCH DOOR W/ SIDELITES (N.I.)

TRULITE WINDOW & DOOR SOLUTIONS, LLC
8130 N.W. 74TH AVE.
MEDLEY, FL. 33166
TEL. (305) 887-2646 FAX (305) 883-1309

revisions:

no	date	by	description
H	02.23.09		UPDATED FOR 2007 FBC
I	05.06.10		MANUF. NAME REVISED
J	04.28.11		REV. PER BNC COMMENTS
K	12.23.11		UPDATED TO 2010 FBC, NAME REV

date: 08-05-97
scale: 3/8" = 1"
dr. by: HAMID
chk. by:

drawing no.
W97-18

CHART 'A'

DOORS WITHOUT SIDELITES				
DESIGN LOAD CAPACITY – PSF				
NOM. DOOR HT. FT./IN.	NOMINAL DOOR WIDTH FT./IN.		3/16" TEMP. GLASS	
			EXT. (+)	INT. (–)
6/8	2/6 (X)	5/0 (XX)	70.0	100.9
	3/0 (X)	6/0 (XX)	70.0	84.0
7/0	2/6 (X)	5/0 (XX)	70.0	96.0
	3/0 (X)	6/0 (XX)	70.0	80.0
8/0	2/6 (X)	5/0 (XX)	70.0	84.0
	3/0 (X)	6/0 (XX)	70.0	70.0

CHART 'B'

STATIONARY PANEL (O) OR DOORS WITH SIDELITES						
DESIGN LOAD CAPACITY – PSF						
FRAME HEIGHT FT./IN.	DOOR WIDTH FT./IN.	SIDELITE WIDTH INCHES	1/4" TEMP. GLASS			
			EXT. (+)	INT. (–)	EXT. (+)	INT. (–)
6/8	2/6 (X) 5/0 (XX)	30	70.0	100.9	–	–
		36	70.0	92.7	–	–
		42	70.0	79.5	–	–
		48	70.0	70.0	70.0	84.4
		54	61.8	61.8	70.0	75.0
	3/0 (X) 6/0 (XX)	30	70.0	84.0	–	–
		36	70.0	84.0	–	–
		42	70.0	79.5	–	–
		48	70.0	70.0	70.0	83.3
7/0	2/6 (X) 5/0 (XX)	30	70.0	96.0	–	–
		36	70.0	91.6	–	–
		42	70.0	79.5	–	–
		48	70.0	70.0	70.0	80.1
	3/0 (X) 6/0 (XX)	30	70.0	80.0	–	–
		36	70.0	80.0	–	–
		42	70.0	79.2	–	–
8/0	2/6 (X) 5/0 (XX)	30	70.0	73.7	–	–
		36	67.6	67.6	–	–
		42	62.8	62.8	–	–
	3/0 (X) 6/0 (XX)	30	67.6	67.6	–	–
		36	62.5	62.5	–	–
			JAMB ANCHOR SPACING = 17" MAX.		JAMB ANCHOR SPACING = 14" MAX.	

NOTE:
GLASS CAPACITIES ON THIS SHEET ARE BASED ON ASTM E1300–04 (3 SEC. GUSTS) AND FLORIDA BUILDING COMMISSION DECLARATORY STATEMENT DCA05–DEC–219

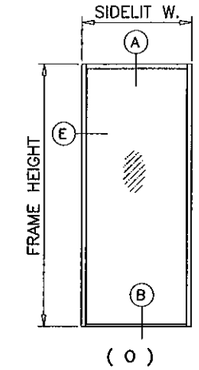

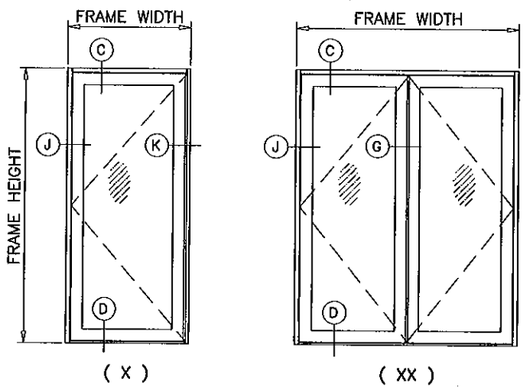

NOTE:
FOR DOORS CAPACITIES SEE CHART 'A'
FOR SIDELITE CAPACITIES SEE CHART 'B'.
LOWER VALUES FROM DOOR OR SIDELITE CHART WILL APPLY TO ENTIRE SYSTEM.

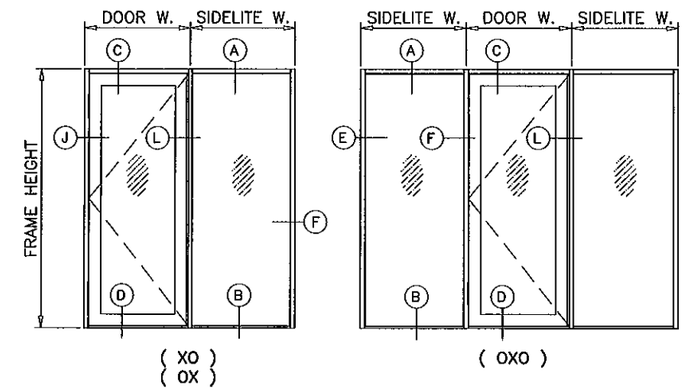

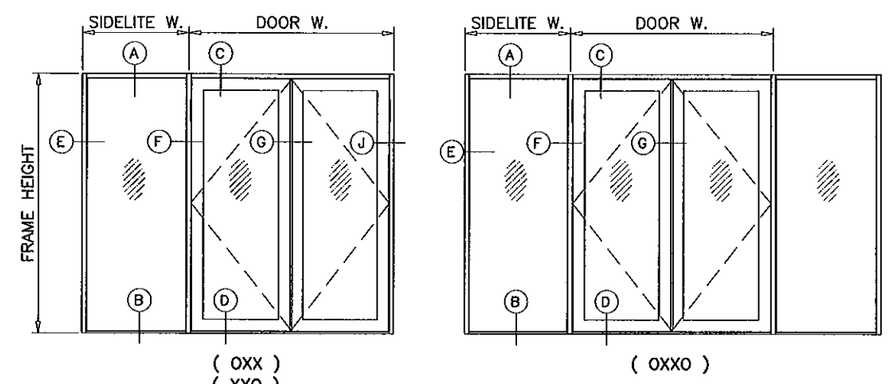

OVERALL DOOR DIMENSIONS:

NOMINAL WIDTH	FRAME WIDTH
2/6 (X)	31–1/2"
3/0 (X)	37–1/2"
5/0 (XX)	60"
6/0 (XX)	72"

NOMINAL HEIGHT	FRAME HEIGHT
6/8	79–3/4"
7/0	83–3/4"
8/0	95–3/4"

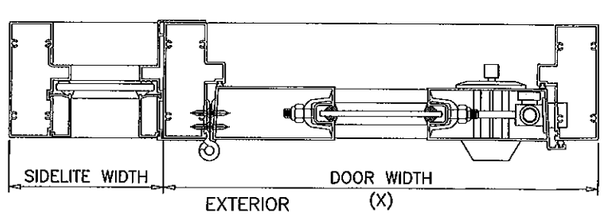

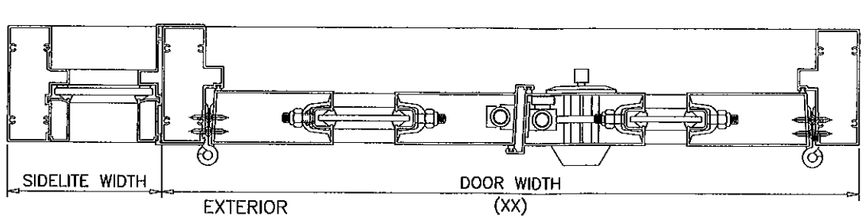

Engr: JAVAD AHMAD
CIVIL
FLA. PE # 70592
C.A.N. 3538

MAR 2 0 2012

PRODUCT REVISED
as complying with the Florida Building Code
Acceptance No 12-0118.32
Expiration Date 7/22/16
By Ishan I. Chand
Manuf Dade/Product Control

AL-FAROOQ CORPORATION
ENGINEERS & PRODUCT DEVELOPMENT
1235 S.W. 87 AVE
MIAMI, FLORIDA 33174
TEL. (305) 264-8100 FAX. (305) 262-6978
COMP-ANL\W97-18AWP

SERIES 'LA FRANCAIS' ALUM FRENCH DOOR W/ SIDELITES (N.I.)
TRULITE WINDOW & DOOR SOLUTIONS, LLC
8130 N.W. 74TH AVE.
MEDLEY, FL. 33166
TEL. (305) 887-2646 FAX (305) 883-1309

revisions:

no	date	by	description
H	02.23.09		UPDATED FOR 2007 FBC
I	05.06.10		MANUF. NAME REVISED
J	04.28.11		REV. PER BNC COMMENTS
K	12.23.11		MANUF. NAME REVISED

date: 08–05–97
scale: 3/8" = 1"
dr. by: HAMID
chk. by:

drawing no.
W97–18

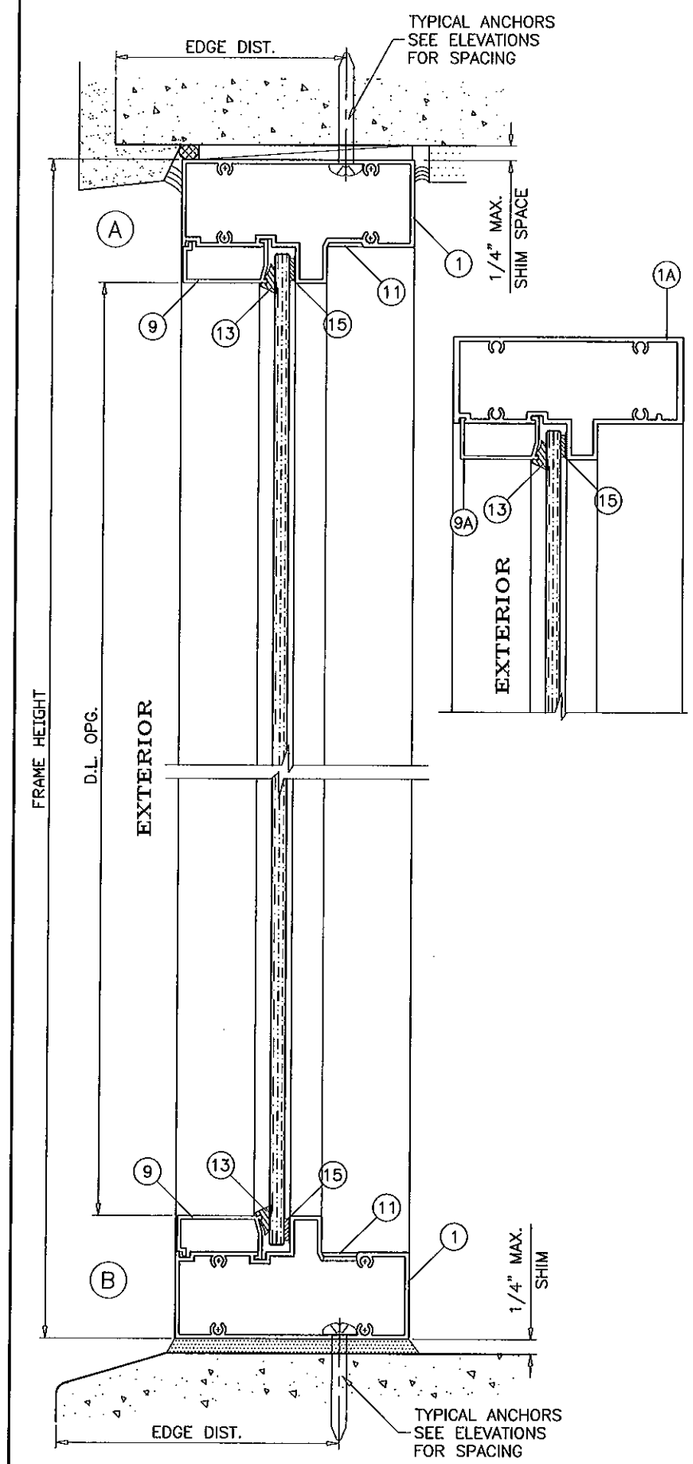

STATIONARY UNITS

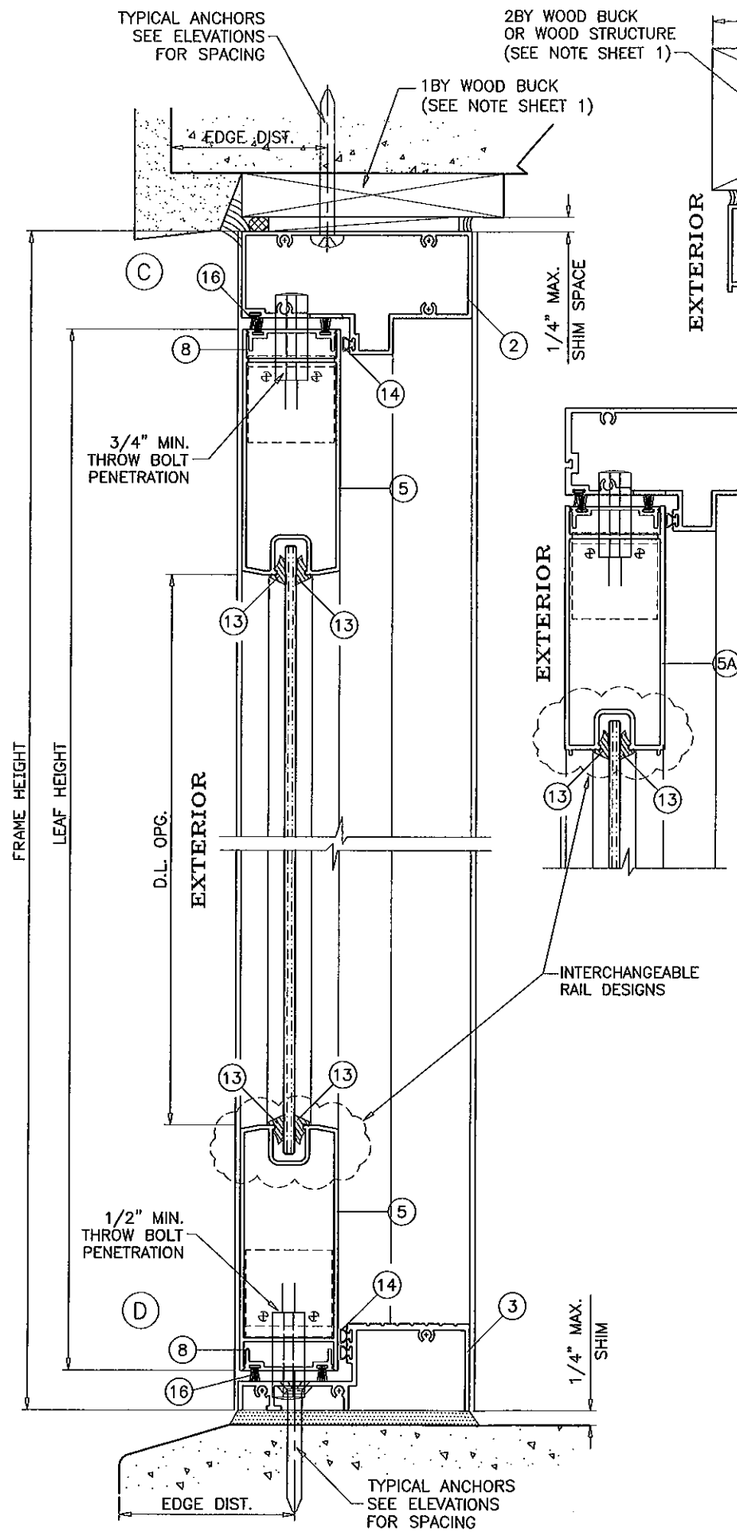

OPERABLE UNITS

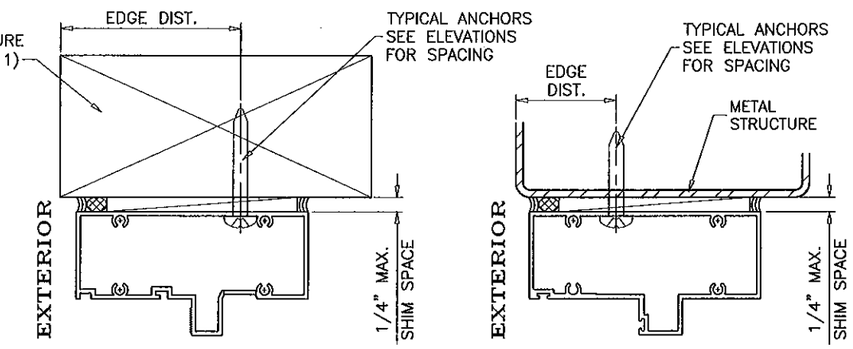

WOOD BUCKS AND METAL STRUCTURE NOT BY TRULITE MUST SUSTAIN LOADS IMPOSED BY GLAZING SYSTEM AND TRANSFER THEM TO THE BUILDING STRUCTURE.

TYPICAL ANCHORS: SEE ELEV. FOR SPACING

1/4" DIA. TAPCON BY 'ITW'

1/4" DIA. ULTRACON BY 'ELCO' (Fu=177 KSI, Fy=155 KSI)

INTO 2BY WOOD BUCKS OR WOOD STRUCTURES
1-1/2" MIN. PENETRATION INTO WOOD

THRU 1BY BUCKS INTO CONC. OR MASONRY
1-1/4" MIN. EMBED INTO CONC. OR MASONRY

DIRECTLY INTO CONC. OR MASONRY
1-1/4" MIN. EMBED INTO CONC. OR MASONRY

#14 SMS OR SELF DRILLING SCREWS (GRADE 2 CRS)

INTO MIAMI-DADE COUNTY APPROVED MULLIONS (MIN. THK.=1/8")

INTO METAL STRUCTURES
STEEL : 1/8" THK. MIN. (Fy = 36 KSI MIN.)
ALUMINUM : 1/8" THK. MIN. (6063-T5 MIN.)
(STEEL IN CONTACT WITH ALUMINUM TO BE PLATED OR PAINTED)

TYPICAL EDGE DISTANCE

INTO CONCRETE AND MASONRY = 2-1/2" MIN.
INTO WOOD STRUCTURE = 1" MIN.
INTO METAL STRUCTURE = 3/4" MIN.

CONCRETE f'c = 3000 PSI MIN.
MASONRY f'm = 1500 PSI MIN.

PRODUCT REVISED
In complying with the Florida Building Code
Application No. 12-0118.32
Expiration Date 7/22/16
Chief, Bureau Product Control

SEALANT:

ALL JOINTS AND FRAME CONNECTIONS SEALED WITH WHITE/ALUMINUM COLORED SILICONE.

Engr: JAVAD AHMAD
CIVIL
FLA. PE # 70592
C.A.N. 3538

MAR 20 2012

AL-FAROOQ CORPORATION
ENGINEERS & PRODUCT DEVELOPMENT
1235 S.W. 87 AVE
MIAMI, FLORIDA 33174
TEL. (305) 264-8100 FAX. (305) 262-6978
COMP-ANL\W97-18AWP

SERIES 'LA FRANCAIS' ALUM FRENCH DOOR W/ SIDELITES (N.L.)

TRULITE WINDOW & DOOR SOLUTIONS, LLC
8130 N.W. 74TH AVE.
MEDLEY, FL. 33166
TEL. (305) 887-2646 FAX (305) 883-1309

revisions:

no	date	by	description
H	02.23.09		UPDATED FOR 2007 FBC
I	05.06.10		MANUF. NAME REVISED
J	04.28.11		REV. PER BNC COMMENTS
K	12.23.11		MANUF. NAME REVISED

date: 08-05-97
scale: 3/8" = 1"
dr. by: HAMID
chk. by:

drawing no.
W97-18

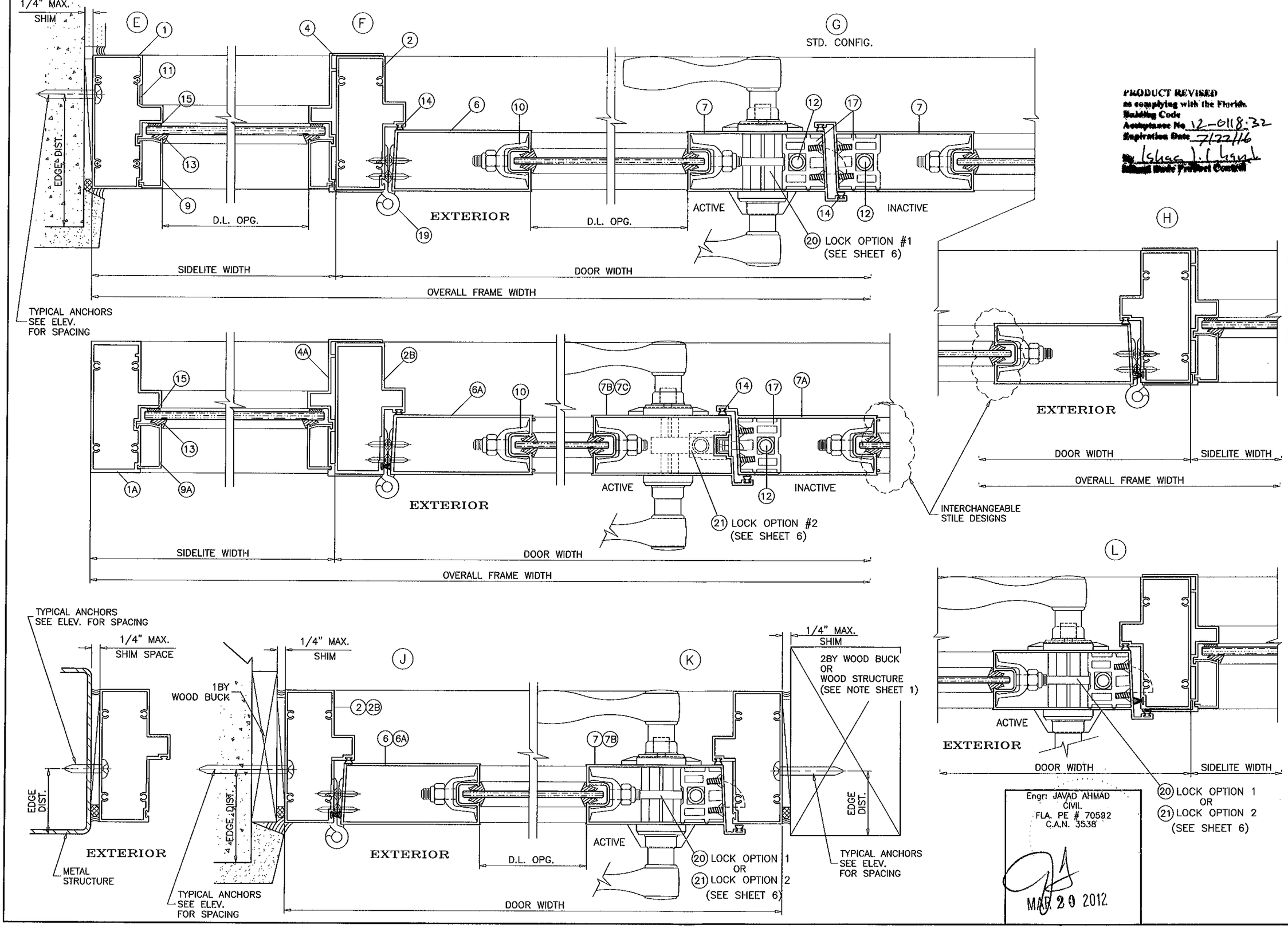

PRODUCT REVISED
as complying with the Florida Building Code
Acceptance No. 12-0118.32
Expiration Date 7/22/16
By Ishac J. Chaul
Miami Dade Product Control

Engr: JAVAD AHMAD
CIVIL
FLA. PE # 70592
C.A.N. 3538

MAR 20 2012

AL-FAROOQ CORPORATION
ENGINEERS & PRODUCT DEVELOPMENT
1235 S.W. 87 AVE
MIAMI, FLORIDA 33174
TEL. (305) 264-8100 FAX. (305) 262-6978
COMP-ANL\W97-18AWP

SERIES 'LA FRANCAIS' ALUM FRENCH DOOR W/ SIDELITES (N.I.)

TRULITE WINDOW & DOOR SOLUTIONS, LLC
8130 N.W. 74TH AVE.
MEDLEY, FL. 33166
TEL. (305) 887-2646 FAX (305) 883-1309

revisions:

no	date	by	description
H	02.23.09		UPDATED FOR 2007 FBC
I	05.06.10		MANUF. NAME REVISED
J	04.28.11		REV. PER BNC COMMENTS
K	12.23.11		MANUF. NAME REVISED

date: 08-05-97
scale: 3/8" = 1"
dr. by: HAMID
chk. by:

drawing no. W97-18

sheet 4 of 8

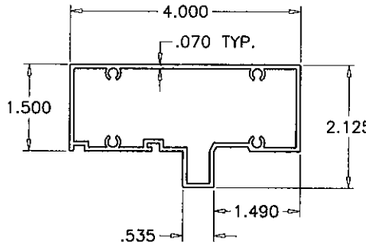

① SIDELITE HEAD/SILL/JAMB

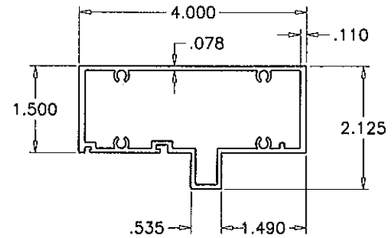

(1A) ALT. SIDELITE HEAD/SILL/JAMB

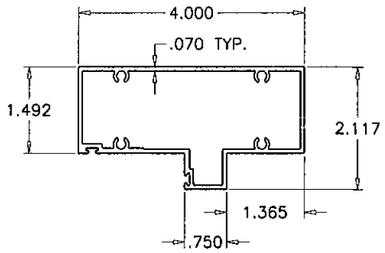

② DOOR HEAD/JAMB

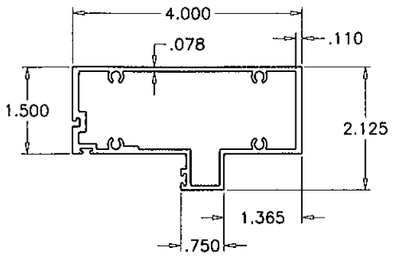

(2A) ALT. DOOR HEAD

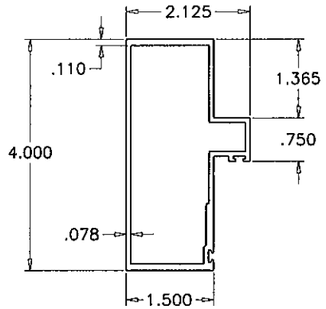

(2B) ALT. DOOR JAMB

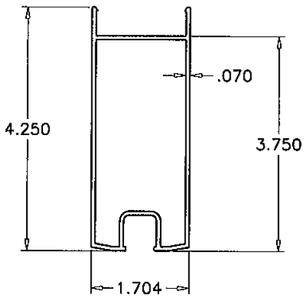

⑤ TOP/BOTTOM RAIL

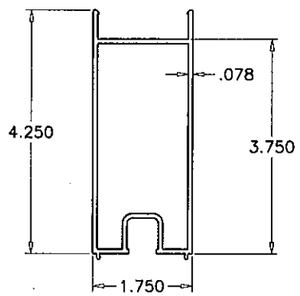

(5A) ALT. TOP/BOTTOM RAIL

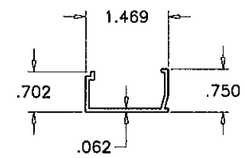

⑨ GLAZING STOP

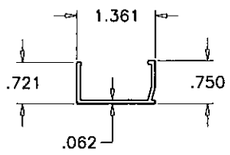

(9A) ALT. GLAZING STOP

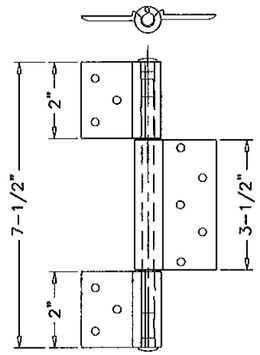

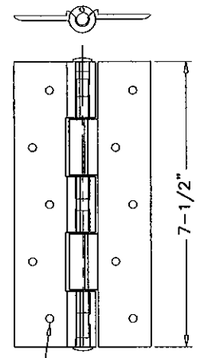

10-24 F.H.M.S.
STAINLESS STEEL
(THREAD CUTTING)

HINGES

④ SIDELITE JAMB

(4A) ALT. SIDELITE JAMB

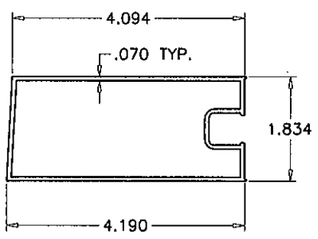

⑥ HINGE STILE

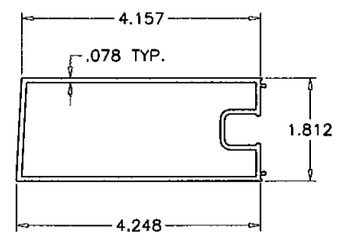

(6A) ALT. HINGE STILE

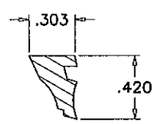

HARDNESS = 75±5 SHORE A
TENSILE STRENGTH (BREAK)= 1900 PSI
ELONGATION AT BREAK = 380%
SPECIFIC GRAVITY = 1.39

WEDGE GASKET
SCALE 1:1

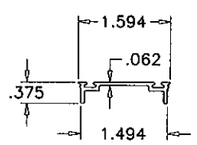

⑧ WEATHERSTRIP ADAPTER

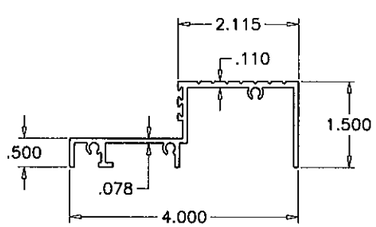

③ FRAME SILL

⑦ LOCK STILE/KEEPER STILE

(7A) ALT. LOCK STILE/KEEPER STILE

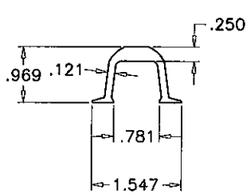

⑩ PRESSURE PLATE

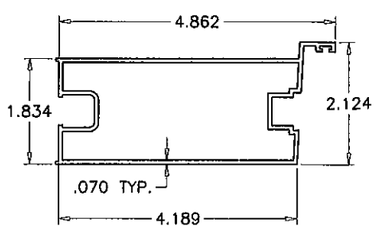

(7B) 3 POINT LOCK STILE

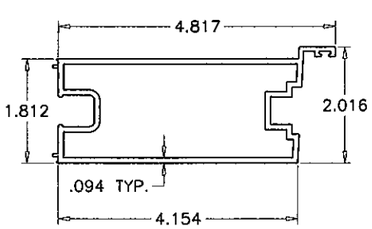

(7C) ALT. 3 POINT LOCK STILE

PRODUCT REVISED
in complying with the Florida
Building Code
Acceptance No 12-0118.22
Expiration Date 7/22/16
By [illegible]
[illegible] Building Code/Product Control

Engr: JAVAD AHMAD
CIVIL
FLA. PE # 70592
C.A.N. 3538

MAR 29 2012

AL-FAROOQ CORPORATION
ENGINEERS & PRODUCT DEVELOPMENT
1235 S.W. 87 AVE
MIAMI, FLORIDA 33174
TEL. (305) 264-8100 FAX. (305) 262-6978
COMP-ANL\W97-18AWP

SERIES 'LA FRANCAIS' ALUM FRENCH DOOR W/ SIDELITES (N.L.)

TRULITE WINDOW & DOOR SOLUTIONS, LLC
8130 N.W. 74TH AVE.
MEDLEY, FL. 33166
TEL. (305) 887-2646 FAX (305) 883-1309

revisions:

no	date	by	description
H	02.23.09		UPDATED FOR 2007 FBC
I	05.06.10		MANUF. NAME REVISED
J	04.28.11		NO CHANGE THIS SHEET
K	12.23.11		MANUF. NAME REVISED

date: 08-05-97
scale: 3/8" = 1"
dr. by: HAMID
chk. by:

drawing no.
W97-18

LOCK OPTIONS:

OPTION #1

STANDARD LOCK SET AND CYLINDER DEAD BOLT LATCH (FOR PRE-FABRICATED LOCK STILE PART No. YE-802, WITH 2-1/8" BORE AND 2-3/8" BACKSET TO FIT STANDARD LOCK SET), KEY OPERATED ON THE EXTERIOR AND THUMB TURN ON THE INTERIOR AT EACH ACTIVE LEAF .

MANUFACTURER'S MANUALLY OPERATED CONCEALED ZINC DIE-CAST FLUSH BOLT ASSEMBLY WITH STEEL EXTENSION ROD, ALUMINUM FLUSH BOLT GUIDE, STAINLESS STEEL FLUSH BOLT ADJUSTMENT PLATE AND PROTECTIVE MOLDED PLASTIC BOX FOR FLUSHBOLT AT THRESHOLD, AT 10-1/2" FROM TOP & BOTTOM OF ACTIVE & INACTIVE LEAFS.

OPTION #2

MANUFACTURER'S STEEL THREE POINT LOCK MECHANISM ALTERNATE TO STANDARD LOCK SET AT ACTIVE LEAF (FOR PRE-FABRICATED LOCK STILE PART No. YE-837) WITH THROW BOLTS CONNECTED TO MORTISE LOCK SET, ENGAGING INTO FRAME HEAD AND SILL AND KEY OPERATED ON THE EXTERIOR AND THUMB TURN ON THE INTERIOR

MANUFACTURER'S MANUALLY OPERATED CONCEALED ZINC DIE-CAST FLUSH BOLT ASSEMBLY WITH STEEL EXTENSION ROD, ALUMINUM FLUSH BOLT GUIDE, STAINLESS STEEL FLUSH BOLT ADJUSTMENT PLATE AND PROTECTIVE MOLDED PLASTIC BOX FOR FLUSHBOLT AT THRESHOLD, AT 10-1/2" FROM TOP & BOTTOM OF INACTIVE LEAF.

HINGE OPTIONS:

OPTION #1

MANUFACTURER'S TWO-PART 7-1/2" LONG ALUMINUM HINGE ASSEMBLY (PART No. YH-650), TWO PER LEAF, 11-1/2" FROM LEAF TOP AND BOTTOM TO HINGE'S CENTER LINE.

OPTION #2

MANUFACTURER'S THREE-PART 7-1/2" LONG ALUMINUM HINGE ASSEMBLY (PART No. YH-658), TWO PER LEAF, 11-1/2" FROM LEAF TOP AND BOTTOM TO HINGE'S CENTER LINE.

NOTE:
TOP AND BOTTOM FLUSH BOLTS MUST BE ENGAGED DURING PERIODS OF HURRICANE WARNING.

ITEM #	PART #	QUANTITY	DESCRIPTION	MATERIAL	MANF./SUPPLIER/REMARKS
1	YE-809B	1	SIDELITE FRAME HEAD/SILL/JAMB	6063-T6	–
1A	YE-809	1	ALT. SIDELITE FRAME HEAD/SILL/JAMB	6063-T6	–
2	YE-832	1	DOOR FRAME HEAD/JAMB	6063-T6	–
2A	YE-804	1	ALT. DOOR FRAME HEAD	6063-T6	–
2B	YE-811	1	ALT. DOOR FRAME JAMB	6063-T6	–
3	YE-810	1	DOOR FRAME SILL	6063-T6	–
4	YE-808B	AS REQD.	SIDELITE JAMB	6063-T6	–
4A	YE-808	AS REQD.	ALT. SIDELITE JAMB	6063-T6	–
5	YE-801	2/ LEAF	TOP AND BOTTOM RAIL	6063-T6	–
5A	YE-801B	2/ LEAF	ALT. TOP AND BOTTOM RAIL	6063-T5	–
6	YE-803	1/ LEAF	HINGE STILE	6063-T6	–
6A	YE-803B	1/ LEAF	ALT. HINGE STILE	6063-T5	–
7	YE-802	1/ LEAF	LOCK STILE	6063-T6	–
7A	YE-802B	1/ LEAF	ALT. LOCK STILE	6063-T5	–
7B	YE-837	1/ ACTIVE LEAF	3 POINT LOCK STILE	6063-T6	–
7C	YE-815	1/ ACTIVE LEAF	ALT. 3 POINT LOCK STILE	6063-T6	–
8	YE-806	2/ LEAF	WEATHERSTRIP ADAPTER	6063-T6	–
9	YE-807	AS REQD.	GLAZING STOP	6063-T6	–
9A	YE-807B	AS REQD.	ALT. GLAZING STOP	6063-T6	–
10	YE-805	4/ LEAF	PRESSURE PLATE	6063-T6	–
11	YE-816	AS REQD.	COVER PLATE	6063-T6	–
12	YH-610	AS REQD.	FLUSH BOLT ASSY.	ZINC/STEEL	–
13	YH-621	AS REQD.	WEDGE GASKET	PVC	MELTPOINT PLASTICS INC. (TEKNOR APEX)
14	YH-622	AS REQD.	BULB WEATHERSTRIPPING (.198 X .260)	VINYL	TEAM PLASTIC
15	YH-625	AS REQD.	GLAZING TAPE (3/8" X 1/8")	–	VG100 BY VENTURE TAPE
16	YE-602	AS REQD.	FIN SEAL W'STRIPPING (.187 X .260)	–	ULTRAFAB
17	YE-842	2/ LEAF	FLUSH BOLT GUIDE, 1-1/2" LONG	6063-T6	–
18	#10 x 1"	AS REQD.	FRAME ASSY. SCREWS	–	PAN HEAD SMS
19	YH-650/658	2/ LEAF	HINGE ASSEMBLY	ALUMINUM	S.S. PIN / PLASTIC BUSHINGS
20	–	1/ ACTIVE LEAF	LOCK SET/DEAD BOLT ASSEMBLIES (STD.)	STEEL	–
21	–	1/ ACTIVE LEAF	3 POINT LOCK MECHANISM (OPTIONAL)	–	STD. LEVER OR KNOB TYPES

PRODUCT REVISED
as complying with the Florida Building Code
Acceptance No 12-0118.32
Expiration Date 7/22/16
By [illegible]
Miami Dade Product Control

Engr: JAVAD AHMAD
CIVIL
FLA. PE # 70592
C.A.N. 3538

MAR 29 2012

AL-FAROOQ CORPORATION
ENGINEERS & PRODUCT DEVELOPMENT
1235 S.W. 87 AVE
MIAMI, FLORIDA 33174
TEL. (305) 264-8100 FAX. (305) 262-6978
COMP-ANL\W97-18AWP

SERIES 'LA FRANCAIS' ALUM FRENCH DOOR W/ SIDELITES (N.L)

TRULITE WINDOW & DOOR SOLUTIONS, LLC
8130 N.W. 74TH AVE.
MEDLEY, FL. 33166
TEL. (305) 887-2646 FAX (305) 883-1309

revisions:

no	date	by	description
H	02.23.09		UPDATED FOR 2007 FBC
I	05.06.10		MANUF. NAME REVISED
J	04.28.11		REV. PER BNC COMMENTS
K	12.23.11		MANUF. NAME REVISED

date: 08-05-97
scale: 3/8" = 1"
dr. by: HAMID
chk. by:

drawing no.
W97-18

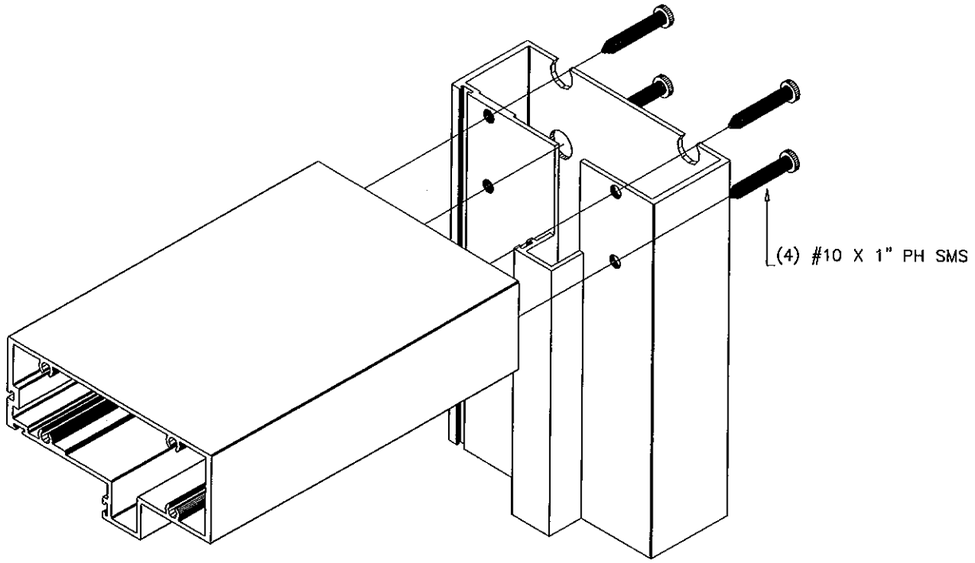

FRAME UPPER CORNER

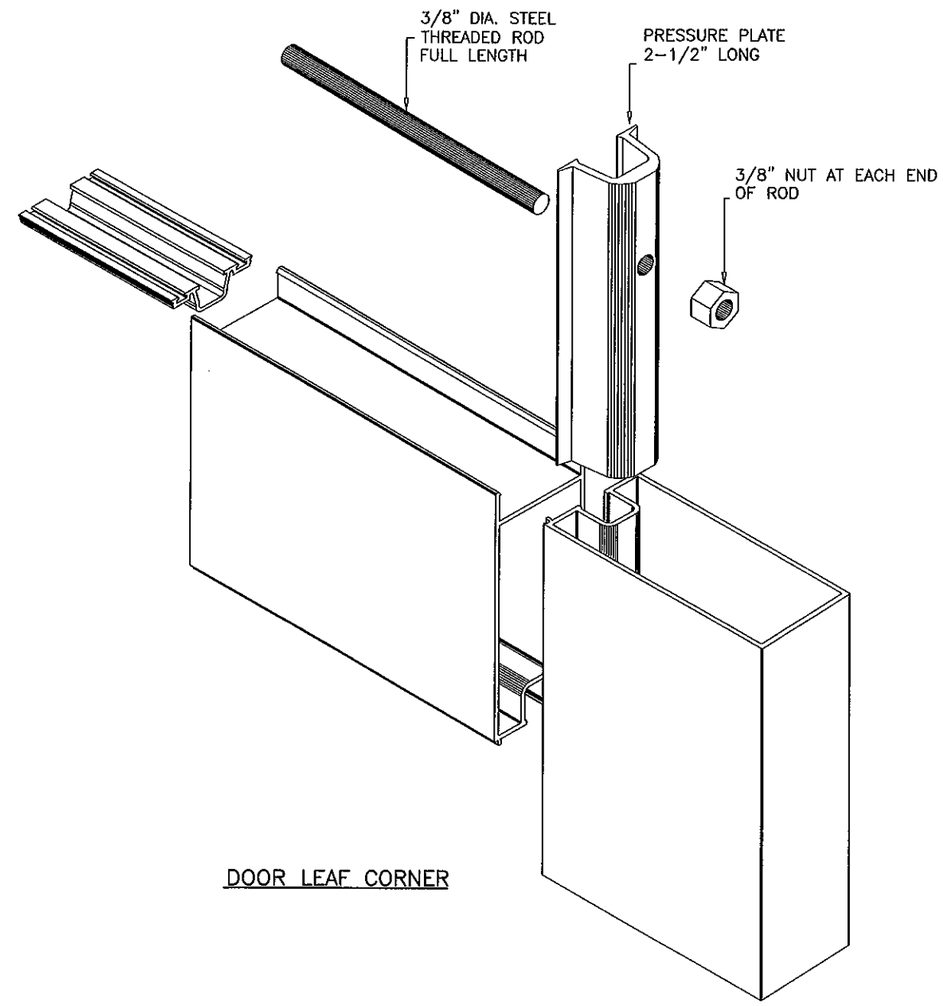

DOOR LEAF CORNER

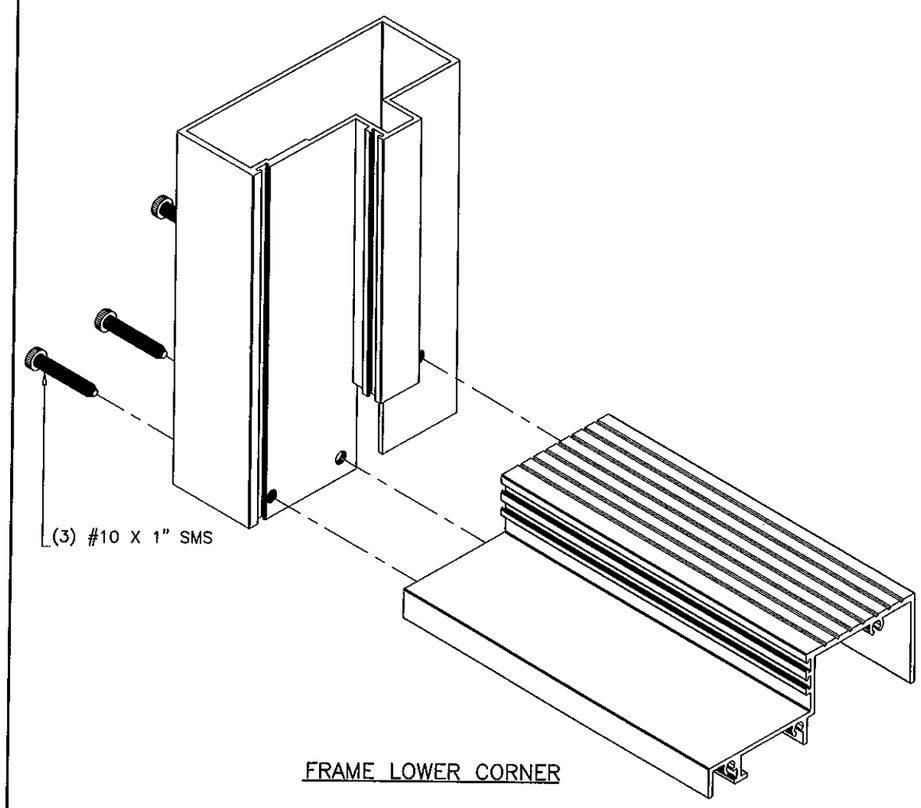

FRAME LOWER CORNER

PRODUCT REVISED
as complying with the Florida
Building Code
Acceptance No 12-0118.32
Expiration Date 7/22/16
By Ishan T. Chayla
Miami-Dade Product Control

Engr: JAVAD AHMAD
CIVIL
FLA. PE # 70592
C.A.N. 3538
MAR 20 2012

AL-FAROOQ CORPORATION
ENGINEERS & PRODUCT DEVELOPMENT
1235 S.W. 87 AVE
MIAMI, FLORIDA 33174
TEL. (305) 264-8100 FAX. (305) 262-6978

COMP-ANL\W97-18AWP

SERIES 'LA FRANCAIS' ALUM FRENCH DOOR W/ SIDELITES (N.L.)

TRULITE WINDOW & DOOR SOLUTIONS, LLC
8130 N.W. 74TH AVE.
MEDLEY, FL. 33166
TEL. (305) 887-2646 FAX (305) 883-1309

revisions:

no	date	by	description
H	02.23.09		UPDATED FOR 2007 FBC
I	05.06.10		MANUF. NAME REVISED
J	04.28.11		NO CHANGE THIS SHEET
K	12.23.11		MANUF. NAME REVISED

date: 08-05-97
scale: 3/8" = 1"
dr. by: HAMID
chk. by:

drawing no.
W97-18

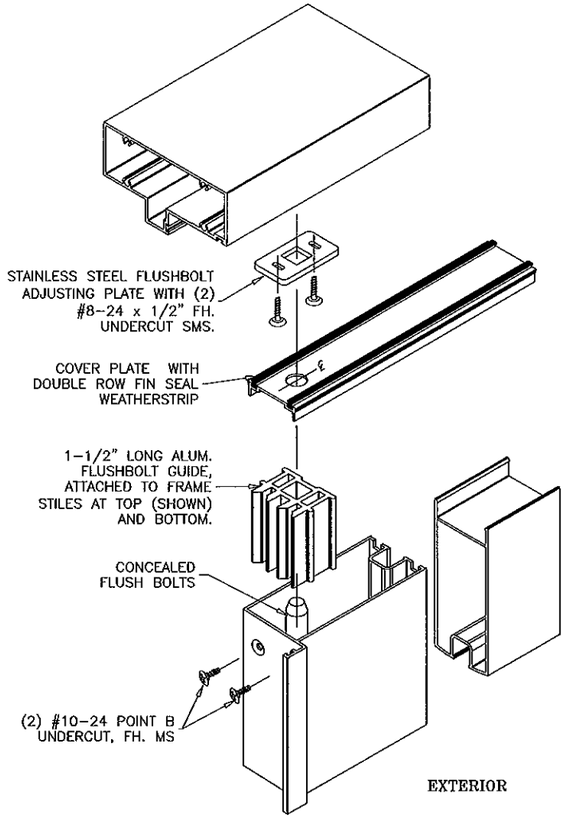

TOP FLUSHBOLT ASSEMBLY

FLUSH BOLT GUIDE
AND ADJUSTMENT PLATE

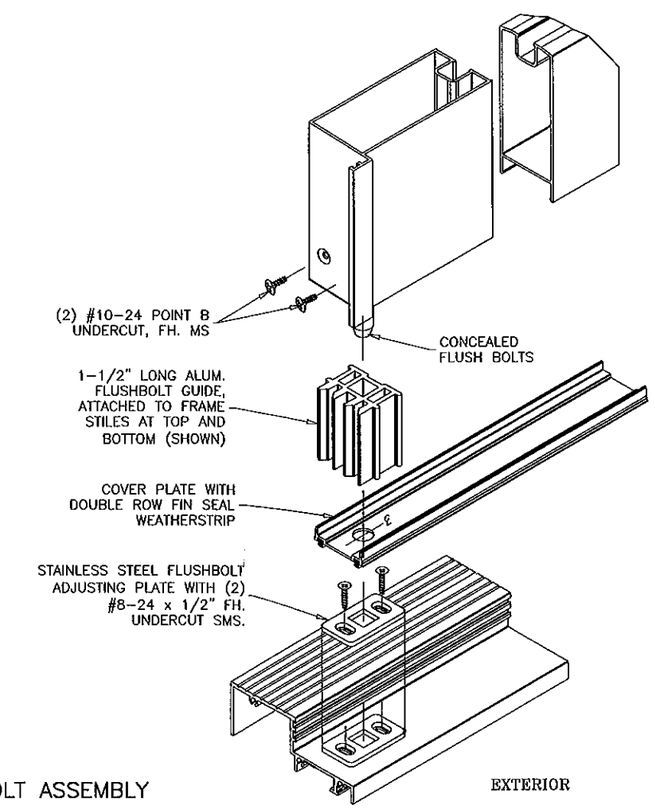

BOTTOM FLUSHBOLT ASSEMBLY

PRODUCT REVISED
as complying with the Florida
Building Code
Acceptance No 12-0118.32
Expiration Date July 22, 2016
Chief State Product Control

Engr: JAVAD AHMAD
CIVIL
FLA. PE # 70592
C.A.N. 3538

MAR 20 2012

AL-FAROOQ CORPORATION
ENGINEERS & PRODUCT DEVELOPMENT
1235 S.W. 87 AVE
MIAMI, FLORIDA 33174
TEL. (305) 264-8100 FAX. (305) 262-6978
COMP-ANL\W97-18AWP

SERIES 'LA FRANCAIS' ALUM FRENCH DOOR W/ SIDELITES (N.I.)

TRULITE WINDOW & DOOR SOLUTIONS, LLC
8130 N.W. 74TH AVE.
MEDLEY, FL. 33166
TEL. (305) 887-2646 FAX (305) 883-1309

revisions:

no	date	by	description
H	02.23.09		UPDATED FOR 2007 FBC
I	05.06.10		MANUF. NAME REVISED
J	04.28.11		REV. PER BNC COMMENTS
K	12.23.11		MANUF. NAME REVISED

date: 08-05-97
scale: 3/8" = 1"
dr. by: HAMID
chk. by:

drawing no.
W97-18

sheet 8 of 8