MIAMI-DADE COUNTY
DEPARTMENT OF PERMITTING, ENVIRONMENT, AND REGULATORY AFFAIRS (PERA)
BOARD AND CODE ADMINISTRATION DIVISION

NOTICE OF ACCEPTANCE (NOA)

MIAMI-DADE COUNTY
PRODUCT CONTROL SECTION
11805 SW 26 Street, Room 208
Miami, Florida 33175-2474
T (786) 315-2590 F (786) 315-2599
www.miamidade.gov/pera/

Stanley Access Technologies, LLC
65 Scott Swamp Road
Farmington, CT 06032

SCOPE:

This NOA is being issued under the applicable rules and regulations governing the use of construction materials. The documentation submitted has been reviewed and accepted by Miami-Dade County PERA -Product Control Section to be used in Miami Dade County and other areas where allowed by the Authority Having Jurisdiction (AHJ).

This NOA shall not be valid after the expiration date stated below. The Miami-Dade County Product Control Section (In Miami Dade County) and/or the AHJ (in areas other than Miami Dade County) reserve the right to have this product or material tested for quality assurance purposes. If this product or material fails to perform in the accepted manner, the manufacturer will incur the expense of such testing and the AHJ may immediately revoke, modify, or suspend the use of such product or material within their jurisdiction. PERA reserves the right to revoke this acceptance, if it is determined by Miami-Dade County Product Control Section that this product or material fails to meet the requirements of the applicable building code.
This product is approved as described herein, and has been designed to comply with the Florida Building Code, including the High Velocity Hurricane Zone.

DESCRIPTION: Series "By Pass" Aluminum Automatic Sliding Glass Door (Sx-O-Sx) w/ Breakout & Reinforcements

APPROVAL DOCUMENT: Drawing No. **03-SAT-0585**, sheets 1 through 7 of 7, prepared by manufacturer, dated 12/15/08 and last revised on 12/29/11, signed and sealed by Frank L. Bennardo, P.E., bearing the Miami-Dade County Product Control Revision stamp with the Notice of Acceptance number and expiration date by the Miami-Dade County Product Control Section.

MISSILE IMPACT RATING: Large and Small Missile Impact Resistant

Limitations:

1. Alum reinforcement at each side of fixed panel Stiles and full length alum angle at fixed panel top & bottom rails at interior side required.
2. Max Daylight opening (DLO) height=28"X width=47-5/16"

LABELING: Each unit shall bear a permanent label with the manufacturer's name or logo, city, state and series and following statement: "Miami-Dade County Product Control Approved", unless otherwise noted herein.

RENEWAL of this NOA shall be considered after a renewal application has been filed and there has been no change in the applicable building code negatively affecting the performance of this product.

TERMINATION of this NOA will occur after the expiration date or if there has been a revision or change in the materials, use, and/or manufacture of the product or process. Misuse of this NOA as an endorsement of any product, for sales, advertising or any other purposes shall automatically terminate this NOA. Failure to comply with any section of this NOA shall be cause for termination and removal of NOA.

ADVERTISEMENT: The NOA number preceded by the words Miami-Dade County, Florida, and followed by the expiration date may be displayed in advertising literature. If any portion of the NOA is displayed, then it shall be done in its entirety.

INSPECTION: A copy of this entire NOA shall be provided to the user by the manufacturer or its distributors and shall be available for inspection at the job site at the request of the Building Official.
This NOA **revises NOA # 09-0112.01** and consists of this page 1 and evidence pages E-1, as well as approval document mentioned above.
The submitted documentation was reviewed by **Ishaq I. Chanda, P.E.**

MIAMI-DADE COUNTY APPROVED

3/28/12

NOTICE OF ACCEPTANCE: EVIDENCE SUBMITTED

A. DRAWINGS

1. Manufacturer's die drawings and sections (transferred from file # **09-0112.01**)
2. Drawing No. **03-SAT-0585**, sheets 1 through 7 of 7, prepared by manufacturer, dated 12/15/08 and last revised on 12/29/11, signed and sealed by Frank L. Bennardo, P.E.

Note: This revision consists of FBC 2010 notes only.

B. TESTS (transferred from file # 09-0112.01)

1. Test reports on: 1) Air Infiltration Test, per FBC, TAS 202-94
   2) Uniform Static Air Pressure Test, Loading per FBC TAS 202-94
   3) Water Resistance Test, per FBC, TAS 202-94 (Not performed)
   4) Large Missile Impact Test per FBC, TAS 201-94
   5) Cyclic Wind Pressure Loading per FBC, TAS 203-94
   6) Forced Entry Test, per FBC 2411 3.2.1, TAS 202-94

Along with installation diagram of "By Pass Sx-O-Sx" automatic aluminum sliding glass door w/Breakout, prepared by Fenestration Testing Laboratory Test Report No. **FTL3575 (FTL03025)** dated April 03, 2003 signed and sealed by Joseph C. Chan, P.E. revised with addendum letter dated September 16, 2003 signed and sealed by Joseph C. Chan, P.E.

C. CALCULATIONS

1. Statement letter dated 12/29/11, compliance to FBC 2010, prepared, signed & sealed by Frank L. Bennardo P. E.
2. Anchor verification & structural analysis calculations complying w/ FBC 2007, prepared by Frank L. Bennardo P. E. Inc., Consulting Engineers, dated 12-22-2008, signed and sealed by Frank L. Bennardo, P.E. (transferred from file # **09-0112.01**)
3. Glazing complies w/ ASTME-1300-02 & -04

D. QUALITY ASSURANCE

1. Miami Dade Department of Permitting, Environment, and Regulatory Affairs (PERA).

E. MATERIAL CERTIFICATIONS

1. Notice of Acceptance No. **07-1116.11** issued to Saf-Glass, LLC (Former Security Impact Glass Holding LLC), for "SAF-GLAS-Polycarbonate laminate", expiring on 12/16/12.

F. STATEMENTS

1. Statement letter of conformance 2010 and letter of no financial interest, issued by Engineering Express, dated 12/29/11, signed and sealed by Frank L. Bennardo, P.E.
2. Statement letter of anchor verification complying w/ FBC 2007, signed & sealed by Frank L. Bennardo, P.E.(transferred from file # **09-0112.01**)
3. Statement of lab compliance, as part of above test report.
4. Addendum letter dated September 16, 2003 for test report **FTL3575 (FTL03025),** issued by Fenestration testing laboratory, signed and sealed by Joseph C. Chan, P.E.(transferred from files # **09-0112.01/ # 03-0605.03**)

G. OTHER

1. This NOA **revises** NOA # **09-0112.01**, expiring on Jan 02, 2014.

Ishaq I. Chanda

Ishaq I. Chanda, P.E.
Product Control Examiner
NOA No 12-0126.02
Expiration Date: January 02, 2014
Approval Date: April 05, 2012

SERIES "BY PASS" AUTOMATIC SLIDING GLASS DOOR

LARGE MISSILE IMPACT RESISTANT

PACKAGE WIDTH INFORMATION						
PACKAGE WIDTH	CLEAR DOOR OPENING	SX PANEL WIDTH	O PANEL WIDTH	PANEL TRAVEL	MASONRY OPENING	CAULKING ALLOWANCE
14' (168")	46 1/2"	56 3/4"	56 3/4"	46 1/2"	14' 1/2" (168 1/2")	1/4" / SIDE

PACKAGE HEIGHT INFORMATION FOR SURFACE APPLICATIONS			
PACKAGE HEIGHT	MASONRY OPENING	CAULKING ALLOWANCE	ACTUAL CLEAR OPENING UNDER HEADER
7'-8" (92")	7'-8 1/4" (92 1/4")	1/4"	6"-10 1/2" (82 1/2")

DESIGN PRESSURE RATING		
	WHERE WATER INFILTRATION REQUIREMENT IS NEEDED.	WHERE WATER INFILTRATION REQUIREMENT IS NOT NEEDED
POSITIVE	NOT APPROVED	+70 PSF
NEGATIVE	NOT APPROVED	- 70 PSF

ANCHOR TYPE

IN CONCRETE (3KSI MINIMUM): 1/4" PERMASEAL TAPPER CONCRETE SCREW EMBEDDED 1-1/2" MIN, WITH 3" MINIMUM EDGE DISTANCE.
IN STEEL: 1/4-20 SMS SAE GRADE 2 OR BETTER (NOTE A36 3/16" STEEL SUBSTRATE MIN.), WITH 1/2" MINIMUM EDGE DISTANCE
IN WOOD (G=0.55 MINIMUM): #14 SHEET METAL SCREW EMBEDDED 1-1/2" MIN, WITH 3/4" MINIMUM EDGE DISTANCE

ANCHOR SPACING:

(NOTE: MINIMUM 2X4 WOOD BUCK FOR WOOD SCREWS)
SILL: QUADROUPLE ROW, 4" FROM ENDS, BALANCE 17.5" O.C. MAX
HEAD: SINGLE ROW EA MEMBER, 9" FROM ENDS, BALANCE 10" O.C. MAX.
JAMBS: SINGLE ROW EA MEMBER, 2" FROM BOTTOM END, BALANCE 10" O.C.

SYSTEM NOTES

1.) ALL ALUMINUM EXTRUSIONS ARE TO BE 6063-T6 ALUMINUM ALLOY
2.) GLAZING: 9/16 IMPACT RATED (2 PCS, 1/4" CLEAR, ANNEALED (OUTER/INNER) GLASS WITH .070" INTERLAYER LAMINATE) SUPPLIED BY SECURITY IMPACT GLASS (PER CURRENT NOA)
3.) CORNER PANEL CONSTRUCTION: PANEL CORNERS ARE BUTT JOINTED, SECURED WITH (4) FULL WIDTH 5/16" THREADED TIE RODS AT TOP RAIL, INTERMEDIATE RAIL, AND BOTTOM RAIL AT INTERNAL/EXTERNAL CORNERS ONLY. ALL JOINTS ARE ALSO WELDED.
4.) THE GLAZING MATERIAL SHALL COMPLY WITH THE REQUIREMENTS IN THE PERFORMANCE SPECIFICATIONS AND METHODS OF TEST FOR SAFETY GLAZING MATERIALS USED IN BUILDINGS.

GENERAL NOTES

1. THIS DOOR HAS BEEN TESTED & DESIGNED IN ACCORDANCE WITH THE REQUIREMENTS OF THE 2010 EDITION OF THE FLORIDA BUILDING CODE HIGH VELOCITY HURRICANE ZONE (HVHZ) AND MIAMI DADE COUNTY PROTOCOLS TAS 201 FOR LARGE MISSILE IMPACT, TAS 202 FOR UNIFORM STATIC AIR PRESSURE AND TAS 203 FOR CYCLIC WIND LOADING.
2. PERMIT HOLDER SHALL VERIFY THE ADEQUACY OF THE EXISTING STRUCTURE TO WITHSTAND ADDITIONAL IMPOSED LOADS.
WOOD BUCKS NOT BY STANLEY SHALL BE ANCHORED PROPERLY TO TRANSFER LOADS TO THE EXISTING STRUCTURE.
3. DOORS DETAILED HEREIN HAVE BEEN DESIGNED AND TESTED TO THE MAXIMUM SPANS AND LOADS SHOWN ON THESE DRAWINGS. REFERENCE FENESTRATION TEST LABS REPORT # 02-0729.01 AUTH: FTL 03025
4. ANCHORS SHALL BE INSTALLED PER MANUFACTURER'S SPECIFICATIONS, SPACED AS NOTED HEREIN. ANCHOR EMBEDMENT TO BASE MATERIAL DOES NOT INCLUDE WALL DRESSING OR STUCCO.
5. ALL BOLTS & WASHERS SHALL BE ZINC COATED, GALVANIZED OR STAINLESS STEEL WITH A MINIMUM TENSILE STRENGTH OF 60 KSI, EXCEPT INSTALLATION ANCHORS.

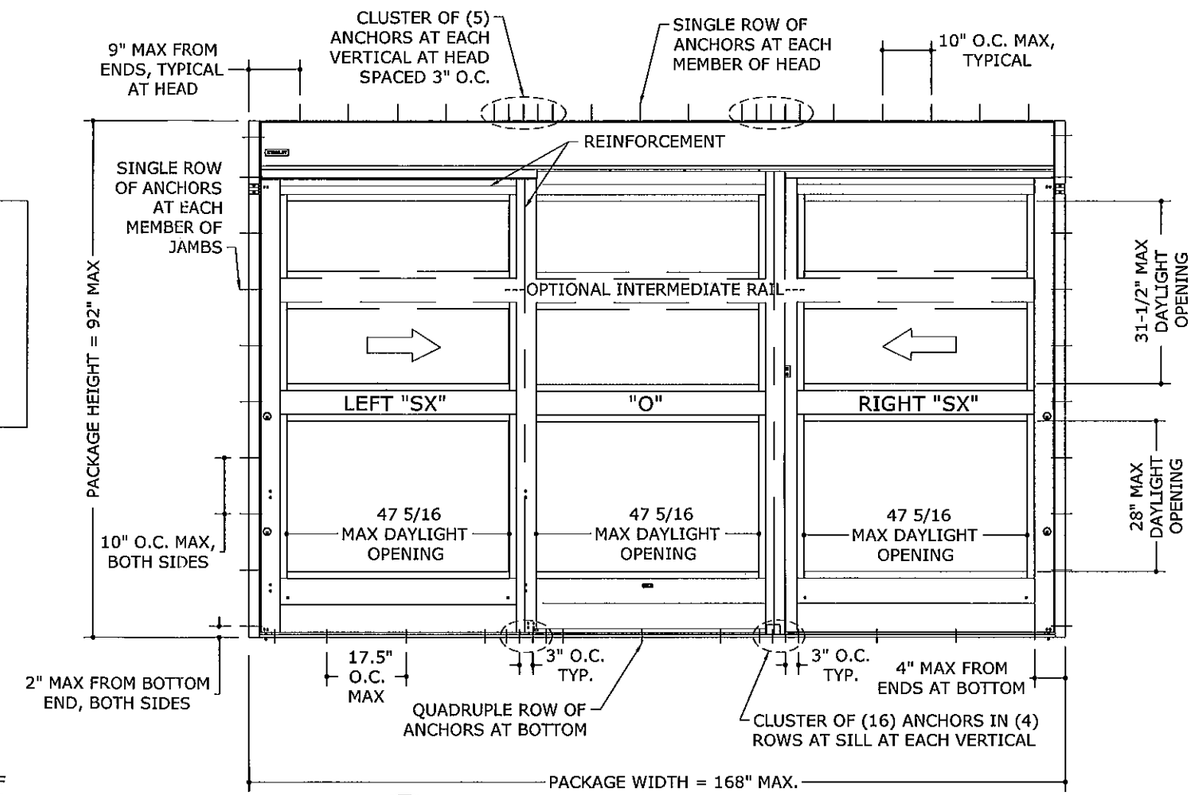

1/1 TYPICAL ELEVATION

N.T.S. EXTERIOR ELEV

PRODUCT REVISED
on complying with the Florida Building Code
Acceptance No. 12-0126.02
Expiration Date JAN 02, 2014
By Shas J. Chavda
Miami Dade Product Control

FRANK L. BENNARDO, P.E. #PE46549
LICENSED PROFESSIONAL ENGINEER No. 46549 STATE OF FLORIDA
12/29/11
ENGINEERING EXPRESS, LLC
160 SW 12th AVENUE, Suite #106
DEERFIELD BEACH, FL 33442
Ph: (954) 354-0660 Fax: (954) 354-0443
WWW.ENGEXP.COM
CERT OF AUTH #8885
A. FRANK L. BENNARDO, P.E., INC. INNOVATION

STANLEY
ACCESS TECHNOLOGIES
65 SCOTT SWAMP ROAD, FARMINGTON, CT 06032

SERIES "BY PASS" ALUMINUM AUTOMATIC SLIDING GLASS DOOR WITH BREAKOUT (LMI)
MIAMI-DADE NOTICE OF ACCEPTANCE

REMARKS	DRWN	CHKD	DATE
INIT ISSUE	KL	CL	12/15/08
2010 FBC	KL	FLB	12/29/11

03-SAT-0585
SCALE: - 04
PAGE DESCRIPTION:
-
-

7

1

F:\01 Project Files\Stanley (SAT)\2003\03-SAT-0585_04a By Pass Auto SGD with Breakout (NOA).DWG
keithl
12/29/2011 - 4:57pm

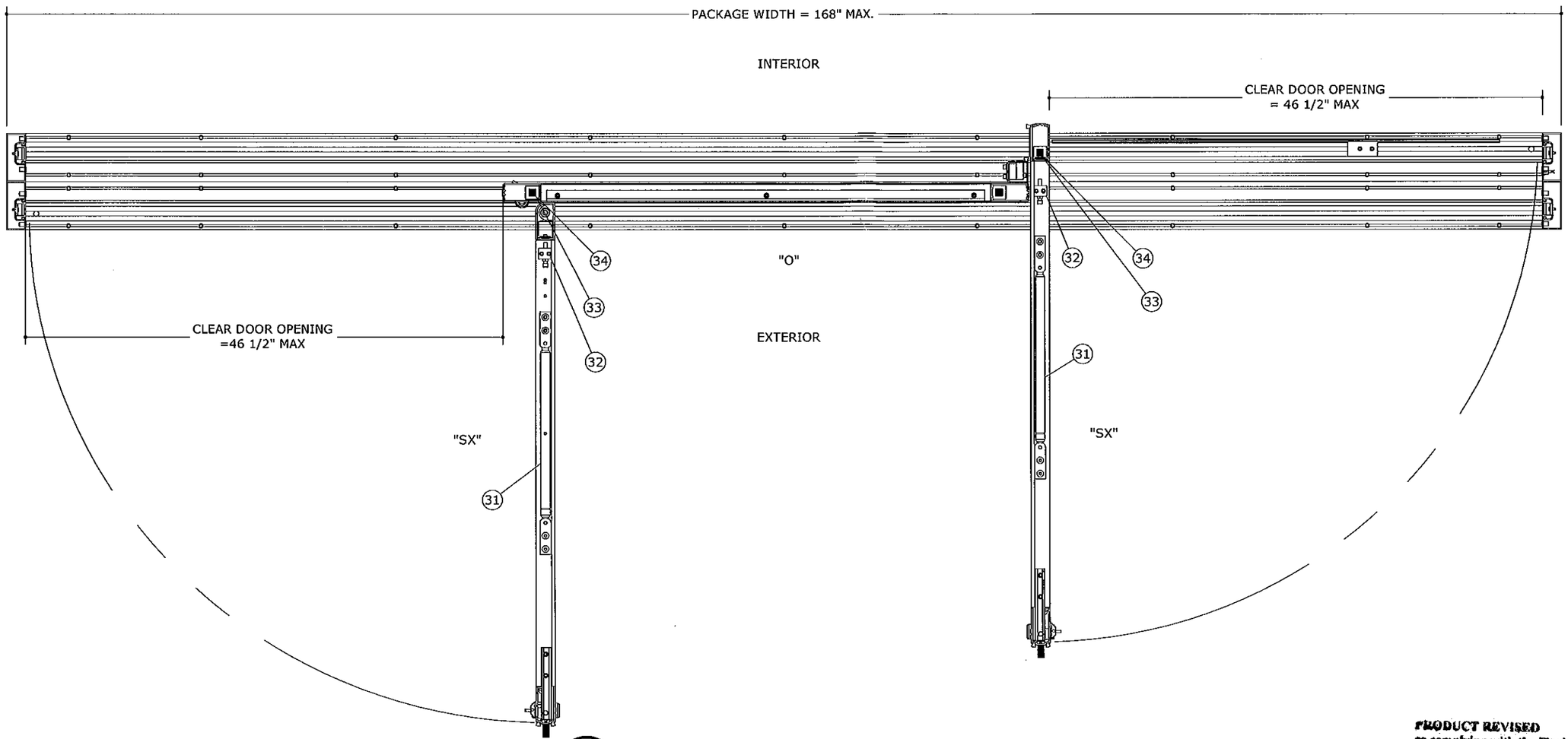

1/2 EMERGENCY BREAKOUT
N.T.S. PLAN VIEW

PRODUCT REVISED
as complying with the Florida
Building Code
Acceptance No. 12-0126.02
Expiration Date 1/2/14
By Ishaq I. Chaya
Miami Dade Product Control

FRANK L. BENNARDO, P.E.
#RE0046549
LICENSE
No. 46549
STATE OF FLORIDA
PROFESSIONAL ENGINEER
12/29/2011

ENGINEERING EXPRESS®
160 SW 12th AVENUE, #506
DEERFIELD BEACH, FL 33442
PH: (954) 354-0660 FAX: (954) 354-0445
WWW.ENGEXP.COM
CERT OF AUTH #8885
A FRANK L. BENNARDO, P.E., INC. INNOVATION

STANLEY
ACCESS TECHNOLOGIES
65 SCOTT SWAMP ROAD, FARMINGTON, CT 06032

SERIES "BY PASS" ALUMINUM AUTOMATIC
SLIDING GLASS DOOR WITH BREAKOUT (LMI)
MIAMI-DADE NOTICE OF ACCEPTANCE

REMARKS	DRWN	CHKD	DATE
INIT ISSUE	KL	CL	12/15/08
2010 FBC	KL	FLB	12/29/11

03-SAT-0585
SCALE: - 04
PAGE DESCRIPTION:
-
-

7

2

F:\01 Project Files\Stanley (SAT)\2003\03-SAT-0585 By Pass Auto SGD with Breakout (NOA)\03-SAT-0585_04a By Pass Auto SGD with Breakout (NOA).DWG
12/29/2011 - 4:57pm keithl

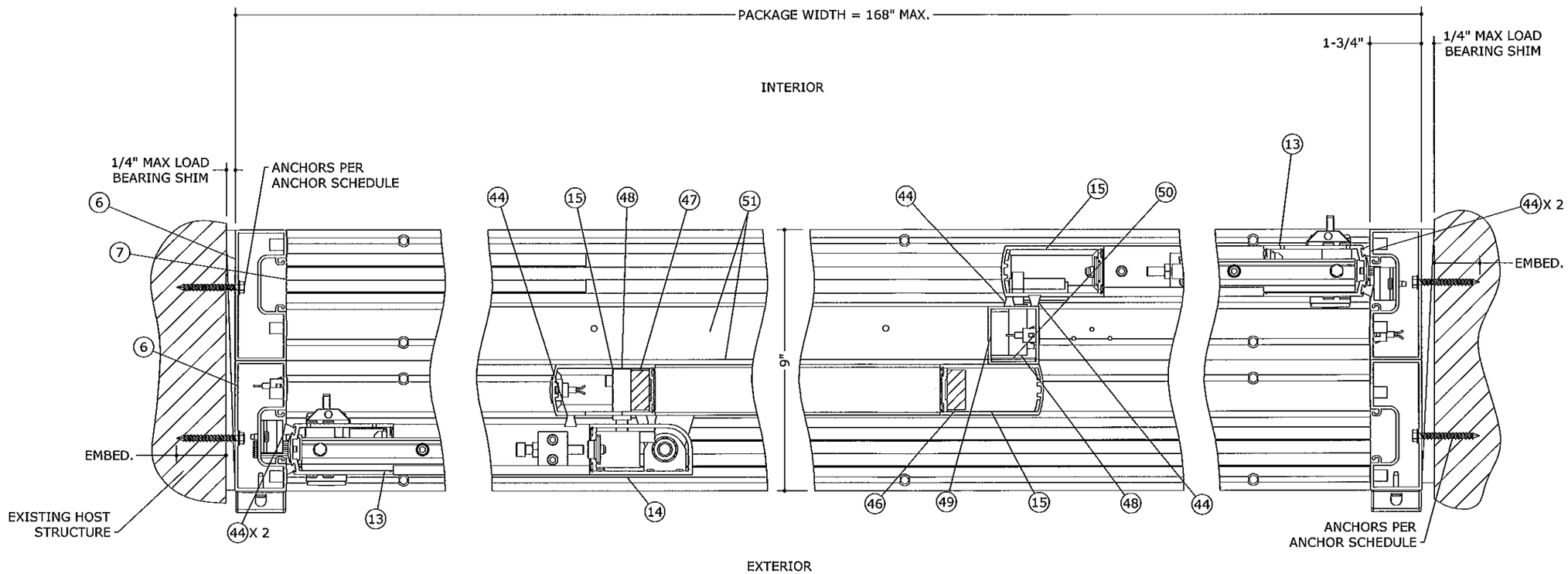

1/3 TYPICAL SECTION

N.T.S. HORIZ SECTION

PRODUCT REVISED
as complying with the Florida
Building Code
Acceptance No 12-0126.02
Expiration Date 1/2/14
By Ishwaj I. Chandra
Miami Dade Product Control

FRANK L. BENNARDO, P.E.
#PE0046949
LICENSE
No 12629/2011
STATE OF FLORIDA
PROFESSIONAL ENGINEER

ENGINEERING EXPRESS
160 SW 12th AVENUE, #106
DEERFIELD BEACH, FL 33442
PH: (954) 354-0660 FAX: (954) 354-0449
WWW.ENGEXP.COM
CERT OF AUTH #9885
A FRANK L. BENNARDO, P.E., INC. INNOVATION

STANLEY
ACCESS TECHNOLOGIES
65 SCOTT SWAMP ROAD, FARMINGTON, CT 06032

SERIES "BY PASS" ALUMINUM AUTOMATIC
SLIDING GLASS DOOR WITH BREAKOUT (LMI)
MIAMI-DADE NOTICE OF ACCEPTANCE

REMARKS	DRWN	CHKD	DATE
INIT ISSUE	KL	CL	12/15/08
2010 FBC	KL	FLB	12/29/11

03-SAT-0585
SCALE: - 04
PAGE DESCRIPTION:
-
-

7

3

F:\01 Project Files\Stanley (SAT)\2003\03-SAT-0585 By Pass Auto SGD with Breakout (NOA)\03-SAT-0585_04a By Pass Auto SGD with Breakout (NOA).DWG
keithl
12/29/2011 - 4:57pm

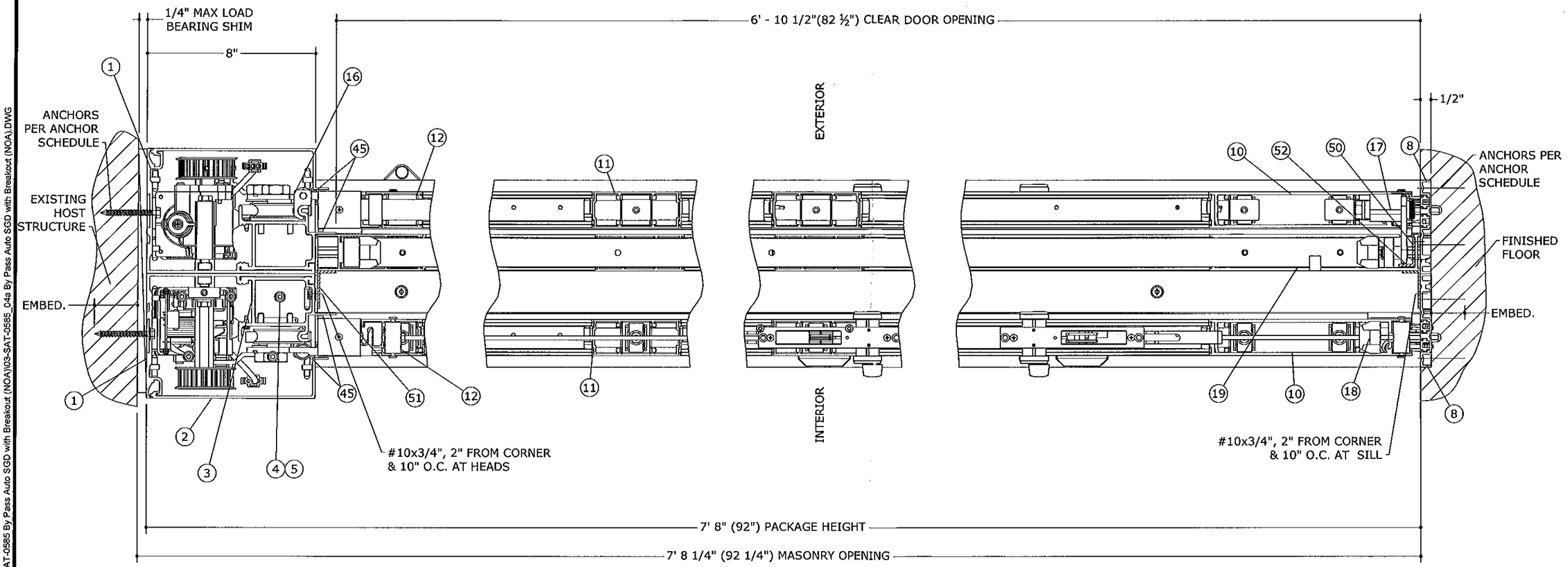

1/4 VERTICAL SECTION

N.T.S. VERT SECTION

PRODUCT REVISED
as complying with the Florida
Building Code
Acceptance No. 12-0126.02
Expiration Date 1/2/14
By Ishaq J. Ghani
Miami Dade Product Control

FRANK L. BENNARDO, P.E.
PE0046549
LICENSE
NO. 46549
12/29/2011
STATE OF FLORIDA
PROFESSIONAL ENGINEER

ENGINEERING EXPRESS
160 SW 12th AVENUE, #206
DEERFIELD BEACH, FL 33442
PH: (954) 354-0660 FAX: (954) 354-0446
WWW.ENGEXP.COM
CERT OF AUTH #8885
A FRANK L. BENNARDO, P.E., INC. INNOVATION

STANLEY
ACCESS TECHNOLOGIES
65 SCOTT SWAMP ROAD, FARMINGTON, CT 06032

SERIES "BY PASS" ALUMINUM AUTOMATIC
SLIDING GLASS DOOR WITH BREAKOUT (LMI)
MIAMI-DADE NOTICE OF ACCEPTANCE

REMARKS	DRWN	CHKD	DATE
INIT ISSUE	KL	CL	12/15/08
2010 FBC	KL	FLB	12/29/11

03-SAT-0585
SCALE: - 04
PAGE DESCRIPTION:

7

4

12/29/2011 - 4:57pm keithl F:\01 Project Files\Stanley (SAT)\2003\03-SAT-0585 By Pass Auto SGD with Breakout (NOA)\03-SAT-0585_04a By Pass Auto SGD with Breakout (NOA).DWG

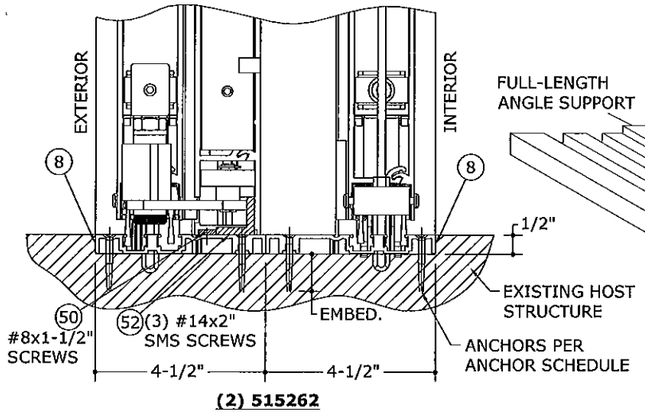

(2) 515262

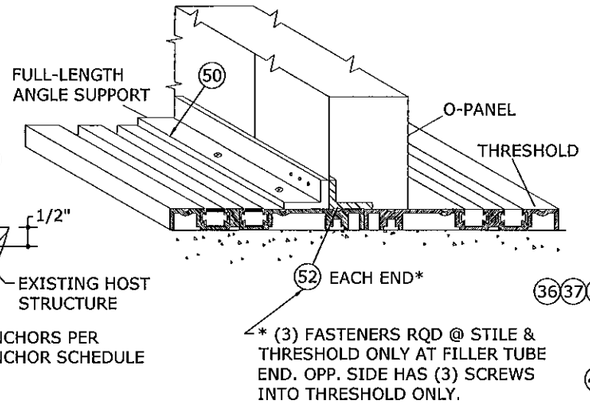

5/5 TYP. O-PANEL CONN.
N.T.S. ISOMETRIC

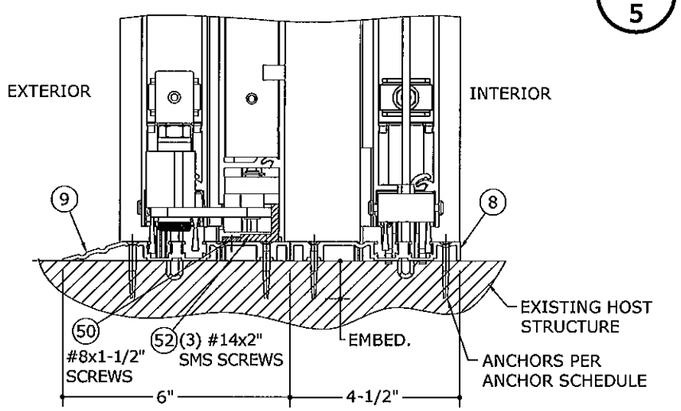

516339 & 515262

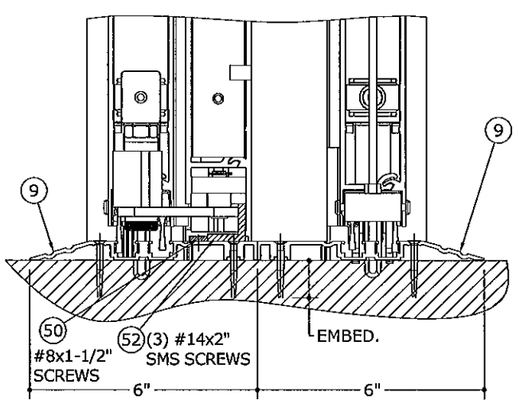

(2) 516339

1/5 THRESHOLD OPTIONS
N.T.S. VERT SECTIONS

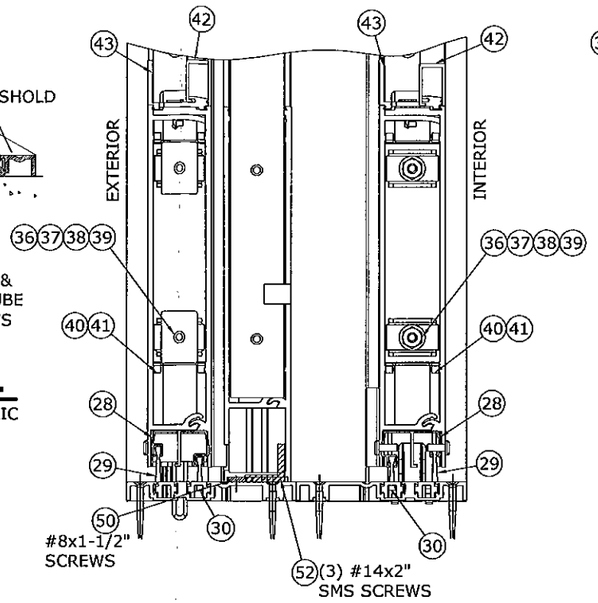

2/5 RAIL ASSEMBLY DETAIL - TIE RODS, CLIPS, BRUSHES & HARDWARE
N.T.S. VERT SECTION

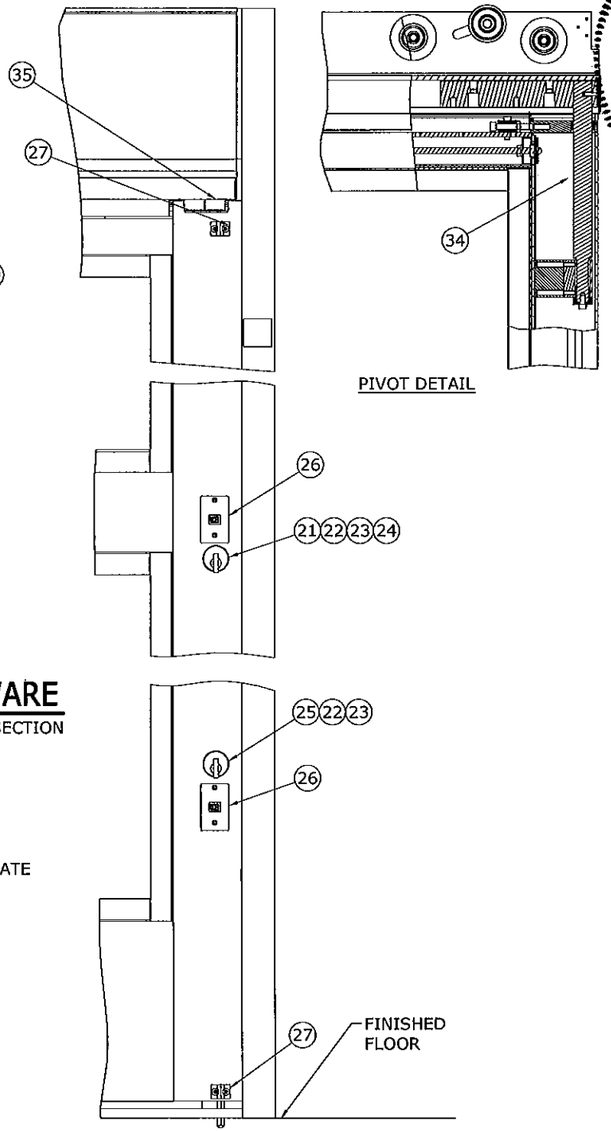

PIVOT DETAIL

4/5 LOCK & FLUSH BOLT DETAIL AT BOTH SX PANELS
N.T.S. INTERIOR ELEV

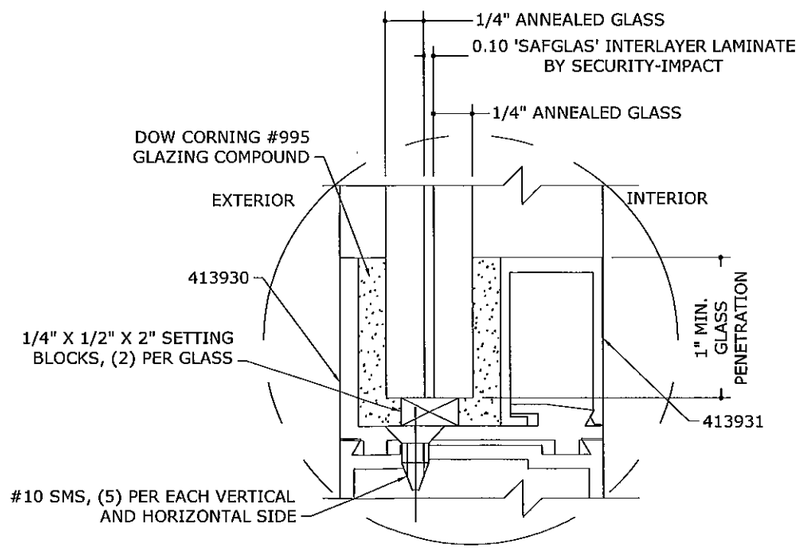

3/5 GLAZING DETAIL
N.T.S. VERT SECTION

PRODUCT REVISED
as complying with the Florida Building Code
Acceptance No. 12-0126.02
Expiration Date 1/2/14
By Ishaq J. Chaudhary
Miami Dade Product Control

FRANK L. BENNARDO, P.E.
PE0046549
LICENSE
No. 46549
12/29/2011
STATE OF FLORIDA
PROFESSIONAL ENGINEER

ENGINEERING EXPRESS
160 SW 12th AVENUE, #105
DEERFIELD BEACH, FL 33442
PH: (954) 354-0660 FAX: (954) 354-0623
WWW.ENGEXP.COM
CERT OF AUTH #9885
A FRANK L. BENNARDO, P.E., INC. INNOVATIONS

STANLEY
ACCESS TECHNOLOGIES
65 SCOTT SWAMP ROAD, FARMINGTON, CT 06032

SERIES "BY PASS" ALUMINUM AUTOMATIC SLIDING GLASS DOOR WITH BREAKOUT (LMI)
MIAMI-DADE NOTICE OF ACCEPTANCE

REMARKS	DRWN	CHKD	DATE
INIT ISSUE	KL	CL	12/15/08
2010 FBC	KL	FLB	12/29/11

03-SAT-0585
SCALE: - 04
PAGE DESCRIPTION:
-
-
7
5

F:\01 Project Files\Stanley (SAT)\2003\03-SAT-0585 By Pass Auto SGD with Breakout (NOA)\03-SAT-0585_04a By Pass Auto SGD with Breakout (NOA).DWG
12/29/2011 - 4:57pm keithl

BILL OF MATERIALS

ITEM	QTY	PART NUMBER	DESCRIPTION
		313930	BYPASS - DURA STORM SYSTEM
1	2	110755	HEADER - 8.000 X 6.000 X .140
2	2	515686	HEADER COVER - 8.468 X 1.968 X .109
3	2	515056	HEADER TRACK TUBE - 4.624 X 3.110 X .125
4	2	413859	FOAM BLOCK - RH
5	2	413869	FOAM BLOCK - LH
6	4	412858	JAMB - 4.500 X 1.750 X .100
7	4	412860	JAMB INSERT
8	1	515262	THRESHOLD
9	1	516339	THRESHOLD
			PANEL ASSY - LEFT
10	1	111434	RAIL BOTTOM - 9.625 X 1.735 X .140
11	1	412940	MUNTIN - 4.250 X 1.735 X .093
12	1	413840	RAIL TOP - 2.875 X 1.735 X .093
13	1	413715	STILE LEAD - 3.531 X 1.750 X .125
14	1	413796	STILE PIVOT - 3.531 X 1.750 X .125
16	1	515031	HANGER ASSY
17	1	516704	BOTTOM STRUT
			PANEL ASSY - RIGHT
10	1	111434	RAIL BOTTOM - 9.625 X 1.735 X .140
11	1	412940	MUNTIN - 4.250 X 1.735 X .093
12	1	412840	RAIL TOP - 2.875 X 1.735 X .093
13	1	413795	STILE LEAD - 3.531 X 1.750 X .125
15	1	412944	STILE PIVOT - 3.531 X 1.750 X .125
16	1	515031	HANGER ASSY
18	1	515265	GUIDE ASSY

ITEM	QTY	PART NUMBER	DESCRIPTION
			PANEL ASSY - 'O' (FIXED)
19	1	111435	RAIL BOTTOM - 10.000 X 1.735 X .140
11	1	412940	MUNTIN - 4.250 X 1.735 X .093
20	1	412606	RAIL TOP - 2.875 X 1.735 X .093
15	1	412944	STILE LEAD - 3.531 X 1.750 X .125
15	1	412944	STILE TRAIL - 3.531 X 1.750 X .125
			COMMON COMPONENTS - SX PANELS
21	2	515258	LOCK 4 PLY STEEL (2 PT) ADAMS RITE MS1853A-390-11 1/8
22	2	706668	LOCK - CYLINDER
23	2	709221	LOCK - THUMBTURN
24	2	413811	ROD ASSEMBLY - THROWBOLT
25	2	413821	FLUSH BOLT - ADAMS RITE 41-0444-03
26	4	413162	EXIT INDICATOR
27	4	516711	FLUSH BOLT GUIDE
		312008960	SCREW - FHM-PH, #8-32 X 5/8 LG
28	2	413805-6	SWEEP HOLDER
29	2	713241	THERM-L-BRUSH
30	2	710739	THERM-L-BRUSH
31	2	413830	DAMPER ASSEMBLY
32	2	412571	BLOCK - ANCHOR
		380901499	NUT HEX JAM, 5/16-18
		353367000	SCREW - SHC-SK, 5/16-18 X 2.0 LG
		353349000	SCREW - SHM-SK, 1/4-20 X 1.0 LG
33		412572	SPACER - PILLOW BLOCK
		312073499	SCREW - FHM-PH, 1/4-20 X 2.0 LG
35		516699	DETENT - DOOR PORTION
		351801499	SCREW - SHC-SK 1/4-20 X 3/8 LG
34		515700	PIVOT ASSY - SX

ITEM	QTY	PART NUMBER	DESCRIPTION
			COMMON COMPONENTS - ALL PANELS
36		711475	WASHER - TIE ROD
37		711474	NUT - TIE ROD
38		711483	TIE ROD - 5/16-18UNC-1A, STEEL, LENGTH OF RAIL
39		706233	NUT - FLANGED
40		516338	CLIP - GUIDE
41		412479	CLIP - GUIDE
42		413931	GLASS STOP - IMPACT 1.125 X .669
43		413930	GLASS STOP GUTTER - IMPACT 1.219 X 1.735
44		411624	PILE - ADHESIVE BACKED
		413857	FOAM BLOCK
		413858	FOAM BLOCK
		413856	FOAM BLOCK
		710240	PLUG - SNAP-IN
45		411628	PILE - ADHESIVE BACKED
46	1	516809	BAR-REINFORCEMENT-TRAIL STILE
47	1	516808	BAR REINFORCEMENT - LEAD STILE
48	2	713914	LATCH - DRAW (INTERLOCK)
49	1	713920	TUBE - FILLER 2.000 X 1.75 X 0.90
50	1	711739	STRIP - KEY - 1.500 X 0.125
51	2	516810	ANGLE SUPPORT-2.000 X 1.000 X 0.180
52	2	413929	STILE BRACE-1.000 X 1.000 X 0.188 X 2.250

PRODUCT REVISED
as complying with the Florida
Building Code
Acceptance No. 12-0126.02
Expiration Date 1/2/14
By [signature]
Miami Dade Product Control

FRANK L. BENNARDO
FRANK L. BENNARDO
LICENSE
No. 46549
12/29/2011
STATE OF FLORIDA
PROFESSIONAL ENGINEER

ENGINEERING EXPRESS®
160 SW 12th AVENUE, # 106
DEERFIELD BEACH, FL 33442
Ph: (954) 354-0660 Fax: (954) 354-0665
WWW.ENGEXP.COM
CERT OF AUTH #8685
A. FRANK L. BENNARDO, P.E., INC. INNOVATION

STANLEY
ACCESS TECHNOLOGIES
65 SCOTT SWAMP ROAD, FARMINGTON, CT 06032

SERIES "BY PASS" ALUMINUM AUTOMATIC
SLIDING GLASS DOOR WITH BREAKOUT (LMI)
MIAMI-DADE NOTICE OF ACCEPTANCE

REMARKS	DRWN	CHKD	DATE
INIT ISSUE	KL	CL	12/15/08
2010 FBC	KL	FLB	12/29/11

03-SAT-0585
SCALE: - 04
PAGE DESCRIPTION:
-
-

7

6

12/29/2011 - 4:57pm keithl F:\01 Project Files\Stanley (SAT)\2003\03-SAT-0585 By Pass Auto SGD with Breakout (NOA)\03-SAT-0585_04a By Pass Auto SGD with Breakout (NOA).DWG

EXTRUSIONS 6063-T6, U.O.N.

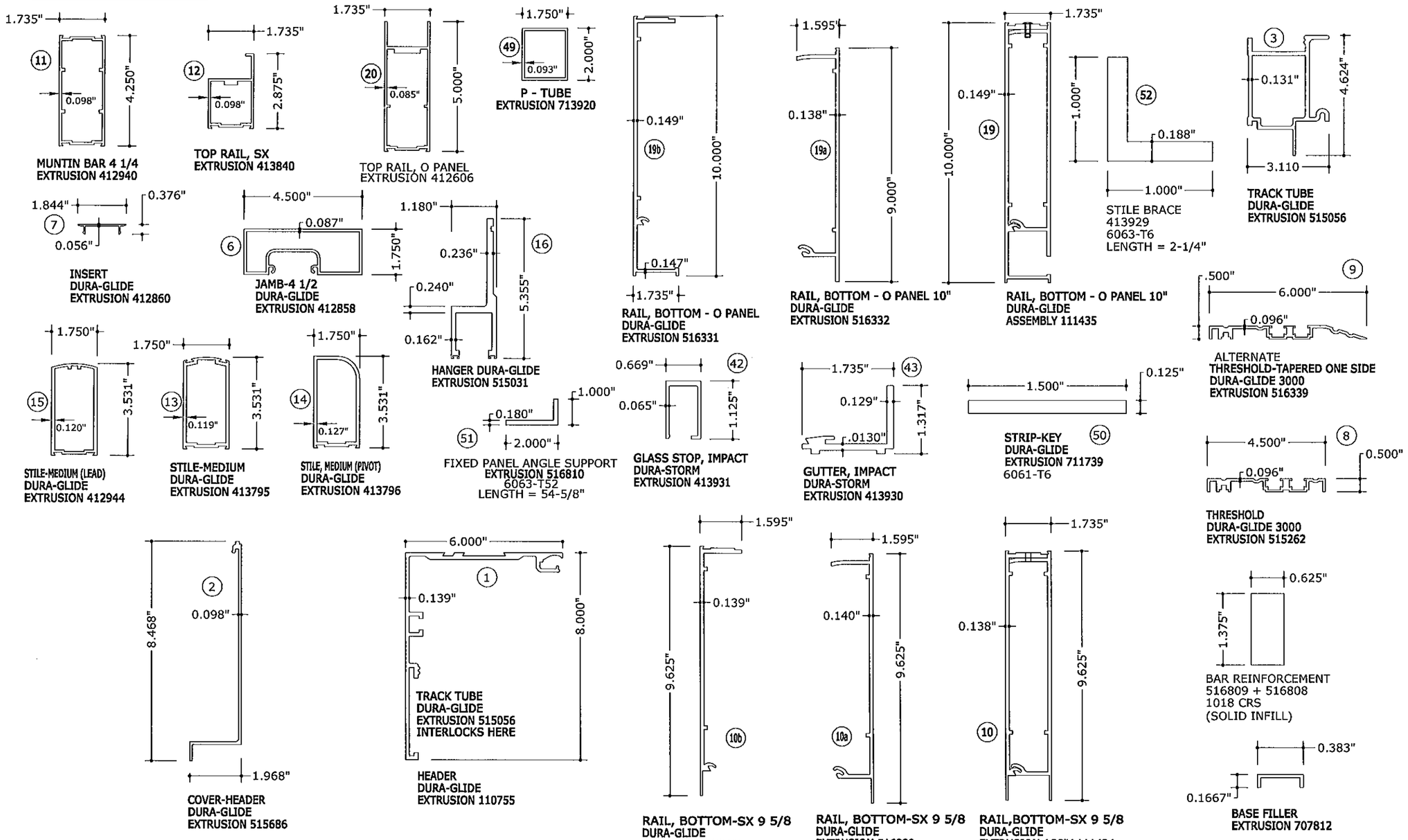

PRODUCT REVISED
as complying with the Florida
Building Code
Acceptance No 12-0126.02
Expiration Date JAN 02, 2014
By Khaq J. Chaudhary
Miami Dade Product Control

FRANK L. BENNARDO, P.E.
PE0046849
LICENSE
No. 46849
STATE OF FLORIDA
PROFESSIONAL ENGINEER
12/29/2011

ENGINEERING EXPRESS
160 SW 12th AVENUE, #1065
DEERFIELD BEACH, FL 33442
PH: (954) 354-0660 FAX: (954) 354-0442
WWW.ENGEXP.COM
CERT OF AUTH #9885
A FRANK L. BENNARDO, P.E., INC. INNOVATION

STANLEY
ACCESS TECHNOLOGIES
65 SCOTT SWAMP ROAD, FARMINGTON, CT 06032

SERIES "BY PASS" ALUMINUM AUTOMATIC
SLIDING GLASS DOOR WITH BREAKOUT (LMI)
MIAMI-DADE NOTICE OF ACCEPTANCE

REMARKS	DRWN	CHKD	DATE
INIT ISSUE	KL	CL	12/15/08
2010 FBC	KL	FLB	12/29/11

03-SAT-0585
SCALE: - 04
PAGE DESCRIPTION:
-
-

7

F:\01 Project Files\Stanley (SAT)\2003\03-SAT-0585 By Pass Auto SGD with Breakout (NOA)\03-SAT-0585_04a By Pass Auto SGD with Breakout (NOA).DWG
12/29/2011 - 4:57pm keithl