MIAMI-DADE COUNTY
DEPARTMENT OF PERMITTING, ENVIRONMENT, AND REGULATORY AFFAIRS (PERA)
BOARD AND CODE ADMINISTRATION DIVISION

MIAMI–DADE COUNTY, FLORIDA
PRODUCT CONTROL SECTION
11805 SW 26 Street, Room 208
Miami, Florida 33175–2474
T (786) 315–2590 F (786) 315–2599
www.miamidade.gov/pera/

NOTICE OF ACCEPTANCE (NOA)

Lawson Industries, Inc.
8501 NW 90th Street
Medley, FL 33166

SCOPE:

This NOA is being issued under the applicable rules and regulations governing the use of construction materials. The documentation submitted has been reviewed and accepted by Miami–Dade County PERA–Product Control Section to be used in Miami–Dade County and other areas where allowed by the Authority Having Jurisdiction (AHJ).

This NOA shall not be valid after the expiration date stated below. The Miami–Dade County Product Control Section (In Miami–Dade County) and/or the AHJ (in areas other than Miami–Dade County) reserve the right to have this product or material tested for quality assurance purposes. If this product or material fails to perform in the accepted manner, the manufacturer will incur the expense of such testing and the AHJ may immediately revoke, modify, or suspend the use of such product or material within their jurisdiction. PERA reserves the right to revoke this acceptance, if it is determined by Miami–Dade County Product Control Section that this product or material fails to meet the requirements of the applicable building code.

This product is approved as described herein, and has been designed to comply with the Florida Building Code, including the High Velocity Hurricane Zone.

DESCRIPTION: Series "SDG–9000" Aluminum Sliding Glass Door w/ Heavy Reinforcement – N. I.

APPROVAL DOCUMENT: Drawing No. **L9000–0903,** titled "Series SGD–9000 Aluminum Sliding Glass Door (NI)", sheets 1 through 8 of 8, prepared by manufacture, dated 04/23/99, with the latest revision "**A**", dated 03/30/12, signed and sealed by Thomas J. Soto, P. E., bearing the Miami–Dade County Product Control Renewal stamp with the Notice of Acceptance number and Expiration date by the Miami–Dade County Product Control Section.

MISSILE IMPACT RATING: None.

LABELING: Each unit shall bear a permanent label with the manufacturer's name or logo, city, state, model/ series and following statement: "Miami–Dade County Product Control Approved" unless otherwise noted herein.

REVISION of this NOA shall be considered after a renewal application has been filed and there has been no change in the applicable building code negatively affecting the performance of this product.

TERMINATION of this NOA will occur after the expiration date or if there has been a revision or change in the materials, use, and/or manufacture of the product or process. Misuse of this NOA as an endorsement of any product, for sales, advertising or any other purposes shall automatically terminate this NOA. Failure to comply with any section of this NOA shall be cause for termination and removal of NOA.

ADVERTISEMENT: The NOA number preceded by the words Miami–Dade County, Florida, and followed by the expiration date may be displayed in advertising literature. If any portion of the NOA is displayed, then it shall be done in its entirety.

INSPECTION: A copy of this entire NOA shall be provided to the user by the manufacturer or its distributors and shall be available for inspection at the job site at the request of the Building Official.

This NOA **renews NOA No. 09–0706.08** and consists of this page 1, evidence pages E–1 and E–2, as well as approval document mentioned above.

The submitted documentation was reviewed by **Jaime D. Gascon, P. E.**

MIAMI-DADE COUNTY APPROVED

J. Gascon
4/5/12

NOTICE OF ACCEPTANCE: EVIDENCE SUBMITTED

A. DRAWINGS

1. Manufacturer's die drawings and sections.
   (Submitted under previous NOA's No.'s 99–0517.02 and 09–0706.08)
2. Drawing No. **L9000–0903,** titled "Series SGD–9000 Aluminum Sliding Glass Door (NI)", sheets 1 through 8 of 8, prepared by manufacture, dated 04/23/99, with the latest revision "**A**", dated 03/30/12, signed and sealed by Thomas J. Soto, P. E.

B. TESTS

1. Test reports on: 1) Uniform Static Air Pressure Test, Loading per FBC TAS 202–94 along with marked–up drawings and installation diagram of an Aluminum Sliding Glass Door, prepared by Hurricane Engineering & Testing, Inc., Test Reports No.'s **HETI–09–2544** and **HETI–09–2511**, dated 05/21/09, both signed and sealed by Candido F. Font, P. E.
   (Submitted under previous NOA No. 09–0706.08)
2. Test reports on: 1) Air Infiltration Test, per SFBC, PA 202–94
   2) Uniform Static Air Pressure Test, Loading per SFBC PA 202–94
   3) Water Resistance Test, per SFBC, PA 202–94
   4) Forced Entry Test, Type "C" sliding door, Grade 10, per SFBC 2411.3.2.1, PA 202–94 and per ASTM F 842–94

   along with marked–up drawings and installation diagram of an Aluminum Sliding Glass Door, prepared by Fenestration Testing Laboratory, Inc., Test Reports No.'s **FTL–2030**, **FTL–2029**, **FTL–2028** and **FTL–2027**, dated 01/04/99, all signed and sealed by Gilbert Diamond, P. E.
   (Submitted under previous NOA No. 99–0517.02)

C. CALCULATIONS

1. Anchor verification calculations and structural analysis, complying with FBC–2007, prepared by Lawson Industries, Inc., dated 11/06/09, signed and sealed by Thomas J. Soto, P. E.
   (Submitted under previous NOA No. 09–0706.08)
2. Statement letter of conformance and compliance with the **FBC–2010** and with the AAMA 101/ I.S.2–97, dated 01/25/12, signed and sealed by Thomas J. Sotos, P. E.
3. **Glazing complies with ASTM E1300–98/ 04**

D. QUALITY ASSURANCE

1. Miami–Dade Department of Permitting, Environment, and Regulatory Affairs (PERA).

Jaime D. Gascon, P. E.
Product Control Section Supervisor
NOA No. 12–0127.05
Expiration Date: August 26, 2017
Approval Date: April 12, 2012

NOTICE OF ACCEPTANCE: EVIDENCE SUBMITTED

E. MATERIAL CERTIFICATIONS

1. None.

F. STATEMENTS

1. Statement letter of conformance, no financial interest and compliance with the **FBC–2010** and with the AAMA 101/ I.S.2–97, dated 01/25/12, signed and sealed by Thomas J. Sotos, P. E.
2. Statement letter of conformance, dated June 10, 2009, signed and sealed by Thomas J. Soto, P. E.
   (Submitted under previous NOA No. 09–0706.08)
3. Statement letter of no financial interest, dated June 22, 2009, signed and sealed by Thomas J. Soto, P. E.
   (Submitted under previous NOA No. 09–0706.08)
4. Laboratory compliance letters for Test Reports No.'s **HETI–09–2544** and **HETI–09–2511**, issued by Hurricane Engineering & Testing, Inc., dated May 21, 2009, signed and sealed by Candido F. Font, P. E.
   (Submitted under previous NOA No. 09–0706.08)
5. Laboratory compliance letters for Test Reports No.'s **FTL–2030**, **FTL–2029**, **FTL–2028** and **FTL–2027**, issued by Fenestration Testing Laboratory, Inc., dated January 04, 1999, all signed and sealed by Gilbert Diamond, P. E.
   (Submitted under previous NOA No. 99–0517.02)

G. OTHERS

1. Notice of Acceptance No. **09–0706.08**, issued to Lawson Industries, Inc. for their Series "**SDG–9000 8'–0" Aluminum Sliding Glass Door w/ Heavy Reinforcement–N.I.**", approved on 11/04/09 and expiring on 08/26/12.

Jaime D. Gascon, P. E.
Product Control Section Supervisor
NOA No. 12–0127.05
Expiration Date: August 26, 2017
Approval Date: April 12, 2012

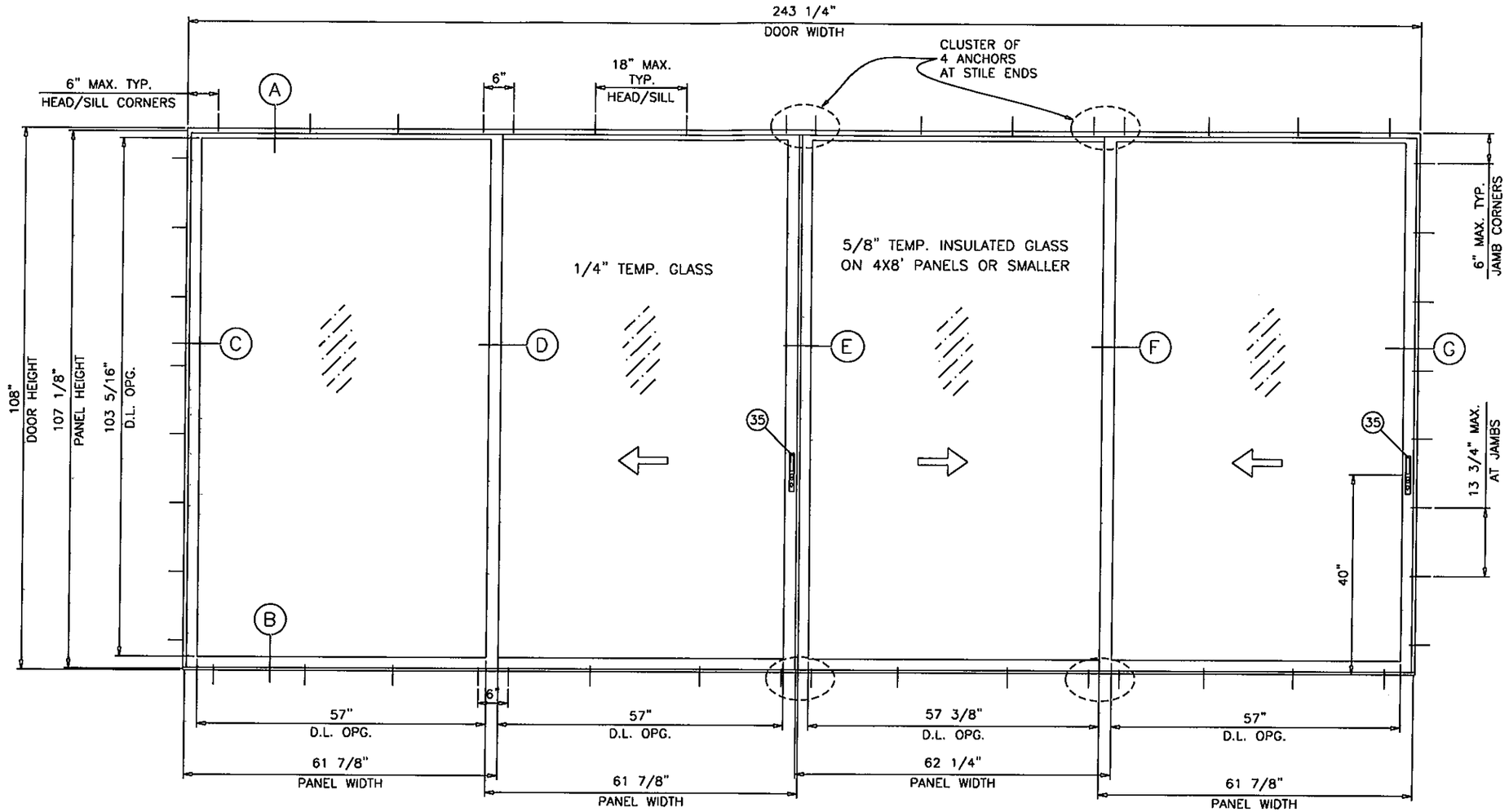

TYPICAL ELEVATION
TESTED UNIT (OXXX)

SGD-9000 ALUMINUM SLIDING GLASS DOOR

SEE SHEET 2 FOR DESIGN LOAD CAPACITY OF DESIRED PANEL SIZE.

THIS PRODUCT HAS BEEN DESIGNED AND TESTED TO COMPLY WITH THE REQUIREMENTS OF THE FLORIDA BUILDING CODE 2010 EDITION

WOOD BUCKS BY OTHERS, MUST BE ANCHORED PROPERLY TO TRANSFER LOADS TO THE STRUCTURE.

ANCHORS SHALL BE AS LISTED, SPACED AS SHOWN ON DETAILS, ANCHORS EMBEDMENT TO BASE MATERIAL SHALL BE BEYOND WALL DRESSING OR STUCCO.

ANCHORING OR LOADING CONDITIONS NOT SHOWN IN THESE DETAILS ARE NOT PART OF THIS APPROVAL.

NON-IMPACT
HEAVY REINFORCING

DOORS NOT RATED FOR IMPACT.

INSTALLATION OF THIS PRODUCT REQUIRES THE USE OF APPROVED SHUTTERS OR EXTERNAL PROTECTION DEVICES COMPLYING WITH HVHZ REQUIREMENTS.

PRODUCT RENEWED
as complying with the Florida
Building Code
Acceptance No 12-0127.05
Expiration Date 08/26/2017
By
Miami Dade Product Control

LAWSON INDUSTRIES, INC.
8501 N.W. 90 ST.
MEDLEY, FLORIDA 33166
PH No. (305) 696-8660

MANUFACTURER OF QUALITY ALUMINUM WINDOWS AND GLASS DOORS

SGD-9000 ALUMINUM SLIDING GLASS DOOR (N.I.)
HEAVY STEEL REINFORCEMENT
GENERAL NOTES AND TEST DOOR CONFIGURATION

Product Reference Number:
Drawing Number: L9000-0903
Sheet: 1 OF 8
Revision #:

Revision Notes: A. Revised to Comply w/ 2010 FBC
Drawn By: N. ERAZO
Date Drawn: 06/04/09
Revised By: N. ERAZO
Date Revised: 01/20/12
Revision Level: A
Scale:

THOMAS J. SOTOS
PROFESSIONAL ENGINEER
FL LICENSE No 55225
STATE OF FLORIDA
PROFESSIONAL ENGINEER
MAR 3 2017
DATE:

ITEM #	PART #	QUANTITY	DESCRIPTION	MATERIAL	MANF./SUPPLIER/REMARKS
1	L-9001	1	FRAME HEAD (2 TRACK)	6063-T6 ALUM.	PROFILE
2	L-9002	1	FRAME SILL (2 TRACK)	6063-T6 ALUM.	PROFILE
3	L-9003	2	FRAME JAMB (2 TRACK)	6063-T5 ALUM.	PROFILE
4	L-9004	1/ PANEL	PANEL TOP RAIL	6063-T5 ALUM.	PROFILE
5	L-9005	1/ PANEL	PANEL BOTTOM RAIL	6063-T5 ALUM.	PROFILE
6	L-9006	AS REQD.	LOCK STILE / FIXED STILE	6063-T5 ALUM.	PROFILE
7	L-9007	AS REQD.	SINGLE INTERLOCK STILE	6063-T5 ALUM.	PROFILE
8	L-9008	AS REQD.	ASTRAGAL STILE	6063-T6 ALUM.	PROFILE
9	L-9044	AS REQD.	1/4" GLAZING CHANNEL	TEAM PLASTICS Inc.	See Material Composition @ Sheet 8
10	FS-011	4/ PANEL	PANEL ASS'Y SCREW @ TOP RAIL		#10 x 5/8" P.H. - PHILLIPS
11	FS-034	2/ PANEL	PANEL ASS'Y SCREW @ BOTTOM RAIL	-	#10-24 X 1" P.H.-PHIL./ "T"
12	FS-028	8	FRAME ASSEMBLY SCREW	-	#8 X 7/16" P.H-PHIL. / SMS
13	7519-6001-7	AS REQD.	PILE WTS'P. @ JAMB/ASTRAGAL	-	(0.187"w. x 0.200"h.)-Schlegel
14	7524-6001-6	AS REQD.	PILE WTS'P. @ TOP RAILS	-	(0.187"w. x 0.250"h.)-Schlegel
15	7529-6001-7	AS REQD.	PILE WTS'P. @ BOTTOM RAILS	-	(0.187"w. x 0.300"h.)-Schlegel
16	7520-5001-7	AS REQD.	PILE WTS'P. @ INTERLOCKS	-	(0.187"w. x 0.210"h.)-Schlegel
17		AS REQD.	SILL RISER	6063-T5 ALUM.	SILICONED IN PLACE
18	L-9018	3 OR 4 *	FIXED PANEL JAMB CLIP	6063-T5 ALUM.	GW-27153
19	FS-029	1/ CLIP	FIXED PANEL CLIP SCREW	-	#8 X 5/8" PH.-PHI / SDS
20	AR-001	1	FIXED INTERLOCK ANGLE	6063-T5 ALUM.	3"x 1 1/2"x 1 9/16"x 1/8"
21	AR-002	1	MOVING INTERLOCK ANGLE/CLIP	6063-T5 ALUM.	1 1/2" X 3/4" X 2" X 1/8"
22	L-9022	1	ASTRAGAL RETAINER CLIP	6063-T6 ALUM.	AF-10798
23	AR-020	AS REQD.	REINF. @ SINGLE INTERLOCK	A36 C.R. STEEL	1/2" X 1 1/4" BAR (36 KSI)
24	AR-021	AS REQD.	REINF. @ DOUBLE INTERLOCK\ASTRAGAL	A36 C.R. STEEL	1/2" X 1 1/2" BAR (36 KSI)
25	AR-023	1	REINF. @ BOTT. RAIL	6063-T5 ALUM.	3/4" X 3/4" X .062" TUBE
26	AR-024	AS REQD.	REINF. STEEL @ INTERLOCK	A36 C.R. STEEL	1/4" X 1" BAR (36 KSI)
27	*	OPTIONAL	SCREEN JAMB ADAPTER	6063-T6 ALUM.	-
28	L-9028	1	FRAME HEAD (3 TRACK)	6063-T6 ALUM.	-
29	L-9029	1	FRAME SILL (3 TRACK)	6063-T6 ALUM.	-
30	L-9030	2	FRAME JAMB (3 TRACK)	6063-T5 ALUM.	-
31	L-9031	AS REQD.	DOUBLE INTERLOCK STILE	6063-T6 ALUM.	OPTIONAL
32	1071a	2/ PANEL	PANEL TOP GUIDE	ST801 Nylon 6-6	Molded Nylon- Rockwell M scale: 79
33	1072a	2/ PANEL	PANEL BOTTOM GUIDE	ST801 Nylon 6-6	Molded Nylon- Rockwell M scale: 79
34	HW4-WHL	2/ PANEL	PANEL SINGLE ROLLER		6 COMPONENT - ASS'Y 150
35	HC-038	AS REQ'D.	DOOR LOCK ASSEMBLY	-	INT. & EXT. PULLS, CAM, KEEPER
36	LII-109A	1/ PANEL	5/8" INSULATED PANEL TOP RAIL	6063-T6 ALUM.	PROFILE
37	LII-110A	1/ PANEL	5/8" INSULATED PANEL BOTTOM RAIL	6063-T5 ALUM.	PROFILE
38	LII-108	1/ PANEL	5/8" INSULATED PANEL LOCK STILE	6063-T6 ALUM.	PROFILE
39	LII-082	1/ PANEL	5/8" INSULATED PANEL INTERLOCK	6063-T6 ALUM.	PROFILE
40	LII-163	1/ PANEL	5/8' INSULATED PANEL ASTRAGAL	6063-T6 ALUM.	PROFILE
41	AF-10403	AS REQ'D.	POCKET DOOR JAMB HOOK	6063-T6 ALUM.	PROFILE
42	L-9045	AS REQ'D.	5/8 INSULATED GLASS GLAZING BOOT	TEAM PLASTICS Inc.	See Material Composition @ Sheet 8
43	812-25H-357	AS REQ'D.	"TruSeal" Dura Seal Swiggle Spacer	*	Black - 1/4" Air Space

* 4 ON 9/0 HIGH DOORS ONLY

DESIGN LOAD CAPACITY - PSF

PANEL WIDTH NOMINAL FT./IN.	DOOR HEIGHT FT./IN.	1/4" TEMP. GLASS							
		1-3/4" SILL		2-1/4" SILL		2-1/2" SILL		3" SILL	
		EXT. (+)	INT. (-)	EXT. (+)	INT. (-)	EXT. (+)	INT. (-)	EXT. (+)	INT. (-)
2/6	6/8	40.7	110.1	56.7	110.1	63.3	110.1	77.8	110.1
3/0		40.7	96.9	56.7	96.9	63.3	96.9	77.8	96.9
4/0		40.7	81.3	56.7	81.3	63.3	81.3	77.8	81.3
5/0		40.7	73.3	56.7	73.3	63.3	73.3	73.3	73.3
2/6	8/0	40.7	88.2	56.7	88.2	63.3	88.2	77.8	88.2
3/0		40.7	76.9	56.7	76.9	63.3	76.9	76.9	76.9
4/0		40.7	63.0	56.7	63.0	63.0	63.0	63.0	63.0
5/0		40.7	55.4	55.4	55.4	55.4	55.4	55.4	55.4
2/6	9/0	40.7	76.7	56.7	76.7	63.3	76.7	76.7	76.7
3/0		40.7	66.6	56.7	66.6	63.3	66.6	66.6	66.6
4/0		40.7	54.0	54.0	54.0	54.0	54.0	54.0	54.0
5/0		40.7	46.7	46.7	46.7	46.7	46.7	46.7	46.7

5/8" TEMP. INSULATED GLASS MAY BE USED IN 4X8' PANELS OR SMALLER.

GLASS CAPACITIES ON THIS CHART ARE BASED ON
ASTM E1300-98 (60 SEC. WIND)

THIS APPROVES DOORS USING TWO (2) OR THREE (3) TRACK FRAMES WITH ANY NUMBER OF PANELS THAT CONTAIN THE STILE CONFIGURATIONS SHOWN ON SHEETS 4 AND 6, I.E. XX, OX, XO, XXX, OXO, OXXO, AND THE FOLLOWING POCKET DOOR CONFIGURATIONS:
XXp, pXX, XXXp, pXXX, XXXXp, pXXXX, pXXXXp
OXXXp, pXXXO

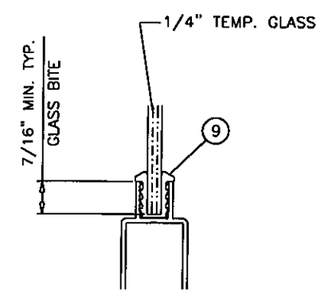

1/4 TEMP. GLAZING DETAIL

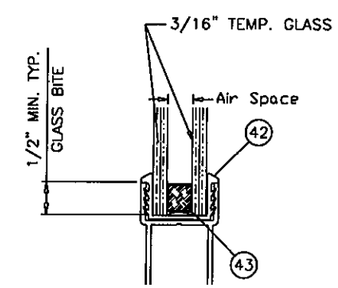

5/8 TEMP. INSULATED GLAZING DETAIL

PRODUCT RENEWED
as complying with the Florida
Building Code
Acceptance No 12-0127.05
Expiration Date 08/26/2017
By
Miami Dade Product Control

LAWSON INDUSTRIES, INC.
8501 N.W. 90 ST.
MEDLEY, FLORIDA 33166
PH No. (305) 696-8660

MANUFACTURER OF QUALITY ALUMINUM WINDOWS AND GLASS DOORS

SGD-9000 ALUMINUM SLIDING GLASS DOOR (N.I.)
HEAVY STEEL REINFORCEMENT
BILL OF MATERIALS, GLAZING DETAILS & DP LOAD CHARTS

Product Reference Number:
Drawing Number: L9000-0903
Sheet: 2 OF 8
Revision #:
Revision Notes: A. Revised to Comply w/ 2010 FBC
Drawn By: N. ERAZO
Date Drawn: 06/04/09
Revised By: N. ERAZO
Date Revised: 01/20/12
Revision Level: A
Scale:

THOMAS J. SOTOS
PROFESSIONAL ENGINEER
FL LIC. # 55225

THOMAS J. SOTOS
LICENSE
55225
STATE OF FLORIDA
PROFESSIONAL ENGINEER

DATE: MARCH 2010

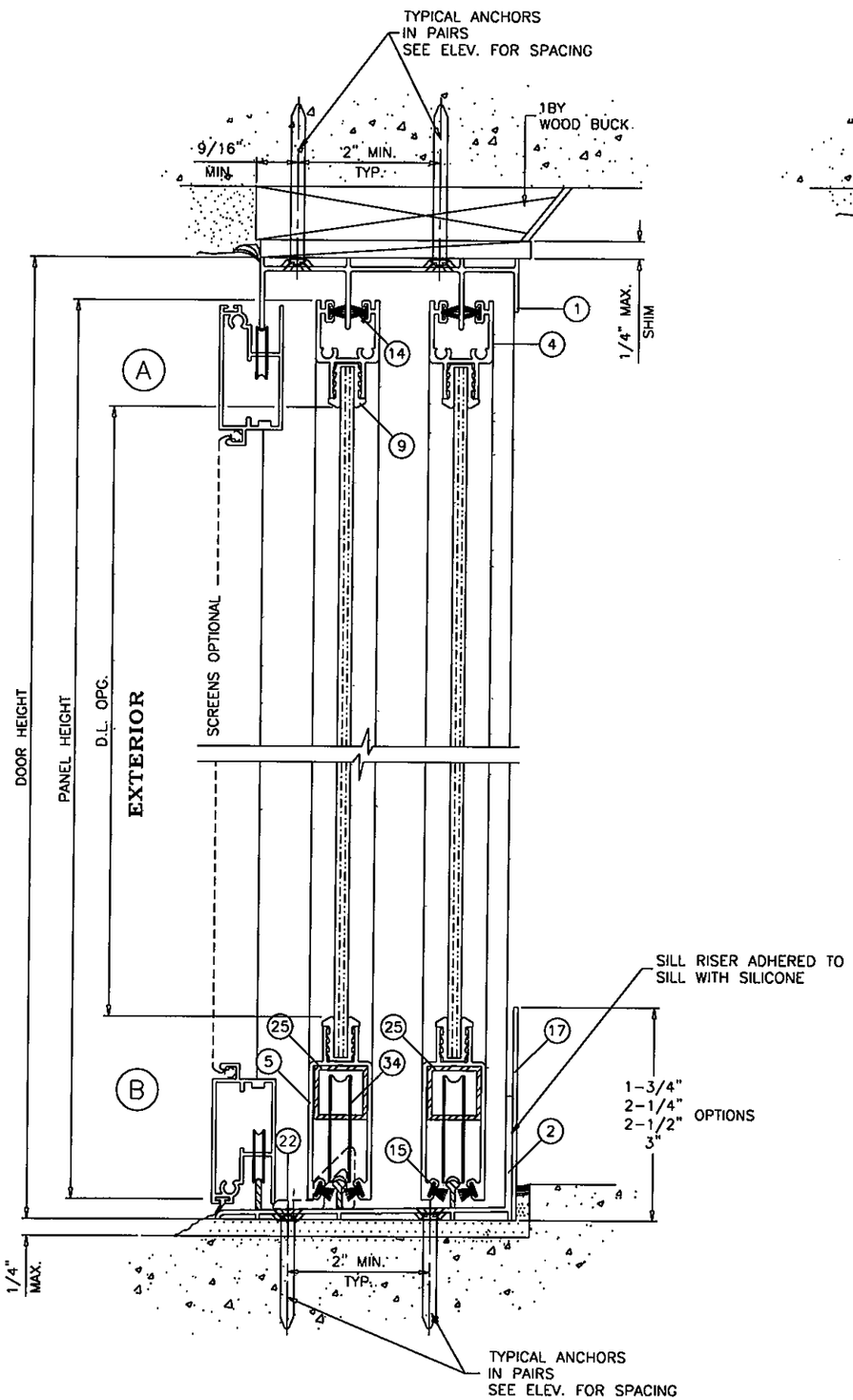

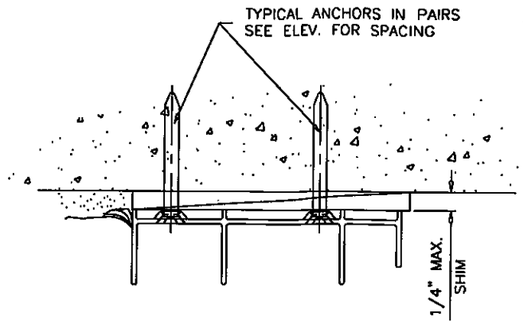

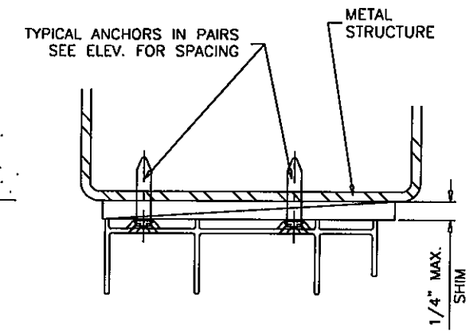

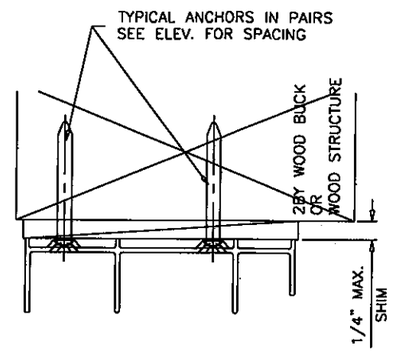

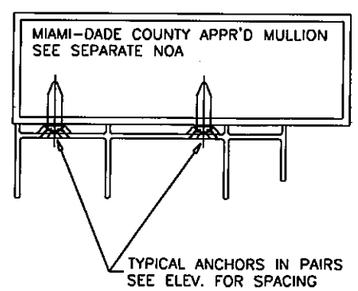

WOOD BUCKS AND METAL STRUCTURES NOT BY LAWSON IND. MUST SUPPORT LOADS IMPOSED BY GLAZING SYSTEM AND TRANSFER THEM TO THE BUILDING STRUCTURE.

TYPICAL ANCHORS:

1/4" DIA TAPCONS SEE ELEV. FOR SPACING
INTO 2BY WOOD BUCKS OR WOOD STRUCTURE
1-3/8" MIN. PENETRATION INTO WOOD

THRU 1BY WOOD BUCKS INTO MASONRY OR CONC.
1-1/4" MIN. EMBED INTO MASONRY OR CONC.

DIRECTLY INTO CONCRETE OR MASONRY
1-1/4" MIN. EMBED INTO CONCRETE OR MASONRY

#14 SMS OR SELF DRILLING SCREWS
INTO METAL STRUCTURES
STEEL : 12 GA. MIN. (Fy = 36 KSI MIN.)
ALUMINUM : 1/8" THK. MIN. (6063-T5 MIN.)

#10 SMS
INTO MIAMI-DADE COUNTY APPROVED MULLIONS (MIN. THK. = 1/8")
(NO SHIM SPACE)

TYPICAL EDGE DISTANCES
INTO CONCRETE AND MASONRY = 2-1/2" MIN.
INTO WOOD STRUCTURE = 1" MIN. (OR AS SHOWN)
INTO METAL STRUCTURE = 3/4" MIN.

SEALANTS:

ALL FRAME AND PANEL JOINT, INSTALLATION SCREWS AND HEADS OF ANCHOR SCREWS AT SILL TO BE SEALED WITH SEALANT.

TWO (2) TRACK SECTION

PRODUCT RENEWED
as complying with the Florida
Building Code
Acceptance No 12-0127.05
Expiration Date 02/26/2017
By
Miami Dade Product Control

LAWSON INDUSTRIES, INC.
MANUFACTURER OF QUALITY ALUMINUM WINDOWS AND GLASS DOORS
8501 N.W. 90 ST.
MEDLEY, FLORIDA 33166
PH No. (305) 696-8660

SGD-9000 ALUMINUM SLIDING GLASS DOOR (N.I.)
HEAVY STEEL REINFORCEMENT
2 TRACK VERTICAL SECTIONS, ANCHOR DETAILS & NOTES

Revision #:	
Product Reference Number:	
Drawing Number:	L9000-0903
Sheet:	3 OF 8
Date Drawn:	06/04/09
Date Revised:	01/20/12
Scale:	
Drawn By:	N. ERAZO
Revised By:	N. ERAZO
Revision Level:	A

Revision Notes:
A. Revised to Comply w/ 2010 FBC

THOMAS J. SOTOS
PROFESSIONAL ENGINEER
FL LIC. No. 55225

THOMAS J. SOTOS
LICENSE No 55225
STATE OF FLORIDA
PROFESSIONAL ENGINEER

DATE: MAR 05 2012

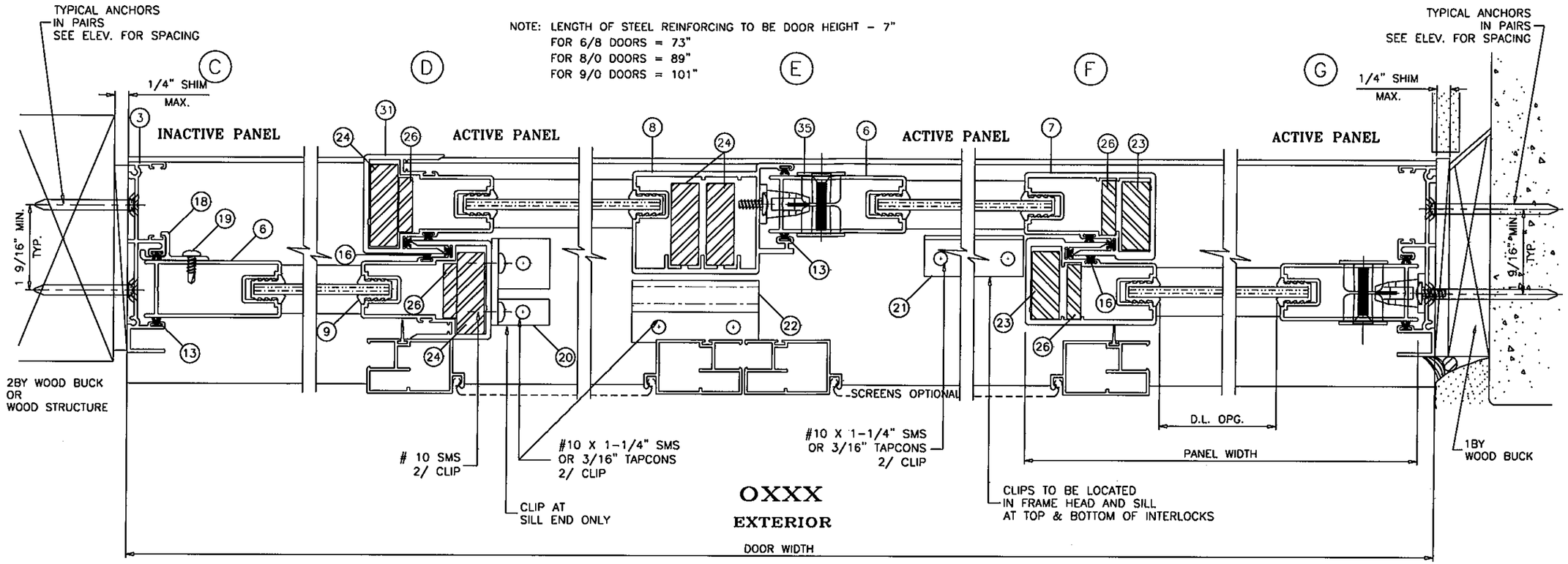

OXXX

EXTERIOR

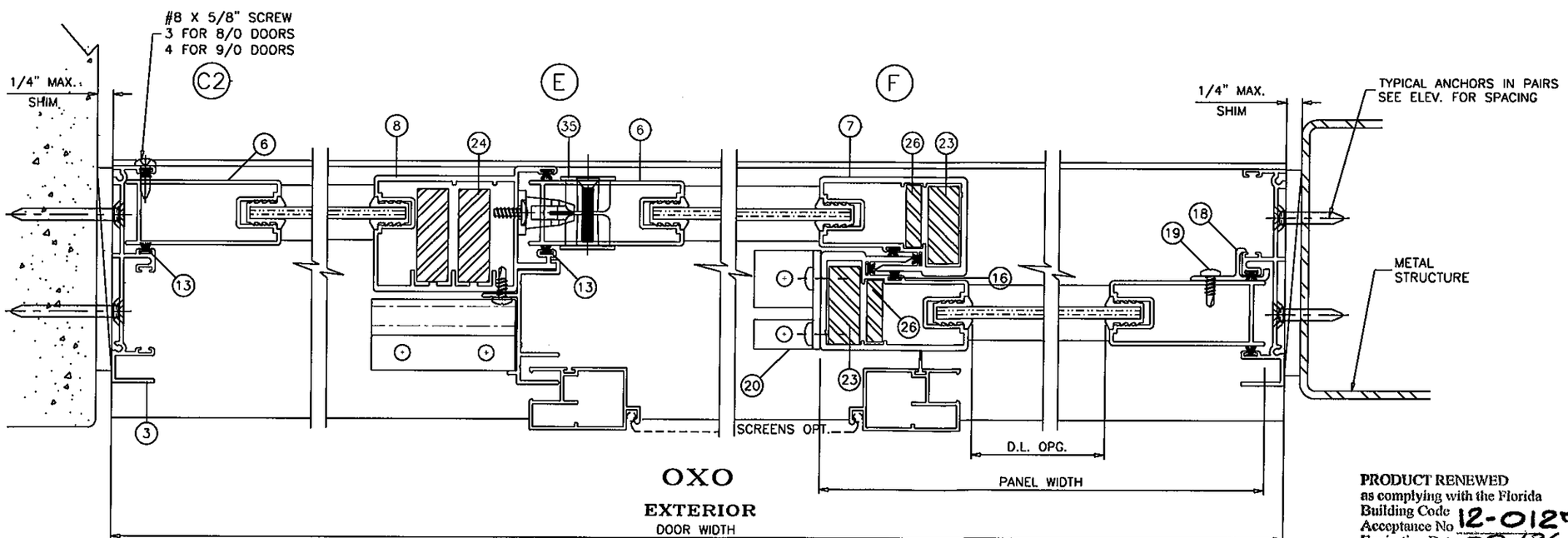

OXO

EXTERIOR

TWO (2) TRACK SECTION

PRODUCT RENEWED
as complying with the Florida
Building Code
Acceptance No 12-0127.05
Expiration Date 08/26/2017
By
Miami Dade Product Control

LAWSON INDUSTRIES, INC.

8501 N.W. 90 ST.
MEDLEY, FLORIDA 33166
PH No. (305) 696-8660

MANUFACTURER OF QUALITY ALUMINUM WINDOWS AND GLASS DOORS

SGD-9000 ALUMINUM SLIDING GLASS DOOR (N.I.)
HEAVY STEEL REINFORCEMENT
2 TRACK HORIZONTAL CROSS SECTIONS

Revision #:
Sheet: 4 OF 8
Drawing Number: L9000-0903
Product Reference Number:

Revision Notes: A. Revised to Comply w/ 2010 FBC
Drawn By: N. ERAZO — Date Drawn: 06/04/09
Revised By: N. ERAZO — Date Revised: 01/20/12
Revision Level: A — Scale:

THOMAS J. SOTOS
PROFESSIONAL ENGINEER
FL LIC. #55225

THOMAS J. SOTOS
LICENSE No 55225
STATE OF FLORIDA
PROFESSIONAL ENGINEER

DATE:

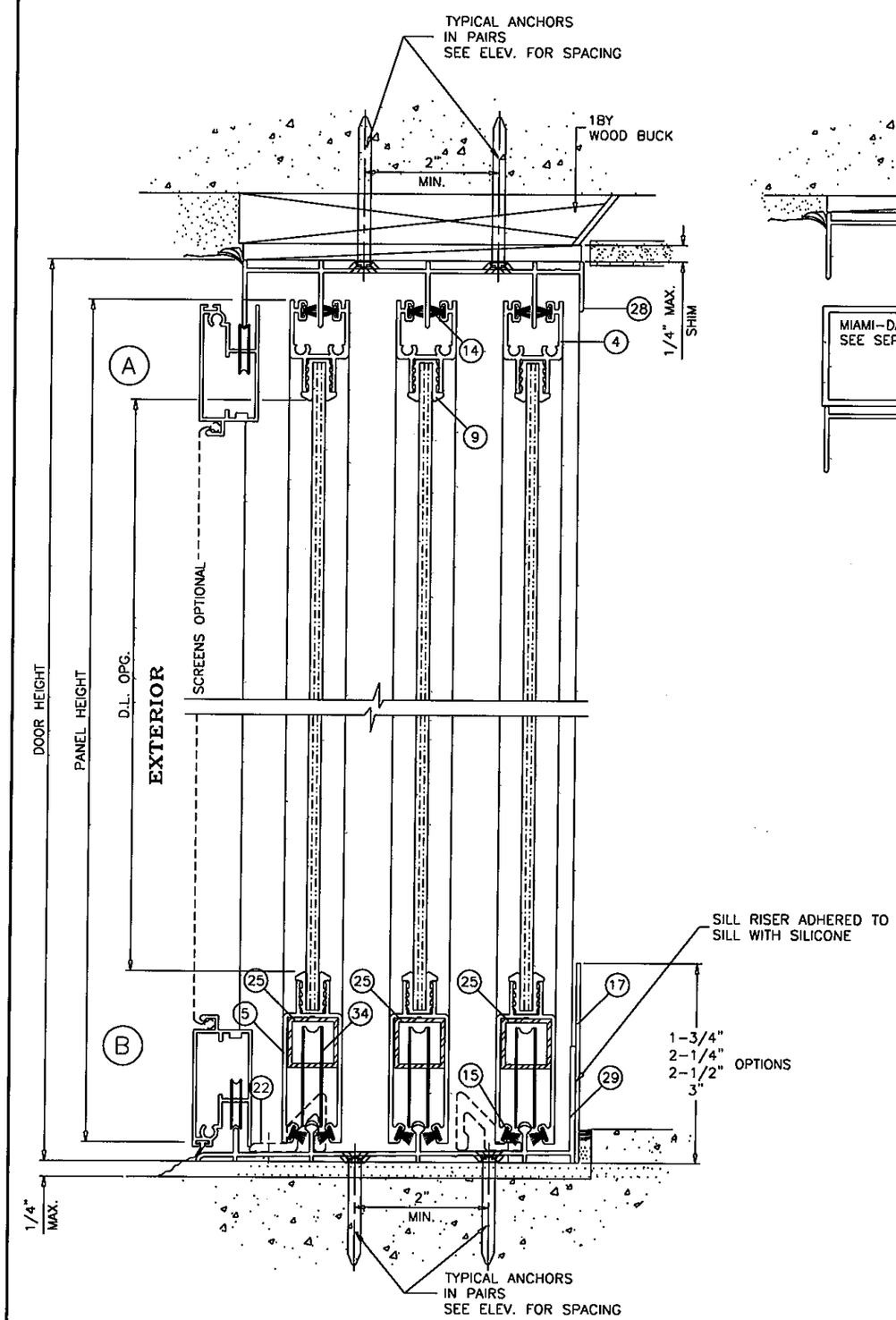

THREE (3) TRACK SECTION

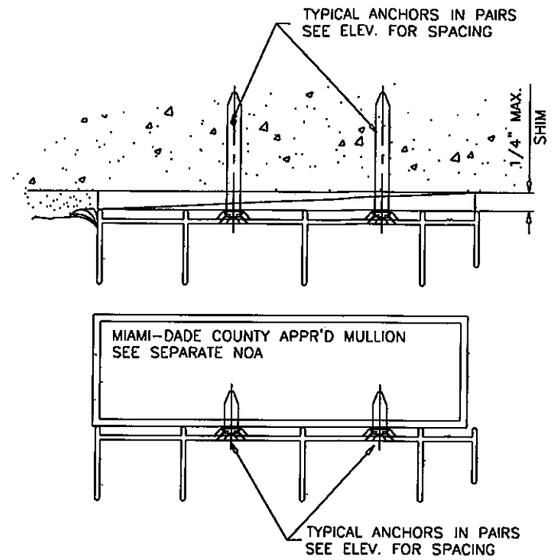

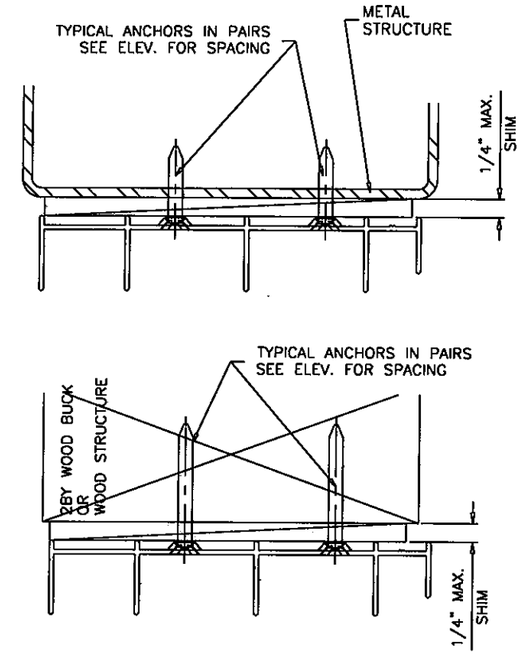

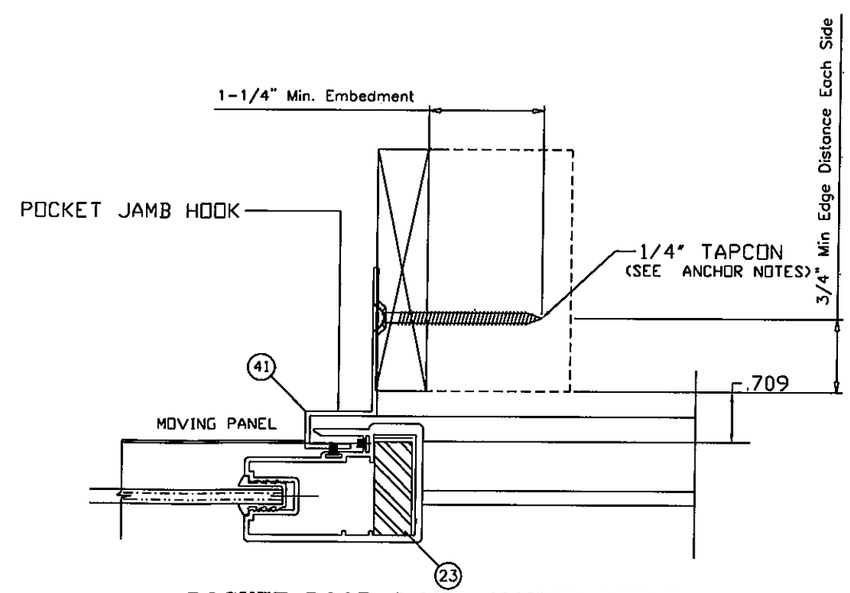

POCKET DOOR JAMB ANCHOR DETAIL

PRODUCT RENEWED
as complying with the Florida
Building Code
Acceptance No 12-0127.05
Expiration Date 08/26/2017
By
Miami Dade Product Control

LAWSON INDUSTRIES, INC.

8501 N.W. 90 ST.
MEDLEY, FLORIDA 33166
PH No. (305) 696-8660

MANUFACTURER OF QUALITY ALUMINUM WINDOWS AND GLASS DOORS

SGD-9000 ALUMINUM SLIDING GLASS DOOR (N.I.)
HEAVY STEEL REINFORCEMENT
3 TRACK VERTICAL CROSS SECTIONS, ANCHOR DETAILS & NOTES

Product Reference Number:
Drawing Number: L9000-0903
Sheet: 5 OF 8
Revision #:

Revision Notes: A. Revised to Comply w/ 2010 FBC
Drawn By: N. ERAZO
Date Drawn: 06/04/09
Revised By: N. ERAZO
Date Revised: 01/20/12
Revision Level: A
Scale:

THOMAS J. SOTOS
PROFESSIONAL ENGINEER
FL LIC. # 55225

THOMAS J. SOTOS
LICENSE
No 55225
STATE OF FLORIDA
PROFESSIONAL ENGINEER

DATE: MAR 06 2009

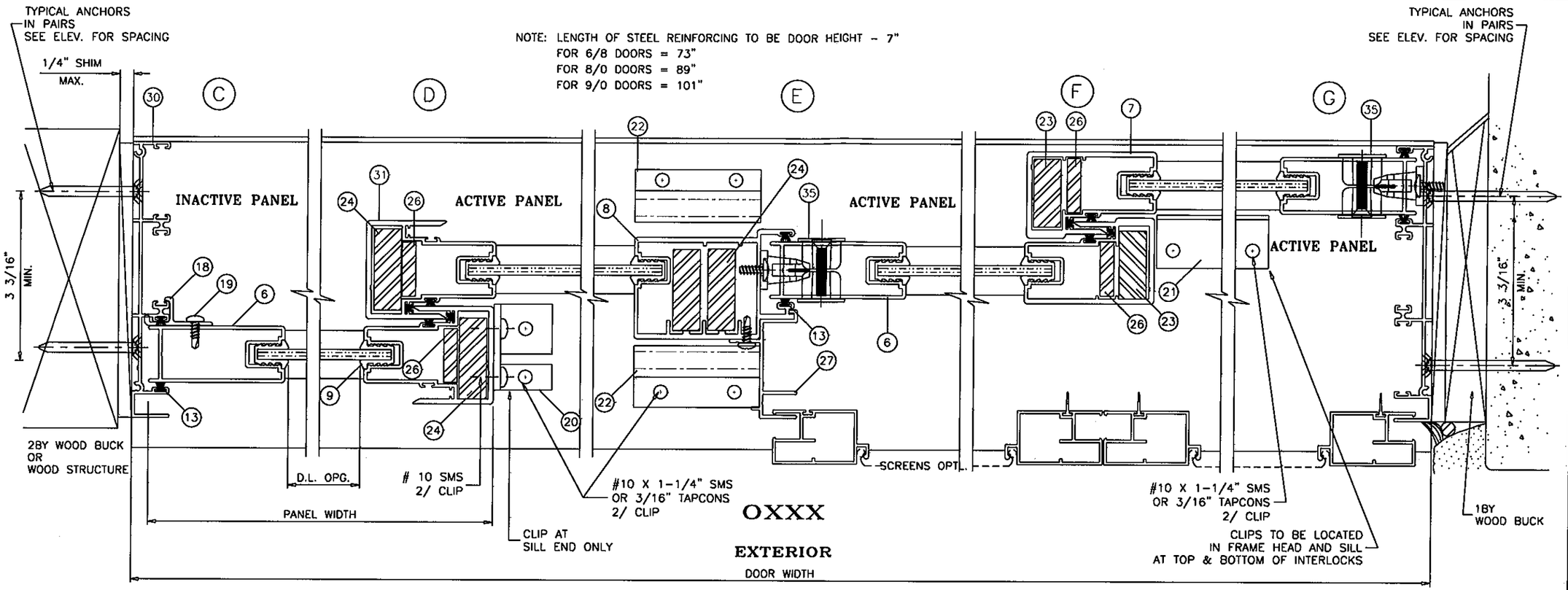

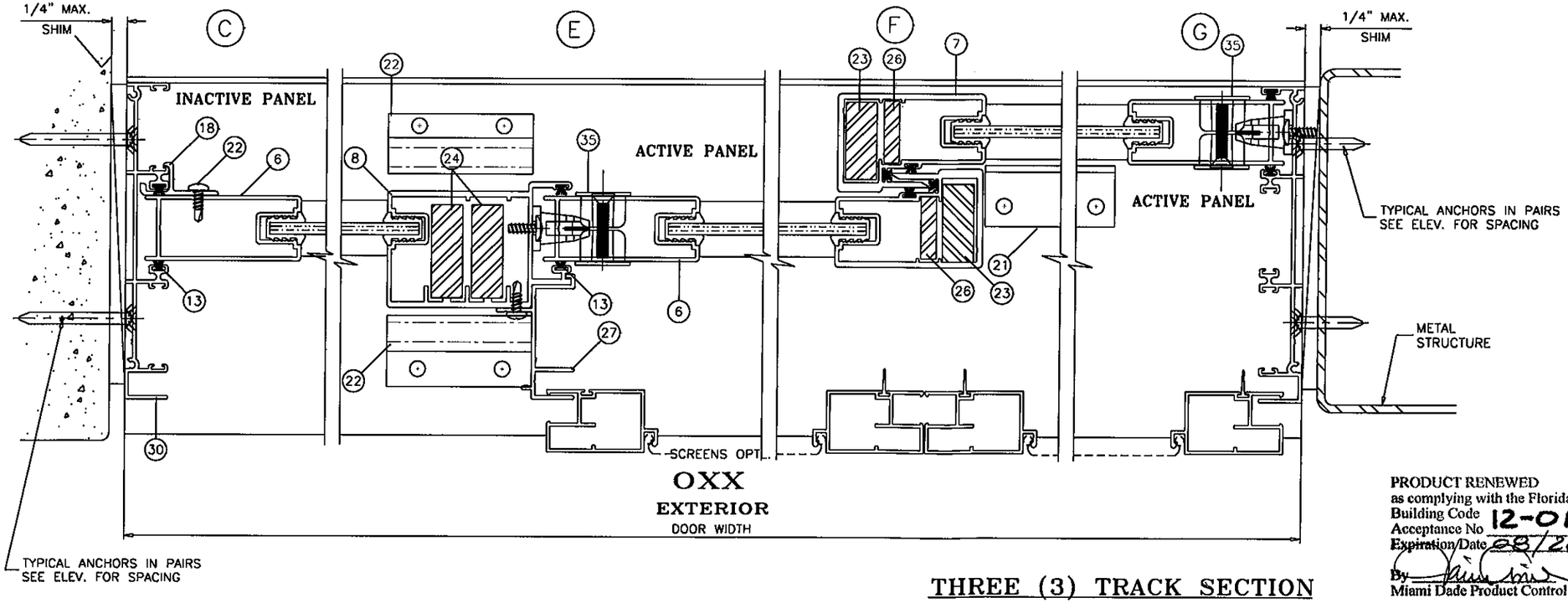

THREE (3) TRACK SECTION

PRODUCT RENEWED
as complying with the Florida
Building Code
Acceptance No 12-0127.06
Expiration Date 08/26/2017
By
Miami Dade Product Control

LAWSON INDUSTRIES, INC.
8501 N.W. 90 ST.
MEDLEY, FLORIDA 33166
PH No. (305) 696-8660

MANUFACTURER OF QUALITY ALUMINUM WINDOWS AND GLASS DOORS

SGD-9000 ALUMINUM SLIDING GLASS DOOR (N.I.)
HEAVY STEEL REINFORCEMENT
3 TRACK HORIZONTAL CROSS SECTIONS

Revision #:
Sheet: 6 OF 8
Drawing Number: L9000-0903
Product Reference Number:

Revision Notes: A. Revised to Comply w/ 2010 FBC
Drawn By: N. ERAZO
Date Drawn: 06/04/09
Revised By: N. ERAZO
Date Revised: 01/20/12
Revision Level: A
Scale:

THOMAS J. SOTOS
PROFESSIONAL ENGINEER
FL LICENSE No 55225

STATE OF FLORIDA
LICENSE No 55225
THOMAS J. SOTOS
PROFESSIONAL ENGINEER

DATE:

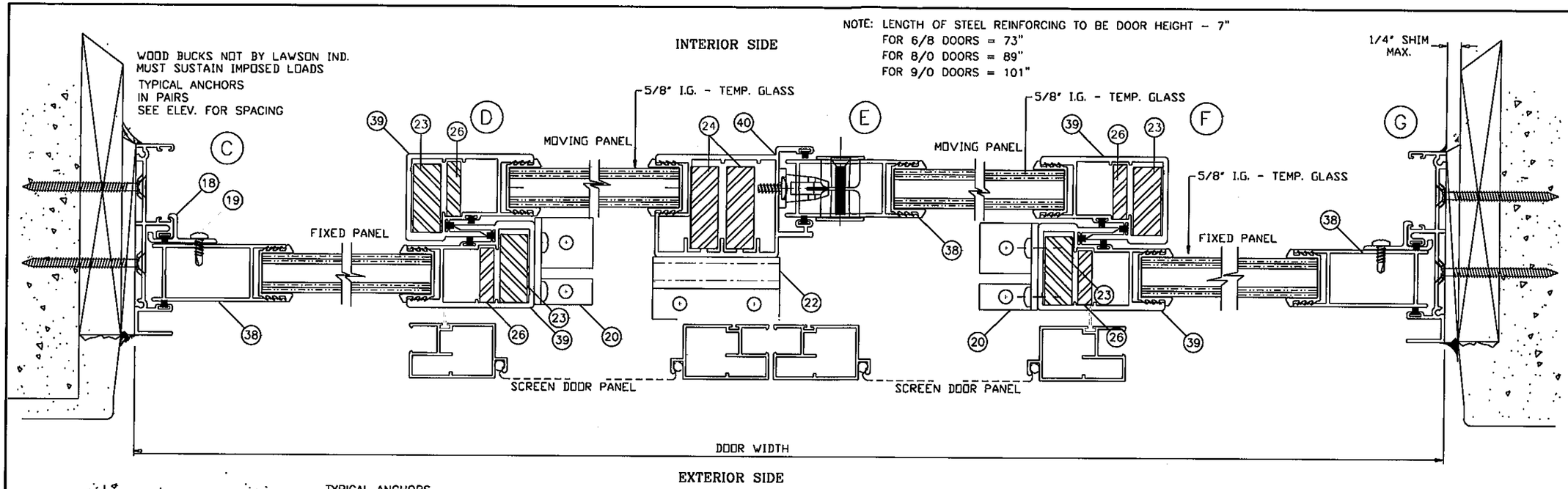

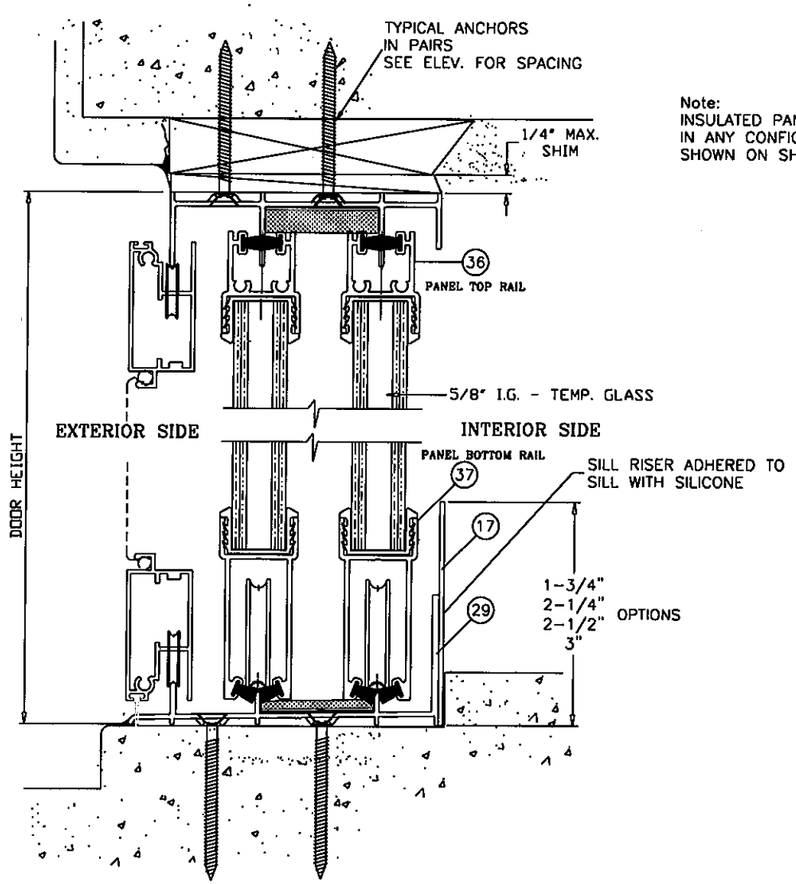

Note:
INSULATED PANELS APPROVED TO BE USED IN ANY CONFIGURATION SIMILAR TO THOSE AS SHOWN ON SHEETS 4, 5, & 6.

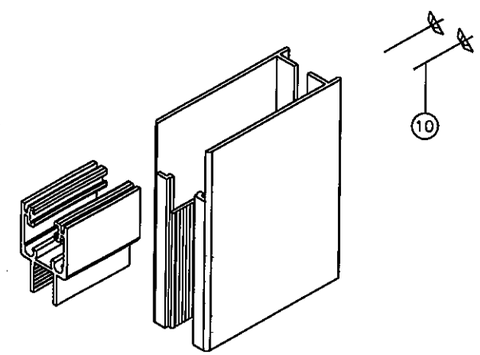

PANEL TOP CORNER

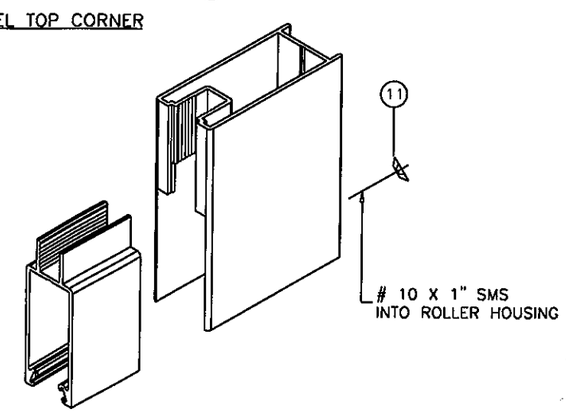

PANEL BOTTOM CORNER

PRODUCT RENEWED
as complying with the Florida
Building Code
Acceptance No 12-0127.05
Expiration Date 05/26/2017
By
Miami Dade Product Control

LAWSON INDUSTRIES, INC.
MANUFACTURER OF QUALITY ALUMINUM WINDOWS AND GLASS DOORS
8501 N.W. 90 ST.
MEDLEY, FLORIDA 33166
PH No. (305) 696-8660

SGD-9000 ALUMINUM SLIDING GLASS DOOR (N.I.)
HEAVY STEEL REINFORCEMENT
INSULATED DOOR PANEL SECTIONS & PANEL TYPE DETAILS

Product Reference Number:
Drawing Number: L9000-0903
Sheet: 7 OF 8
Revision #:

Revision Notes: A. Revised to Comply w/ 2010 FBC
Revision By: N. ERAZO
Revised By: N. ERAZO
Revision Level: A
Date Drawn: 08/04/09
Date Revised: 01/20/12
Scale:

THOMAS J. SOTOS
PROFESSIONAL ENGINEER
FL LIC. No 55225

THOMAS J. SOTOS LICENSE No 55225 STATE OF FLORIDA PROFESSIONAL ENGINEER

DATE:

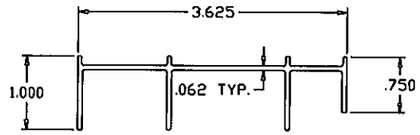

FRAME HEAD (2) TRACK

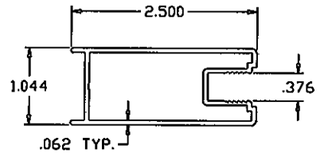

LOCK STILE

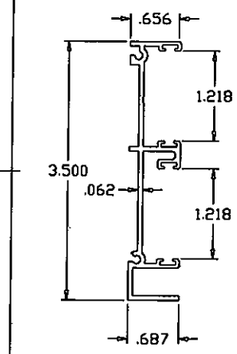

FRAME JAMB (2) TRACK

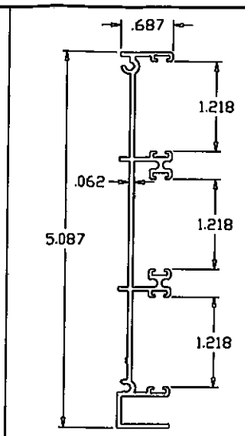

FRAME JAMB (3) TRACK

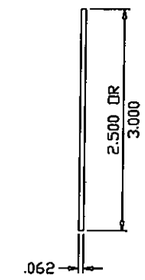

SILL RISER
FOR 2 & 3 TRACKS

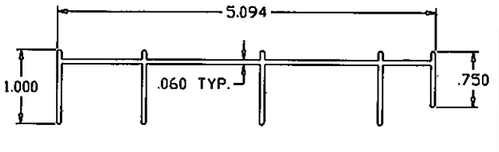

FRAME HEAD (3) TRACK

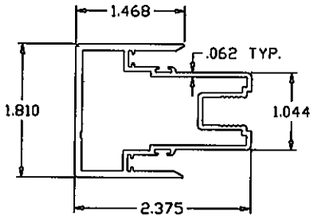

DOUBLE INTERLOCK

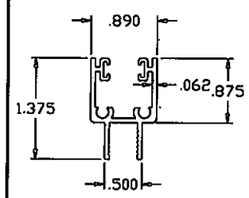

PANEL TOP RAIL

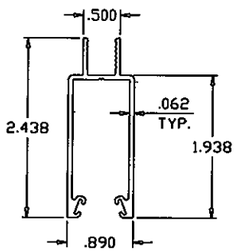

PANEL BOTTOM RAIL

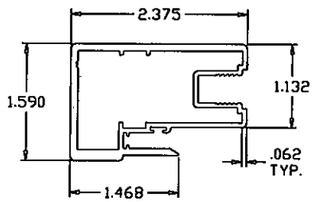

SINGLE INTERLOCK

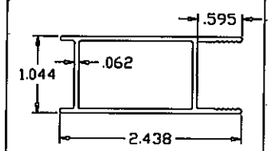

INSULATED LOCK STILE

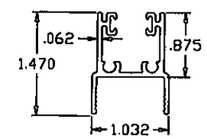

INSULATED PANEL TOP RAIL

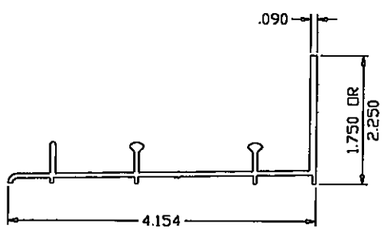

FRAME SILL (2) TRACK

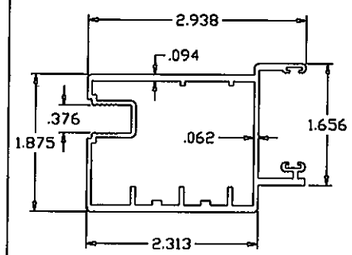

ASTRAGAL STILE

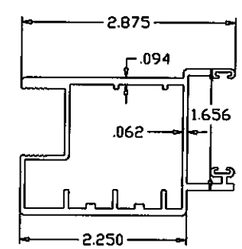

INSULATED ASTRAGAL

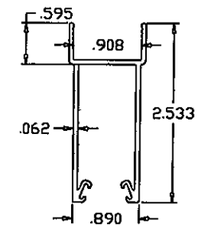

INSULATED BOTTOM RAIL

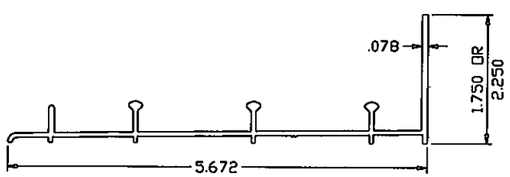

FRAME SILL (3) TRACK

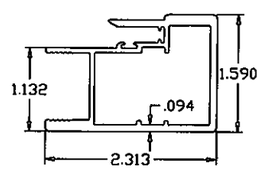

INSULATED INTERLOCK

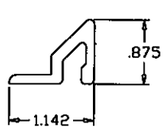

ASTRAGAL RETAINER CLIP

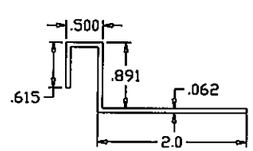

JAMB HOOK

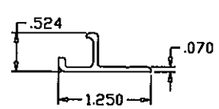

FIXED PANEL CLIP

Flexible Vinyl (FPVC) Composition - Team Plastics, Inc.

***1. FPVC Black: Compound No. 7200-75**

PHYSICAL		ASTM NO.
Durometer Hardness "A", 10 sec	75	D-2240
Specific Gravity	1.45	D-792
Tensile Strength, PSI	1640	D-638
Ultimate Elongation, %	340.0	D-638
Modulus @ 100% Elongation, PSI	765.0	D-638
Impact Brittleness,	-31.0	D-746

***2. FPVC White: Compound No. 7267-75**

PHYSICAL		ASTM NO.
Durometer Hardness "A", 10 sec	75	D-2240
Specific Gravity	1.45	D-792
Tensile Strength, PSI	1640	D-638
Ultimate Elongation, %	325.0	D-638
Modulus @ 100% Elongation, PSI	765.0	D-638
Impact Brittleness,	-30.0	D-746

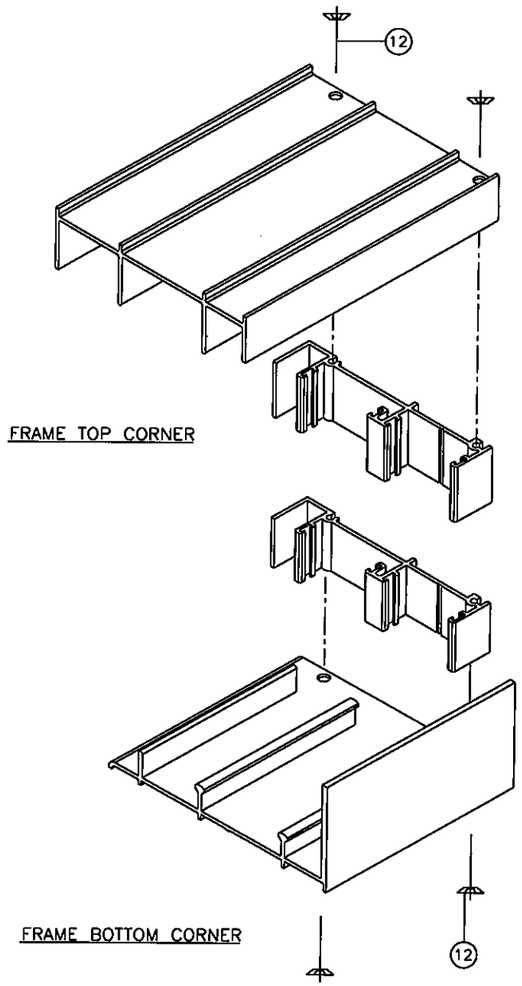

FRAME TOP CORNER

FRAME BOTTOM CORNER

PRODUCT RENEWED
as complying with the Florida
Building Code
Acceptance No 12-0127.05
Expiration Date 08/26/2017
By
Miami Dade Product Control

THOMAS J. SOTOS
PROFESSIONAL ENGINEER
FL LIC. No 55225

THOMAS J. SOTOS
LICENSE No 55225
STATE OF FLORIDA
PROFESSIONAL ENGINEER

DATE:

LAWSON INDUSTRIES, INC.
8501 N.W. 90 ST.
MEDLEY, FLORIDA 33166
PH No. (305) 696-8660

MANUFACTURER OF QUALITY ALUMINUM WINDOWS AND GLASS DOORS

SGD-9000 ALUMINUM SLIDING GLASS DOOR (N.I.)

HEAVY STEEL REINFORCEMENT

EXTRUSTION SECTION DRAWINGS & FRAME ASSEMBLY DETAIL

Product Reference Number:	Drawing Number: L9000-0903	Sheet: 8 OF 8	Revision #:
Date Drawn: 06/04/09	Date Revised: 01/20/12	Scale:	
Drawn By: N. ERAZO	Revised By: N. ERAZO	Revision Level: A	

Revision Notes:
A. Revised to Comply w/ 2010 FBC