MIAMI-DADE COUNTY
DEPARTMENT OF PERMITTING, ENVIRONMENT, AND REGULATORY AFFAIRS (PERA)
BOARD AND CODE ADMINISTRATION DIVISION

MIAMI-DADE COUNTY
PRODUCT CONTROL SECTION
11805 SW 26 Street, Room 208
Miami, Florida 33175-2474
T (786) 315-2590 F (786) 315-2599
www.miamidade.gov/pera/

NOTICE OF ACCEPTANCE (NOA)

Lawson Industries, Inc.
8501 NW 90 Street
Medley, FL 33166

SCOPE:

This NOA is being issued under the applicable rules and regulations governing the use of construction materials. The documentation submitted has been reviewed and accepted by Miami-Dade County PERA - Product Control Section to be used in Miami Dade County and other areas where allowed by the Authority Having Jurisdiction (AHJ).

This NOA shall not be valid after the expiration date stated below. The Miami-Dade County Product Control Section (In Miami Dade County) and/or the AHJ (in areas other than Miami Dade County) reserve the right to have this product or material tested for quality assurance purposes. If this product or material fails to perform in the accepted manner, the manufacturer will incur the expense of such testing and the AHJ may immediately revoke, modify, or suspend the use of such product or material within their jurisdiction. PERA reserves the right to revoke this acceptance, if it is determined by Miami-Dade County Product Control Section that this product or material fails to meet the requirements of the applicable building code.

This product is approved as described herein, and has been designed to comply with the Florida Building Code, including the High Velocity Hurricane Zone.

DESCRIPTION: Series "3000" Outswing Aluminum Casement Window – N.I.

APPROVAL DOCUMENT: Drawing No. **L3000-0701.001**, titled "Series: 3000 Outswing Casement Window", sheets 1 through 10 of 10, dated 10/27/07, with revision A dated 01/20/12, prepared by manufacturer, signed and sealed by Thomas J. Sotos, P.E., bearing the Miami-Dade County Product Control Revision stamp with the Notice of Acceptance number and expiration date by the Miami-Dade County Product Control Section.

MISSILE IMPACT RATING: None

LABELING: Each unit shall bear a permanent label with the manufacturer's name or logo, city, state, model/series, and following statement: "Miami-Dade County Product Control Approved", unless otherwise noted herein.

RENEWAL of this NOA shall be considered after a renewal application has been filed and there has been no change in the applicable building code negatively affecting the performance of this product.

TERMINATION of this NOA will occur after the expiration date or if there has been a revision or change in the materials, use, and/or manufacture of the product or process. Misuse of this NOA as an endorsement of any product, for sales, advertising or any other purposes shall automatically terminate this NOA. Failure to comply with any section of this NOA shall be cause for termination and removal of NOA.

ADVERTISEMENT: The NOA number preceded by the words Miami-Dade County, Florida, and followed by the expiration date may be displayed in advertising literature. If any portion of the NOA is displayed, then it shall be done in its entirety.

INSPECTION: A copy of this entire NOA shall be provided to the user by the manufacturer or its distributors and shall be available for inspection at the job site at the request of the Building Official.

This NOA **revises NOA # 07-1218.08** and consists of this page 1 and evidence pages E-1, E-2 and E-3, as well as approval document mentioned above.

The submitted documentation was reviewed by **Manuel Perez, P.E.**

MIAMI-DADE COUNTY APPROVED

3/21/12

NOTICE OF ACCEPTANCE: EVIDENCE SUBMITTED

A. DRAWINGS

1. Manufacturer's die drawings and sections.
2. Drawing No. **L3000-0701.001**, Sheets 1 through 10 of 10, titled "Series: 3000 Outswing Aluminum Casement Window", dated 10/27/07, with revision A dated 01/20/12, prepared by manufacturer, signed and sealed by Thomas J. Sotos, P.E.

B. TESTS ***(All submitted under previous NOA #07-1218.08)***

1. Test reports on: 1) Uniform Static Air Pressure Test, Loading per FBC TAS 202-94 along with marked-up drawings and installation diagram of a series 3000 outswing aluminum casement window, X configuration, w/1/4" ann. glass, prepared by Hurricane Engineering & Testing, Inc., Test Report No. **HETI-07-4207A**, dated 07/10/07, signed and sealed by Candido F. Font, P.E.
2. Test reports on: 1) Uniform Static Air Pressure Test, Loading per FBC TAS 202-94 along with marked-up drawings and installation diagram of a series 3000 outswing aluminum casement window, X configuration, w/3/16" ann. glass, prepared by Hurricane Engineering & Testing, Inc., Test Report No. **HETI-07-4207B**, dated 07/10/07, signed and sealed by Candido F. Font, P.E.
3. Test reports on: 1) Uniform Static Air Pressure Test, Loading per FBC TAS 202-94 along with marked-up drawings and installation diagram of a series 3000 outswing aluminum casement window, X configuration, w/3/16" temp. glass, prepared by Hurricane Engineering & Testing, Inc., Test Report No. **HETI-07-4207C**, dated 07/10/07, signed and sealed by Candido F. Font, P.E.
4. Test reports on: 1) Uniform Static Air Pressure Test, Loading per FBC TAS 202-94 along with marked-up drawings and installation diagram of a series 3000 outswing aluminum casement window, XX configuration, w/1/4" ann. glass, prepared by Hurricane Engineering & Testing, Inc., Test Report No. **HETI-07-4207D**, dated 07/10/07, signed and sealed by Candido F. Font, P.E.
5. Test reports on: 1) Uniform Static Air Pressure Test, Loading per FBC TAS 202-94 along with marked-up drawings and installation diagram of a series 3000 outswing aluminum casement, XX configuration, w/3/16" ann. glass, prepared by Hurricane Engineering & Testing, Inc., Test Report No. **HETI-07-4207E**, dated 07/10/07, signed and sealed by Candido F. Font, P.E.
6. Test reports on: 1) Uniform Static Air Pressure Test, Loading per FBC TAS 202-94 along with marked-up drawings and installation diagram of a series 3000 outswing aluminum casement window with center fixed vent, XOX-UE configuration, w/3/16" ann. glass, prepared by Hurricane Engineering & Testing, Inc., Test Report No. **HETI-07-4207F**, dated 07/10/07, signed and sealed by Candido F. Font, P.E.

Manuel Perez

Manuel Perez, P.E.
Product Control Examiner
NOA No. 12-0127.20
Expiration Date: June 12, 2013
Approval Date: March 29, 2012

NOTICE OF ACCEPTANCE: EVIDENCE SUBMITTED

B. TESTS (CONTINUED) ***(All submitted under previous NOA #07-1218.08)***

7. Test reports on: 1) Uniform Static Air Pressure Test, Loading per FBC TAS 202-94 along with marked-up drawings and installation diagram of a series 3000 outswing aluminum casement window with center fixed vent, XOX-UE configuration, w/1/2" IG unit composed two 1/8" ann. glass, prepared by Hurricane Engineering & Testing, Inc., Test Report No. **HETI-07-4207G**, dated 07/10/07, signed and sealed by Candido F. Font, P.E.

8. Test reports on: 1) Air Infiltration Test, per FBC, TAS 202-94
2) Uniform Static Air Pressure Test, Loading per FBC TAS 202-94
3) Water Resistance Test, per FBC, TAS 202-94
4) Forced Entry Test, per FBC 2411 3.2.1, TAS 202-94
along with marked-up drawings and installation diagram of a series 3000 outswing aluminum casement window with center fixed vent, XOX-UE configuration, w/3/16" temp. glass, prepared by Hurricane Engineering & Testing, Inc., Test Report No. **HETI-07-4207H**, dated 07/10/07, signed and sealed by Candido F. Font, P.E.

9. Test reports on: 1) Air Infiltration Test, per FBC, TAS 202-94
2) Uniform Static Air Pressure Test, Loading per FBC TAS 202-94
3) Water Resistance Test, per FBC, TAS 202-94
4) Forced Entry Test, per FBC 2411 3.2.1, TAS 202-94
along with marked-up drawings and installation diagram of a series 3000 outswing aluminum casement window, XOX-UE configuration with center fixed vent, w/3/16" temp. glass, prepared by Hurricane Engineering & Testing, Inc., Test Report No. **HETI-07-4207I**, dated 07/10/07, signed and sealed by Candido F. Font, P.E.

10. Test reports on: 1) Air Infiltration Test, per FBC, TAS 202-94
2) Uniform Static Air Pressure Test, Loading per FBC TAS 202-94
3) Water Resistance Test, per FBC, TAS 202-94
4) Forced Entry Test, per FBC 2411 3.2.1, TAS 202-94
along with marked-up drawings and installation diagram of a series 3000 outswing aluminum casement window, XOX-UE configuration with center fixed vent, w/3/16" temp. glass, prepared by Hurricane Engineering & Testing, Inc., Test Report No. **HETI-07-4207J**, dated 07/10/07, signed and sealed by Candido F. Font, P.E.

C. CALCULATIONS

1. Anchor verification calculations and structural analysis, complying with FBC-2004, prepared by manufacturer, dated 11/15/07, signed and sealed by Thomas J. Sotos, P.E.

2. Glazing complies with ASTM E1300-98.

Manuel Perez, P.E.
Product Control Examiner
NOA No. 12-0127.20
Expiration Date: June 12, 2013
Approval Date: March 29, 2012

NOTICE OF ACCEPTANCE: EVIDENCE SUBMITTED

D. QUALITY ASSURANCE

1. Miami-Dade Department of Permitting, Environment, and Regulatory Affairs (PERA).

E. MATERIAL CERTIFICATIONS

1. None.

F. STATEMENTS

1. Statement letter of conformance, complying with FBC-2010, dated January 25, 2012, signed and sealed by Thomas J. Sotos, P.E.
2. Statement letter of no financial interest, dated August 1, 2007, signed and sealed by Thomas J. Sotos, P.E.
   (Submitted under previous NOA No. 07–1218.08)

G. OTHERS

1. Notice of Acceptance No. **07-1218.08**, issued to Lawson Industries, Inc. for their Series 3000 Outswing Aluminum Casement Window – N.I., approved on 06/12/08 and expiring on 06/12/13.

Manuel Perez, P.E.
Product Control Examiner
NOA No. 12-0127.20
Expiration Date: June 12, 2013
Approval Date: March 29, 2012

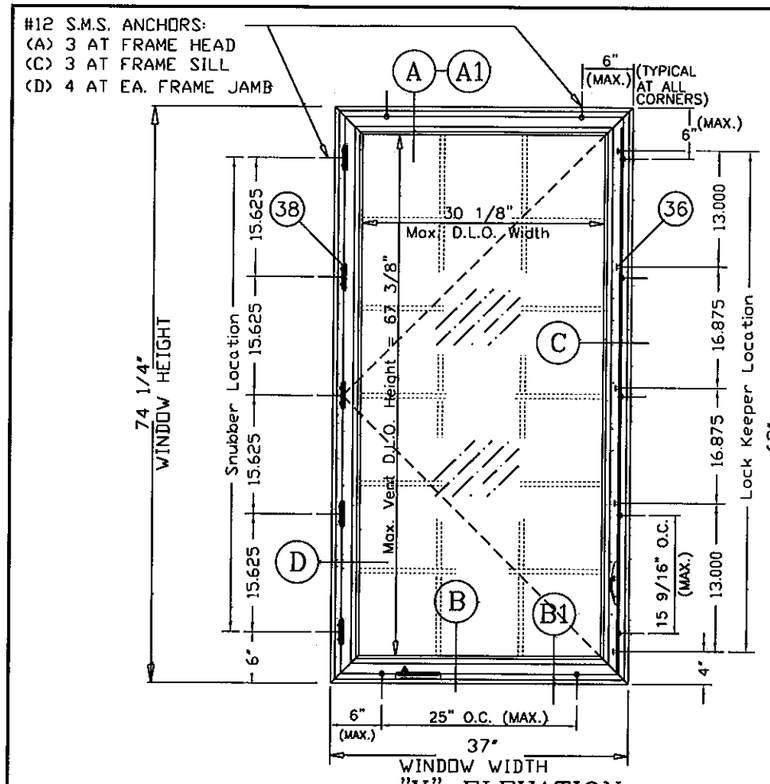

"X" ELEVATION
(LIMITED TO LOADS ON SHEET 6 OF 10)

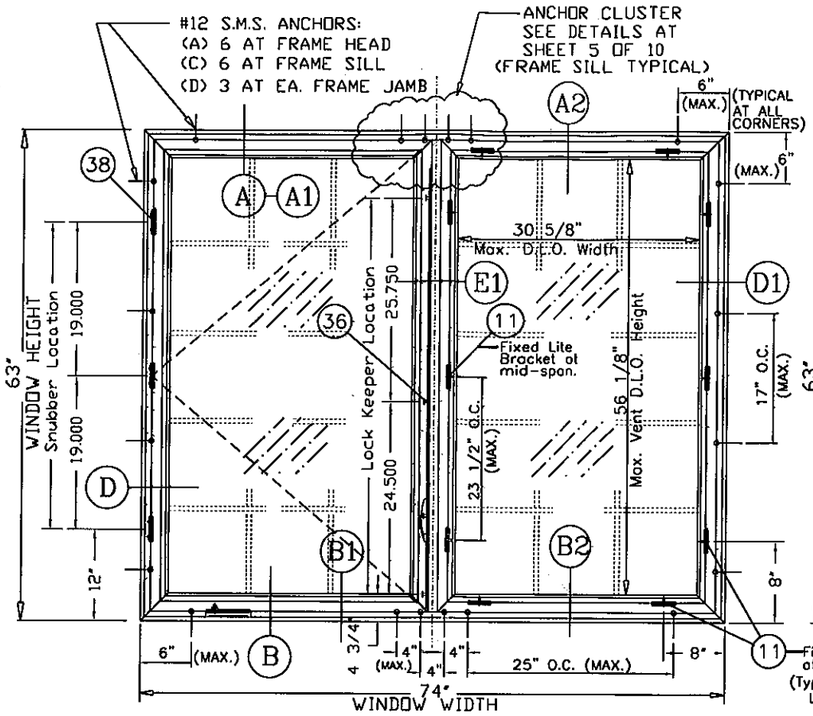

"XO" ELEVATION – (OX reversed)
(LIMITED TO LOADS ON SHEET 7 OF 10)

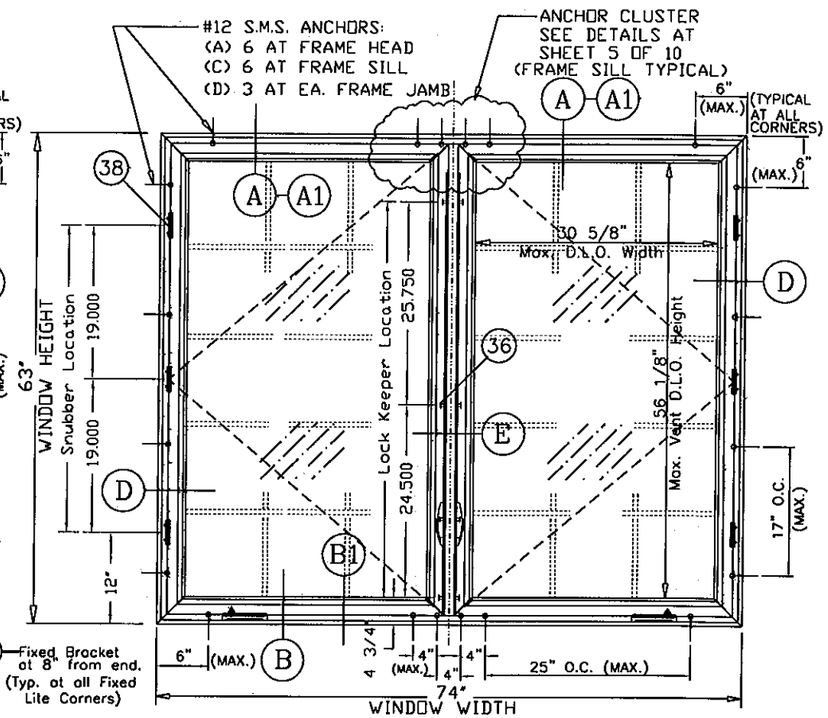

"XX" ELEVATION
(LIMITED TO LOADS ON SHEET 7 OF 10)

SERIES-3000 OUTSWING CASEMENT NON-IMPACT WINDOW APPROVED ELEVATIONS

General Notes:

1.) THIS WINDOW SYSTEM IS DESIGNED AND TESTED TO COMPLY WITH THE REQUIREMENTS OF THE 2010 FLORIDA BUILDING CODE AND ASTM 1300-98. THIS PRODUCT IS NOT IMPACT RESISTANT. WINDOWS ARE TO BE PROTECTED WITH MIAMI-DADE COUNTY APPROVED IMPACT RESISTANT SHUTTERS.
2.) 1 X OR 2 X WOOD BUCKS SHALL BE INSTALLED AND ANCHORED SO THAT THE BUILDING RESISTS THE SUPERIMPOSED LOADS IN ACCORDANCE WITH REQUIREMENTS OF 2010 F.B.C. & TO BE REVIEWED BY BUILDING OFFICIAL.
3.) ANCHORS SHOWN ABOVE ARE AS PER TEST UNITS. EXTERIOR ANCHOR SPACINGS WILL VARY WITH UNIT DIMENSIONS, AND THE NUMBER OF ANCHORS REQUIRED, AS SPECIFIED ON THE LOAD TABLES AT SHEETS 6, 7, & 8 OF 10.
4.) ANCHOR CONDITIONS NOT DESCRIBED IN THESE DRAWING'S ARE TO BE ENGINEERED ON A SITE SPECIFIC BASIS, UNDER SEPARATE APPROVAL AND TO BE REVIEWED BY BUILDING OFFICIAL.
5.) EQUAL LITE WINDOWS ARE QUALIFIED FOR USE WITH "XX", OX", "XO" AND "XOX", AND ALL GLASS TABULATED HEREIN.
6.) UN-EQUAL LITE WINDOWS ARE QUALIFIED FOR USE WITH "OXO", OX, AND "XO". AND ALL GLASS TABULATED HEREIN.
7.) SEE SHEET # 1 OF 10 AND # 2 OF 10 FOR CONFIGURATION OPTIONS & NOTES.
8.) SEE SHEET # 9 OF 10 FOR GLAZING DETAILS & OPTIONS. (REFER TO SHEETS 6, 7, & 8 FOR DESIGN PRESSURES.
9.) WOOD BUCKS IN CONTACT WITH CONCRETE MUST BE PRESSURE TREATED AND ANCHORED (BY OTHERS), PRIOR TO WINDOW INSTALLATION. (SEE SHEET #2 FOR DETAIL & NOTES)
10.) TEMPERED GLASS MAY BE USED, BUT DESIGN PRESSURES ARE LIMITED TO LOAD TABLES ON CHARTS FOR 1/4" MONOLITHIC & 1/2" INSULATED ANNEALED GLASS
11.) FRAME SILL ANCHOR CLIPS TO BE MEASURED FROM THE INSIDE EDGE OF THE WINDOW FRAME AND TO BE LOCATED WITHIN A +/- 1/2" TOLERANCE.
TOTAL OF ANCHORS REQUIRED AT SILL TO BE THE SAME AS FRAME HEAD.
12.) SEE SHEET # 4 OF 10 FOR FLANGE PERIMETER CAULK/ INSTALLATION DETAIL.
13.) MATERIALS: INCLUDING BUT NOT LIMITED TO STEEL SCREWS, THAT COME INTO CONTACT WITH OTHER DISSIMILAR MATERIALS SHALL MEET THE REQUIREMENTS OF SECTION 2003.8.4 OF THE 2010 FLORIDA BUILDING CODE.
14.) EXT. & INT. FALSE COLONIAL MUNTINS ARE OPTIONAL & AND ARE APPLIED W/ SILICONE

ANCHORS NOTE:
ANCHORS TO BE #12 SMS OR WD. SCREWS INTO WOOD, OR 1/4" TAPCONS INTO CONCRETE, WITH A MINIMUM OF 1 1/4" PENETRATION INTO WOOD OR CONCRETE.
(REFER TO LOAD TABLES FOR QUANTITIES REQUIRED)

WINDOWS ARE TO BE PROTECTED WITH MIAMI DADE COUNTY APPROVED IMPACT RESISTANT SHUTTERS

PRODUCT REVISED
as complying with the Florida Building Code
Acceptance No 12-0127.20
Expiration Date JUNE 14, 2013
By Manuel Perez
Miami Dade Product Control

THOMAS J. SOBOS
PROFESSIONAL ENGINEER
FL. LIC. # 55225
No 55225
STATE OF FLORIDA
PROFESSIONAL ENGINEER
DATE JAN 10 2012

Revision Notes: A. Revised to Comply w/ 2010 FBC	
Drawn By: N. ERAZO	Date Drawn: 10/27/07
Revised By: N. ERAZO	Date Revised: 01/20/12
Revision Level: A	Scale:

LAWSON INDUSTRIES, INC.
MANUFACTURER OF QUALITY ALUMINUM WINDOWS AND GLASS DOORS
8501 N.W. 90 ST.
MEDLEY, FLORIDA 33166
PH No. (305) 696-8660

Draw Class:	Part Class:	Prod Category:	Series/Model:	Item Reference #:	Revision #:
NOA	ELEVATIONS	WINDOW	3000	LCNOA 07-01	

Series: 3000 Outswing Casement Window
GENERAL NOTES & APPROVED ELEVATIONS (O, X, OX, XX)

Product Reference Number:	Drawing Number:	Sheet:
CASEMENT3000-07NOA-01	L3000-0701.001	1 OF 10

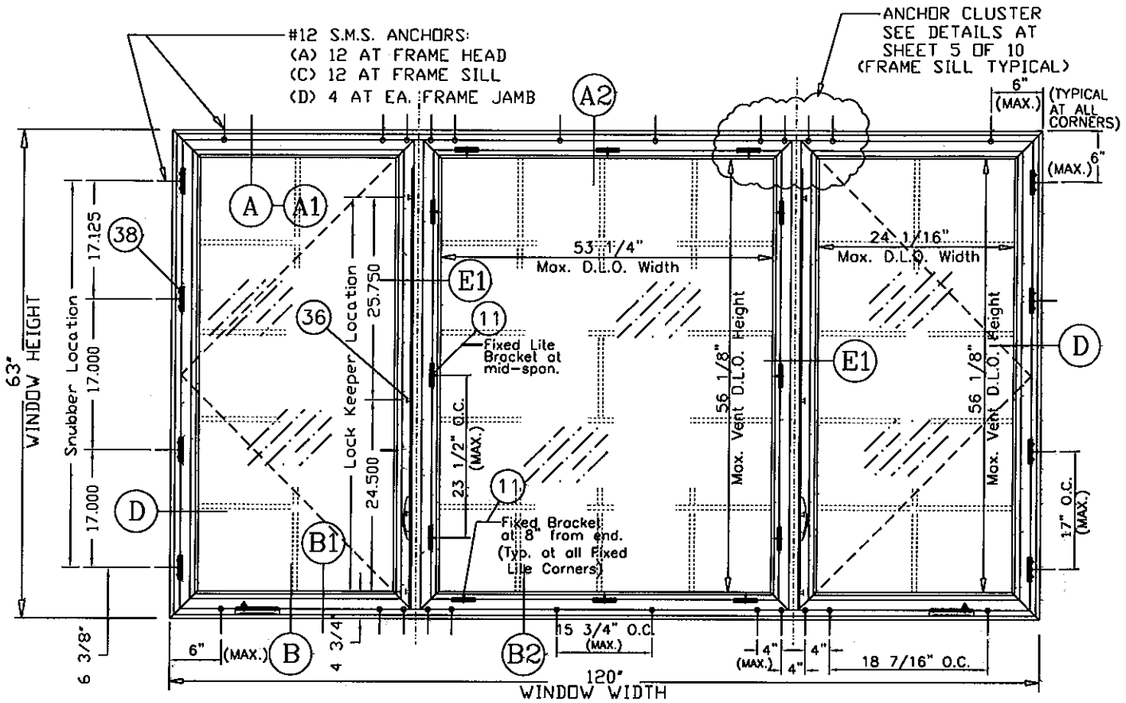

"XOX" (UN-EQUAL LITE) ELEVATION
(LIMITED TO LOADS ON SHEET 8 OF 10)

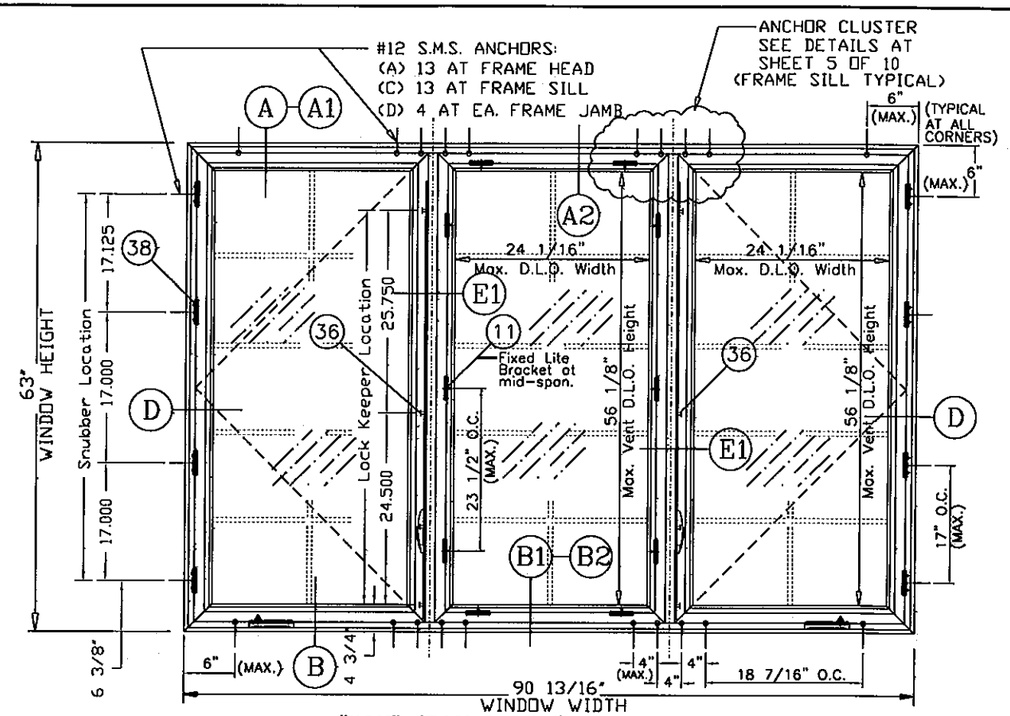

"XOX" (EQUAL LITE) ELEVATION
(LIMITED TO LOADS ON SHEET 8 OF 10)

SERIES-3000 OUTSWING CASEMENT NON-IMPACT WINDOW APPROVED ELEVATIONS

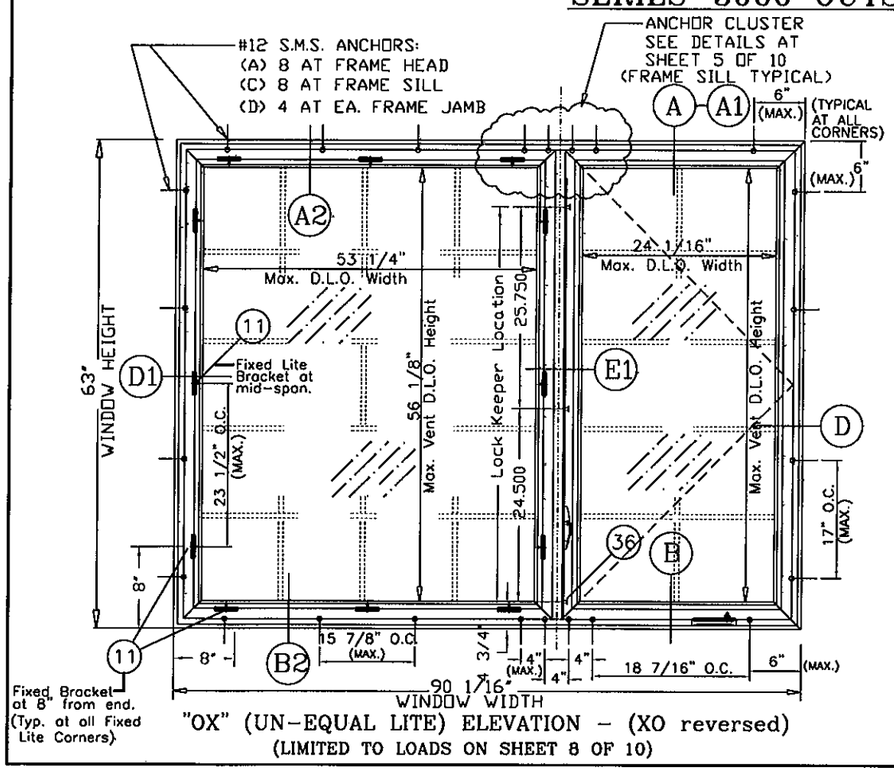

"OX" (UN-EQUAL LITE) ELEVATION – (XO reversed)
(LIMITED TO LOADS ON SHEET 8 OF 10)

ANCHORS NOTE:

ANCHORS TO BE #12 SMS OR WD. SCREWS INTO WOOD, OR 1/4" TAPCONS INTO CONCRETE, WITH A MINIMUM OF 1 1/4" PENETRATION INTO WOOD OR CONCRETE.
(REFER TO LOAD TABLES FOR QUANTITIES REQUIRED)

WINDOWS ARE TO BE PROTECTED WITH MIAMI DADE COUNTY APPROVED IMPACT RESISTANT SHUTTERS

PRODUCT REVISED
as complying with the Florida Building Code
Acceptance No 12-0127.20
Expiration Date JUNE 12, 2013
By Manuel Perez
Miami Dade Product Control

THOMAS A. SOTOS
PROFESSIONAL ENGINEER
LICENSE No. 55225
STATE OF FLORIDA
PROFESSIONAL ENGINEER
JAN 4 2012
DATE

Revision Notes: A. Revised to Comply w/ 2010 FBC	
Drawn By: N. ERAZO	Date Drawn: 10/27/07
Revised By: N. ERAZO	Date Revised: 01/20/12
Revision Level: A	Scale:

LAWSON INDUSTRIES, INC.
MANUFACTURER OF QUALITY ALUMINUM WINDOWS AND GLASS DOORS
8501 N.W. 90 ST.
MEDLEY, FLORIDA 33166
PH No. (305) 696-8660

Draw Class:	Part Class:	Prod Category:	Series/Model:	Item Reference #:	Revision #:
NOA	ELEVATIONS	WINDOW	3000	LCNOA 07-01	

Series: 3000 Outswing Casement Window
APPROVED ELEVATIONS (XOX-E, XOX-UE, OX, XO)

Product Reference Number:	Drawing Number:	Sheet:
CASEMENT3000-07NOA-01	L3000-0701.001	2 OF 10

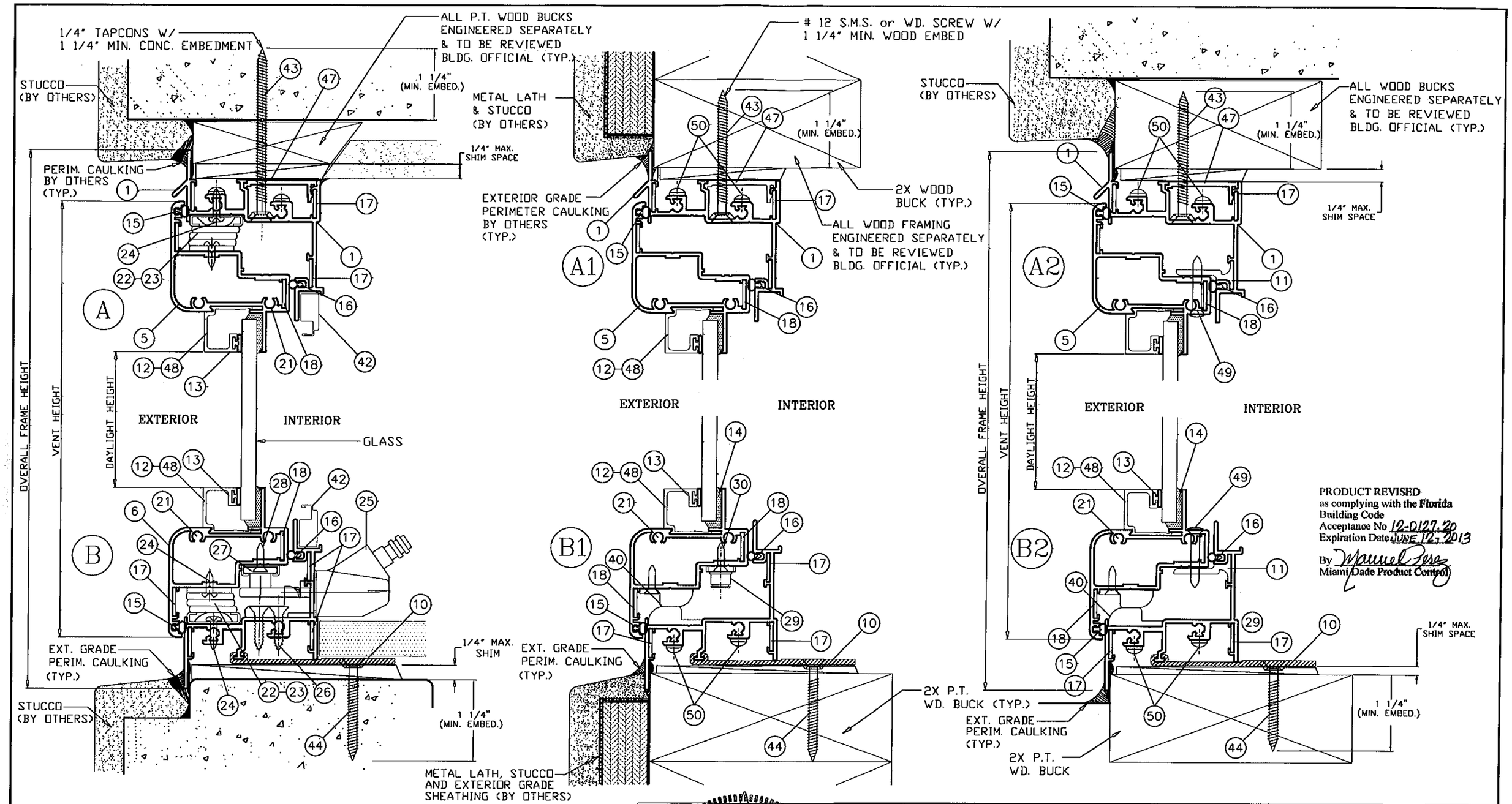

PRODUCT REVISED
as complying with the Florida Building Code
Acceptance No 12-0127.20
Expiration Date JUNE 12, 2013
By Manuel Perez
Miami Dade Product Control

* WHEN THE GAP BETWEEN THE WINDOW FRAME AND THE BUCK OR MASONRY IS LESS THAN 1/8", SHIMS ARE NOT REQUIRED.

ANCHORS NOTE:

ANCHORS TO BE #12 SMS OR WD. SCREWS INTO WOOD, OR 1/4" TAPCONS INTO CONCRETE, WITH A MINIMUM OF 1 1/4" PENETRATION INTO WOOD OR CONCRETE.
(REFER TO LOAD TABLES FOR QUANTITIES REQUIRED)

THOMAS J. SOTOS
PROFESSIONAL ENGINEER
LICENSE
No 55225
STATE OF FLORIDA
PROFESSIONAL ENGINEER
DATE JAN 24 2012

Revision Notes: A. Revised to Comply w/ 2010 FBC	
Drawn By: N. ERAZO	Date Drawn: 10/27/07
Revised By: N. ERAZO	Date Revised: 01/20/12
Revision Level: A	Scale:

LAWSON INDUSTRIES, INC.
8501 N.W. 90 ST.
MEDLEY, FLORIDA 33166
PH No. (305) 696-8660
MANUFACTURER OF QUALITY ALUMINUM WINDOWS AND GLASS DOORS

Draw Class:	Part Class:	Prod Category:	Series/Model:	Item Reference #:	Revision #:
NOA	ASSEMBLY	WINDOW	3000	LCNOA 07-01	

Series: 3000 Outswing Casement Window
VERTICAL CROSS-SECTIONS, NOTES & DETAILS

Product Reference Number:	Drawing Number:	Sheet:
CASEMENT3000-07NOA-01	L3000-0701.001	3 OF 10

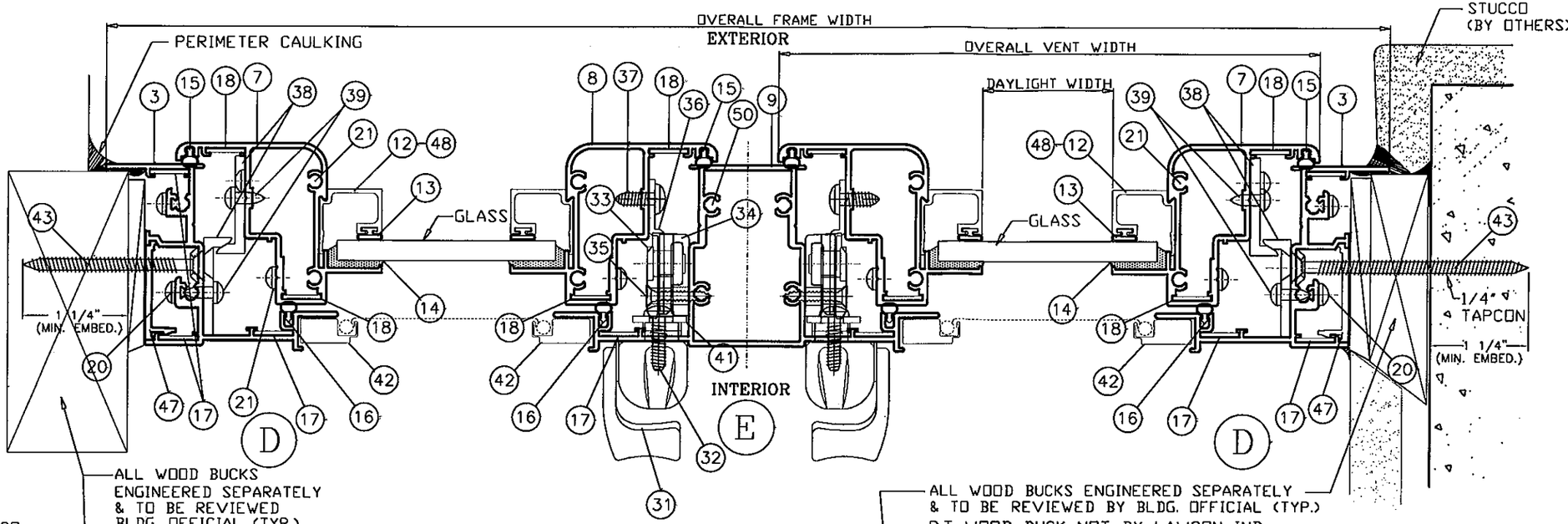

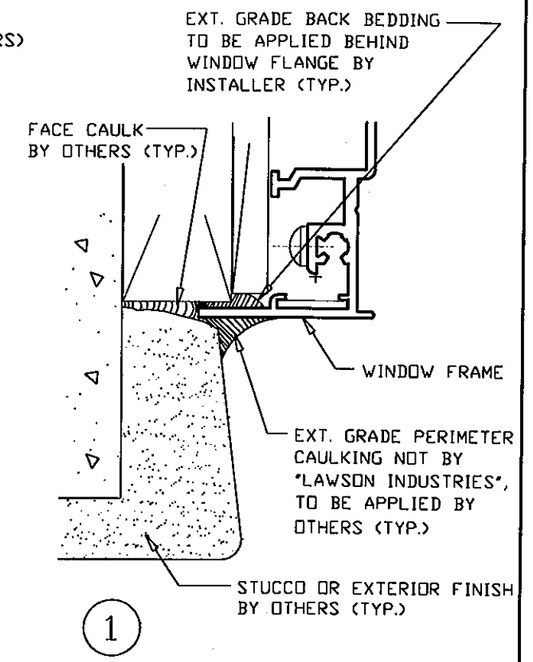

FRAME PERIMETER CAULK DETAIL

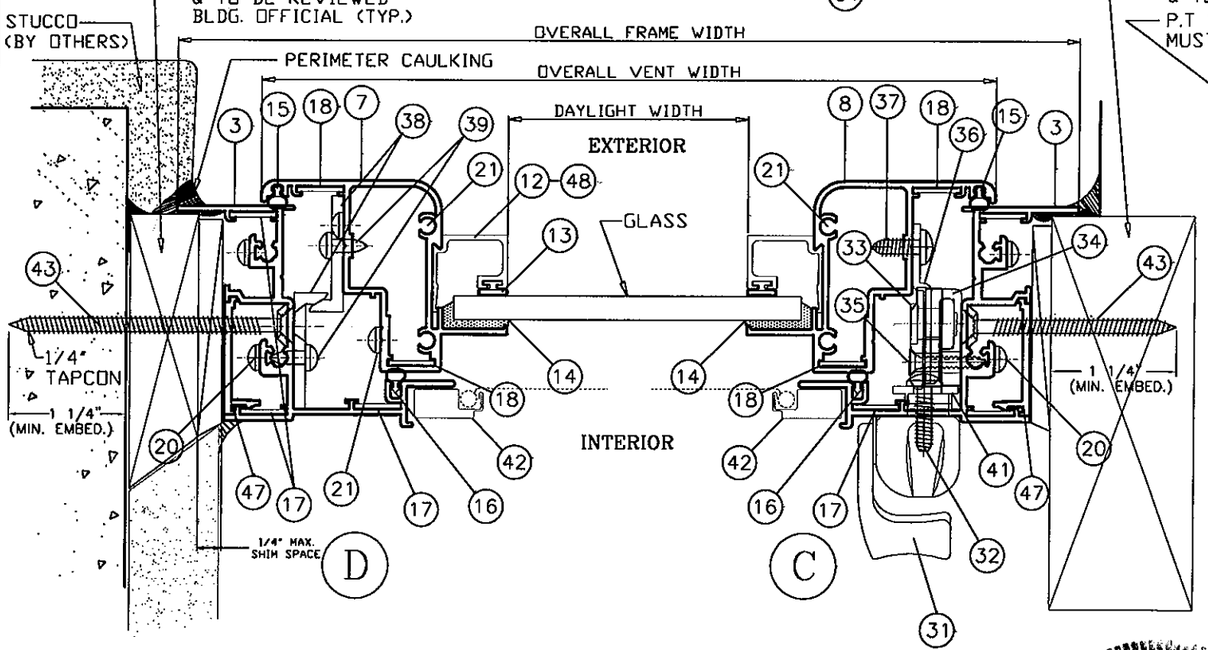

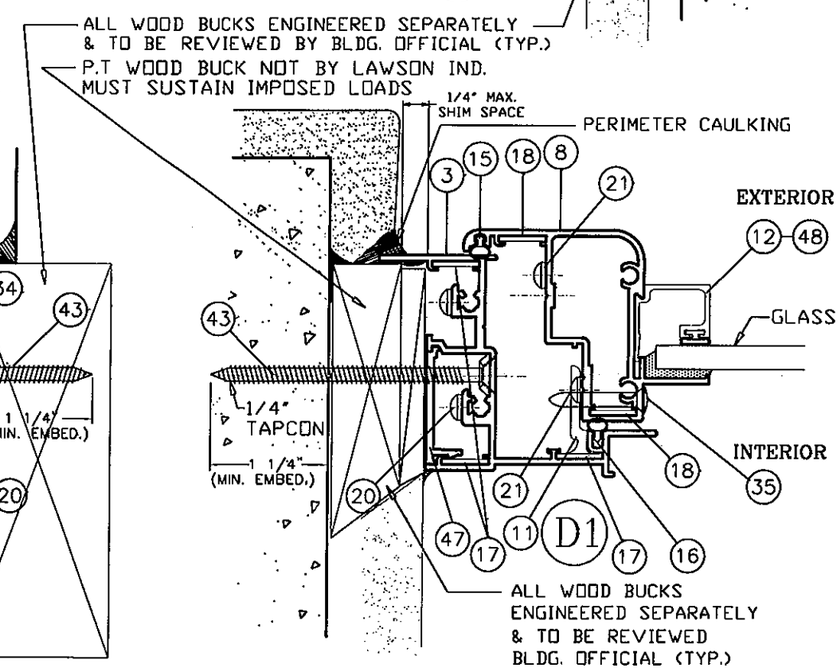

PRODUCT REVISED
as complying with the Florida
Building Code
Acceptance No 12-0127.20
Expiration Date JUNE 14, 2013
By Manuel Perez
Miami-Dade Product Control

ANCHORS NOTE:

ANCHORS TO BE #12 SMS OR WD. SCREWS INTO WOOD, OR 1/4" TAPCONS INTO CONCRETE, WITH A MINIMUM OF 1 1/4" PENETRATION INTO WOOD OR CONCRETE. (REFER TO LOAD TABLES FOR QUANTITIES REQUIRED)

* WHEN THE GAP BETWEEN THE WINDOW FRAME AND THE BUCK OR MASONRY IS LESS THAN 1/8", SHIMS ARE NOT REQUIRED.

THOMAS J. SOTOS
PROFESSIONAL ENGINEER
FL LIC. # 55225
No 55225
STATE OF FLORIDA
DATE

Revision Notes: A. Revised to Comply w/ 2010 FBC	
Drawn By: N. ERAZO	Date Drawn: 10/27/07
Revised By: N. ERAZO	Date Revised: 01/20/12
Revision Level: A	Scale:

LAWSON INDUSTRIES, INC.
MANUFACTURER OF QUALITY ALUMINUM WINDOWS AND GLASS DOORS

8501 N.W. 90 ST.
MEDLEY, FLORIDA 33166
PH No. (305) 696-8660

Draw Class:	Part Class:	Prod Category:	Series/Model:	Item Reference #:	Revision #:
NOA	ASSEMBLY	WINDOW	3000	LCNOA 07-01	

Series: 3000 Outswing Casement Window

HORIZONTAL CROSS-SECTIONS, NOTES & DETAILS

Product Reference Number:	Drawing Number:	Sheet:
CASEMENT3000-07NOA-01	L3000-0701.001	4 OF 10

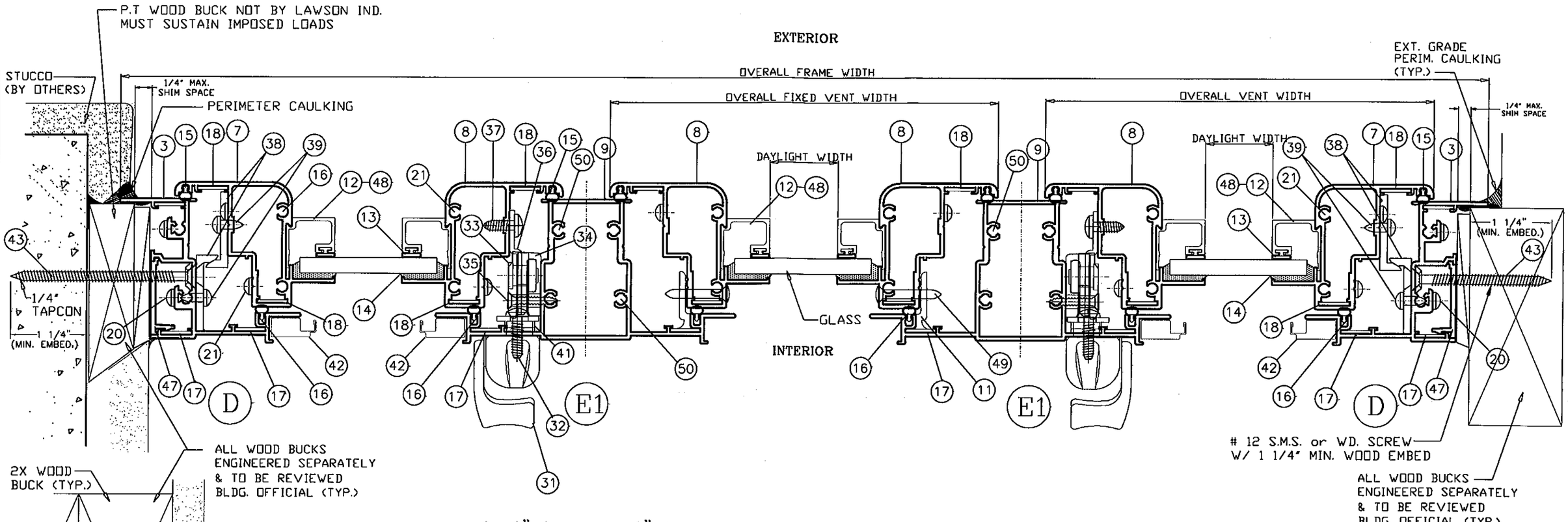

PRODUCT REVISED
as complying with the Florida
Building Code
Acceptance No 12-0127.20
Expiration Date JUNE 12, 2013
By Manuel Perez
Miami Dade Product Control

* WHEN THE GAP BETWEEN THE WINDOW FRAME AND THE BUCK OR MASONRY IS LESS THAN 1/8", SHIMS ARE NOT REQUIRED.

ANCHORS NOTE:

ANCHORS TO BE #12 SMS OR WD. SCREWS INTO WOOD, OR 1/4" TAPCONS INTO CONCRETE, WITH A MINIMUM OF 1 1/4" PENETRATION INTO WOOD OR CONCRETE.
(REFER TO LOAD TABLES FOR QUANTITIES REQUIRED)

THOMAS J. SOTOS
PROFESSIONAL ENGINEER
LICENSE
No 55225
STATE OF FLORIDA
PROFESSIONAL ENGINEER
DATE

Revision Notes: A. Revised to Comply w/ 2010 FBC	
Drawn By: N. ERAZO	Date Drawn: 10/27/07
Revised By: N. ERAZO	Date Revised: 01/20/12
Revision Level: A	Scale:

LAWSON INDUSTRIES, INC.
8501 N.W. 90 ST.
MEDLEY, FLORIDA 33166
PH No. (305) 696-8660
MANUFACTURER OF QUALITY ALUMINUM WINDOWS AND GLASS DOORS

Draw Class:	Part Class:	Prod Category:	Series/Model:	Item Reference #:	Revision #:
NOA	ASSEMBLY	WINDOW	3000	LCNOA 07-01	

Series: 3000 Outswing Casement Window
HORIZONTAL CROSS-SECTIONS, NOTES & DETAILS

Product Reference Number:	Drawing Number:	Sheet:
CASEMENT3000-07NOA-01	L3000-0701.001	5 OF 10

3000 Non Impact Casement Window
Flange Frame with 3/16" Annealed Glass
Configuration: "X"

Size Code	Width (in)	Height (in)	DP(+) psf	DP(-) psf	Anchors Head/Sill	Anchors Jamb
12	19.125	26	70.0	100.0	2	2
13	19.125	38.375	70.0	100.0	2	3
14	19.125	50.625	70.0	100.0	2	3
15	19.125	63	70.0	84.8	2	4
16	19.125	74.25	70.0	70.0	2	5
H32	26.5	26	70.0	100.0	2	2
H33	26.5	38.375	70.0	100.0	2	3
H34	26.5	50.625	70.0	80.7	2	3
H35	26.5	63	65.7	65.7	2	4
H36	26.5	74.25	53.6	53.6	2	5
22	37	26	70.0	100.0	2	2
23	37	38.375	70.0	74.7	2	3
24	37	50.625	53.0	53.0	2	3
25	37	63	40.5	40.5	2	4
26	37	74.25	33.2	33.2	2	5
2020	24	24	70.0	100.0	2	2
2030	24	36	70.0	100.0	2	3
2040	24	48	70.0	100.0	2	3
2050	24	60	70.0	75.2	2	4
2060	24	72	60.2	60.2	2	5
2620	30	24	70.0	100.0	2	2
2630	30	36	70.0	98.8	2	3
2640	30	48	69.6	69.6	2	3
2650	30	60	55.2	55.2	2	4
2660	30	72	48.8	48.8	2	5
2820	32	24	70.0	100.0	2	2
2830	32	36	70.0	92.1	2	3
2840	32	48	64.2	64.2	2	3
2850	32	60	49.3	49.3	2	4
2860	32	72	42.4	42.4	2	5
3020	36	24	70.0	100.0	2	2
3030	36	36	70.0	81.7	2	3
3040	36	48	58.1	58.1	2	3
3050	36	60	43.8	43.8	2	4
3060	36	72	35.5	35.5	2	5

3000 Non Impact Casement Window
Flange Frame with 3/16" Tempered Glass
Configuration: "X"

Size Code	Width (in)	Height (in)	DP(+) psf	DP(-) psf	Anchors Head/Sill	Anchors Jamb
12	19.125	26	70.0	100.0	2	2
13	19.125	38.375	70.0	100.0	2	3
14	19.125	50.625	70.0	100.0	2	3
15	19.125	63	70.0	100.0	2	4
16	19.125	74.25	70.0	100.0	2	5
H32	26.5	26	70.0	100.0	2	2
H33	26.5	38.375	70.0	100.0	2	3
H34	26.5	50.625	70.0	100.0	2	3
H35	26.5	63	70.0	100.0	2	4
H36	26.5	74.25	70.0	100.0	2	5
22	37	26	70.0	100.0	2	2
23	37	38.375	70.0	100.0	2	3
24	37	50.625	70.0	100.0	2	3
25	37	63	70.0	100.0	2	4
26	37	74.25	70.0	100.0	2	5
2020	24	24	70.0	100.0	2	2
2030	24	36	70.0	100.0	2	3
2040	24	48	70.0	100.0	2	3
2050	24	60	70.0	100.0	2	4
2060	24	72	70.0	100.0	2	5
2620	30	24	70.0	100.0	2	2
2630	30	36	70.0	100.0	2	3
2640	30	48	70.0	100.0	2	3
2650	30	60	70.0	100.0	2	4
2660	30	72	70.0	100.0	2	5
2820	32	24	70.0	100.0	2	2
2830	32	36	70.0	100.0	2	3
2840	32	48	70.0	100.0	2	3
2850	32	60	70.0	100.0	2	4
2860	32	72	70.0	100.0	2	5
3020	36	24	70.0	100.0	2	2
3030	36	36	70.0	100.0	2	3
3040	36	48	70.0	100.0	2	3
3050	36	60	70.0	100.0	2	4
3060	36	72	70.0	100.0	2	5

3000 Non Impact Casement Window
Flange Frame with 1/4" Annealed Glass
Configuration: "X"

Size Code	Width (in)	Height (in)	DP(+) psf	DP(-) psf	Anchors Head/Sill	Anchors Jamb
12	19.125	26	70.0	100.0	2	2
13	19.125	38.375	70.0	100.0	2	3
14	19.125	50.625	70.0	100.0	2	3
15	19.125	63	70.0	100.0	2	4
16	19.125	74.25	70.0	90.0	2	5
H32	26.5	26	70.0	100.0	2	2
H33	26.5	38.375	70.0	100.0	2	3
H34	26.5	50.625	70.0	100.0	2	3
H35	26.5	63	70.0	84.5	2	4
H36	26.5	74.25	68.9	68.9	2	5
22	37	26	70.0	100.0	2	2
23	37	38.375	70.0	97.1	3	3
24	37	50.625	70.0	70.0	2	3
25	37	63	53.6	53.6	2	4
26	37	74.25	46.0	46.0	2	5
2020	24	24	70.0	100.0	2	2
2030	24	36	70.0	100.0	2	3
2040	24	48	70.0	100.0	2	3
2050	24	60	70.0	96.7	2	4
2060	24	72	70.0	77.3	2	5
2620	30	24	70.0	100.0	2	2
2630	30	36	70.0	100.0	2	3
2640	30	48	70.0	97.3	2	3
2650	30	60	70.0	80.1	2	4
2660	30	72	65.1	65.1	2	5
2820	32	24	70.0	100.0	2	2
2830	32	36	70.0	100.0	2	3
2840	32	48	70.0	87.1	3	3
2850	32	60	70.0	71.2	2	4
2860	32	72	61.5	61.5	2	5
3020	36	24	70.0	100.0	2	2
3030	36	36	70.0	100.0	3	3
3040	36	48	70.0	76.4	3	3
3050	36	60	58.3	58.3	2	4
3060	36	72	49.3	49.3	2	5

3000 Non Impact Casement Window
Flange Frame with 1/2" Annealed Insulated Glass
Configuration: "X"

Size Code	Width (in)	Height (in)	DP(+) psf	DP(-) psf	Anchors Head/Sill	Anchors Jamb
12	19.125	26	70.0	100.0	2	2
13	19.125	38.375	70.0	100.0	2	3
14	19.125	50.625	70.0	100.0	2	3
15	19.125	63	70.0	100.0	2	4
16	19.125	74.25	70.0	92.3	2	5
H32	26.5	26	70.0	100.0	2	2
H33	26.5	38.375	70.0	100.0	2	3
H34	26.5	50.625	68.7	68.7	2	3
H35	26.5	63	54.1	54.1	2	4
H36	26.5	74.25	48.4	48.4	2	5
22	37	26	70.0	100.0	2	2
23	37	38.375	70.0	82.8	2	3
24	37	50.625	61.7	61.7	2	3
25	37	63	45.8	45.8	2	4
26	37	74.25	35.9	35.9	2	5
2020	24	24	70.0	100.0	2	2
2030	24	36	70.0	100.0	2	3
2040	24	48	70.0	81.8	2	3
2050	24	60	69.2	69.2	2	4
2060	24	72	63.5	63.5	2	5
2620	30	24	70.0	100.0	2	2
2630	30	36	70.0	100.0	2	3
2640	30	48	70.0	70.5	2	3
2650	30	60	49.8	49.8	2	4
2660	30	72	39.9	39.9	2	5
2820	32	24	70.0	100.0	2	2
2830	32	36	70.0	98.7	2	3
2840	32	48	69.5	69.5	2	3
2850	32	60	49.4	49.4	2	4
2860	32	72	37.4	37.4	2	5
3020	36	24	70.0	100.0	2	2
3030	36	36	70.0	90.4	2	3
3040	36	48	66.6	66.6	2	3
3050	36	60	49.4	49.4	2	4
3060	36	72	37.2	37.2	2	5

PRODUCT REVISED
as complying with the Florida
Building Code
Acceptance No 12-0127.20
Expiration Date JUNE 12, 2013
By Manuel Bera
Miami Dade Product Control

THOMAS J. SOTOS
PROFESSIONAL ENGINEER
FL LIC # 55225
No 55225
STATE OF FLORIDA
PROFESSIONAL ENGINEER

DATE JAN 2012

Revision Notes: A. Revised to Comply w/ 2010 FBC	
Drawn By: N. ERAZO	Date Drawn: 10/27/07
Revised By: N. ERAZO	Date Revised: 01/20/12
Revision Level: A	Scale:

LAWSON INDUSTRIES, INC.
8501 N.W. 90 ST.
MEDLEY, FLORIDA 33166
PH No. (305) 696-8660
MANUFACTURER OF QUALITY ALUMINUM WINDOWS AND GLASS DOORS

Draw Class:	Part Class:	Prod Category:	Series/Model:	Item Reference #:	Revision #:
NOA	DP CHART	WINDOW	3000	LCNOA 07-01	

Series: 3000 Outswing Casement Window
DESIGN LOAD TABLES FOR "X" WINDOWS

Product Reference Number: CASEMENT3000-07NOA-01
Drawing Number: L3000-0701.001
Sheet: 6 OF 10

3000 Non Impact Casement Window
Flange Frame with 3/16" Annealed Glass
Configuration: "XX", "XO" or "OX"

Size Code	Width (in)	Height (in)	DP(+) psf	DP(-) psf	Anchors Head/Sill	Anchors Jamb
22	37	26	70.0	100.0	4	2
23	37	38.375	70.0	100.0	4	3
24	37	50.625	70.0	100.0	4	4
25	37	63	70.0	87.8	4	4
32	53.125	26	70.0	100.0	6	2
33	53.125	38.375	70.0	100.0	6	3
34	53.125	50.625	70.0	77.7	6	4
35	53.125	63	66.1	66.1	6	4
D22	74	26	70.0	100.0	6	2
D23	74	38.375	70.0	73.9	6	3
D24	74	50.625	52.5	52.5	6	4
D25	74	63	40.2	40.2	6	4
4020	48	24	70.0	100.0	4	2
4030	48	36	70.0	100.0	4	3
4040	48	48	70.0	99.4	4	4
4050	48	60	70.0	75.8	4	4
5020	60	24	70.0	100.0	6	2
5030	60	36	70.0	97.1	6	3
5040	60	48	68.1	68.1	6	4
5050	60	60	53.4	53.4	6	4
6020	72	24	70.0	100.0	6	2
6030	72	36	70.0	80.6	6	3
6040	72	48	57.6	57.6	6	4
6050	72	60	43.3	43.3	6	4

3000 Non Impact Casement Window
Flange Frame with 1/4" Annealed Glass
Configuration: "XX", "XO" or "OX"

Size Code	Width (in)	Height (in)	DP(+) psf	DP(-) psf	Anchors Head/Sill	Anchors Jamb
22	37	26	70.0	100.0	4	2
23	37	38.375	70.0	100.0	4	3
24	37	50.625	70.0	100.0	4	4
25	37	63	70.0	100.0	4	4
32	53.125	26	70.0	100.0	6	2
33	53.125	38.375	70.0	100.0	6	3
34	53.125	50.625	70.0	100.0	6	4
35	53.125	63	70.0	84.8	6	4
D22	74	26	70.0	100.0	6	2
D23	74	38.375	70.0	96.0	6	3
D24	74	50.625	69.1	69.1	6	4
D25	74	63	52.7	52.7	6	4
4020	48	24	70.0	100.0	4	2
4030	48	36	70.0	100.0	4	3
4040	48	48	70.0	100.0	4	4
4050	48	60	70.0	97.2	4	4
5020	60	24	70.0	100.0	6	2
5030	60	36	70.0	100.0	6	3
5040	60	48	70.0	94.7	6	4
5050	60	60	70.0	77.8	6	4
6020	72	24	70.0	100.0	6	2
6030	72	36	70.0	100.0	6	3
6040	72	48	70.0	75.6	6	4
6050	72	60	57.4	57.4	6	4

3000 Non Impact Casement Window
Flange Frame with 3/16" Tempered Glass
Configuration: "XX", "XO" or "OX"

Size Code	Width (in)	Height (in)	DP(+) psf	DP(-) psf	Anchors Head/Sill	Anchors Jamb
22	37	26	70.0	100.0	4	2
23	37	38.375	70.0	100.0	4	3
24	37	50.625	70.0	100.0	4	4
25	37	63	70.0	100.0	4	4
32	53.125	26	70.0	100.0	6	2
33	53.125	38.375	70.0	100.0	6	3
34	53.125	50.625	70.0	100.0	6	4
35	53.125	63	70.0	100.0	6	4
D22	74	26	70.0	100.0	6	2
D23	74	38.375	70.0	100.0	6	3
D24	74	50.625	70.0	100.0	6	4
D25	74	63	70.0	83.1	6	4
4020	48	24	70.0	100.0	4	2
4030	48	36	70.0	100.0	4	3
4040	48	48	70.0	100.0	4	4
4050	48	60	70.0	100.0	4	4
5020	60	24	70.0	100.0	6	2
5030	60	36	70.0	100.0	6	3
5040	60	48	70.0	100.0	6	4
5050	60	60	70.0	100.0	6	4
6020	72	24	70.0	100.0	6	2
6030	72	36	70.0	100.0	6	3
6040	72	48	70.0	100.0	6	4
6050	72	60	70.0	90.5	6	4

3000 Non Impact Casement Window
Flange Frame with 1/2" Annealed Insulated Glass
Configuration: "XX", "XO" or "OX"

Size Code	Width (in)	Height (in)	DP(+) psf	DP(-) psf	Anchors Head/Sill	Anchors Jamb
22	37	26	70.0	100.0	4	2
23	37	38.375	70.0	100.0	4	3
24	37	50.625	70.0	91.6	4	4
25	37	63	70.0	70.5	4	4
32	53.125	26	70.0	100.0	6	2
33	53.125	38.375	70.0	99.4	6	3
34	53.125	50.625	67.8	67.8	6	4
35	53.125	63	52.1	52.1	6	4
D22	74	26	70.0	100.0	6	2
D23	74	38.375	70.0	81.9	6	3
D24	74	50.625	59.0	59.0	6	4
D25	74	63	42.6	42.6	6	4
4020	48	24	70.0	100.0	4	2
4030	48	36	70.0	100.0	4	3
4040	48	48	70.0	79.2	4	4
4050	48	60	60.9	60.9	4	4
5020	60	24	70.0	100.0	6	2
5030	60	36	70.0	100.0	6	3
5040	60	48	70.0	70.3	6	4
5050	60	60	49.4	49.4	6	4
6020	72	24	70.0	100.0	6	2
6030	72	36	70.0	89.2	6	3
6040	72	48	64.9	64.9	6	4
6050	72	60	46.4	46.4	6	4

PRODUCT REVISED
as complying with the Florida
Building Code
Acceptance No 12-0127.20
Expiration Date JUNE 12, 2013
By Manuel Perez
Miami-Dade Product Control

THOMAS J. SOTOS
PROFESSIONAL ENGINEER
FL. LIC. # 55225
No 55225
STATE OF FLORIDA
PROFESSIONAL ENGINEER
DATE JAN 24 2012

Revision Notes:
A. Revised to Comply w/ 2010 FBC

Drawn By: N. ERAZO	Date Drawn: 10/27/07
Revised By: N. ERAZO	Date Revised: 01/20/12
Revision Level: A	Scale:

LAWSON INDUSTRIES, INC.
8501 N.W. 90 ST.
MEDLEY, FLORIDA 33166
PH No. (305) 696-8660
MANUFACTURER OF QUALITY ALUMINUM WINDOWS AND GLASS DOORS

Draw Class:	Part Class:	Prod Category:	Series/Model:	Item Reference #:	Revision #:
NOA	DP CHART	WINDOW	3000	LCNOA 07-01	

Series: 3000 Outswing Casement Window
DESIGN LOAD TABLES FOR "XX", "XO" OR "OX WINDOWS

Product Reference Number:	Drawing Number:	Sheet:
CASEMENT3000-07NOA-01	L3000-0701.001	7 OF 10

3000 Non Impact Casement Window
Flange Frame with 3/16" Annealed Glass
Configuration: "XOX"

Size Code	Width (in)	Height (in)	DP(+) psf	DP(-) psf	Anchors Head/Sill	Anchors Jamb
D22	74	26	70.0	100.0	8	2
D23	74	38.375	70.0	73.1	8	3
D24	74	50.625	52.1	52.1	8	4
D25	74	63	39.9	39.9	8	4
D32	106.375	26	70.0	80.1	10	2
D33	106.375	38.375	48.1	48.1	10	3
D34	106.375	50.625	41.0	41.0	10	4
D35	106.375	63	34.2	34.2	10	4
T22	111	26	70.0	78.2	12	2
T23	111	38.375	45.7	45.7	12	3
T24	111	50.625	39.7	39.7	12	4
T25	111	63	33.1	33.1	12	4
M2	120	26	70.0	75.0	12	2
M3	120	38.375	41.1	41.1	12	3
M4	120	50.625	37.2	37.2	12	4
M5	120	63	31.0	31.0	12	4
6020	72	24	70.0	100.0	8	2
6030	72	36	70.0	79.5	8	3
6040	72	48	57.0	57.0	8	4
6050	72	60	42.8	42.8	8	4
7020	84	24	70.0	100.0	10	2
7030	84	36	66.9	66.9	10	3
7040	84	48	51.4	51.4	10	4
7050	84	60	40.3	40.3	10	4
8020	96	24	70.0	100.0	10	2
8030	96	36	56.6	56.6	10	3
8040	96	48	47.2	47.2	10	4
8050	96	60	38.5	38.5	10	4
9020	108	24	70.0	96.0	10	2
9030	108	36	49.1	49.1	10	3
9040	108	48	41.8	41.8	10	4
9050	108	60	35.5	35.5	10	4

3000 Non Impact Casement Window
Flange Frame with 1/4" Annealed Glass
Configuration: "XOX"

Size Code	Width (in)	Height (in)	DP(+) psf	DP(-) psf	Anchors Head/Sill	Anchors Jamb
D22	74	26	70.0	100.0	8	2
D23	74	38.375	70.0	94.8	8	3
D24	74	50.625	68.2	68.2	8	4
D25	74	63	52.0	52.0	8	4
D32	106.375	26	70.0	100.0	10	2
D33	106.375	38.375	61.6	61.6	10	3
D34	106.375	50.625	50.2	50.2	10	4
D35	106.375	63	41.3	41.3	10	4
T22	111	26	70.0	100.0	12	2
T23	111	38.375	58.6	58.6	12	3
T24	111	50.625	48.3	48.3	12	4
T25	111	63	40.4	40.4	12	4
M2	120	26	70.0	100.0	12	2
M3	120	38.375	53.4	53.4	12	3
M4	120	50.625	44.9	44.9	12	4
M5	120	63	38.6	38.6	12	4
6020	72	24	70.0	100.0	8	2
6030	72	36	70.0	100.0	8	3
6040	72	48	70.0	74.7	8	4
6050	72	60	56.5	56.5	8	4
7020	84	24	70.0	100.0	10	2
7030	84	36	70.0	87.1	10	3
7040	84	48	64.2	64.2	10	4
7050	84	60	49.9	49.9	10	4
8020	96	24	70.0	100.0	10	2
8030	96	36	70.0	74.6	10	3
8040	96	48	57.8	57.8	10	4
8050	96	60	46.5	46.5	10	4
9020	108	24	70.0	100.0	10	2
9030	108	36	63.9	63.9	10	3
9040	108	48	51.0	51.0	10	4
9050	108	60	42.9	42.9	10	4

3000 Non Impact Casement Window
Flange Frame with 3/16" Tempered Glass
Configuration: "XOX"

Size Code	Width (in)	Height (in)	DP(+) psf	DP(-) psf	Anchors Head/Sill	Anchors Jamb
D22	74	26	70.0	100.0	8	2
D23	74	38.375	70.0	100.0	8	3
D24	74	50.625	70.0	100.0	8	4
D25	74	63	70.0	100.0	8	4
D32	106.375	26	70.0	100.0	10	2
D33	106.375	38.375	70.0	100.0	10	3
D34	106.375	50.625	70.0	100.0	10	4
D35	106.375	63	70.0	84.0	10	4
T22	111	26	70.0	100.0	12	2
T23	111	38.375	70.0	100.0	12	3
T24	111	50.625	70.0	100.0	12	4
T25	111	63	70.0	82.4	12	4
M2	120	26	70.0	100.0	12	2
M3	120	38.375	70.0	100.0	12	3
M4	120	50.625	70.0	100.0	12	4
M5	120	63	70.0	80.0	12	4
6020	72	24	70.0	100.0	8	2
6030	72	36	70.0	100.0	8	3
6040	72	48	70.0	100.0	8	4
6050	72	60	70.0	100.0	8	4
7020	84	24	70.0	100.0	10	2
7030	84	36	70.0	100.0	10	3
7040	84	48	70.0	100.0	10	4
7050	84	60	70.0	100.0	10	4
8020	96	24	70.0	100.0	10	2
8030	96	36	70.0	100.0	10	3
8040	96	48	70.0	100.0	10	4
8050	96	60	70.0	95.0	10	4
9020	108	24	70.0	100.0	10	2
9030	108	36	70.0	100.0	10	3
9040	108	48	70.0	100.0	10	4
9050	108	60	70.0	90.1	10	4

3000 Non Impact Casement Window
Flange Frame with 1/2" Annealed Insulated Glass
Configuration: "XOX"

Size Code	Width (in)	Height (in)	DP(+) psf	DP(-) psf	Anchors Head/Sill	Anchors Jamb
D22	74	26	70.0	100.0	8	2
D23	74	38.375	70.0	81.0	8	3
D24	74	50.625	60.5	60.5	8	4
D25	74	63	45.8	45.8	8	4
D32	106.375	26	64.4	64.4	10	2
D33	106.375	38.375	55.5	55.5	10	3
D34	106.375	50.625	43.7	43.7	10	4
D35	106.375	63	35.2	35.2	10	4
T22	111	26	61.8	61.8	12	2
T23	111	38.375	52.6	52.6	12	3
T24	111	50.625	41.9	41.9	12	4
T25	111	63	33.8	33.8	12	4
M2	120	26	57.3	57.3	12	2
M3	120	38.375	47.7	47.7	12	3
M4	120	50.625	38.7	38.7	12	4
M5	120	63	31.2	31.2	12	4
6020	72	24	70.0	100.0	8	2
6030	72	36	70.0	87.9	8	3
6040	72	48	65.5	65.5	8	4
6050	72	60	49.4	49.4	8	4
7020	84	24	70.0	91.6	10	2
7030	84	36	70.0	75.0	10	3
7040	84	48	57.6	57.6	10	4
7050	84	60	45.9	45.9	10	4
8020	96	24	70.0	79.9	10	2
8030	96	36	65.1	65.1	10	3
8040	96	48	50.9	50.9	10	4
8050	96	60	40.9	40.9	10	4
9020	108	24	70.0	72.8	10	2
9030	108	36	55.4	55.4	10	3
9040	108	48	45.3	45.3	10	4
9050	108	60	36.2	36.2	10	4

PRODUCT REVISED
as complying with the Florida
Building Code
Acceptance No 12-0127.2D
Expiration Date JUNE 12, 2013
By Manuel Perez
Miami Dade Product Control

THOMAS J. SOTO
PROFESSIONAL ENGINEER
No 55225
STATE OF FLORIDA
DATE JAN 24 2012

Revision Notes:	LAWSON INDUSTRIES, INC. 8501 N.W. 90 ST. MEDLEY, FLORIDA 33166 PH No. (305) 696-8660 MANUFACTURER OF QUALITY ALUMINUM WINDOWS AND GLASS DOORS				
	Draw Class: NOA	Part Class: DP CHART	Prod Category: WINDOW	Series/Model: 3000	Item Reference #: LCNOA 07-01 / Revision #:
Drawn By: N. ERAZO	Date Drawn: 10/27/07	Series: 3000 Outswing Casement Window			
Revised By:	Date Revised:	DESIGN LOAD TABLES FOR "XOX", "XO" UN-EQUAL & "XOX" EQUAL			
Revision Level:	Scale:	Product Reference Number: CASEMENT3000-07NOA-01	Drawing Number: L3000-0701.001	Sheet: 8 OF 10	

LAWSON SERIES: 3000 CASEMENT (NON-IMPACT) WINDOW - BILL OF MATERIALS LIST

ITEM #	DWG. NO.	PART NO.	PART NO.	QUANTITY	DESCRIPTION	REMARKS
1	L-3001		-	1	FRAME HEAD	6063-T6 ALUMINUM
2	L-3002		-	1	FRAME SILL	6063-T6 ALUMINUM
3	L-3002		-	2	FRAME JAMB-HINGE SIDE	6063-T6 ALUMINUM
4	L-3002		-	2	FRAME JAMB-LATCH SIDE	6063-T6 ALUMINUM
5	L-3004		-	1 X VENT/LITE	VENT TOP RAIL	6063-T6 ALUMINUM
6	L-3004		-	1 X VENT/LITE	VENT BOTTOM RAIL	6063-T6 ALUMINUM
7	L-3004		-	1 X VENT/LITE	VENT SIDE RAIL-HINGE SIDE	6063-T6 ALUMINUM
8	L-3004		-	1 X VENT/LITE	VENT SIDE RAIL-LATCH SIDE	6063-T6 ALUMINUM
9	L-3003		-	AS REQ'D.	IN-POST	6063-T6 ALUMINUM
10	L-3006		-	1 X ANCHOR	FRAME SILL ANCHOR CLIP	6063-T6 ALUMINUM (3" L.)
11	L-3005		-	AS REQ'D.	FIXED LITE MOUNTING BRACKET	6063-T6 ALUMINUM (3" L.)
12	L-3010		-	AS REQD.	GLAZING BEAD - 3/16" & 1/4"	6063-T5 ALUMINUM
13	L-7531		-	AS REQD.	GLAZING BEAD BULB VINYL	PVC VINYL
14	SM-5731		-	AS REQD.	GLAZING SEALANT - SILICONE	
15	L-3012		-	AS REQD.	OUTER WEATHERSTRIPPING - VENT	PVC VINYL
16	L-3012		-	AS REQD.	INNER WEATHERSTRIPPING - FRAME	PVC VINYL
17	L-3013	PJS40-SS	-	12	CORNER KEY PER FRAME	
18	L-3013	PJS40-SS	-	8	CORNER KEY PER VENT	
19	L-3013	PJS40-SS	-	4 X POST	CORNER KEY PER IN-POST	
20	-	-	-	8	FRAME ASSEMBLY SCREWS	#10 X 1" PH SMS
21	-	-	-	8	VENT ASSEMBLY SCREWS	#10 X 1 1/4" PH SMS
22	-	-	-	2 X VENT	4 BAR 90° HINGES - STD. & H.D.	
23	222SS	301SS	304CJ200	2 X VENT	4 BAR 45° HINGES - STD. & H.D.	
24	-	-	-	AS REQD.	HINGE MOUNTING SCREWS	#10 X 1/2" P.H./PHIL. B
25	536 SERIES	132626	132818	1 X VENT	VENT OPERATOR - DUAL or SINGLE	

LAWSON SERIES: 3000 CASEMENT (NON-IMPACT) WINDOW - BILL OF MATERIALS LIST

ITEM #	DWG. NO.	PART NO.	PART NO.	QUANTITY	DESCRIPTION	REMARKS
26	-	-	-	4/ OPER.	OPERATOR MOUNTING SCREWS	#10 X 3/4" F.H./PHIL. SDS
27	-	30175	C0314	1/ OPER.	STAINLESS STEEL "C" TRACK	TRUTH- ULTRA-
28	-	-	-	2/ TRACK	TRACK MOUNTING SCREWS	#8 X 1/2" F.H./PHIL. SDS
29	-	10558	10899	1/ OPERATOR	STUD BRACKET CONNECTOR	TRUTH- ULTRA-
30	-	-	-	2/ BRACKET	STUD BRACKET SCREWS	#8 X 1/2" F.H./PHIL. SDS
31	-	132-056S	132-506	1/ VENT	LOCKING HANDLE	ULTRA
32	-	-	-	2/ LOCK	LOCK HANDLE MOUNTING SCREWS	#10-32 X 3/8" PH MS
33	-	119 SERIES	032 SERIES	1/ VENT	LOCKING MULTI-POINT BAR	TRUTH- ULTRA- SULLIVAN
34	-	03144	20320	1 X LOCK POINT	TIE BAR NYLON GUIDES	ULTRA - SULLIVAN
35	-	-	-	2 X GUIDE	NYLON GUIDES MOUNTING SCREWS	#8 X 1" PH./PHIL. B
36	-	C0885 RH	C0886 LH	1/ LOCK	KEEPER (ST. STEEL)	ULTRA
37	-	-	-	2/ KEEPER	KEEPER MOUNTING SCREWS	#6 X 3/8" PH SMS
38	L-3014	-	-	4	SNUBBER	6063-T5 ALUMINUM
39	-	-	-	2/ SNUBBER	SNUBBER INSTALLATION SCREWS	#8 X 1/2" PH SMS
40	-	-	-	2 X VENT	ANTI SAG VENT SILL RAMP	NYLON 6/6
41	-	23050	C0483	1 X HANDLE	LOCKING HANDLE BACK PLATE	TRUTH- ULTRA-
42	-	-	-	1 X VENT	5/16" INSECT SCREEN - OPTIONAL	ALUMINUM FRAME
43	-	-	-	SEE ELEVATION	FRAME INSTALLATION SCREWS	#12 X 2 1/4" PH SMS
44	-	-	-	SEE ELEVATION	FRAME SILL CLIP SCREWS	#12 X 1 1/2" PH SMS
45	-	SM-5504	-	SEE ELEVATION	FRAME/VENT ASSEMBLY SEALANT	Schnee-Morehead
46	-	-	-	SEE ELEVATION	FRAME INSTALLATION CAULKING	EXTERIOR GRADE PERIMETER
47	L-3007	LII-164	-	1 X ANCHOR	FRAME HEAD/JAMB SHEAR PLATE	6063-T5 ALUMINUM (3" L.)
48	L-3010	-		AS REQD.	GLAZING BEAD - 1/2"	6063-T5 ALUMINUM
49	-	-	-	2 X BRACKET	FIXED VENT ATTACHMENT SCREW	#8 x 1 1/4" FH./PHIL. SDS
50	-	-	-	8 X POST	IN-POST ASSEMBLY SCREWS	#10 X 1 1/4" PH SMS

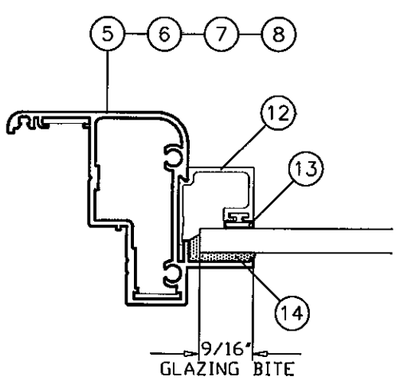

MONOLITHIC GLAZING DETAIL

3/16" & 1/4" Monolithic

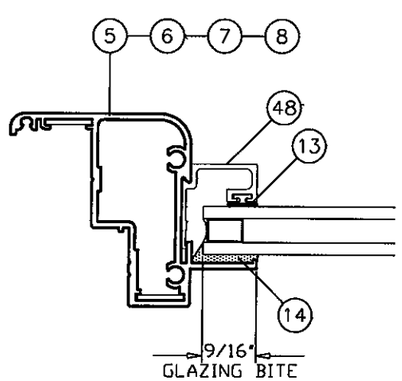

INSULATED GLAZING DETAIL

1/2" Insulated

PRODUCT REVISED
as complying with the Florida
Building Code
Acceptance No 12-0127.20
Expiration Date JUNE 12, 2013
By Manuel Perez
Miami Dade Product Control

THOMAS J. SOTOS, P.E.
PROFESSIONAL ENGINEER
F.I.C. # 55225
LICENSE No 55225
STATE OF FLORIDA
PROFESSIONAL ENGINEER

DATE JAN. 2012

Revision Notes:
A. Revised to Comply w/ 2010 FBC

Drawn By: N. ERAZO	Date Drawn: 10/27/07	Draw Class: NOA	Part Class: B.O.M.
Revised By: N. ERAZO	Date Revised: 01/20/12	Prod Category: WINDOW	Series/Model: 3000
Revision Level: A	Scale:	Item Reference #: LCNOA 07-01	Revision #:

LAWSON INDUSTRIES, INC.

8501 N.W. 90 ST.
MEDLEY, FLORIDA 33166
PH No. (305) 696-8660

MANUFACTURER OF QUALITY ALUMINUM WINDOWS AND GLASS DOORS

Series: 3000 Outswing Casement Window

BILL OF MATERIALS & GLAZING DETAILS

Product Reference Number: CASEMENT3000-07NOA-01

Drawing Number: L3000-0701.001

Sheet: 9 OF 10

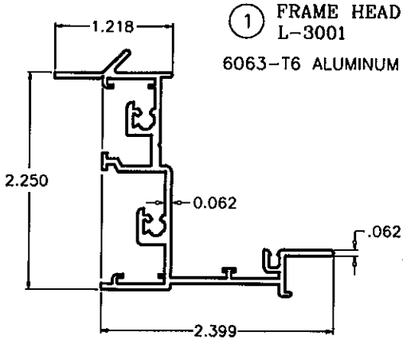

(1) FRAME HEAD
L-3001
6063-T6 ALUMINUM

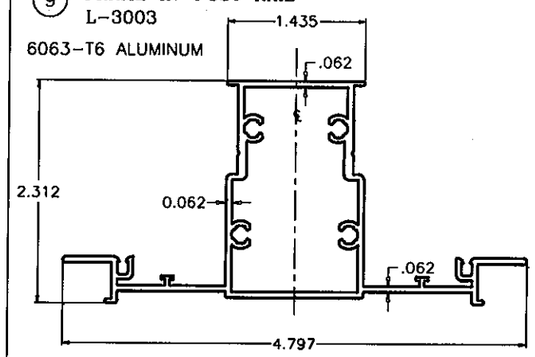

(9) FRAME IN-POST RAIL
L-3003
6063-T6 ALUMINUM

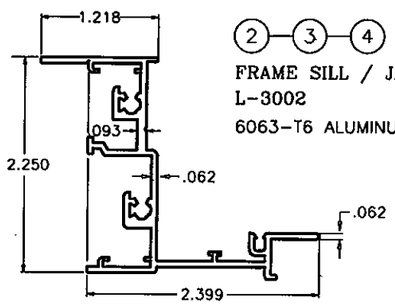

(2)-(3)-(4)
FRAME SILL / JAMB
L-3002
6063-T6 ALUMINUM

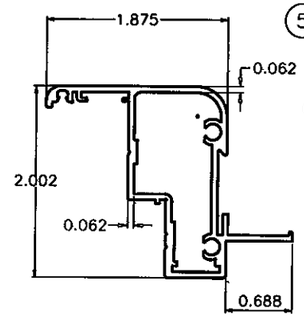

(5)-(6)-(7)-(8)
VENT RAIL
L-3004
6063-T6 ALUMINUM

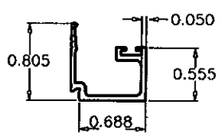

(12) GLAZING BEAD
3/16" & 1/4" Monolithic
L-3010
6063-T5 ALUMINUM

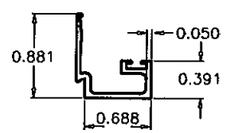

(48) GLAZING BEAD
1/2" Insulated
L-3011
6063-T5 ALUMINUM

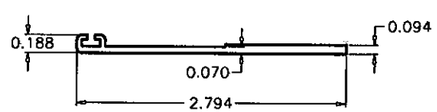

(10) FRAME SILL ANCHOR CLIP
L-3006
6063-T6 ALUMINUM

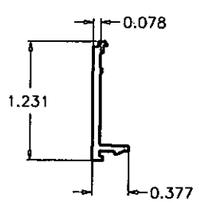

(47) FRAME SHEAR PLATE
L-3007
6063-T5 ALUMINUM

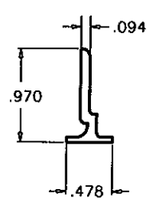

(11) FIXED LITE MOUNTING BRACKET
L-3005
6063-T6 ALUMINUM

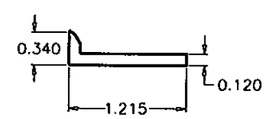

(38) ALUMINUM SNUBBER
L-3014
6063-T5 ALUMINUM

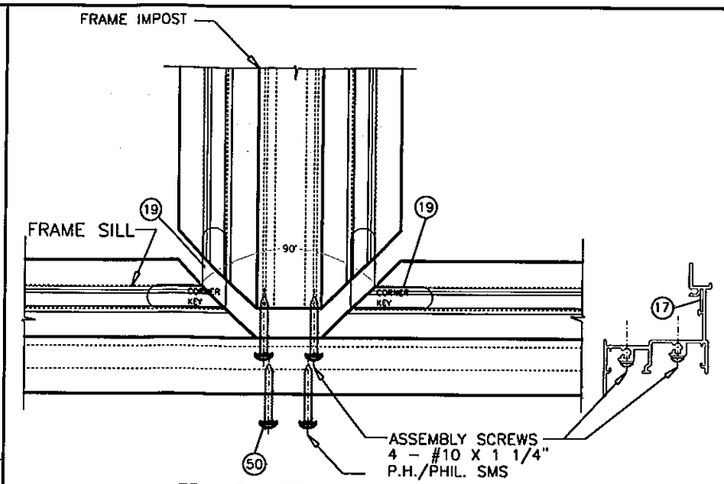

FRAME IMPOST DETAIL

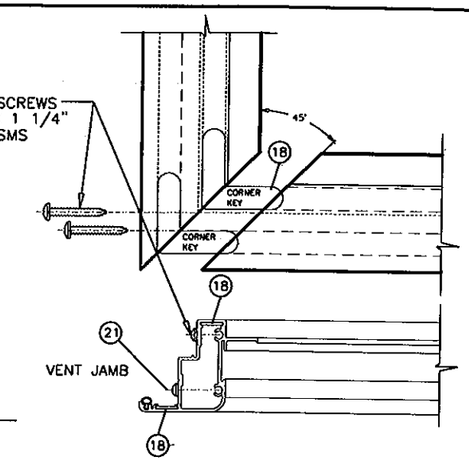

VENT RAIL CORNER DETAIL

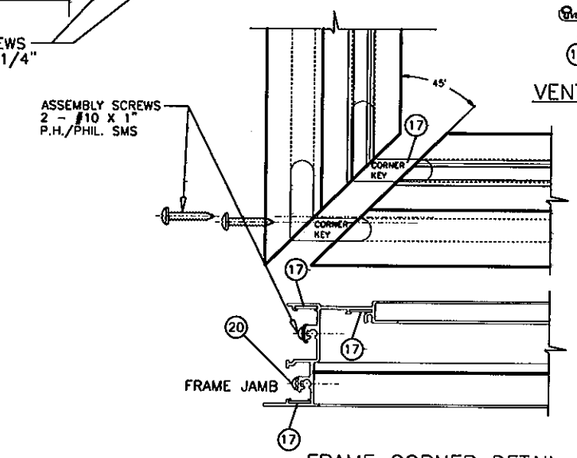

FRAME CORNER DETAIL

FRAME & SASH CORNER ASSEMBLY DETAILS

PRODUCT REVISED
as complying with the Florida
Building Code
Acceptance No 12-0127.20
Expiration Date JUNE 12, 2013
By Manuel Perez
Miami Dade Product Control

THOMAS J. SOTOS
PROFESSIONAL ENGINEER
FL. LIC. # 55225
No 55225
STATE OF FLORIDA
PROFESSIONAL ENGINEER

DATE_____

Revision Notes: A. Revised to Comply w/ 2010 FBC	
Drawn By: N. ERAZO	Date Drawn: 10/27/07
Revised By: N. ERAZO	Date Revised: 01/20/12
Revision Level: A	Scale:

LAWSON INDUSTRIES, INC.
8501 N.W. 90 ST.
MEDLEY, FLORIDA 33166
PH No. (305) 696-8660
MANUFACTURER OF QUALITY ALUMINUM WINDOWS AND GLASS DOORS

Draw Class:	Part Class:	Prod Category:	Series/Model:	Item Reference #:	Revision #:
NOA		WINDOW	3000	LCNOA 07-01	

Series: 3000 Outswing Casement Window
EXTRUSION CROSS-SECTIONS, & ASSEMBLY DETAILS

Product Reference Number:	Drawing Number:	Sheet:
CASEMENT3000-07NOA-01	L3000-0701.001	10 OF 10