MIAMI-DADE COUNTY
DEPARTMENT OF PERMITTING, ENVIRONMENT, AND REGULATORY AFFAIRS (PERA)
BOARD AND CODE ADMINISTRATION DIVISION

NOTICE OF ACCEPTANCE (NOA)

MIAMI-DADE COUNTY
PRODUCT CONTROL SECTION
11805 SW 26 Street, Room 208
Miami, Florida 33175-2474
T (786) 315-2590 F (786) 315-2599
www.miamidade.gov/pera/

WinDoor, Incorporated
7500 Amsterdam drive
Orlando, Florida, 32832

SCOPE:

This NOA is being issued under the applicable rules and regulations governing the use of construction materials. The documentation submitted has been reviewed and accepted by Miami-Dade County PERA -Product Control Section to be used in Miami Dade County and other areas where allowed by the Authority Having Jurisdiction (AHJ).

This NOA shall not be valid after the expiration date stated below. The Miami-Dade County Product Control Section (In Miami Dade County) and/or the AHJ (in areas other than Miami Dade County) reserve the right to have this product or material tested for quality assurance purposes. If this product or material fails to perform in the accepted manner, the manufacturer will incur the expense of such testing and the AHJ may immediately revoke, modify, or suspend the use of such product or material within their jurisdiction. PERA reserves the right to revoke this acceptance, if it is determined by Miami-Dade County Product Control Section that this product or material fails to meet the requirements of the applicable building code.
This product is approved as described herein, and has been designed to comply with the Florida Building Code, including the High Velocity Hurricane Zone.

DESCRIPTION: Series "8000" Aluminum Sliding Glass Door W/ Reinforcements, multi-tracks & pockets

APPROVAL DOCUMENT: Drawing No. **WIND0082,** titled "Series 8000 SGD 4'x10'LM", sheets 1 through 22 of 22, prepared by manufacturer, dated 09/13/04 and last revised on 02/01/10, signed and sealed by Luis R. Lomas, P.E., bearing the Miami-Dade County Product Control Revision stamp with the Notice of Acceptance number and expiration date by the Miami-Dade County Product Control Section.

MISSILE IMPACT RATING: Large and Small Missile Impact Resistant

Limitations:

1. Reinforcement item #31 shall be aluminum **6061-T6.**
2. Pocket hook installation condition (sheet 15) is limited to Concrete substrate with min 3192 psi compressive strength with ¼"CS ITW anchors with min 1-3/4" embedment. General installation note 3, in sheet 6 is not applicable to pocket hook.

LABELING: Each unit shall bear a permanent label with the manufacturer's name or logo, city, state and series and following statement: "Miami-Dade County Product Control Approved", unless otherwise noted herein.

RENEWAL of this NOA shall be considered after a renewal application has been filed and there has been no change in the applicable building code negatively affecting the performance of this product.

TERMINATION of this NOA will occur after the expiration date or if there has been a revision or change in the materials, use, and/or manufacture of the product or process. Misuse of this NOA as an endorsement of any product, for sales, advertising or any other purposes shall automatically terminate this NOA. Failure to comply with any section of this NOA shall be cause for termination and removal of NOA.

ADVERTISEMENT: The NOA number preceded by the words Miami-Dade County, Florida, and followed by the expiration date may be displayed in advertising literature. If any portion of the NOA is displayed, then it shall be done in its entirety.

INSPECTION: A copy of this entire NOA shall be provided to the user by the manufacturer or its distributors and shall be available for inspection at the job site at the request of the Building Official.
This NOA **revises NOA # 08-1010.06** and consists of this page 1 and evidence pages E-1, as well as approval document mentioned above.
The submitted documentation was reviewed by **Ishaq I. Chanda, P.E.**

MIAMI-DADE COUNTY APPROVED

4/13/12

NOTICE OF ACCEPTANCE: EVIDENCE SUBMITTED

A. DRAWINGS

1. Manufacturer's die drawings and sections (transferred from file # **08-1010.06**)
2. Drawing No. **WIND0082,** titled "Series 8000 SGD 4'x10'LM", sheets 1 through 22 of 22, prepared by manufacturer, dated 09/13/04 and last revised on 02/01/10, signed and sealed by Luis R. Lomas, P.E.

Note: This revision consists of FBC 2010 update only.

B. TESTS (transferred from file # **08-1010.06**)

1. Test reports on: 1) Air Infiltration Test, per FBC, TAS 202-94
   2) Uniform Static Air Pressure Test, Loading per FBC TAS 202-94
   3) Water Resistance Test, per FBC, TAS 202-94
   4) Large Missile Impact Test per FBC, TAS 201-94
   5) Cyclic Wind Pressure Loading per FBC, TAS 203-94
   6) Forced Entry Test, per FBC 2411 3.2.1, TAS 202-94

Along with marked-up drawings and installation diagram of Aluminum Sliding Glass, prepared by National Certified Testing Laboratories Inc, Test Report No. **NCTL-210-3016-1,** dated 08/12/04, signed & sealed by Gerald J, Ferrara, P.E.
(This test report has been revised by an addendum letter dated May 26, 2009, issued by National Certified Testing Laboratories Inc, signed & sealed by Gerald J, Ferrara, P.E.)

C. CALCULATIONS

1. Statement letter of conformance to FBC 2010, dated January 19, 2012, prepared, signed and sealed by Luis R. Lomas, P.E.
2. Anchor verification calculations complying w/ FBC-2007, dated 09-22-08, 02/09/09, 12/01/09 and last revised on 02-02-10, prepared, signed and sealed by Luis R. Lomas, P.E. (transferred from file # **08-1010.06**).
3. Glazing complies with ASTME-1300-02 &-04

D. QUALITY ASSURANCE

1. Miami Dade Department of Permitting, Environment, and Regulatory Affairs (PERA).

E. MATERIAL CERTIFICATIONS

1. Notice of Acceptance No. **11-0624.02** issued to E.I. DuPont DeNemours & Co., Inc. for their "**DuPont Sentry Glass ® Plus**", expiring on 01/14/17.
2. Notice of Acceptance No. **08-1224.04** issued to Solutia, for "Saflex Composite glass interlayer w/ PET core", expiring on 12/11/2013.

F. STATEMENTS

1. Statement letter of conformance to FBC 2010 and "No financial interest", dated 01/19/12, prepared, signed and sealed by Luis R. Lomas, P.E.
2. Statement letters of conformance to FBC 2007 and "No financial interest", both dated Sep. 22, 2008, signed and sealed by Luis R. Lomas, P.E. (transferred from file # **08-1010.06**)
3. Statement letter dated 11/24/2008, issued by Windoor, acknowledging use of proper Vanciva & SGP laminate thickness for LMI use, signed by Russell T. Traficante.
4. Lab compliance statement, as part of above referenced test report.

G. OTHER

1. This NOA **revises** NOA # **08-1010.06**, expiring on March 17, 2015.

Ishaq I. Chanda

Ishaq I. Chanda, P.E.
Product Control Examiner
NOA No 12-0130.03
Expiration Date: March 17, 2015
Approval Date: April 12, 2012

GENERAL NOTES:

1) THE PRODUCT SHOWN HEREIN IS DESIGNED AND MANUFACTURED TO COMPLY WITH REQUIREMENTS OF THE FLORIDA BUILDING CODE.
2) WOOD BUCK, STEEL OR WOOD FRAMING TO BE DESIGNED AND ANCHORED TO PROPERLY TRANSFER ALL LOADS TO STRUCTURE, BUCK OR FRAMING IS RESPONSIBILITY OF ARCHITECT OF RECORD. TO BE REVIEWED BY BUILDING OFFICIAL.
3) PRODUCTS ARE APPROVED FOR USE WHERE LARGE MISSILE IMPACT RESISTANCE IS REQUIRED. IMPACT PROTECTIVE SYSTEM IS NOT REQUIRED.
4) SEE APPROVED CONFIGURATION & DESIGN PRESSURE TABLE ON THIS SHEET.

8000 OXXX REINFORCED SLIDING GLASS DOOR
"DI" PANEL (FIXED) = 49 7/8" X 118 5/16"
"AI" PANEL (ACTIVE) = 50" X 118 5/16"
"CI" PANEL (ACTIVE) = 49 1/2" X 118 5/16"
"AOR" PANEL (ACTIVE) = 49 1/8" X 118 5/16"

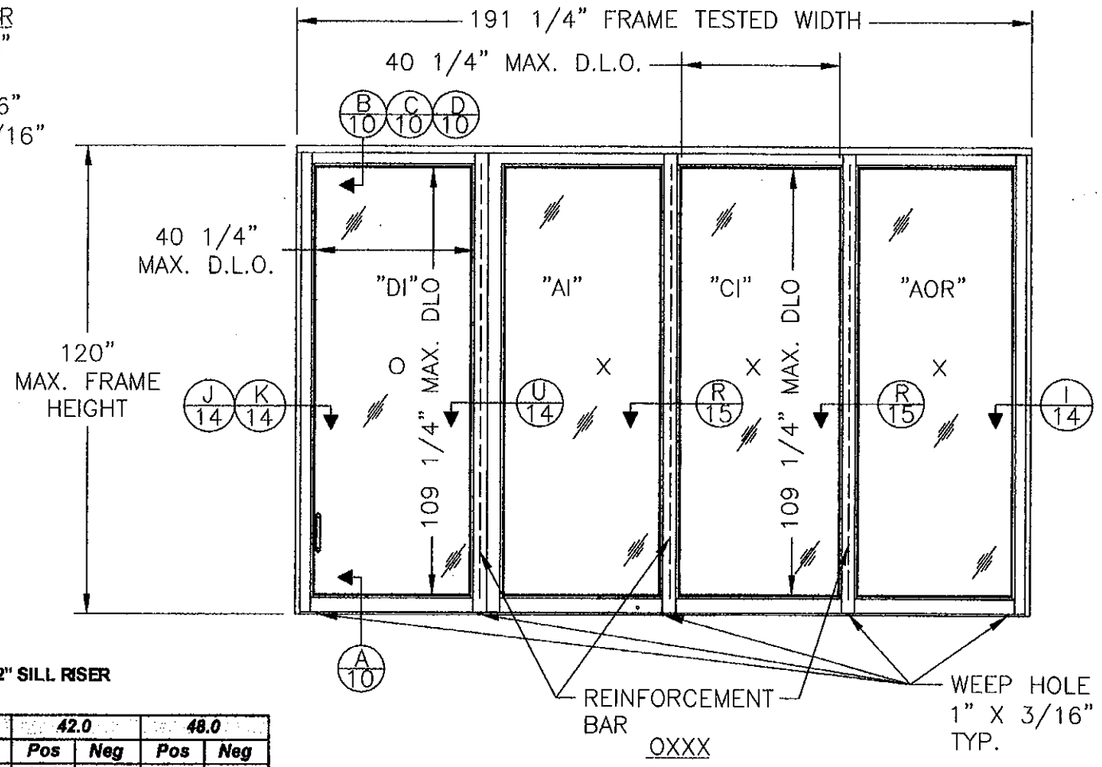

OXXX

APPROVED CONFIGURATION TABLE	
2 TRACK	XO, OX, XX, OXO, OXXO, XXXX, PX, XP, PXX, PXXP, PXXXP
3 TRACK	XXX, XXO, OXX, OXXX, XXXO, XXXXXX, OXXXXO, PXXX, XXXP, PXXXXXP
4 TRACK	XXXX, XXXO, OXXX, XXXXXXX, OXXXXXXO, PXXXX, XXXXP, PXXXXXXXP
ALL APPROVED CONFIGURATIONS CAN ALSO BE DONE IN 90° & 135° CONFIGURATIONS	

DESIGN PRESSURE CHART WITH 2 1/4" SILL RISER

Single Panel width (in)

Frame Height (in)	24.0		30.0		36.0		42.0		48.0	
	Pos	Neg	Pos	Neg	Pos	Neg	Pos	Neg	Pos	Neg
80.0	60.0	100.0	60.0	100.0	60.0	100.0	60.0	100.0	60.0	100.0
84.0	60.0	100.0	60.0	100.0	60.0	100.0	60.0	100.0	60.0	100.0
96.0	60.0	100.0	60.0	100.0	60.0	100.0	60.0	100.0	60.0	100.0
108.0	60.0	100.0	60.0	100.0	60.0	100.0	60.0	100.0	60.0	91.4
120.0	60.0	100.0	60.0	100.0	60.0	100.0	60.0	88.7	60.0	80.0

DESIGN PRESSURE CHART WITH 3 1/2" SILL RISER

Single Panel width (in)

Frame Height (in)	24.0		30.0		36.0		42.0		48.0	
	Pos	Neg	Pos	Neg	Pos	Neg	Pos	Neg	Pos	Neg
80.0	80.0	100.0	80.0	100.0	80.0	100.0	80.0	100.0	80.0	100.0
84.0	80.0	100.0	80.0	100.0	80.0	100.0	80.0	100.0	80.0	100.0
96.0	80.0	100.0	80.0	100.0	80.0	100.0	80.0	100.0	80.0	100.0
108.0	80.0	100.0	80.0	100.0	80.0	100.0	80.0	100.0	80.0	91.4
120.0	80.0	100.0	80.0	100.0	80.0	100.0	80.0	88.7	80.0	80.0

DESIGN PRESSURE CHART WITH 3" SILL RISER

Single Panel width (in)

Frame Height (in)	24.0		30.0		36.0		42.0		48.0	
	Pos	Neg	Pos	Neg	Pos	Neg	Pos	Neg	Pos	Neg
80.0	80.0	100.0	80.0	100.0	80.0	100.0	80.0	100.0	80.0	100.0
84.0	80.0	100.0	80.0	100.0	80.0	100.0	80.0	100.0	80.0	100.0
96.0	80.0	100.0	80.0	100.0	80.0	100.0	80.0	100.0	80.0	100.0
108.0	80.0	100.0	80.0	100.0	80.0	100.0	80.0	100.0	80.0	91.4
120.0	80.0	100.0	80.0	100.0	80.0	100.0	80.0	88.7	80.0	80.0

DESIGNPRESSURE CHART WITH 4 1/4" SILL RISER

Single Panel width (in)

Frame Height (in)	24.0		30.0		36.0		42.0		48.0	
	Pos	Neg	Pos	Neg	Pos	Neg	Pos	Neg	Pos	Neg
80.0	80.0	100.0	80.0	100.0	80.0	100.0	80.0	100.0	80.0	100.0
84.0	80.0	100.0	80.0	100.0	80.0	100.0	80.0	100.0	80.0	100.0
96.0	80.0	100.0	80.0	100.0	80.0	100.0	80.0	100.0	80.0	100.0
108.0	80.0	100.0	80.0	100.0	80.0	100.0	80.0	100.0	80.0	91.4
120.0	80.0	100.0	80.0	100.0	80.0	100.0	80.0	88.7	80.0	80.0

GENERAL DLO FORMULA:
DLO HEIGHT = PANEL HEIGHT – 9.0625"
DLO WIDTH = PANEL WIDTH – 9.25"
PANEL HEIGHT = FRAME HEIGHT – 1.6875"

PRODUCT REVISED
as complying with the Florida Building Code
Acceptance No 12-0130.03
Expiration Date MAR 17, 2015
By Ishaq I. Chanda
Miami Dade Product Control

PRODUCT REVIEWED
as complying with the Florida Building Code
Acceptance No 08-1010.06
Expiration Date MARCH 17, 2015
By Ishaq I. Chanda
Miami Dade Product Control Division

TABLE OF CONTENTS

SHEET	SHEET DESCRIPTION
1 TO 5	ELEVATION & GENERAL NOTES
6 TO 9	ANCHORING DETAILS
10 TO 13	VERTICAL CROSS SECTIONS
14 TO 18	HORIZONTAL CROSS SECTIONS
19	GLAZING DETAILS
20	BILL OF MATERIALS
21 & 22	COMPONENTS

SHEET	REV	DESCRIPTION	DATE	BY
1 – 22	E	PER DADE COUNTY LETTER DATED 01/11/10	01/12/10	TJH
1 – 22	D	PER DADE COUNTY LETTER DATED 10/06/09	10/12/09	TJH
1 – 23	C	PER DADE COUNTY LETTER DATED 01/15/09	03/13/09	TJH
	B	General revision and update to 2007 FBC	07/24/08	DRL
	A	Per Dade County letter dated 12/03/04	12/21/04	BB

REVISIONS

LUIS R. LOMAS P.E.
2/1/10
FLORIDA REGISTRATION NO. 62514

WinDoor INCORPORATED
7500 AMSTERDAM DRIVE
ORLANDO, FL 32832
Phone: 407.481.8400
Fax: 407.481.0505
www.windoorinc.com

Dwg Title:
SERIES 8000 SGD 4'0 X 10'0 LM
ELEVATION, GENERAL NOTES & DESIGN PRESSURES

SIZE	Drn By:	DWG NO.	REV
B	BB	WIND0082	E

SCALE	DATE:	SHEET
N.T.S.	09/13/04	1 OF 22

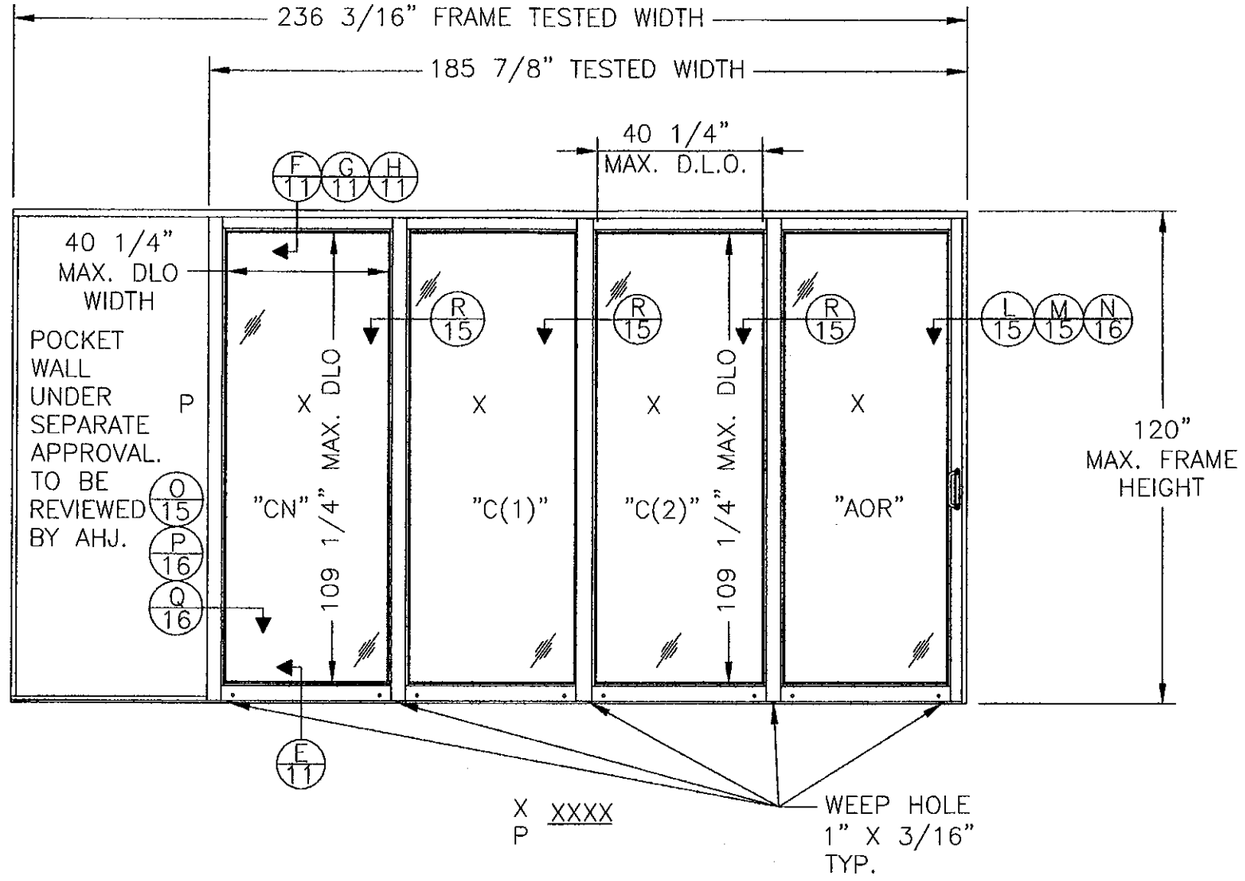

8000 XXXX POCKET SLIDING GLASS DOOR

"CN" PANEL (ACTIVE) = 49 1/2" X 118 5/16"
"C(1)" PANEL (ACTIVE) = 49 1/2" X 118 5/16"
"C(2)" PANEL (ACTIVE) = 49 1/2" X 118 5/16"
"AOR" PANEL (ACTIVE) = 49 1/8" X 118 5/16"

PRODUCT REVISED
as complying with the Florida
Building Code
Acceptance No. 12-0130.03
Expiration Date 3/17/15
By Ishaq I. Chanda
Miami Dade Product Control

PRODUCT REVIEWED
as complying with the Florida
Building Code
Acceptance No. 08-1010.06
Expiration Date MARCH 17, 2015
By Ishaq I. Chanda
Miami Dade Product Control
Division

SHEET	REV	DESCRIPTION	DATE	BY
1 – 22	E	PER DADE COUNTY LETTER DATED 01/11/10	01/12/10	TJH
1 – 22	D	PER DADE COUNTY LETTER DATED 10/06/09	10/12/09	TJH
1 – 23	C	PER DADE COUNTY LETTER DATED 01/15/09	03/13/09	TJH
	B	General revision and update to 2007 FBC	07/24/08	DRL
	A	Per Dade County letter dated 12/03/04	12/21/04	BB

REVISIONS

LUIS R. LOMAS P.E.
8/1/10
FLORIDA REGISTRATION
NO. 62514

WinDoor INCORPORATED
7500 AMSTERDAM DRIVE
ORLANDO, FL 32832
Phone: 407.481.8400
Fax: 407.481.0505
www.windoorinc.com

Dwg Title:
SERIES 8000 POCKET SGD LARGE MISSILE
ELEVATION 4'0 X 10'0 PANELS

SIZE	Drn By:	DWG NO.	REV
B	BB	WIND0082	E

SCALE N.T.S. | DATE: 09/13/04 | SHEET 2 OF 22

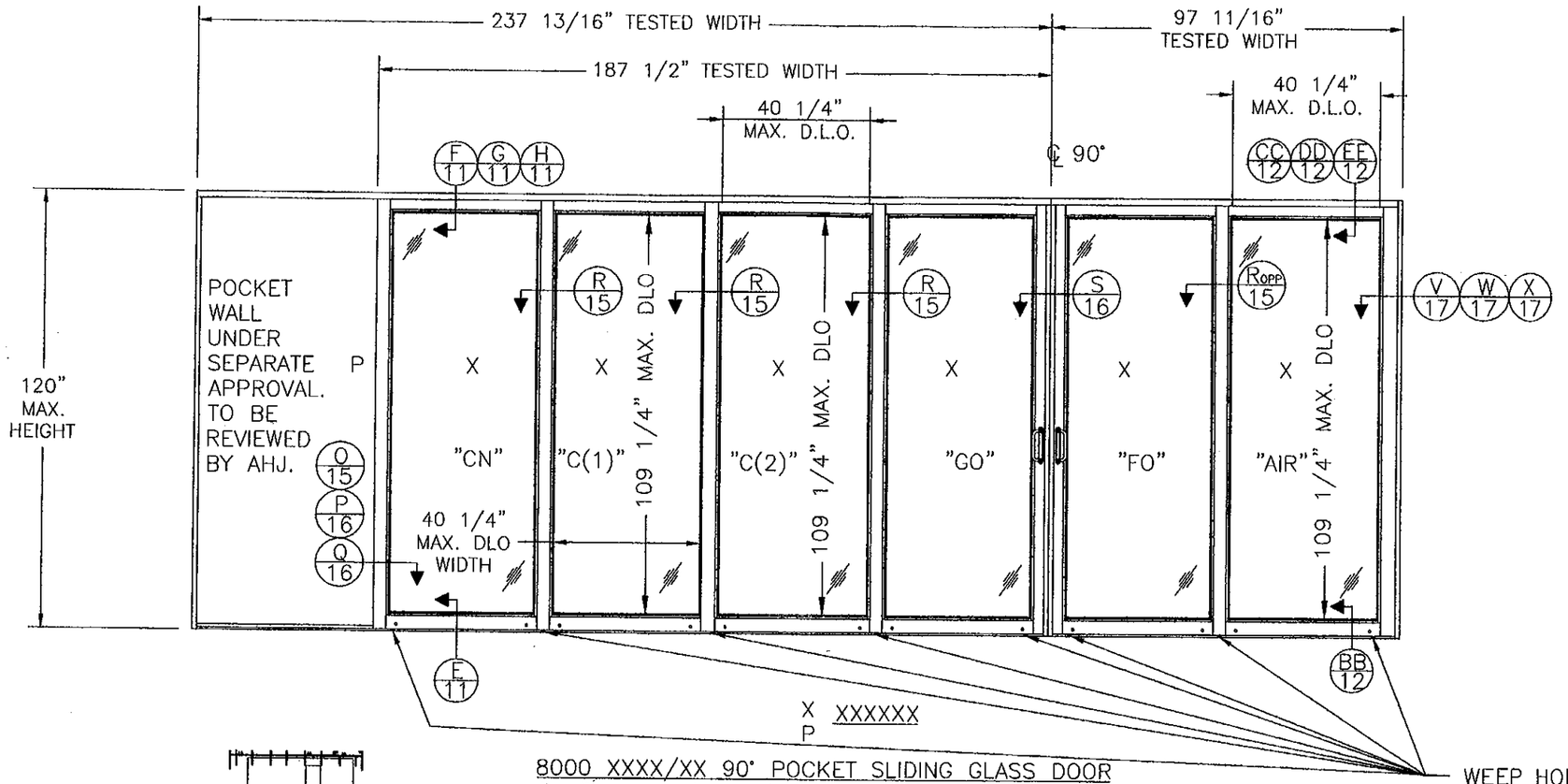

8000 XXXX/XX 90° POCKET SLIDING GLASS DOOR

"CN" PANEL (ACTIVE) = 49 1/2" X 118 5/16"
"C(1)" PANEL (ACTIVE) = 49 1/2" X 118 5/16"
"C(2)" PANEL (ACTIVE) = 49 1/2" X 118 5/16"
"AIR" PANEL (ACTIVE) = 49 1/2" X 118 5/16"
"FO" PANEL (ACTIVE) = 50 1/4" X 118 5/16"
"GO" PANEL (ACTIVE) = 50 1/4" X 118 5/16"

WEEP HOLE
1" X 3/16"
TYP.

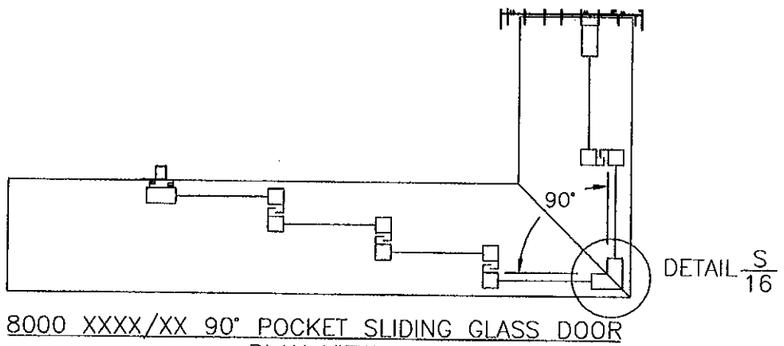

8000 XXXX/XX 90° POCKET SLIDING GLASS DOOR
PLAN VIEW

PRODUCT REVISED
as complying with the Florida Building Code
Acceptance No. 12-0130.03
Expiration Date 3/17/15
By Ishaq I. Chanda
Miami Dade Product Control

PRODUCT RENEWED
as complying with the Florida Building Code
Acceptance No. 08 1010.06
Expiration Date MARCH 17 2015
By Ishaq I. Chanda
Miami Dade Product Control Division

SHEET	REV	DESCRIPTION	DATE	BY
1 – 22	E	PER DADE COUNTY LETTER DATED 01/11/10	01/12/10	TJH
1 – 22	D	PER DADE COUNTY LETTER DATED 10/06/09	10/12/09	TJH
1 – 23	C	PER DADE COUNTY LETTER DATED 01/15/09	03/13/09	TJH
	B	General revision and update to 2007 FBC	07/24/08	DRL
	A	Per Dade County letter dated 12/03/04	12/21/04	BB

REVISIONS

LUIS R. LOMAS P.E.
Luis R. Lomas
2/1/10
FLORIDA REGISTRATION NO. 62514

WinDoor INCORPORATED
7500 AMSTERDAM DRIVE
ORLANDO, FL 32832
Phone: 407.481.8400
Fax: 407.481.0505
www.windoorinc.com

Dwg Title:
SERIES 8000 90 DEGREE SGD LARGE MISSILE
ELEVATION 4'0 X 10'0 PANELS

SIZE	Drn By:	DWG NO.	REV
B	BB	WIND0082	E

SCALE N.T.S. | DATE: 09/13/04 | SHEET 3 OF 22

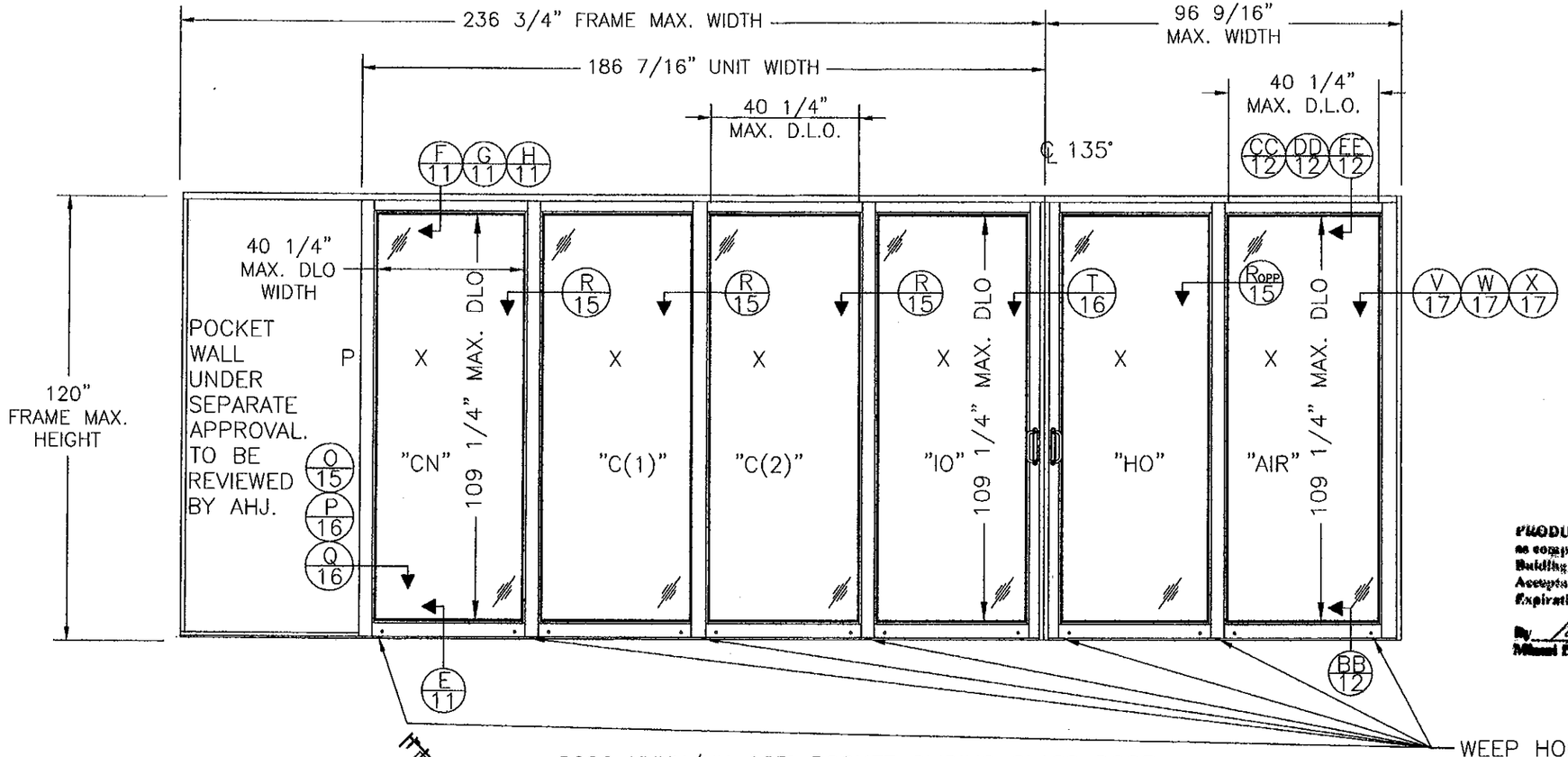

8000 XXXX/XX 135° POCKET SLIDING GLASS DOOR

"CNO" PANEL (ACTIVE) = 49 1/2" X 118 5/16"
"C(1)" PANEL (ACTIVE) = 49 1/2" X 118 5/16"
"C(2)" PANEL (ACTIVE) = 49 1/2" X 118 5/16"
"IO" PANEL (ACTIVE) = 50 1/4" X 118 5/16"
"HO" PANEL (ACTIVE) = 50 1/4" X 118 5/16"
"AIR" PANEL (ACTIVE) = 49 1/2" X 118 5/16"

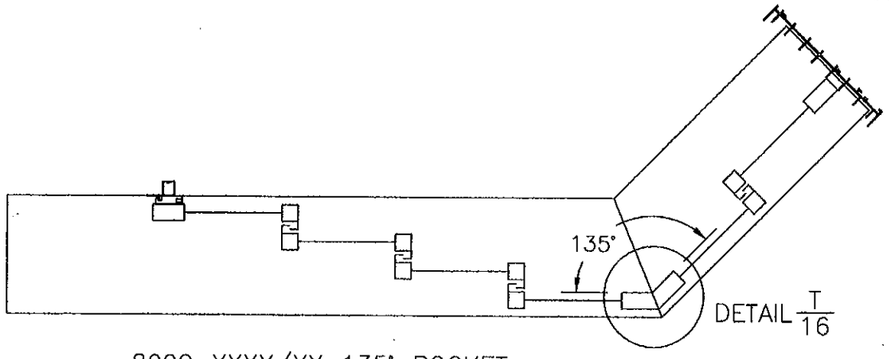

8000 XXXX/XX 135° POCKET SLIDING GLASS DOOR PLAN VIEW

PRODUCT REVISED
as complying with the Florida Building Code
Acceptance No. 12-0130.03
Expiration Date 3/17/15
By Ishaq I. Chande
Miami Dade Product Control

PRODUCT RENEWED
as complying with the Florida Building Code
Acceptance No. 08-1010.06
Expiration Date MARCH 17, 2015
By Ishaq I. Chande
Miami Dade Product Control Division

SHEET	REV	DESCRIPTION	DATE	BY
1 – 22	E	PER DADE COUNTY LETTER DATED 01/11/10	01/12/10	TJH
1 – 22	D	PER DADE COUNTY LETTER DATED 10/06/09	10/12/09	TJH
1 – 23	C	PER DADE COUNTY LETTER DATED 01/15/09	03/13/09	TJH
	B	General revision and update to 2007 FBC	07/24/08	DRL
	A	Per Dade County letter dated 12/03/04	12/21/04	BB

REVISIONS

LUIS R. LOMAS P.E.
Luis R. Lomas
2/1/10
FLORIDA REGISTRATION NO. 62514

WinDoor INCORPORATED
7500 AMSTERDAM DRIVE
ORLANDO, FL 32832
Phone: 407.481.8400
Fax: 407.481.0505
www.windoorinc.com

Dwg Title: SERIES 8000 135 DEGREE POCKET SGD LM ELEVATION 4'0 X 10'0 PANELS

SIZE	Drn By:	DWG NO.	REV
B	BB	WIND0082	E

SCALE N.T.S. DATE: 09/13/04 SHEET 4 OF 22

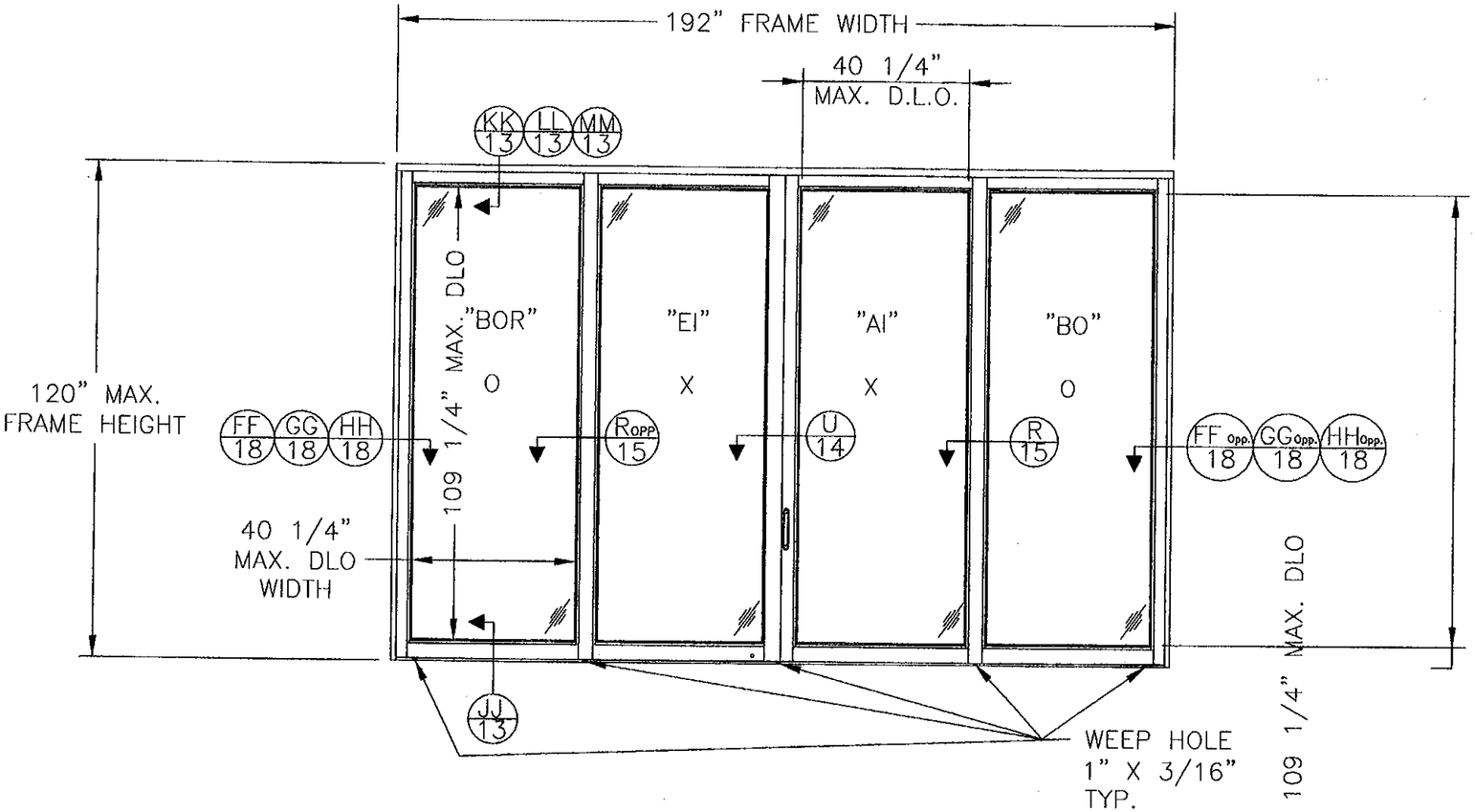

8000 OXXO SLIDING GLASS DOOR

"BOR" PANEL (FIXED) = 49-1/2" X 118-5/16"
"EI" PANEL (ACTIVE) = 50-1/4" X 118-5/16"
"AI" PANEL (ACTIVE) = 49-1/2" X 118-5/16"
"BO" PANEL (FIXED) = 49-1/2" X 118-5/16"

PRODUCT REVISED
as complying with the Florida Building Code
Acceptance No. 12-0130.03
Expiration Date 2/17/15
By Ishaq I. Chanda
Miami Dade Product Control

PRODUCT REVIEWED
as complying with the Florida Building Code
Acceptance No. 08-1010.06
Expiration Date MARCH 17 2015
By Ishaq I. Chanda
Miami Dade Product Control Division

SHEET	REV	DESCRIPTION	DATE	BY
1 – 22	E	PER DADE COUNTY LETTER DATED 01/11/10	01/12/10	TJH
1 – 22	D	PER DADE COUNTY LETTER DATED 10/06/09	10/12/09	TJH
1 – 23	C	PER DADE COUNTY LETTER DATED 01/15/09	03/13/09	TJH
	B	General revision and update to 2007 FBC	07/24/08	DRL
	A	Per Dade County letter dated 12/03/04	12/21/04	BB

REVISIONS

LUIS R. LOMAS P.E.
Luis R. Lomas
2/1/10
FLORIDA REGISTRATION
NO. 62514

WinDoor INCORPORATED
7500 AMSTERDAM DRIVE
ORLANDO, FL 32832
Phone: 407.481.8400
Fax: 407.481.0505
www.windoorinc.com

Dwg Title:
SERIES 8000 SGD LARGE MISSILE
ELEVATION 4'0 X 10'0 PANELS

SIZE	Drn By:	DWG NO.	REV
B	BB	WIND0082	E

SCALE	DATE:	SHEET
N.T.S.	09/13/04	5 OF 22

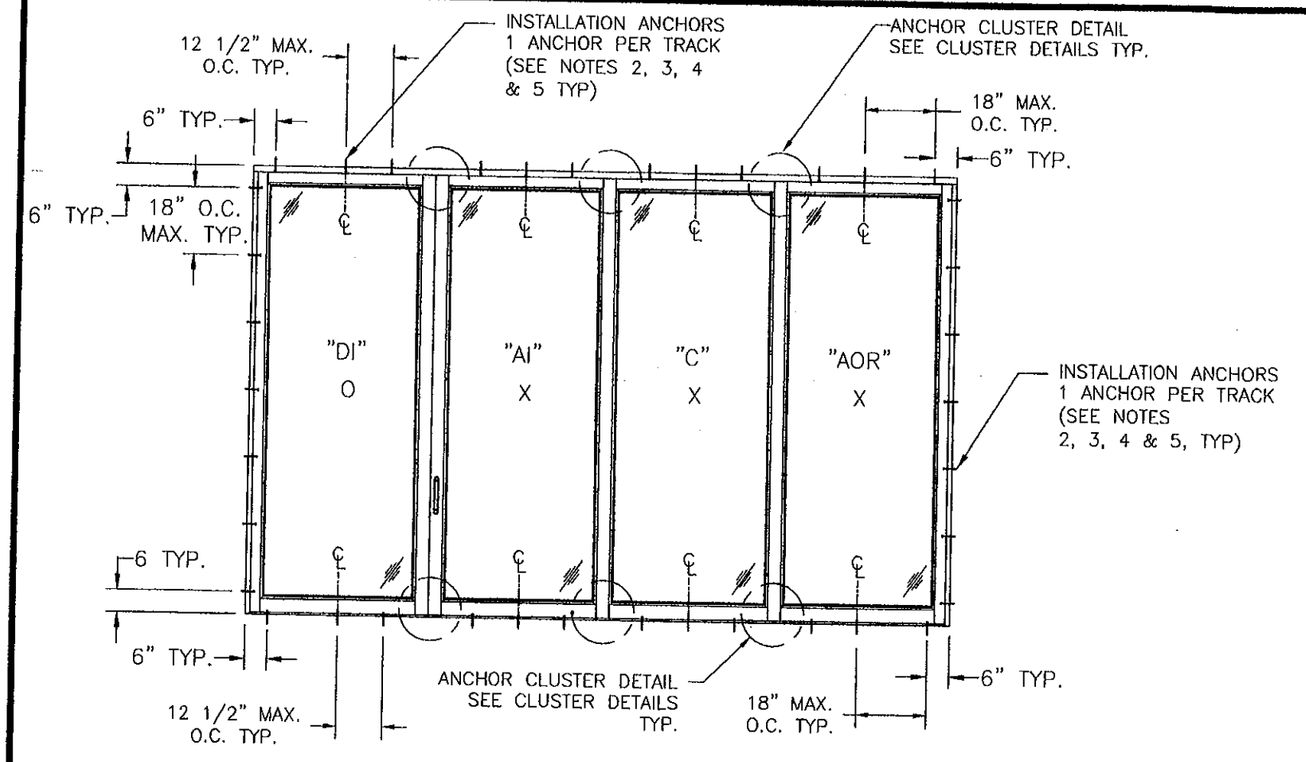

SERIES 8000 OXXX REINFORCED SLIDING GLASS DOOR
SEE NOTES THIS SHEET

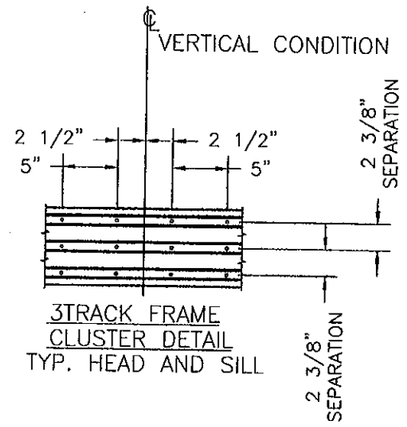

3TRACK FRAME
CLUSTER DETAIL
TYP. HEAD AND SILL

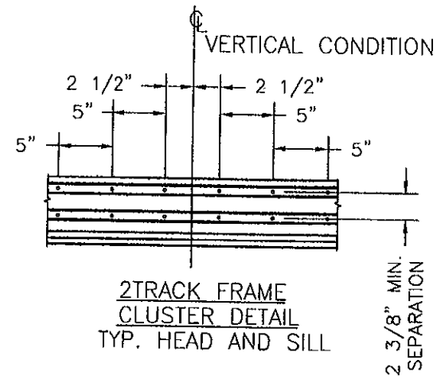

2TRACK FRAME
CLUSTER DETAIL
TYP. HEAD AND SILL

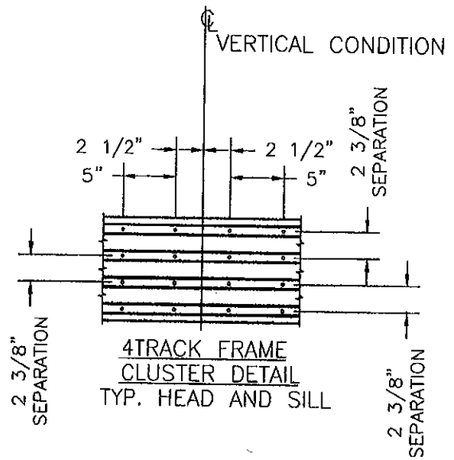

4TRACK FRAME
CLUSTER DETAIL
TYP. HEAD AND SILL

INSTALLATION NOTES:

1) LOAD BEARING SHIM AS REQ'D. AT EA. SET OF INSTALLATION ANCHORS USING LOAD BEARING SHIMS. MAX. ALLOWABLE SHIM STACK TO BE 1/4". USE SHIMS WHERE SPACE GREATER THAN 1/16" IS PRESENT.
2) ON 2 TRACK FRAME TWO (2) ANCHORS ARE REQUIRED AT EACH ANCHOR LOCATION SHOWN.
   ON 3 TRACK FRAME THREE (3) ANCHORS ARE REQUIRED AT EACH ANCHOR LOCATION SHOWN.
   ON 4 TRACK FRAME FOUR (4) ANCHORS ARE REQUIRED AT EACH ANCHOR LOCATION SHOWN.
   POCKET DOOR HOOK STRIPS REQUIRE ONE (1) ANCHOR AT EACH ANCHOR LOCATION SHOWN.
3) CONCRETE OR MASONRY SUBSTRATE WHERE 1X WOOD BUCKING IS EMPLOYED,(1X TO BE PROPERLY SECURED), USE 1/4" DIA. ITW TAPCON CONCRETE ANCHORS OF SUFFICIENT LENGTH TO ACHIEVE MIN. OF 1 1/4" INTO CONCRETE OR MASONRY.
4) WOOD FRAME SUBSTRATE, USE #14 WOOD SCREWS OF SUFFICIENT LENGTH TO ACHIEVE MIN. EMBEDMENT OF 1 3/4" INTO WOOD FRAMING.
5) STEEL STUD FRAMING, USE #14 WOOD SCREW OF SUFFICIENT LENGTH TO ACHIEVE A MINIMUM EMBEDMENT OF 1 3/4" THRU THE STEEL FRAME WITH WOOD BACKING.

PRODUCT REVISED
as complying with the Florida Building Code
Acceptance No 12-0130.03
Expiration Date 3.17.2015
By Ishaq I. Chang
Miami Dade Product Control

PRODUCT RENEWED
as complying with the Florida Building Code
Acceptance No 08-1010.06
Expiration Date MARCH 17, 2015
By Ishaq I. Chang
Miami Dade Product Control Division

SHEET	REV	DESCRIPTION	DATE	BY
1 – 22	E	PER DADE COUNTY LETTER DATED 01/11/10	01/12/10	TJH
1 – 22	D	PER DADE COUNTY LETTER DATED 10/06/09	10/12/09	TJH
1 – 23	C	PER DADE COUNTY LETTER DATED 01/15/09	03/13/09	TJH
	B	General revision and update to 2007 FBC	07/24/08	DRL
	A	Per Dade County letter dated 12/03/04	12/21/04	BB

REVISIONS

LUIS R. LOMAS P.E.
FLORIDA REGISTRATION NO. 62514

WinDoor INCORPORATED
7500 AMSTERDAM DRIVE
ORLANDO, FL 32832
Phone: 407.481.8400
Fax 407.481.0505
www.windoorinc.com

Dwg Title:
SERIES 8000 SGD LARGE MISSILE ANCHORING DETAILS 4'0 X 10'0 PANELS

SIZE	Drn By:	DWG NO.	REV
B	BB	WIND0082	E

SCALE	DATE:	SHEET
N.T.S.	09/13/04	6 OF 22

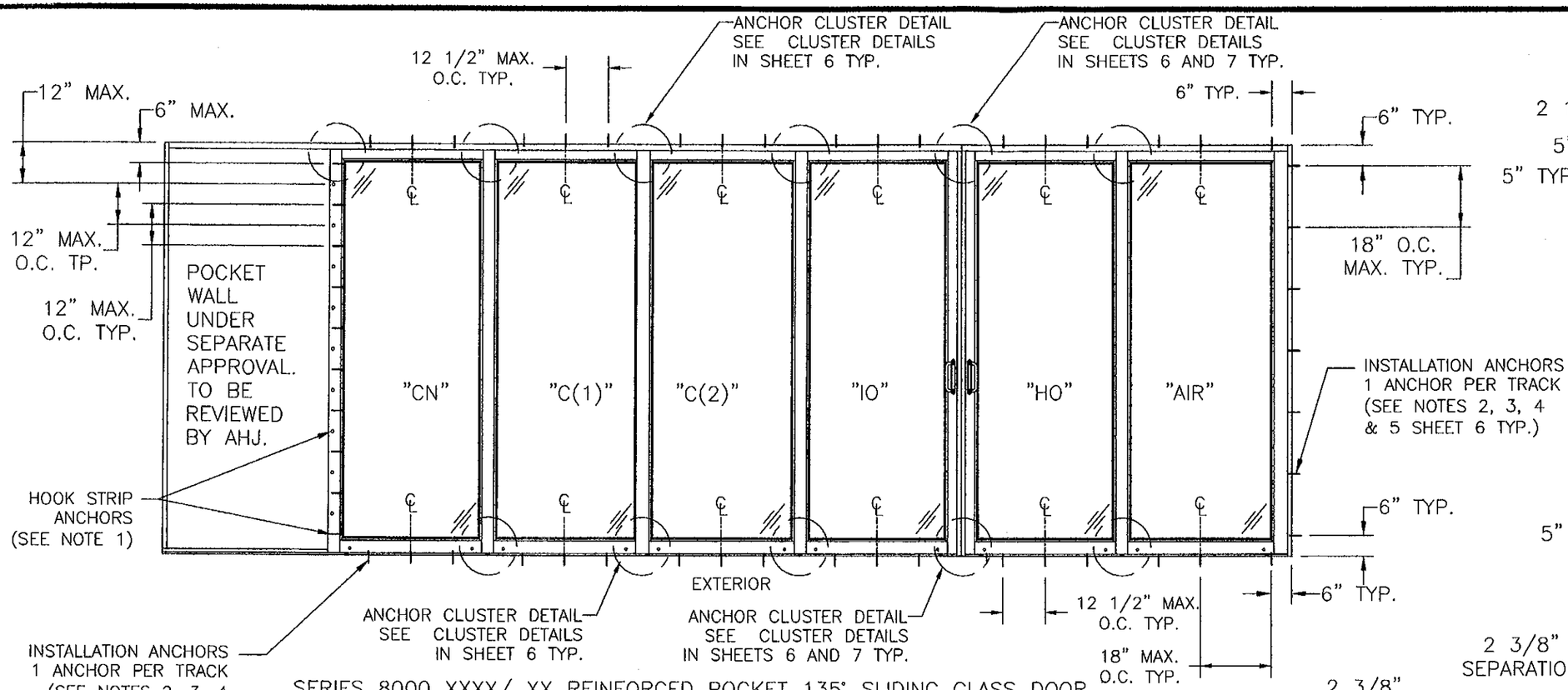

SERIES 8000 XXXX/ XX REINFORCED POCKET 135° SLIDING GLASS DOOR
SEE NOTES SHEET 6

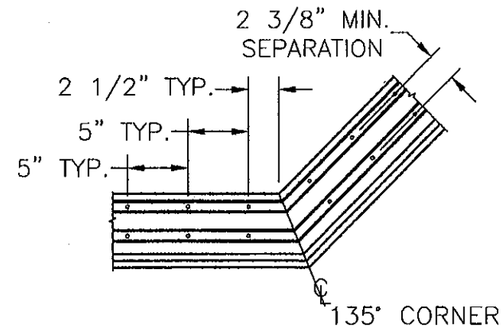

2TRACK FRAME
CLUSTER DETAIL AT CORNER
TYP. HEAD AND SILL

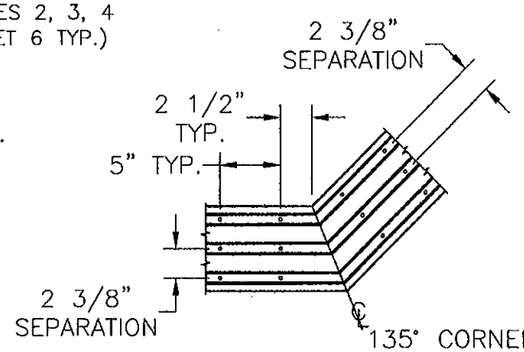

3TRACK FRAME
CLUSTER DETAIL AT CORNER
TYP. HEAD AND SILL

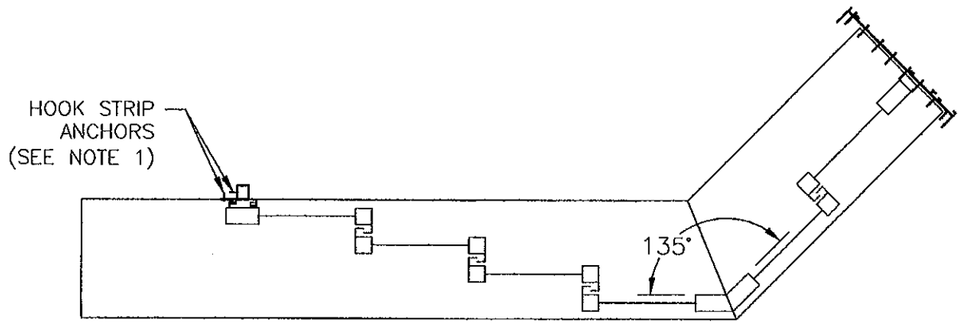

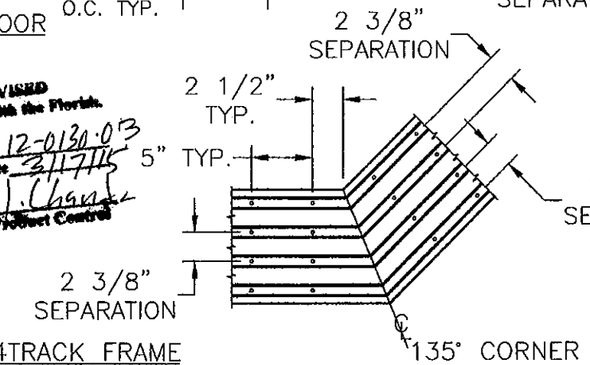

4TRACK FRAME
CLUSTER DETAIL AT CORNER
TYP. HEAD AND SILL

PRODUCT REVISED
as complying with the Florida
Building Code
Acceptance No 12-0130.03
Expiration Date 3/17/15
By Ishaq I. Chanda
Miami Dade Product Control

PRODUCT RENEWED
as complying with the Florida
Building Code
Acceptance No 08-1010.06
Expiration Date MARCH 17, 2015
By Ishaq I. Chanda
Miami Dade Product Control
Division

SERIES 8000 XXXX/ XX REINFORCED POCKET
135° SLIDING GLASS DOOR
PLAN VIEW

NOTE:

1) THERE ARE TWO ROWS OF ANCHORS AT THE HOOK STRIP. ONE ROW IS ON THE EXTERIOR AND THE OTHER IS ON JAMB SIDE. SEE HORIZONTAL CROSS SECTION ABOVE AND DETAILS ON SHEETS 15 AND 16.

SHEET	REV	DESCRIPTION	DATE	BY
1 – 22	E	PER DADE COUNTY LETTER DATED 01/11/10	01/12/10	TJH
1 – 22	D	PER DADE COUNTY LETTER DATED 10/06/09	10/12/09	TJH
1 – 23	C	PER DADE COUNTY LETTER DATED 01/15/09	03/13/09	TJH
	B	General revision and update to 2007 FBC	07/24/08	DRL
	A	Per Dade County letter dated 12/03/04	12/21/04	BB

REVISIONS

LUIS R. LOMAS P.E.
FLORIDA REGISTRATION
NO. 62514

WinDoor INCORPORATED
7500 AMSTERDAM DRIVE
ORLANDO, FL 32832
Phone: 407.481.8400
Fax: 407.481.0505
www.windoorinc.com

Dwg Title:
SERIES 8000 135° SGD LARGE MISSILE
ANCHORING DETAILS 4'0 X 10'0 PANELS

SIZE	Drn By:	DWG NO.	REV
B	BB	WIND0082	E

SCALE	DATE:	SHEET
N.T.S.	09/13/04	7 OF 22

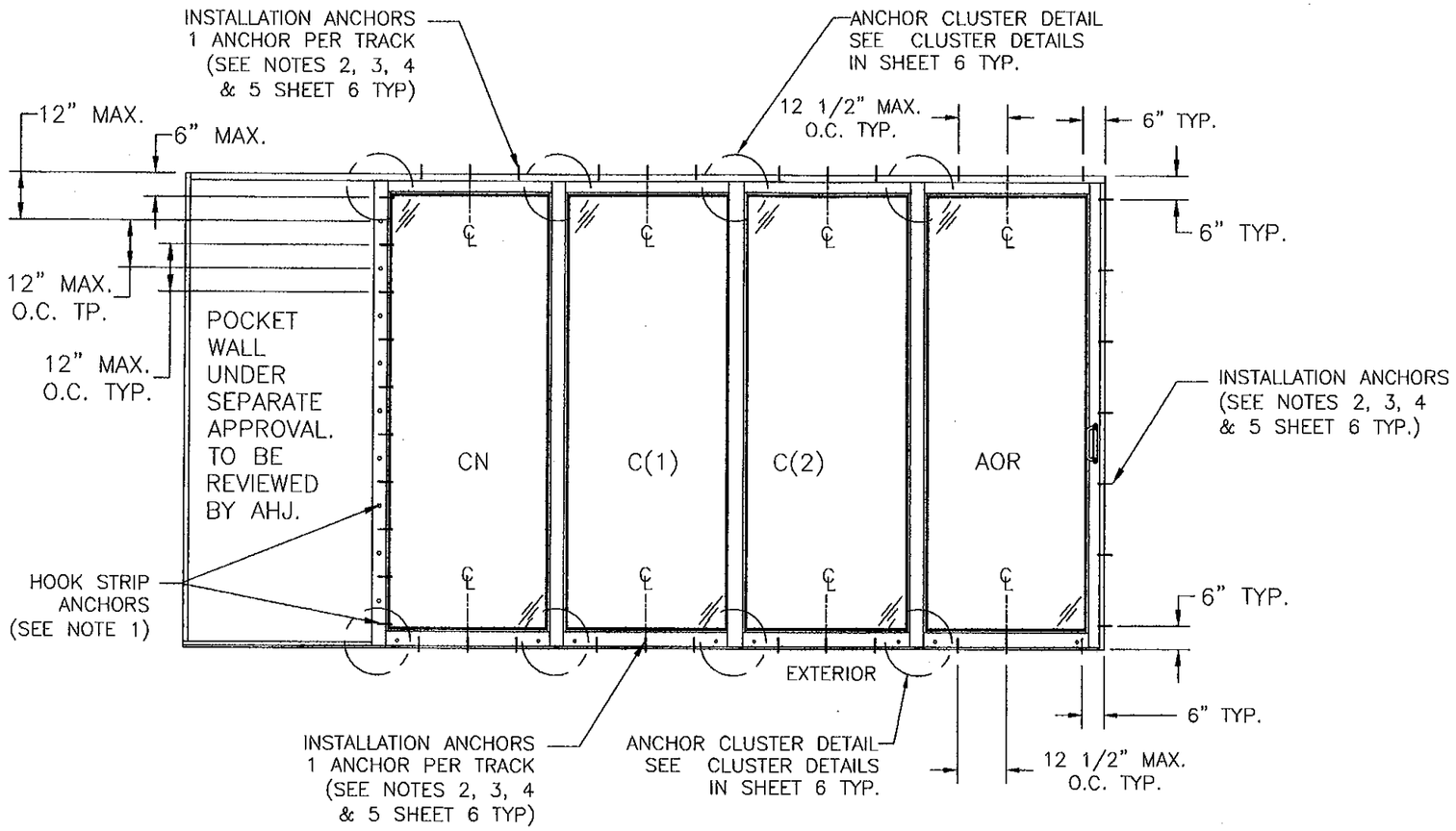

SERIES 8000 XXXX REINFORCED POCKET SLIDING GLASS DOOR
SEE NOTES SHEET 6

PRODUCT REVISED
as complying with the Florida Building Code
Acceptance No. 12-0130.03
Expiration Date 3/17/15
By Ishaq I. Chanda
Miami Dade Product Control

PRODUCT RENEWED
as complying with the Florida Building Code
Acceptance No. 08-1010.06
Expiration Date MARCH 17, 2015
By Ishaq I. Chanda
Miami Dade Product Control Division

NOTE:

1) THERE ARE TWO ROWS OF ANCHORS AT THE HOOK STRIP. ONE ROW IS ON THE EXTERIOR AND THE OTHER IS ON JAMB SIDE. SEE HORIZONTAL CROSS SECTION ABOVE AND DETAILS ON SHEETS 15 AND 16.

SHEET	REV	DESCRIPTION	DATE	BY
1 – 22	E	PER DADE COUNTY LETTER DATED 01/11/10	01/12/10	TJH
1 – 22	D	PER DADE COUNTY LETTER DATED 10/06/09	10/12/09	TJH
1 – 23	C	PER DADE COUNTY LETTER DATED 01/15/09	03/13/09	TJH
	B	General revision and update to 2007 FBC	07/24/08	DRL
	A	Per Dade County letter dated 12/03/04	12/21/04	BB

REVISIONS

LUIS R. LOMAS P.E.
FLORIDA REGISTRATION
NO. 62514

WinDoor INCORPORATED
7500 AMSTERDAM DRIVE
ORLANDO, FL 32832
Phone: 407.481.8400
Fax: 407.481.0505
www.windoorinc.com

Dwg Title:
SERIES 8000 POCKET SGD LARGE MISSILE
ANCHORING DETAILS 4'0 X 10'0 PANELS

SIZE	Drn By:	DWG NO.	REV
B	BB	WIND0082	E

SCALE N.T.S. | DATE: 09/13/04 | SHEET 8 OF 22

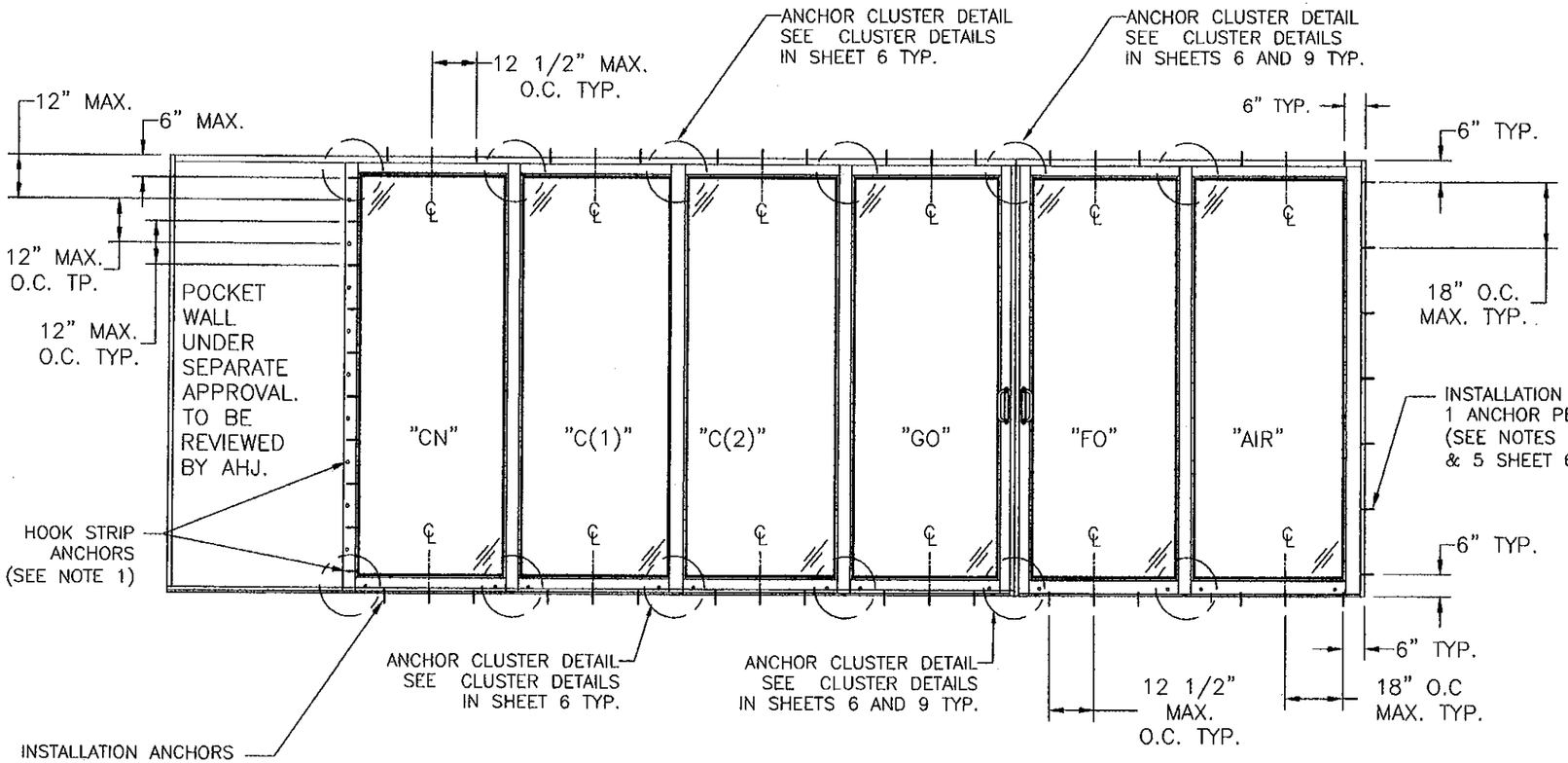

SERIES 8000 XXXX/ XX REINFORCED POCKET 90° SLIDING GLASS DOOR
SEE NOTES SHEET 6

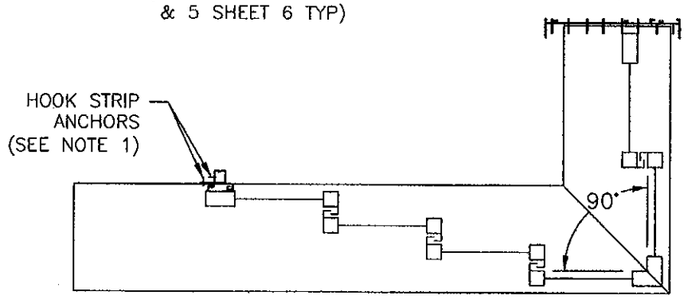

SERIES 8000 XXXX/ XX REINFORCED POCKET 90° SLIDING GLASS DOOR
PLAN VIEW

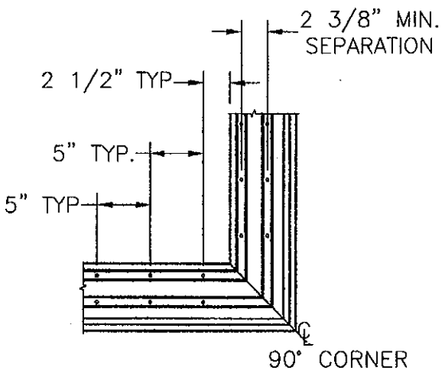

2TRACK FRAME
CLUSTER DETAIL AT CORNER
TYP. HEAD AND SILL

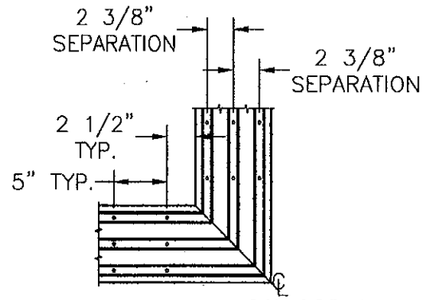

3TRACK FRAME
CLUSTER DETAIL AT CORNER
TYP. HEAD AND SILL

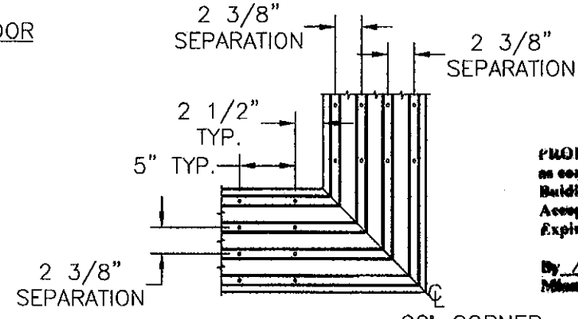

4TRACK FRAME
CLUSTER DETAIL AT CORNER
TYP. HEAD AND SILL

NOTE:
1) THERE ARE TWO ROWS OF ANCHORS AT THE HOOK STRIP. ONE ROW IS ON THE EXTERIOR AND THE OTHER IS ON JAMB SIDE. SEE HORIZONTAL CROSS SECTION ABOVE AND DETAILS ON SHEETS 15 AND 16.

SHEET	REV	DESCRIPTION	DATE	BY
1 – 22	E	PER DADE COUNTY LETTER DATED 01/11/10	01/12/10	TJH
1 – 22	D	PER DADE COUNTY LETTER DATED 10/06/09	10/12/09	TJH
1 – 23	C	PER DADE COUNTY LETTER DATED 01/15/09	03/13/09	TJH
	B	General revision and update to 2007 FBC	07/24/08	DRL
	A	Per Dade County letter dated 12/03/04	12/21/04	BB

REVISIONS

LUIS R. LOMAS P.E.
8/1/10
FLORIDA REGISTRATION NO. 62514

PRODUCT REVISED
as complying with the Florida Building Code
Acceptance No 12-0130.07
Expiration Date 3/17/15
By Ishaq J. Lhaq
Miami Dade/Product Control

PRODUCT RENEWED
as complying with the Florida Building Code
Acceptance No 08-1010.06
Expiration Date MARCH 17 2015
By Ishaq J. Lhaq
Miami Dade Product Control Division

WinDoor INCORPORATED
7500 AMSTERDAM DRIVE
ORLANDO, FL 32832
Phone: 407.481.8400
Fax: 407.481.0505
www.windoorinc.com

Dwg Title:
SERIES 8000 90° SGD LARGE MISSILE
ELEVATION 4'0 X 10'0 PANELS

SIZE	Drn By:	DWG NO.	REV
B	BB	WIND0082	E

SCALE N.T.S. | DATE: 09/13/04 | SHEET 9 OF 22

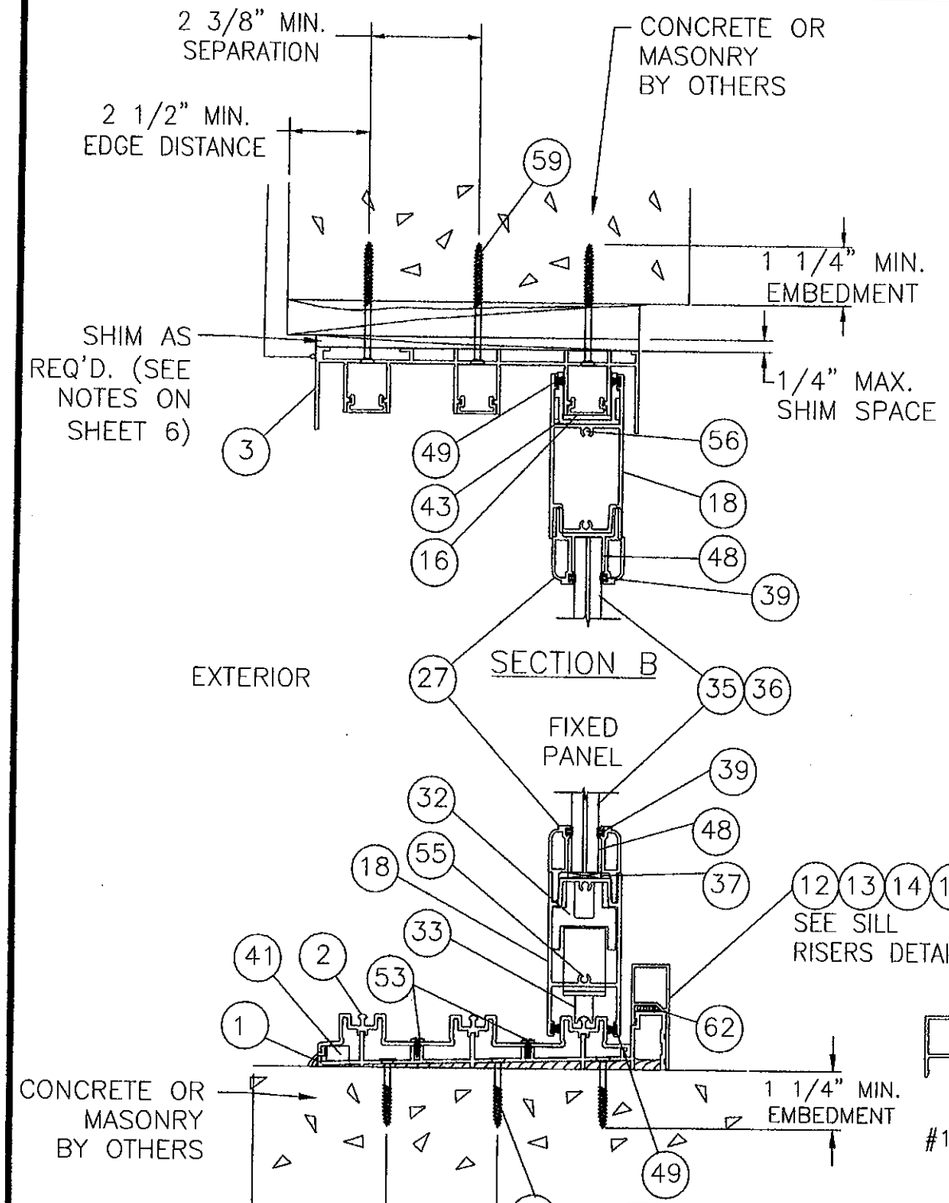

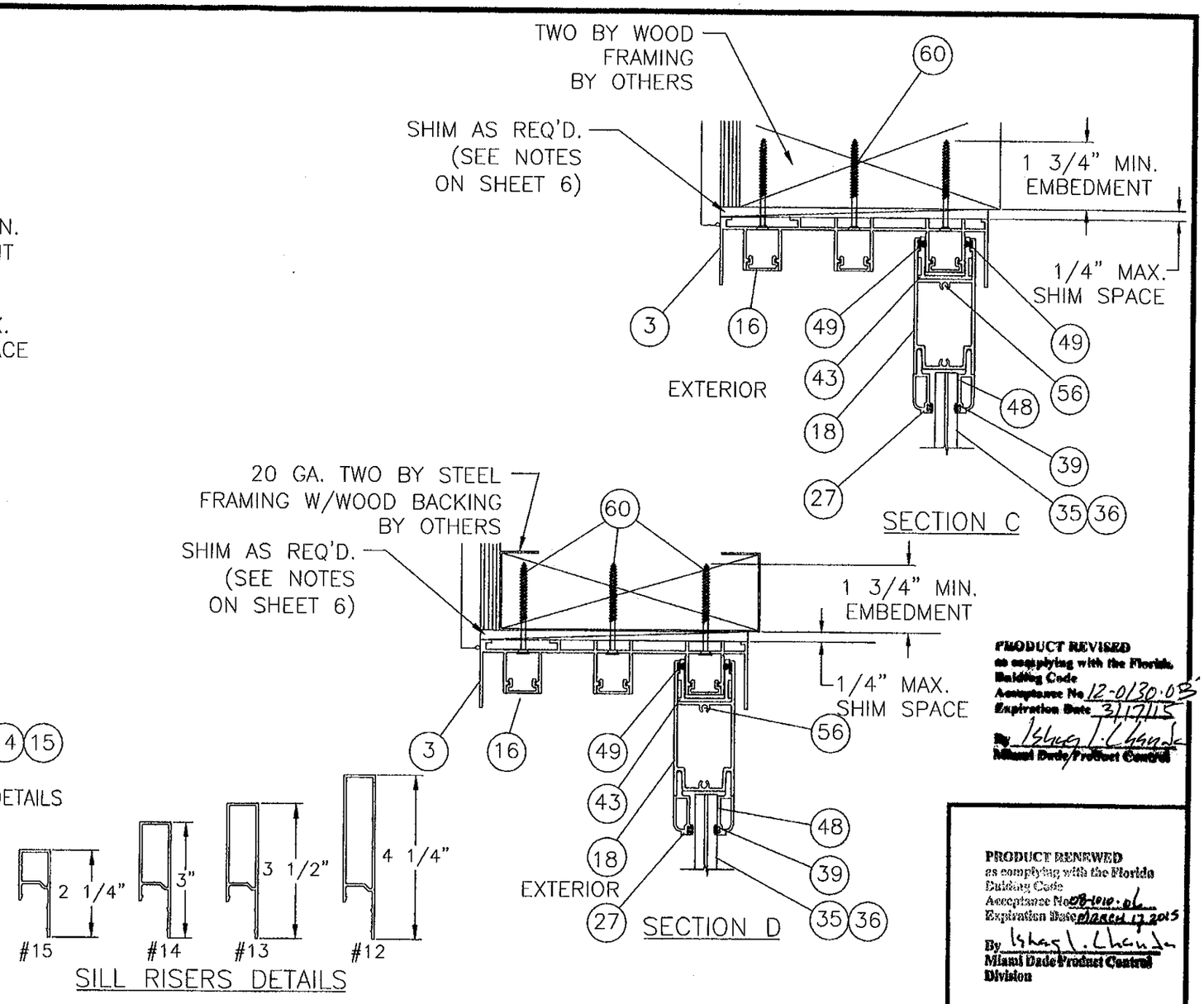

SILL RISERS DETAILS

PRODUCT REVISED
as complying with the Florida Building Code
Acceptance No. 12-0130.03
Expiration Date 3/17/15
By Ishaq I. Chanda
Miami Dade Product Control

PRODUCT RENEWED
as complying with the Florida Building Code
Acceptance No. 08-1010.06
Expiration Date March 17 2015
By Ishaq I. Chanda
Miami Dade Product Control Division

SHEET	REV	DESCRIPTION	DATE	BY
1 – 22	E	PER DADE COUNTY LETTER DATED 01/11/10	01/12/10	TJH
1 – 22	D	PER DADE COUNTY LETTER DATED 10/06/09	10/12/09	TJH
1 – 23	C	PER DADE COUNTY LETTER DATED 01/15/09	03/13/09	TJH
	B	General revision and update to 2007 FBC	07/24/08	DRL
	A	Per Dade County letter dated 12/03/04	12/21/04	BB

REVISIONS

LUIS R. LOMAS P.E.
FLORIDA REGISTRATION NO. 62514

WinDoor INCORPORATED
7500 AMSTERDAM DRIVE
ORLANDO, FL 32832
Phone: 407.481.8400
Fax: 407.481.0505
www.windoorinc.com

Dwg Title:
SERIES 8000 SGD LARGE MISSILE
VERTICAL CROSS SECTIONS 4'0 X 10'0 PANELS

SIZE	Drn By:	DWG NO.	REV
B	BB	WIND0082	E

SCALE N.T.S. | DATE: 09/13/04 | SHEET 10 OF 22

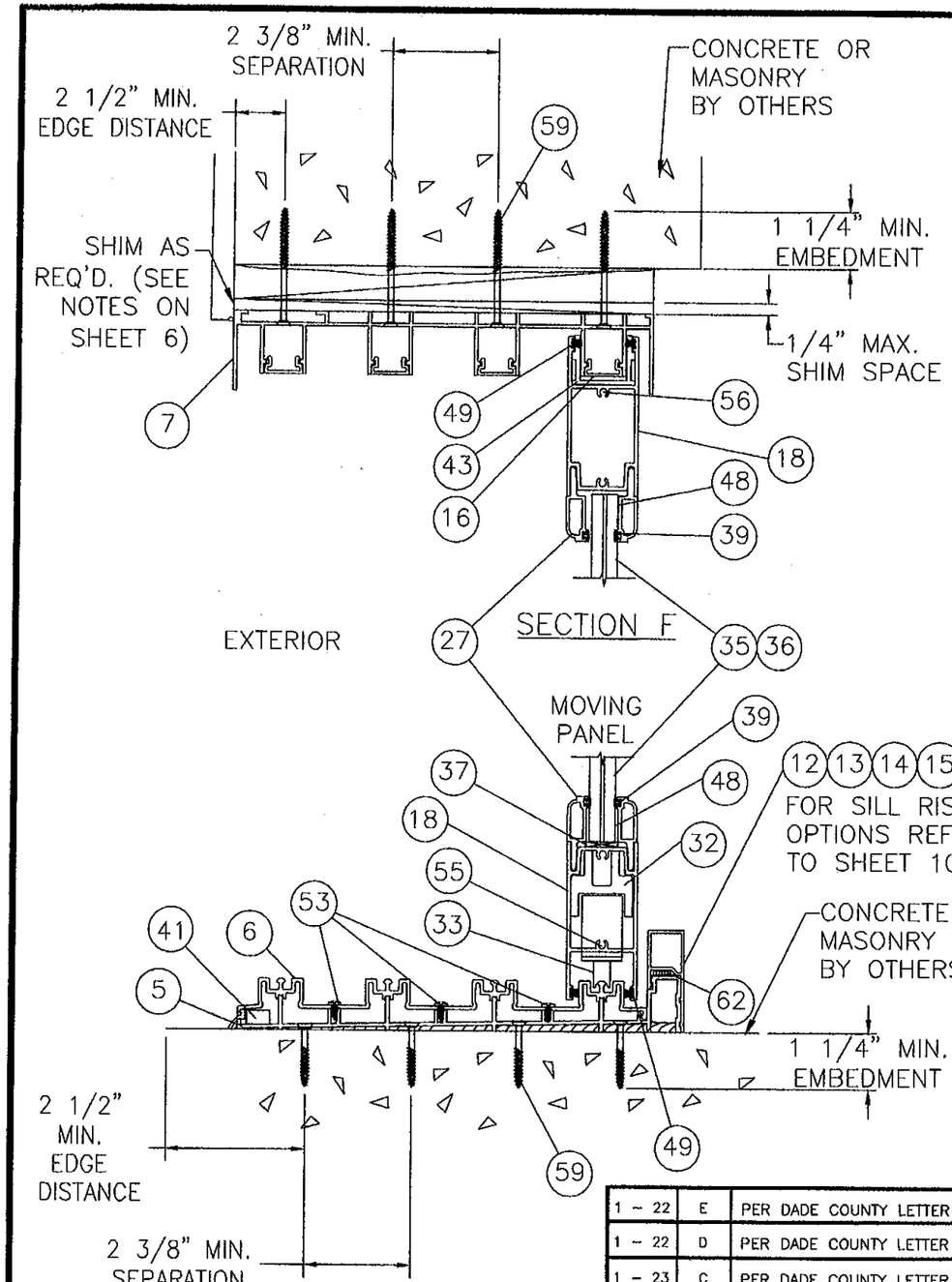

SECTION E

SECTION F

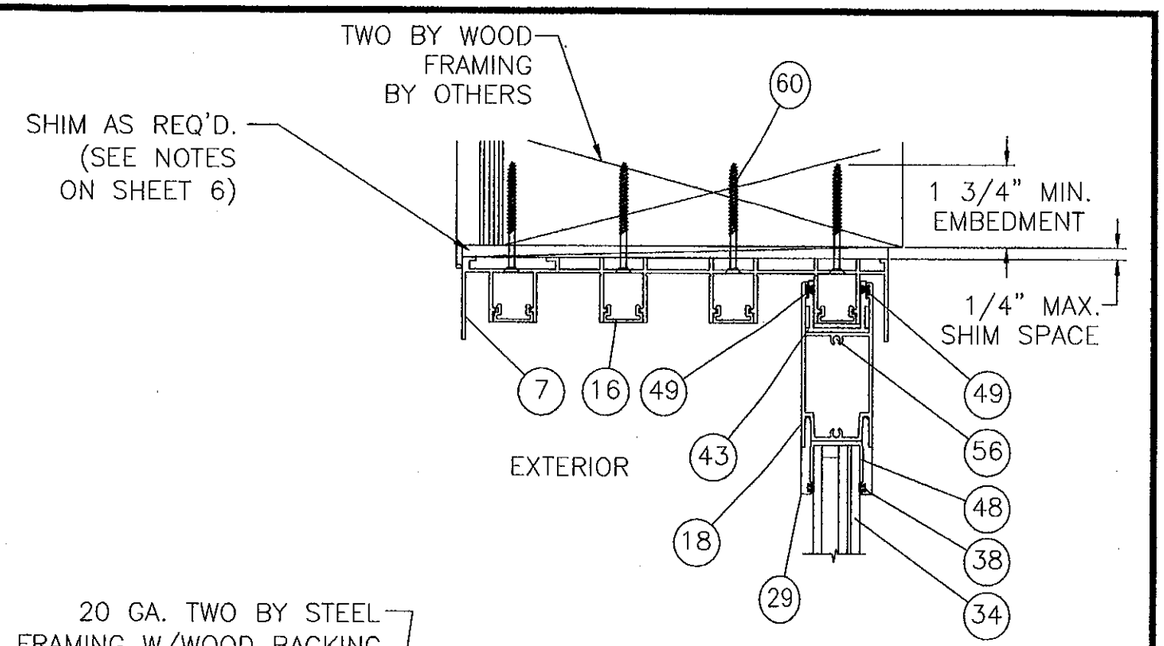

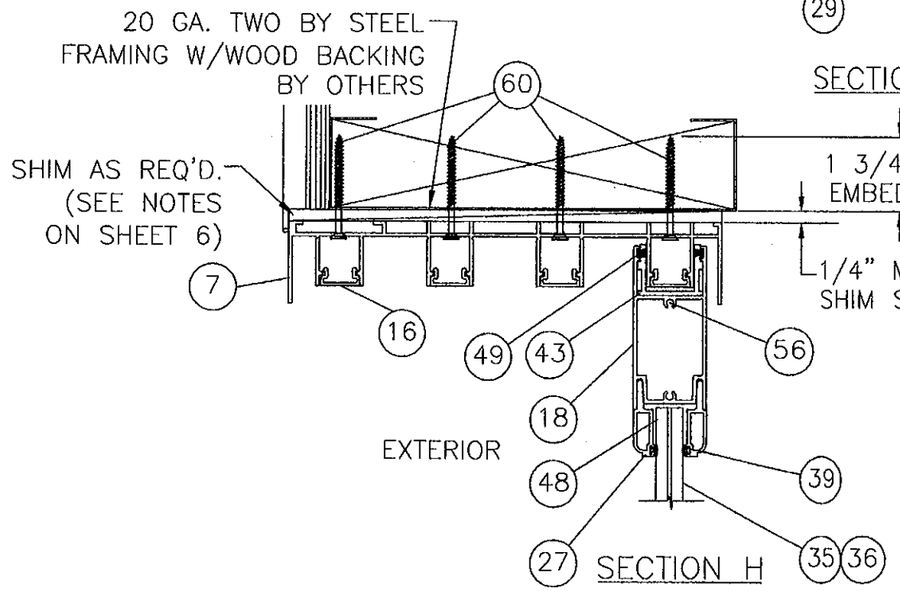

SECTION G

SECTION H

PRODUCT REVISED
as complying with the Florida Building Code
Acceptance No. 12-0130.03
Expiration Date 3/17/15
By Ishaq I. Chanda
Miami Dade Product Control Division

PRODUCT RENEWED
as complying with the Florida Building Code
Acceptance No. 08-1010.06
Expiration Date MARCH 17, 2015
By Ishaq I. Chanda
Miami Dade Product Control Division

SHEET	REV	DESCRIPTION	DATE	BY
1 – 22	E	PER DADE COUNTY LETTER DATED 01/11/10	01/12/10	TJH
1 – 22	D	PER DADE COUNTY LETTER DATED 10/06/09	10/12/09	TJH
1 – 23	C	PER DADE COUNTY LETTER DATED 01/15/09	03/13/09	TJH
	B	General revision and update to 2007 FBC	07/24/08	DRL
	A	Per Dade County letter dated 12/03/04	12/21/04	BB

REVISIONS

LUIS R. LOMAS P.E.
2/1/10
FLORIDA REGISTRATION NO. 62514

WinDoor INCORPORATED
7500 AMSTERDAM DRIVE
ORLANDO, FL 32832
Phone: 407.481.8400
Fax: 407.481.0505
www.windoorinc.com

Dwg Title:
SERIES 8000 POCKET, 90° & 135°SGD LM
VERTICAL CROSS SECTIONS 4'0 X 10'0 PANELS

SIZE	Drn By:	DWG NO.	REV
B	BB	WIND0082	E

SCALE	DATE:	SHEET
N.T.S.	09/13/04	11 OF 22

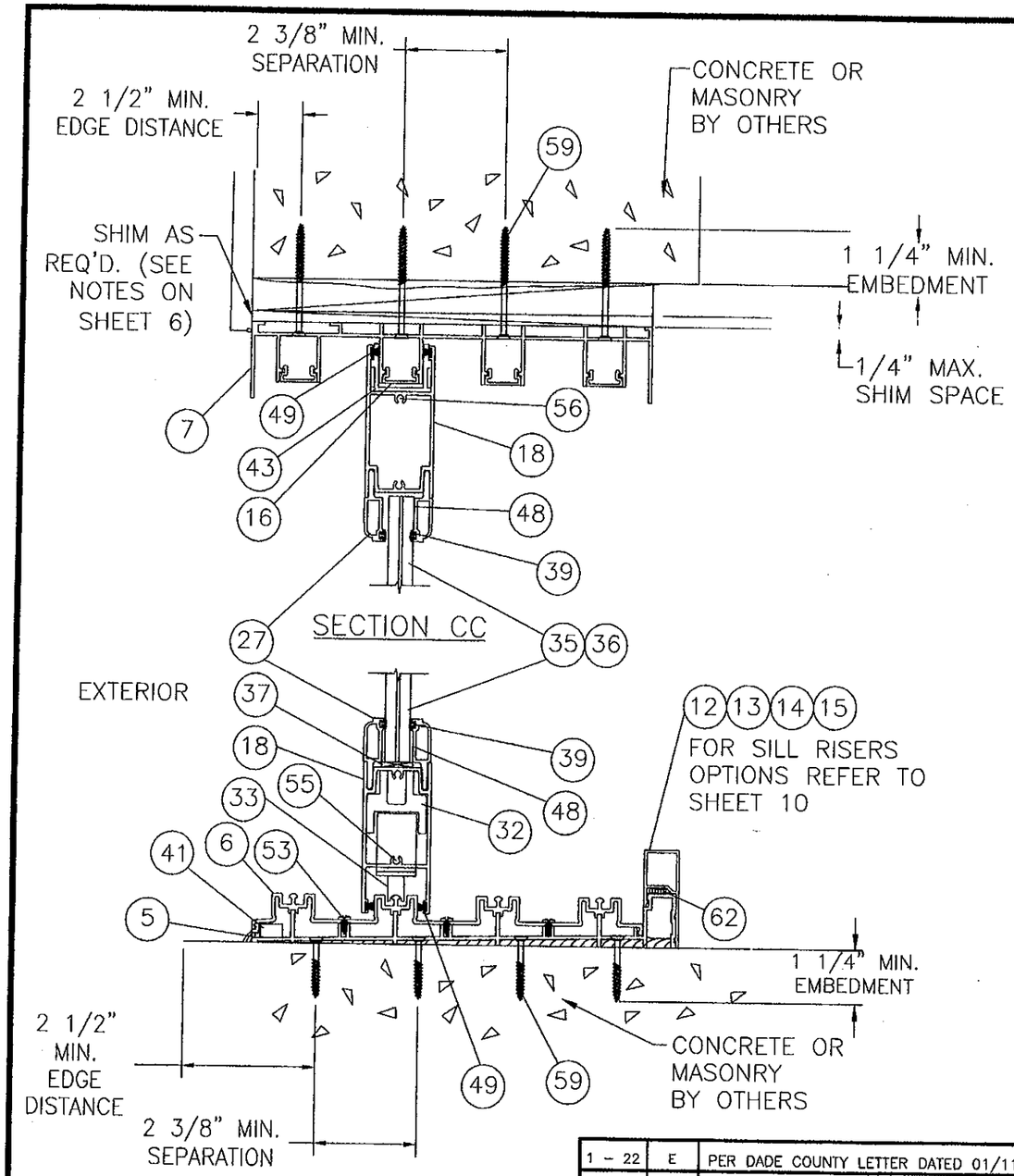

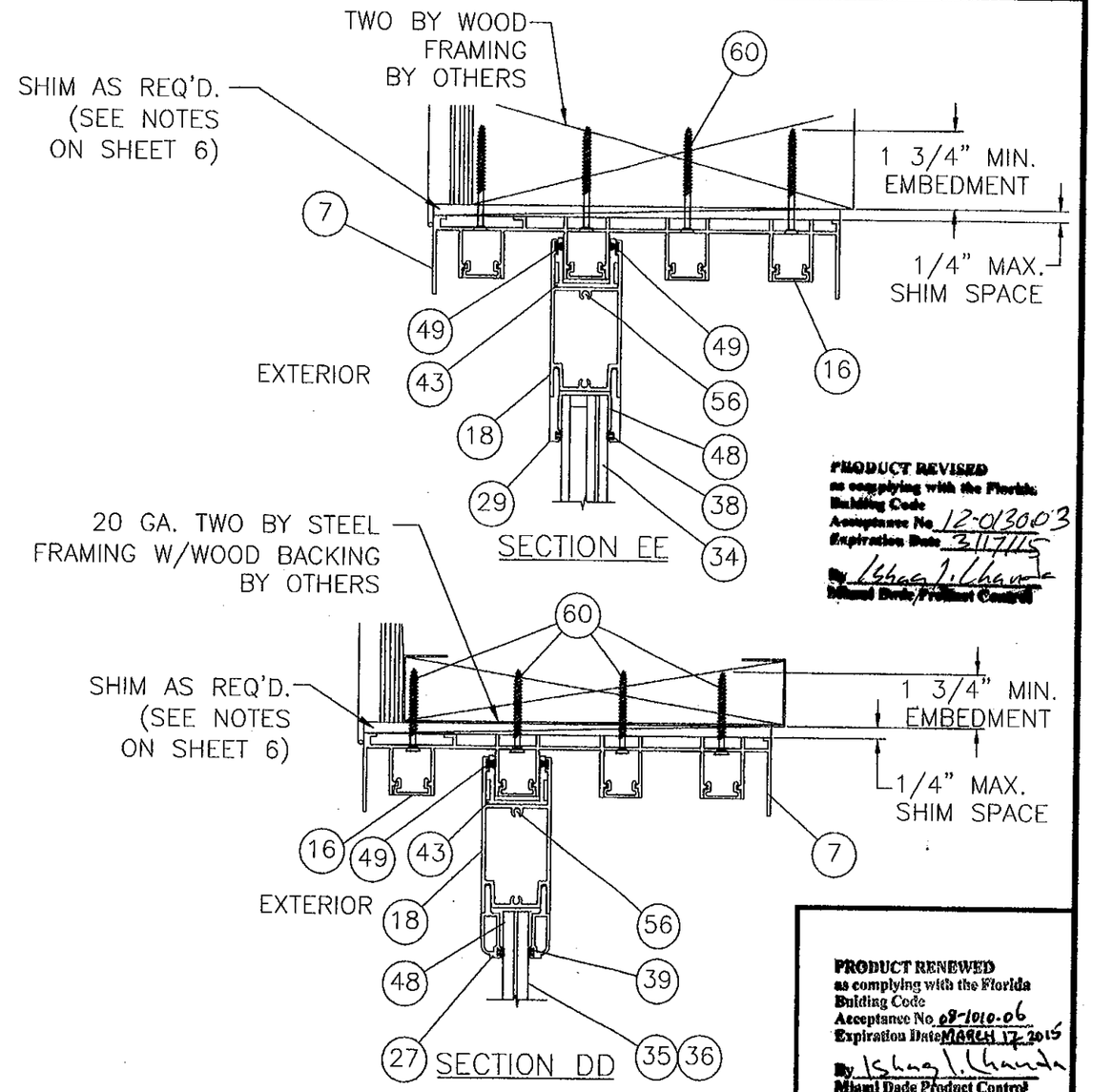

PRODUCT REVISED
as complying with the Florida Building Code
Acceptance No. 12-0130.03
Expiration Date 3.17.15
By Ishaq I. Chanda
Miami Dade Product Control Division

PRODUCT RENEWED
as complying with the Florida Building Code
Acceptance No. 09-1010.06
Expiration Date MARCH 17, 2015
By Ishaq I. Chanda
Miami Dade Product Control Division

SHEET	REV	DESCRIPTION	DATE	BY
REVISIONS				
1 – 22	E	PER DADE COUNTY LETTER DATED 01/11/10	01/12/10	TJH
1 – 22	D	PER DADE COUNTY LETTER DATED 10/06/09	10/12/09	TJH
1 – 23	C	PER DADE COUNTY LETTER DATED 01/15/09	03/13/09	TJH
	B	General revision and update to 2007 FBC	07/24/08	DRL
	A	Per Dade County letter dated 12/03/04	12/21/04	BB

LUIS R. LOMAS P.E.
FLORIDA REGISTRATION NO. 62514

WinDoor INCORPORATED
7500 AMSTERDAM DRIVE
ORLANDO, FL 32832
Phone: 407.481.8400
Fax: 407.481.0505
www.windoorinc.com

Dwg Title: SERIES 8000 POCKET, 90° & 135° SGD LM
VERTICAL CROSS SECTIONS 4'0 X 10'0 PANELS

SIZE	Drn By:	DWG NO.	REV
B	BB	WIND0082	E

SCALE N.T.S. | DATE: 09/13/04 | SHEET 12 OF 22

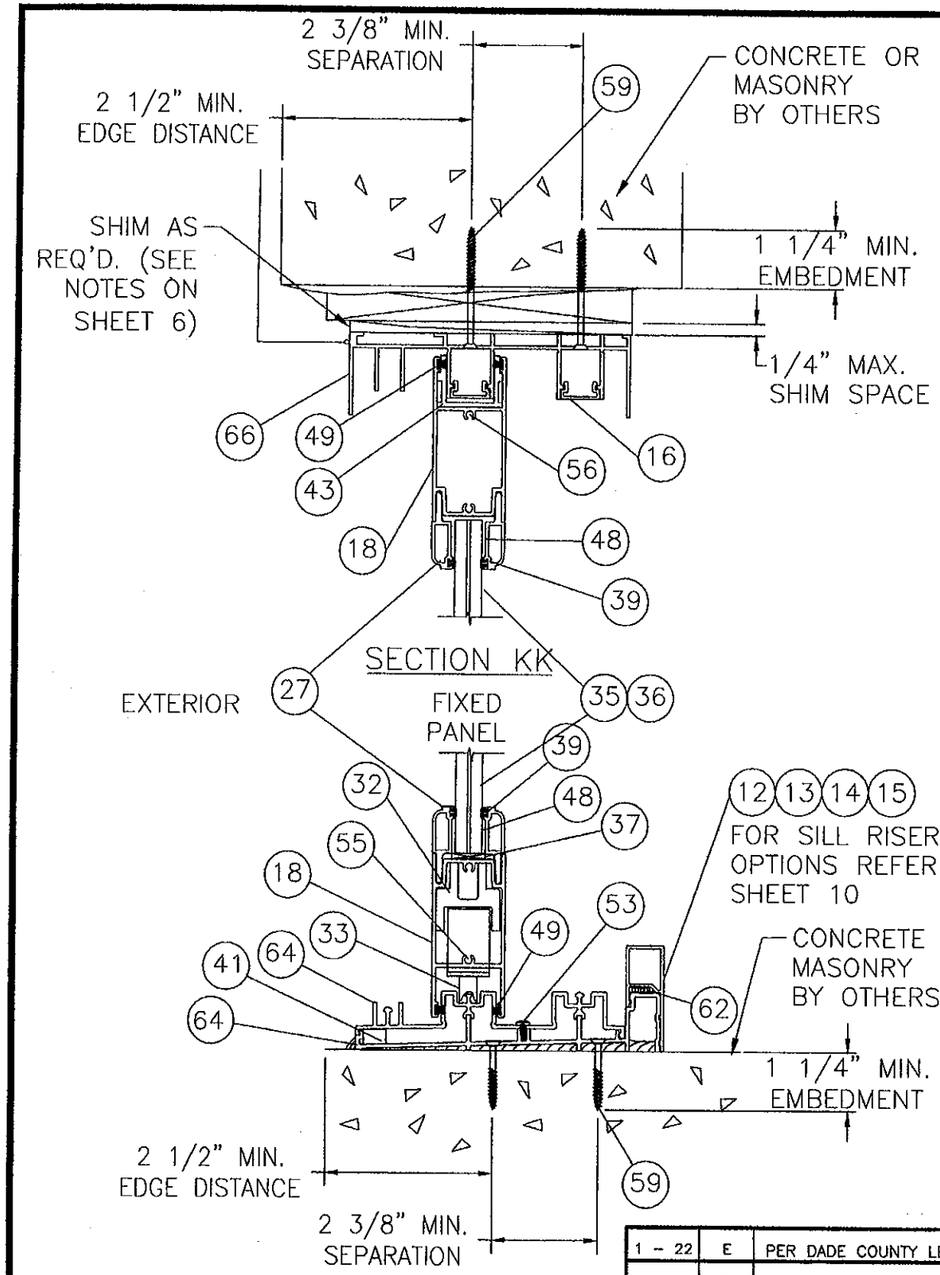

SECTION JJ

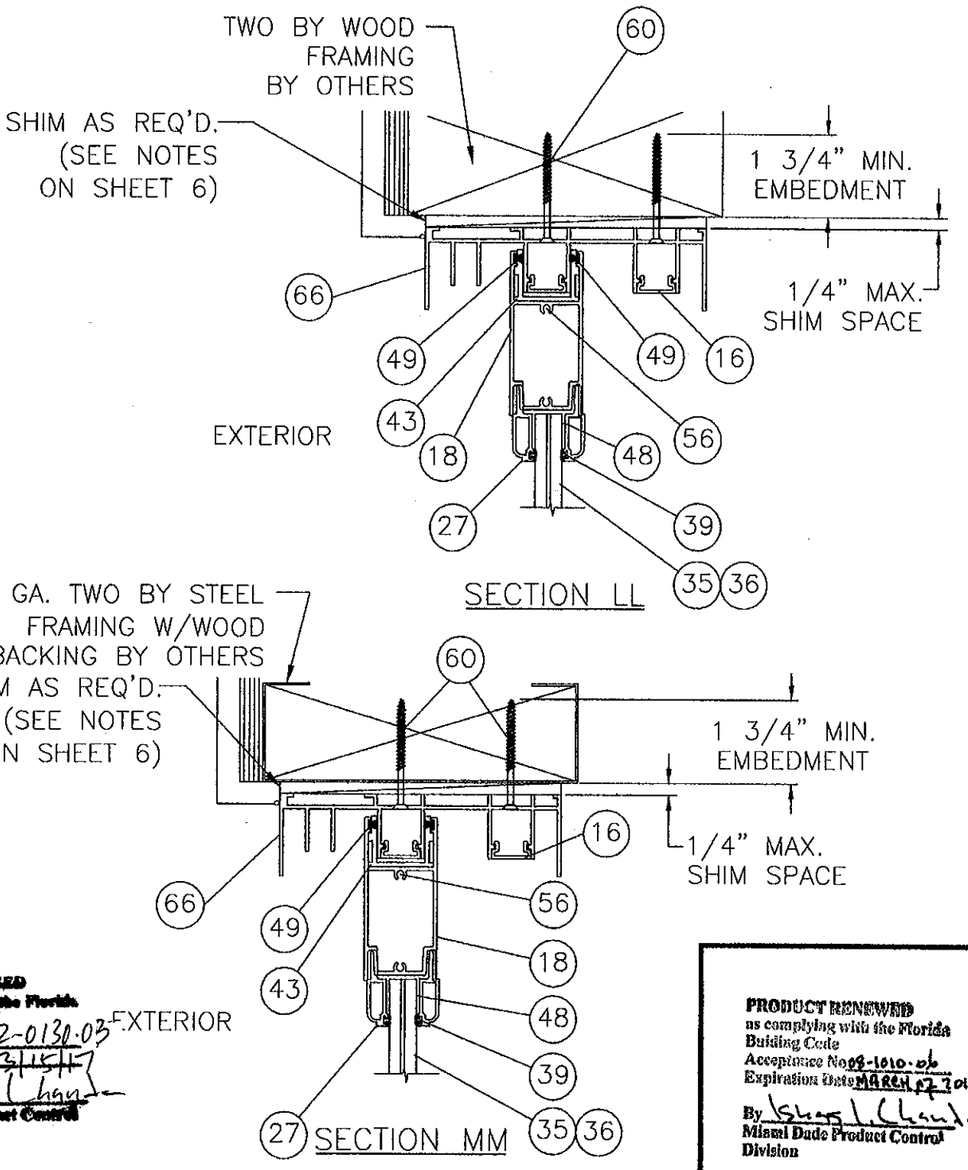

SECTION LL

SECTION MM

PRODUCT REVISED
as complying with the Florida Building Code
Acceptance No. 12-0130.03
Expiration Date 3/15/17
By Shag L. Chan
Miami Dade Product Control

PRODUCT RENEWED
as complying with the Florida Building Code
Acceptance No. 08-1010.06
Expiration Date MARCH 17 2015
By Shag L. Chan
Miami Dade Product Control Division

SHEET	REV	DESCRIPTION	DATE	BY
1 – 22	E	PER DADE COUNTY LETTER DATED 01/11/10	01/12/10	TJH
1 – 22	D	PER DADE COUNTY LETTER DATED 10/06/09	10/12/09	TJH
1 – 23	C	PER DADE COUNTY LETTER DATED 01/15/09	03/13/09	TJH
	B	General revision and update to 2007 FBC	07/24/08	DRL
	A	Per Dade County letter dated 12/03/04	12/21/04	BB

REVISIONS

LUIS R. LOMAS P.E.
Luis R. Lomas
2/1/10
FLORIDA REGISTRATION NO. 62514

WinDoor INCORPORATED
7500 AMSTERDAM DRIVE
ORLANDO, FL 32832
Phone: 407.481.8400
Fax: 407.481.0505
www.windoorinc.com

Dwg Title:
SERIES 8000 SGD LARGE MISSILE
VERTICAL CROSS SECTIONS 4'0 X 10'0 PANELS

SIZE	Drn By:	DWG NO.	REV
B	BB	WIND0082	E

SCALE N.T.S. | DATE: 09/13/04 | SHEET 13 OF 22

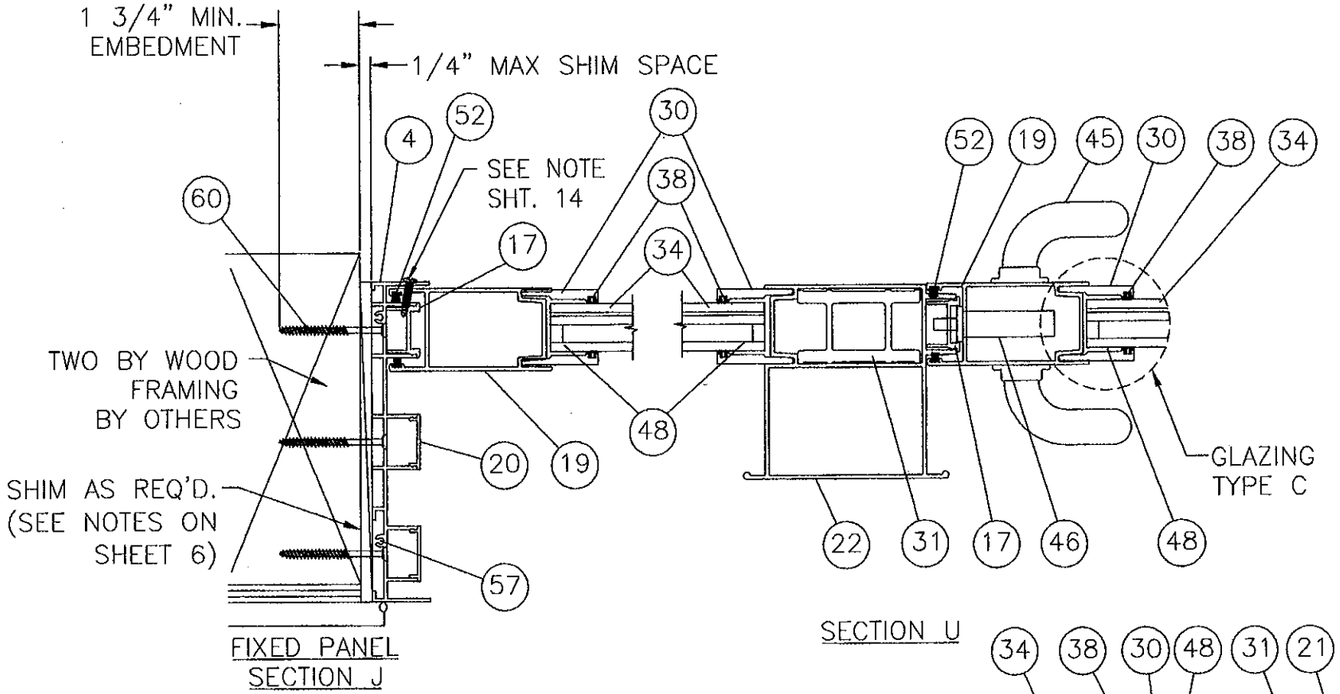

FIXED PANEL
SECTION J

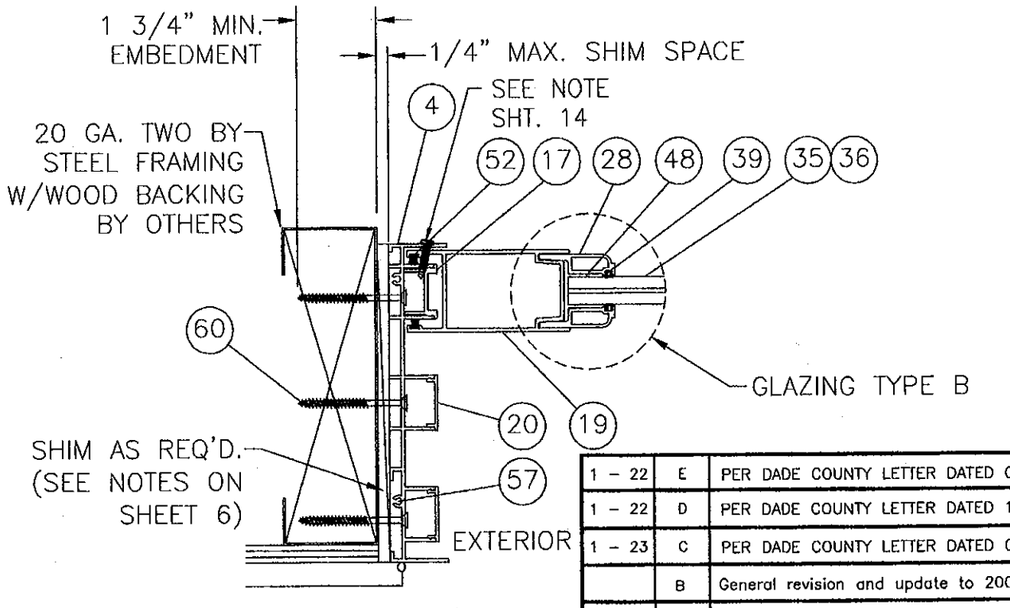

FIXED PANEL
SECTION K

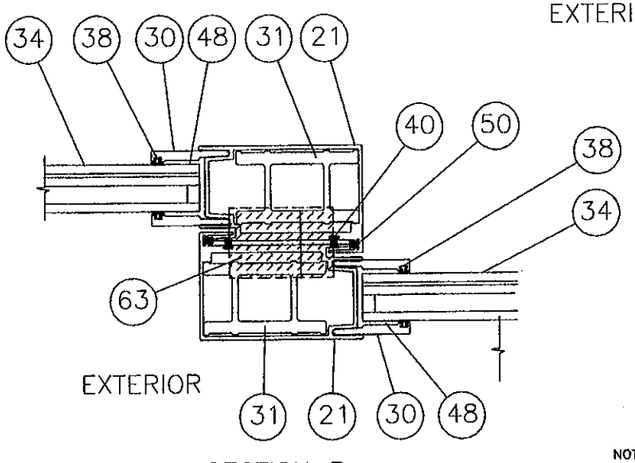

SECTION R
OPERABLE TO OPERABLE

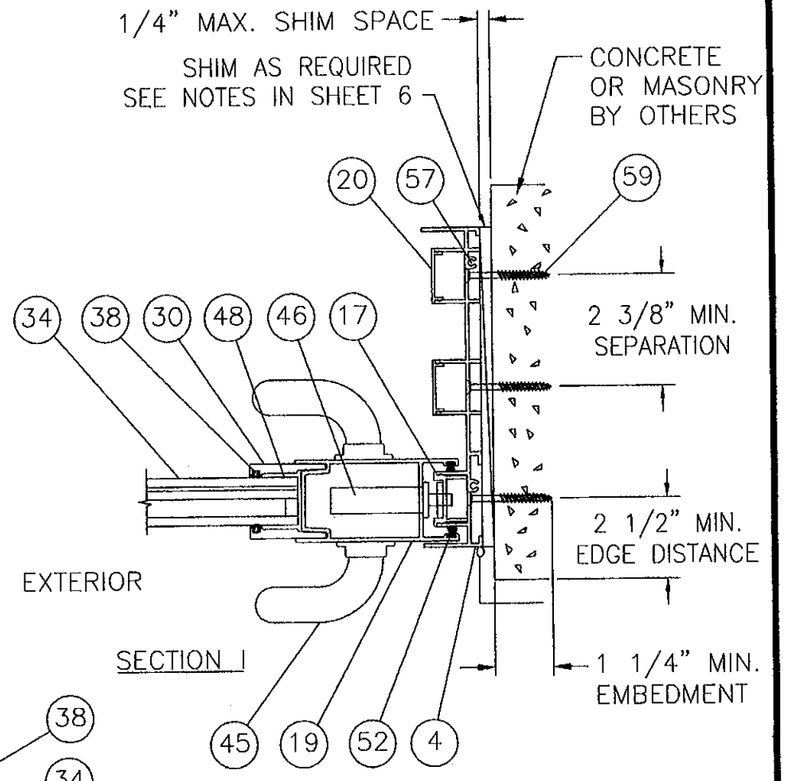

SECTION I

NOTE: (FIXED PANEL TO JAMB)
#8 x 3/4" SELF TAPPING TEK SCREW IS USED TO SECURE THE FIXED PANEL IN PLACE. (4) SCREWS ARE REQUIRED, 6" FROM TOP AND BOTTOM OF PANEL AND (2) MORE EQUALLY SPACED.

PRODUCT REVISED
as complying with the Florida Building Code
Acceptance No 12-0130.03
Expiration Date 3/17/15
By Ishaq I. Chanda
Miami Dade Product Control

PRODUCT RENEWED
as complying with the Florida Building Code
Acceptance No 08-1010.06
Expiration Date MARCH 17, 2015
By Ishaq I. Chanda
Miami Dade Product Control Division

SHEET	REV	DESCRIPTION	DATE	BY
1 - 22	E	PER DADE COUNTY LETTER DATED 01/11/10	01/12/10	TJH
1 - 22	D	PER DADE COUNTY LETTER DATED 10/06/09	10/12/09	TJH
1 - 23	C	PER DADE COUNTY LETTER DATED 01/15/09	03/13/09	TJH
	B	General revision and update to 2007 FBC	07/24/08	DRL
	A	Per Dade County letter doted 12/03/04	12/21/04	BB

REVISIONS

LUIS R. LOMAS P.E.
FLORIDA REGISTRATION NO. 62514

WinDoor INCORPORATED
7500 AMSTERDAM DRIVE
ORLANDO, FL 32832
Phone: 407.481.8400
Fax: 407.481.0505
www.windoorinc.com

Dwg Title:
SERIES 8000 SGD LARGE MISSILE
HORIZONTAL CROSS SECTIONS 4'0 X 10'0 PANELS

SIZE	Drn By:	DWG NO.	REV
B	BB	WIND0082	E

SCALE N.T.S. | DATE: 09/13/04 | SHEET 14 OF 22

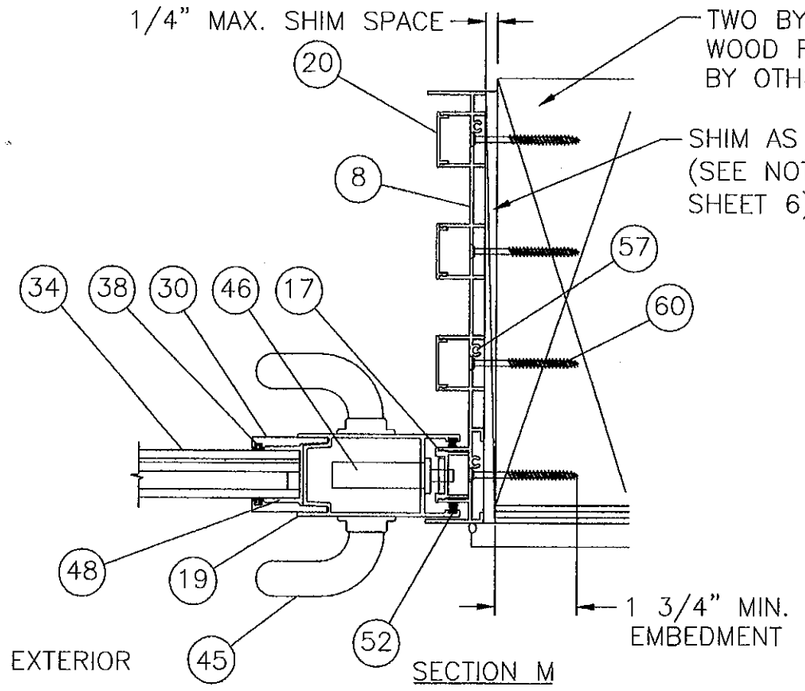

SECTION M

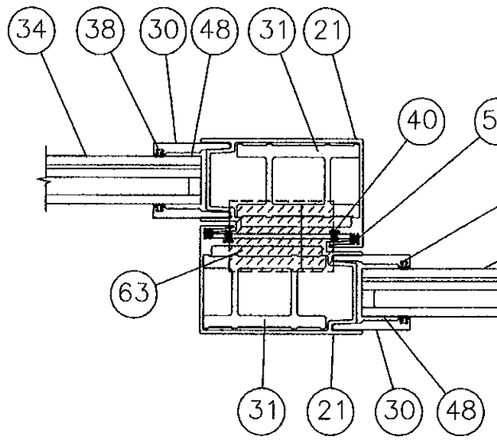

SECTION R
OPERABLE TO OPERABLE

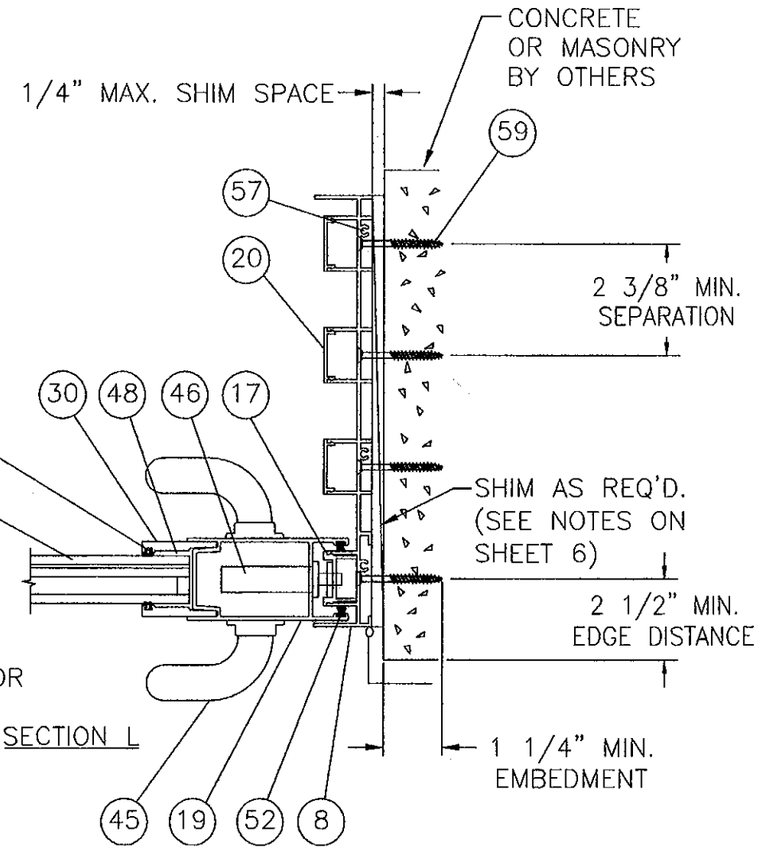

SECTION L

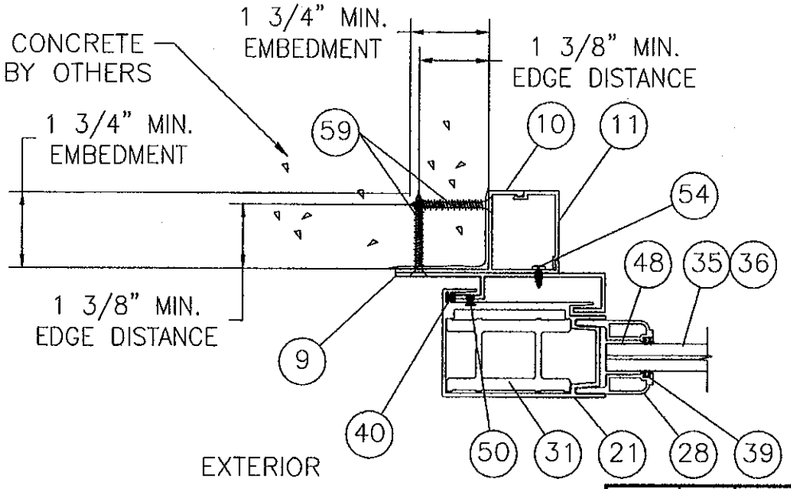

SECTION O

PRODUCT REVISED
as complying with the Florida Building Code
Acceptance No. 12-0130.03
Expiration Date 3/17/15
By Ishaq I. Chaudhry
Miami Dade Product Control

PRODUCT RENEWED
as complying with the Florida Buiding Code
Acceptance No. 09-1010.06
Expiration Date MARCH 17, 2015
By Ishaq I. Chaudhry
Miami Dade Product Control Division

SHEET	REV	DESCRIPTION	DATE	BY
1 – 22	E	PER DADE COUNTY LETTER DATED 01/11/10	01/12/10	TJH
1 – 22	D	PER DADE COUNTY LETTER DATED 10/06/09	10/12/09	TJH
1 – 23	C	PER DADE COUNTY LETTER DATED 01/15/09	03/13/09	TJH
	B	General revision and update to 2007 FBC	07/24/08	DRL
	A	Per Dade County letter dated 12/03/04	12/21/04	BB

REVISIONS

LUIS R. LOMAS P.E.
Luis R. Lomas
2/1/10
FLORIDA REGISTRATION NO. 62514

WinDoor INCORPORATED
7500 AMSTERDAM DRIVE
ORLANDO, FL 32832
Phone: 407.481.8400
Fax: 407.481.0505
www.windoorinc.com

Dwg Title:
SERIES 8000 POCKET SGD LARGE MISSILE
HORIZONTAL CROSS SECTIONS 4'0 X 10'0 PANELS

SIZE	Drn By:	DWG NO.	REV
B	BB	WIND0082	E

SCALE N.T.S. | DATE: 09/13/04 | SHEET 15 OF 22

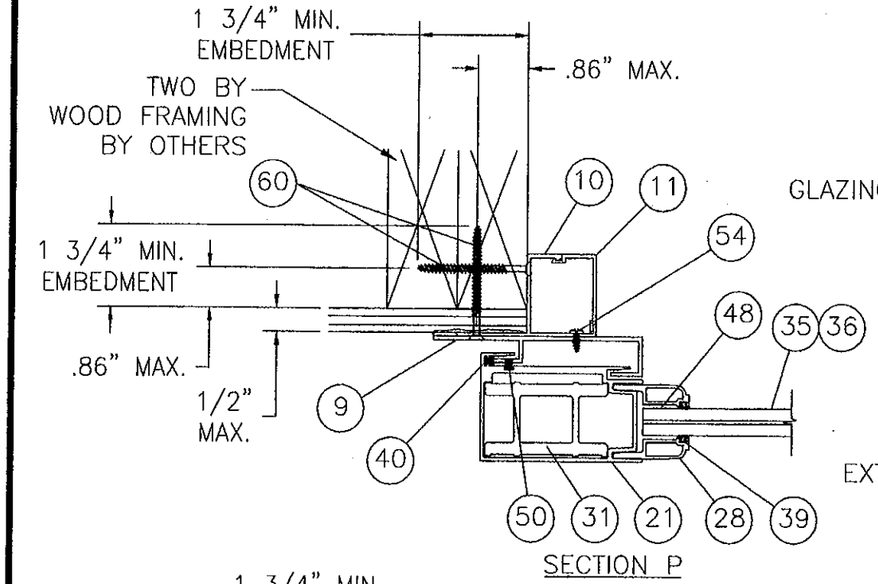

SECTION P

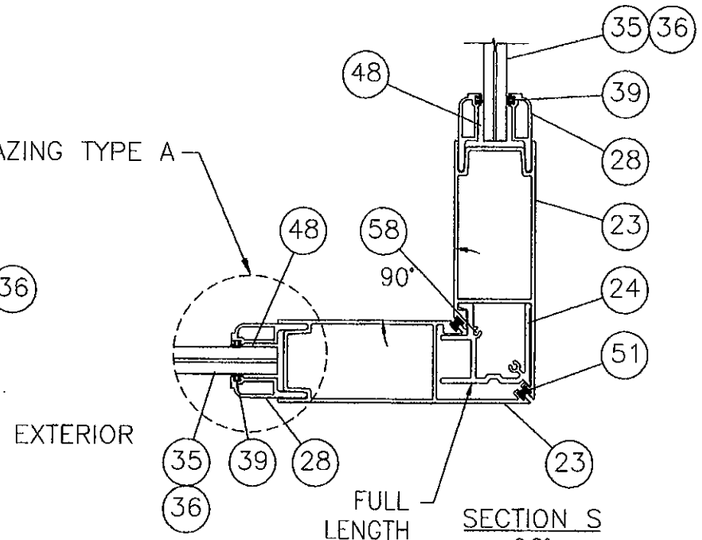

SECTION S
90°

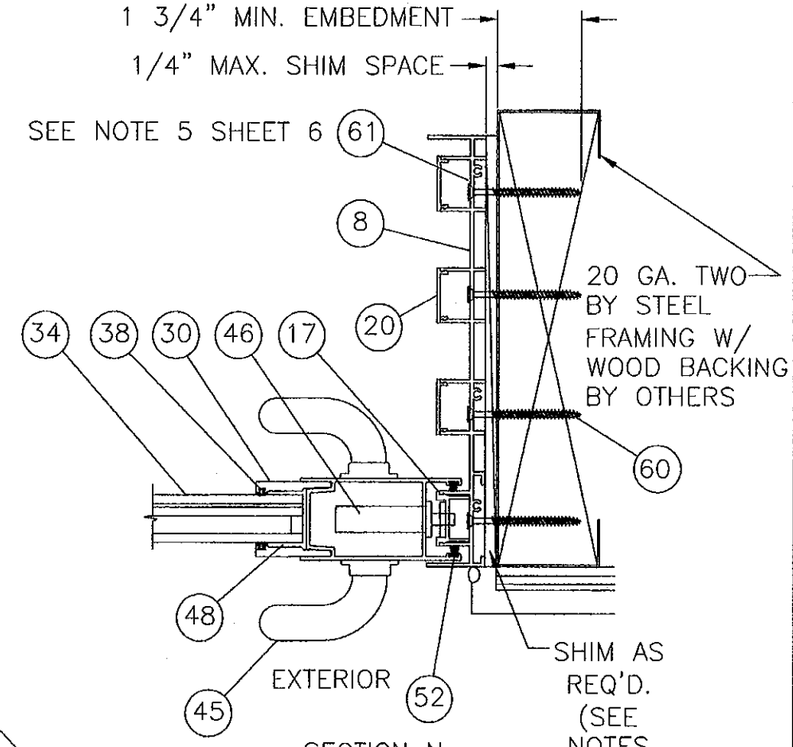

SECTION N

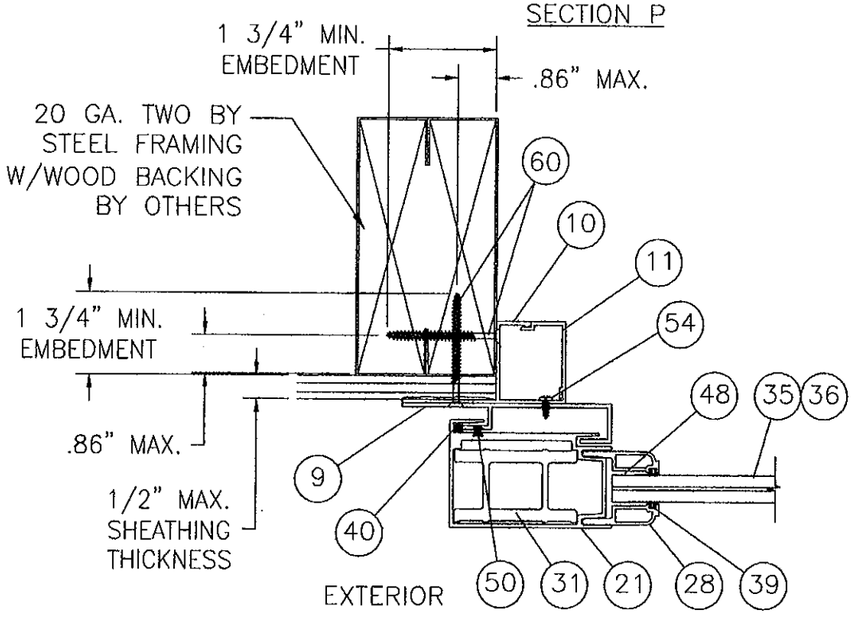

SECTION Q

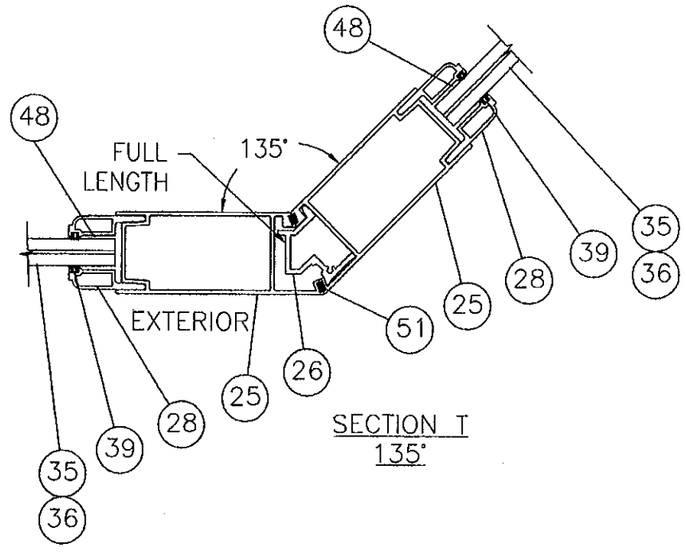

SECTION T
135°

PRODUCT REVISED
as complying with the Florida Building Code
Acceptance No. 12-0130-03
Expiration Date 3/17/15
By Ishaq I. Chanda
Miami Dade Product Control

PRODUCT RENEWED
as complying with the Florida Building Code
Acceptance No. 08-1010.06
Expiration Date MARCH 17, 2015
By Ishaq I. Chanda
Miami Dade Product Control Division

SHEET	REV	DESCRIPTION	DATE	BY
1 – 22	E	PER DADE COUNTY LETTER DATED 01/11/10	01/12/10	TJH
1 – 22	D	PER DADE COUNTY LETTER DATED 10/06/09	10/12/09	TJH
1 – 23	C	PER DADE COUNTY LETTER DATED 01/15/09	03/13/09	TJH
	B	General revision and update to 2007 FBC	07/24/08	DRL
	A	Per Dade County letter dated 12/03/04	12/21/04	BB

REVISIONS

LUIS R. LOMAS P.E.
9/1/10
FLORIDA REGISTRATION NO. 62514

WinDoor INCORPORATED
7500 AMSTERDAM DRIVE
ORLANDO, FL 32832
Phone: 407.481.8400
Fax: 407.481.0505
www.windoorinc.com

Dwg Title:
SERIES 8000 90° & 135° POCKET SGD LARGE MISSILE HORIZONTAL CROSS SECTIONS 4'0 X 10'0 PANELS

SIZE	Drn By:	DWG NO.	REV
B	BB	WIND0082	E

SCALE	DATE:	SHEET
N.T.S.	09/13/04	16 OF 22

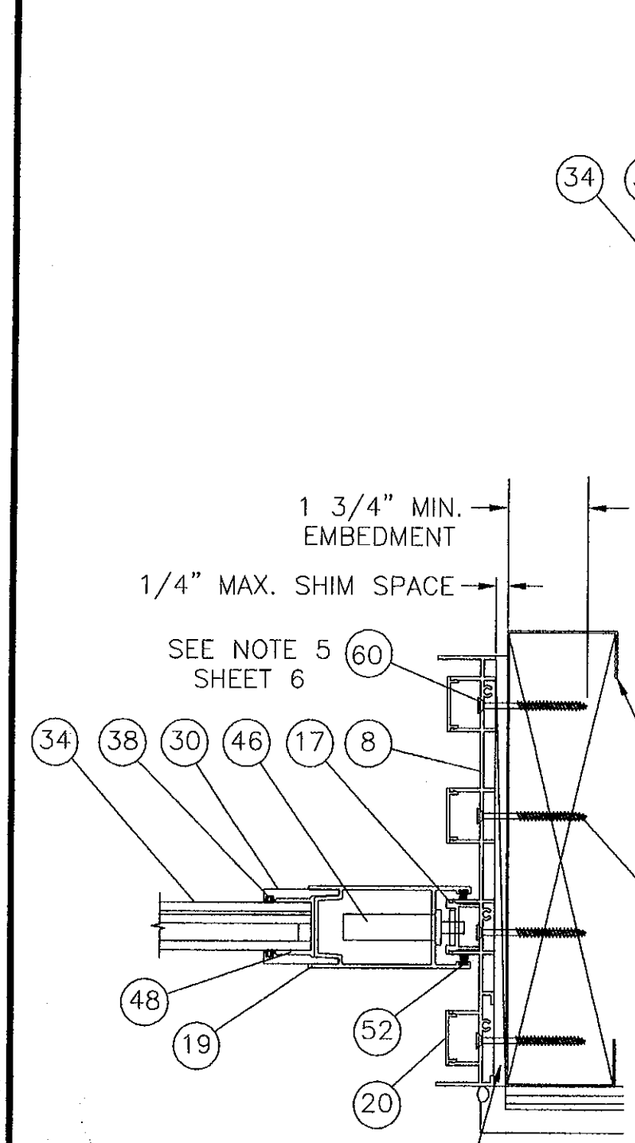

SECTION W

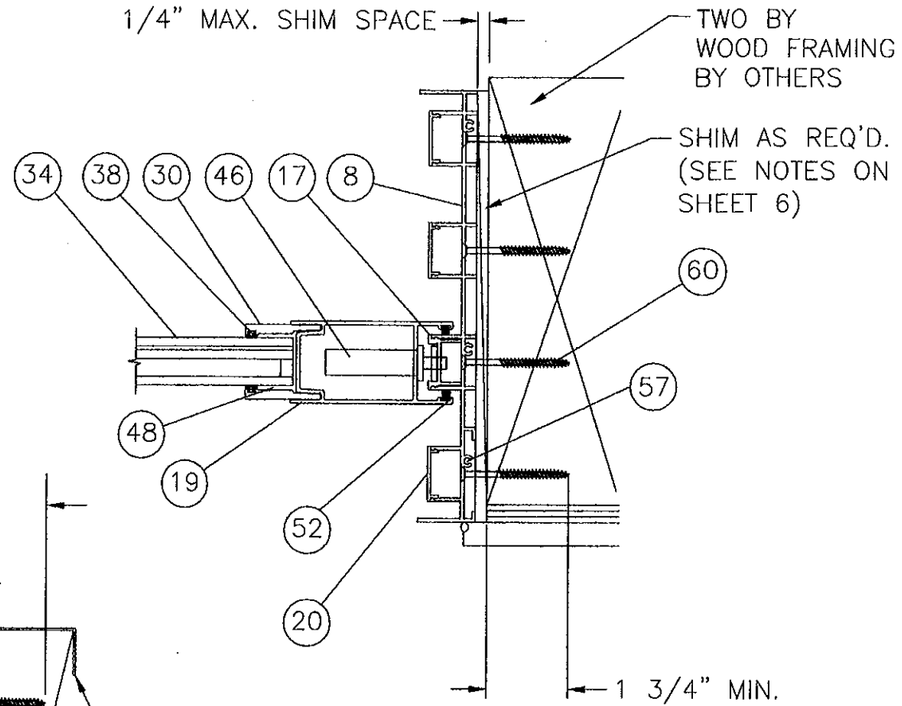

SECTION X

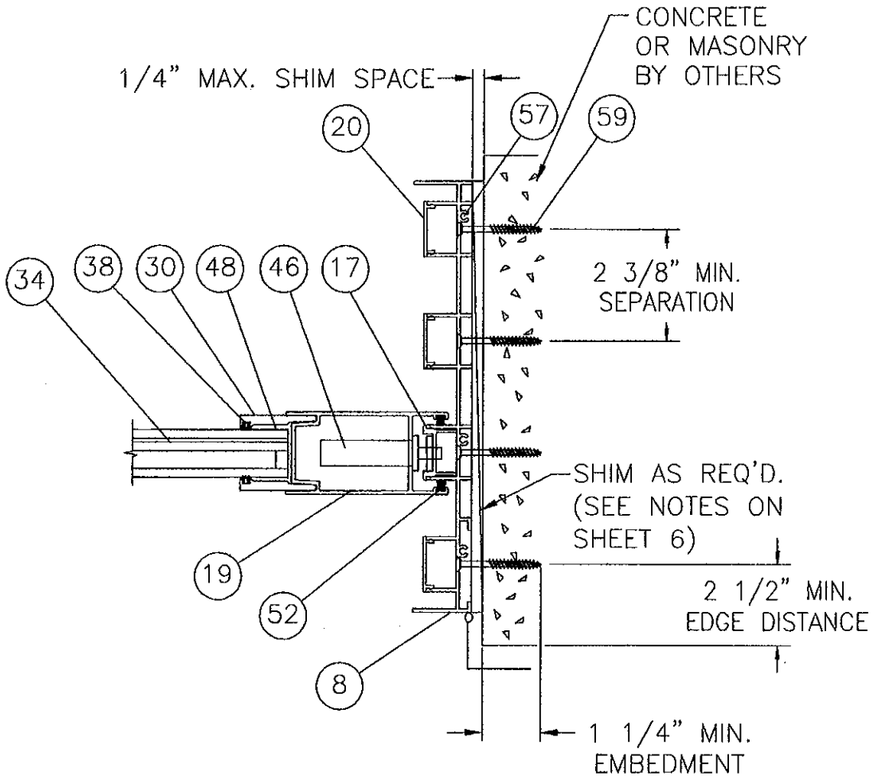

SECTION V

PRODUCT REVIEWED
as complying with the Florida
Building Code
Acceptance No 12-0130.03
Expiration Date 3/17/15
By
Miami Dade Product Control

PRODUCT RENEWED
as complying with the Florida
Buiding Code
Acceptance No 09-1010.06
Expiration Date MARCH 17 2015
By
Miami Dade Product Control
Division

SHEET	REV	DESCRIPTION	DATE	BY
1 – 22	E	PER DADE COUNTY LETTER DATED 01/11/10	01/12/10	TJH
1 – 22	D	PER DADE COUNTY LETTER DATED 10/06/09	10/12/09	TJH
1 – 23	C	PER DADE COUNTY LETTER DATED 01/15/09	03/13/09	TJH
	B	General revision and update to 2007 FBC	07/24/08	DRL
	A	Per Dade County letter dated 12/03/04	12/21/04	BB

REVISIONS

LUIS R. LOMAS P.E.
2/1/10
FLORIDA REGISTRATION
NO. 62514

WinDoor
INCORPORATED
7500 AMSTERDAM DRIVE
ORLANDO, FL 32832
Phone: 407.481.8400
Fax: 407.481.0505
www.windoorinc.com

Dwg Title:
SERIES 8000 POCKET SGD LARGE MISSILE
HORIZONTAL CROSS SECTIONS 4'0 X 10'0 PANELS

SIZE	Drn By:	DWG NO.	REV
B	BB	WIND0082	E

SCALE N.T.S. | DATE: 09/13/04 | SHEET 17 OF 22

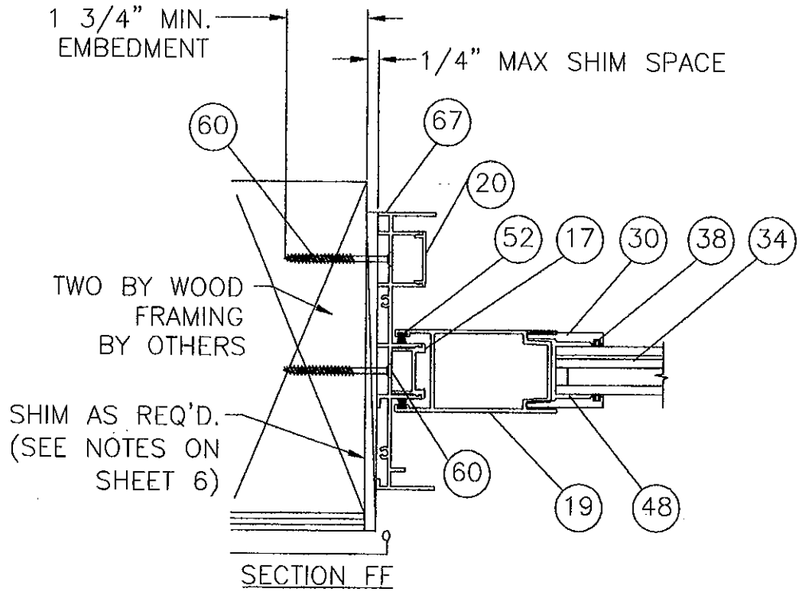

SECTION FF

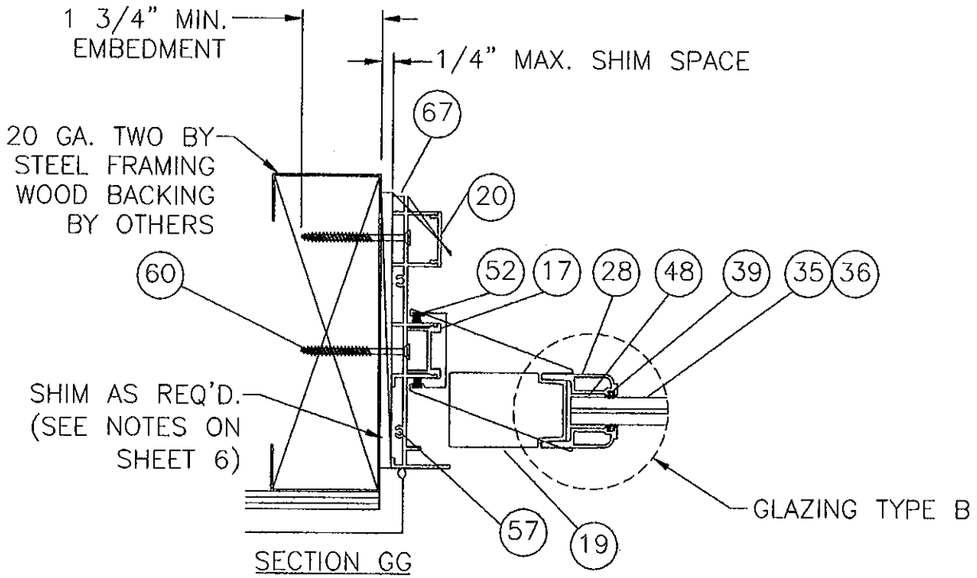

SECTION GG

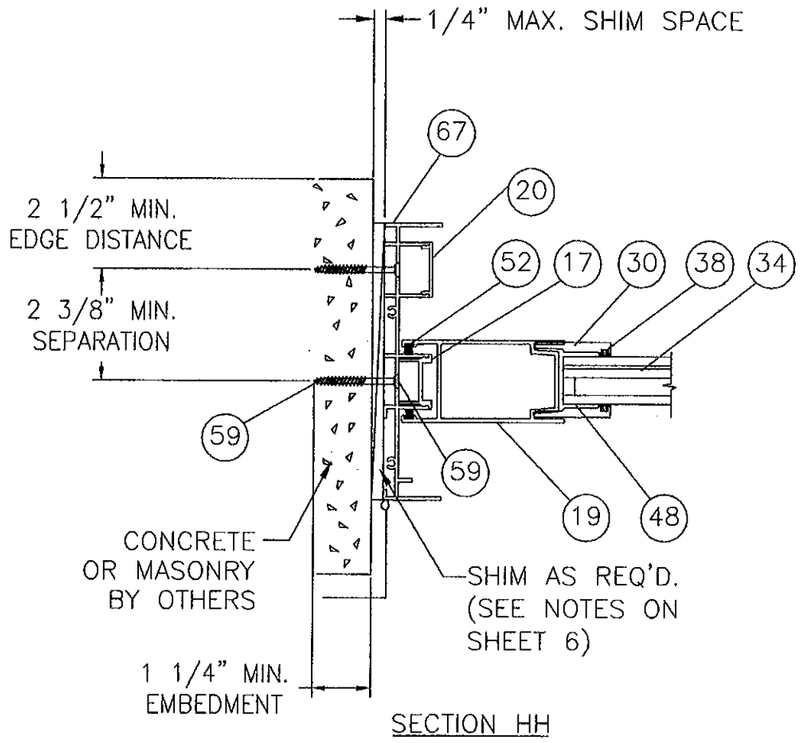

SECTION HH

PRODUCT REVISED
as complying with the Florida Building Code
Acceptance No. 12-0130.03
Expiration Date MAR 17, 2015
By Ishaq I. Chanda
Miami Dade Product Control

PRODUCT RENEWED
as complying with the Florida Building Code
Acceptance No. 08-1010.06
Expiration Date MARCH 17, 2015
By Ishaq I. Chanda
Miami Dade Product Control Division

SHEET	REV	DESCRIPTION	DATE	BY
1 – 22	E	PER DADE COUNTY LETTER DATED 01/11/10	01/12/10	TJH
1 – 22	D	PER DADE COUNTY LETTER DATED 10/06/09	10/12/09	TJH
1 – 23	C	PER DADE COUNTY LETTER DATED 01/15/09	03/13/09	TJH
	B	General revision and update to 2007 FBC	07/24/08	DRL
	A	Per Dade County letter dated 12/03/04	12/21/04	BB

REVISIONS

LUIS R. LOMAS P.E.
FLORIDA REGISTRATION
NO. 62514

WinDoor INCORPORATED
7500 AMSTERDAM DRIVE
ORLANDO, FL 32832
Phone: 407.481.8400
Fax: 407.481.0505
www.windoorinc.com

Dwg Title:
SERIES 8000 SGD LARGE MISSILE
HORIZONTAL CROSS SECTIONS 4'0 X 10'0 PANELS

SIZE	Drn By:	DWG NO.	REV
B	BB	WIND0082	E

SCALE N.T.S. | DATE: 09/13/04 | SHEET 18 OF 23

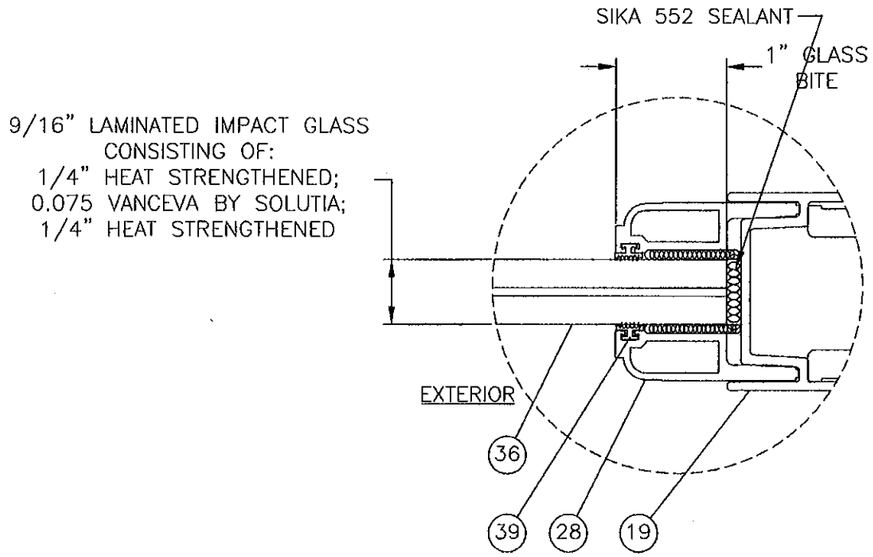

GLAZING TYPE A
SINGLE GLAZING

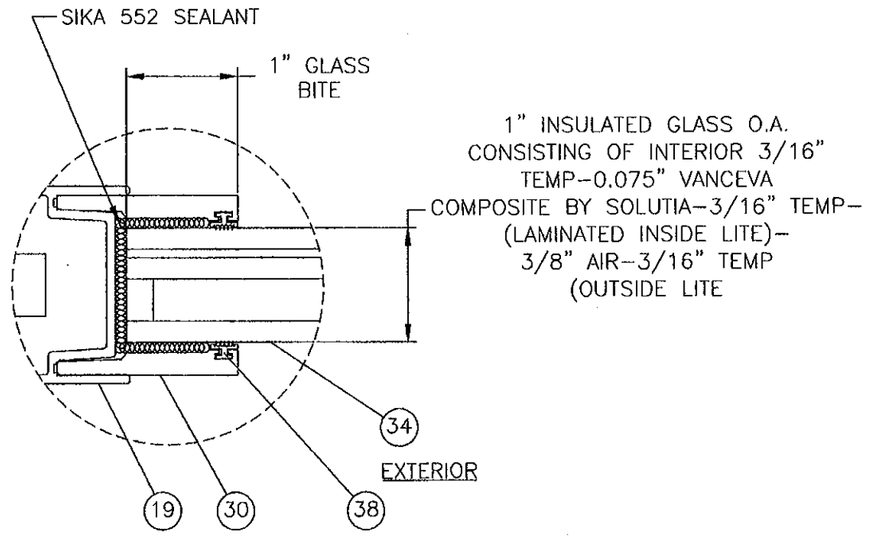

GLAZING TYPE C
INSULATING GLASS

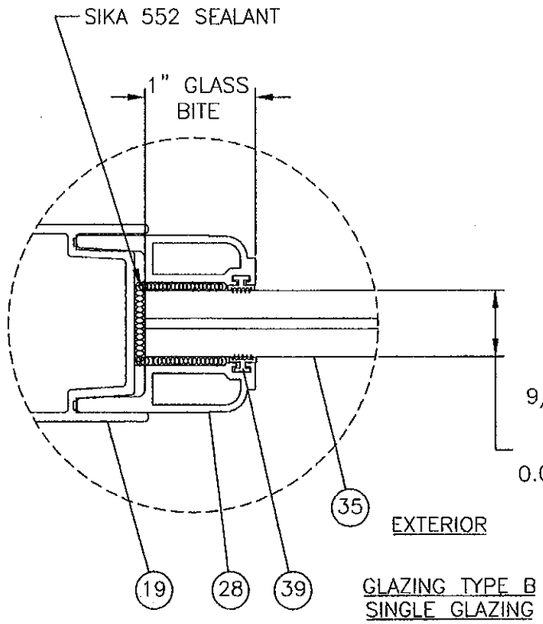

GLAZING TYPE B
SINGLE GLAZING

PRODUCT REVISED
as complying with the Florida Building Code
Acceptance No. 12-0130.03
Expiration Date 3/17/15
By Ishaq I. Chanda
Miami Dade Product Control

PRODUCT RENEWED
as complying with the Florida Building Code
Acceptance No. 08-1010.06
Expiration Date MARCH 17, 2015
By Ishaq I. Chanda
Miami Dade Product Control Division

SHEET	REV	DESCRIPTION	DATE	BY
1 – 22	E	PER DADE COUNTY LETTER DATED 01/11/10	01/12/10	TJH
1 – 22	D	PER DADE COUNTY LETTER DATED 10/06/09	10/12/09	TJH
1 – 23	C	PER DADE COUNTY LETTER DATED 01/15/09	03/13/09	TJH
	B	General revision and update to 2007 FBC	07/24/08	DRL
	A	Per Dade County letter dated 12/03/04	12/21/04	BB

REVISIONS

LUIS R. LOMAS P.E.
Luis R. Lomas
2/1/10
FLORIDA REGISTRATION
NO. 62514

WinDoor INCORPORATED
7500 AMSTERDAM DRIVE
ORLANDO, FL 32832
Phone: 407.481.8400
Fax: 407.481.0505
www.windoorinc.com

Dwg Title:
SERIES 8000 SGD LARGE MISSILE
GLAZING DETAILS 4'0 X 10'0 PANELS

SIZE	Drn By:	DWG NO.	REV
B	BB	WIND0082	E

SCALE	DATE:	SHEET
N.T.S.	09/13/04	19 OF 22

BILL OF MATERIAL			
NO.	PART NO.	DESCRIPTION	
1	FS02182	3 TRACK FRAME SILL PAN	BY KEYMARK A6063-T5
2	FS02183	3 TRACK FRAME SILL INSERT	BY KEYMARK A6063-T5
3	F302180	3 TRACK FRAME HEAD	BY KEYMARK A6063-T6
4	FS02181	3 TRACK FRAME JAMB	BY KEYMARK A6063-T6
5	FS02069	4 TRACK SILL PAN	BY KEYMARK A6063-T6
6	FS02184	4 TRACK SILL INSERT	BY KEYMARK A6063-T6
7	FS02071	4 TRACK FRAME HEAD	BY KEYMARK A6063-T6
8	FS02070	4 TRACK FRAME JAMB	BY KEYMARK A6063-T6
9	FS02173	POCKET DOOR HOOK STRIP	BY KEYMARK A6063-T6
10	FS02301	POCKET DOOR HOOK STRIP BASE	BY KEYMARK A6063-T6
11	FS02172	POCKET DOOR HOOK STRIP BASE COVER	BY KEYMARK A6063-T6
12	FH02939	4 1/4" SILL RISER ADD ON	BY KEYMARK A6063-T6
13	FH02626	3 1/2" SILL RISER ADD ON	BY KEYMARK A6063-T6
14	FH02813	3" SILL RISER ADD ON	BY KEYMARK A6063-T6
15	FH02625	2 1/4" SILL RISER ADD ON	BY KEYMARK A6063-T6
16	FS1882	FRAME HEAD INSERT	BY KEYMARK A6063-T6
17	FS02726	STILE JAMB INSERT	BY KEYMARK A6063-T6
18	FH01869	TOP & BOTTOM RAIL	BY KEYMARK A6063-T5
19	FH01871	LOCK STILE	BY KEYMARK A6063-T5
20	FS1883	FRAME JAMB INSERT	BY KEYMARK A6063-T5
21	FH02491	PANEL INTERLOCK STILE	BY KEYMARK A6063-T6
22	FH02165	FEMALE BUTT STILE	BY KEYMARK A6063-T5
23	FH02025	90° CORNER STILE	BY KEYMARK A6063-T5
24	FH02026	90° CORNER STILE CLIP	BY KEYMARK A6063-T5
25	FH02157	135° CORNER STILE	BY KEYMARK A6063-T5
26	FH02158	135° CORNER STILE CLIP	BY KEYMARK A6063-T6
27	FH01877	9/16" HORIZONTAL GLASS STOP	BY KEYMARK A6063-T5
28	FH01878	9/16" VERTICAL GLASS STOP	BY KEYMARK A6063-T5
29	FH01879	1" HORIZONTAL GLASS STOP	BY KEYMARK A6063-T5
30	FH01880	1" VERTICAL GLASS STOP	BY KEYMARK A6063-T5
31	FH02641	REINFORCING BAR	BY KEYMARK ~~A6063-T6~~ 6061-T6
32	FS02643	ROLL BACKUP	
33	#1988-9000	TANDEM ROLLER	
34		1" CLEAR TEMPERED INSULATING LAMINATED 0.075 VANCEVA	
35		9/16" LAMINATED CLEAR HEAT STRENGTHENED SENTRY GLASS PLUS	
36		9/16" LAMINATED CLEAR HEAT STRENGTHENED 0.075 VANCEVA	
37	NSB 3/16-3/4-2	GLASS SETTING BLOCK	
38	TP991	1" INSULATED/ IMPACT GLASS STOP VINYL	
39	TP870	9/16" IMPACT GLASS STOP VINYL	
40	TP876	INTERLOCK BUMPER	
41	BF04122-1	WEEP HOLE BAFFLES	
42	NRAHP	PANEL HEIGHT ADJUSTMENT PLUGS	
43	NPG	NYLON PANEL GUIDE	
44	V998B	GLAZING TAPE 1/4" X 3/8"	

8
4/12/12

BILL OF MATERIAL		
NO.	PART NO.	DESCRIPTION
45	1414	OLYMPUS HANDLE SET
46	2468	DUAL POINT MORTISE LOCK & KEEPER SET
47	1413	OLYMPUS DUMMY HANDLE SET
48	SIKA 552	WET GLAZE
49	W33351NK0000	TOP & BOTTOM RAIL FINSEAL 0.187 X 0.350
50	W33221NK0000	INTERLOCK FINSEAL 0.187 X 0.220
51	W13131NK0000	CORNER STILE FINSEAL 0.187 X 0.130
52		PANEL STILE FINSEAL 0.187 X 0.220
53		SILL ASSY. SCREW #8 X 1/4 PH TYPE F SS
54		HOOK ATTACHMENT SCREW
55		ROLLER INSTAL. SCREWS #8 X 5/8 X 5/8 PH TYPE F SS
56		PANEL ASSEMBLY SCREW #10 X 1 1/4 TYPE F SS
57		FRAME ASSEMBLY SCREW #8 X 5/8 PH TYPE F SS
58		CORNER STILE INSERT SCREW #8 X 2" F.H. SMS TYPE A SS
59		1/4" DIA. ITW TAPCON
60		#14 CUT THREAD WOOD SCREW
62		SILICONE CAULK
63	P7569AM	.750" HIGH X 1.50" X 2.25" DUAL FINNED DUST PAD
64	FS01884	2 TRACK FRAME SILL PAN BY KEYMARK A6063-T5
65	FS01885	2 TRACK FRAME SILL INSERT BY KEYMARK A6063-T5
66	FS01846	2 TRACK FRAME HEAD BY KEYMARK A6063-T6
67	FS01845	2 TRACK FRAME JAMB BY KEYMARK A6063-T6

PRODUCT REVISED
as complying with the Florida Building Code
Acceptance No 12-0130.03
Expiration Date 3.17.15
By Ishaq I. Chaudhry
Miami Dade Product Control

PRODUCT RENEWED
as complying with the Florida Building Code
Acceptance No 08-1010.06
Expiration Date MARCH 17, 2015
By Ishaq I. Chaudhry
Miami Dade Product Control Division

SHEET	REV	DESCRIPTION	DATE	BY
1 - 22	E	PER DADE COUNTY LETTER DATED 01/11/10	01/12/10	TJH
1 - 22	D	PER DADE COUNTY LETTER DATED 10/06/09	10/12/09	TJH
1 - 23	C	PER DADE COUNTY LETTER DATED 01/15/09	03/13/09	TJH
	B	General revision and update to 2007 FBC	07/24/08	DRL
	A	Per Dade County letter dated 12/03/04	12/21/04	BB

REVISIONS

LUIS R. LOMAS P.E.
2/1/10
FLORIDA REGISTRATION NO. 62514

WinDoor INCORPORATED
7500 AMSTERDAM DRIVE
ORLANDO, FL 32832
Phone: 407.481.8400
Fax: 407.481.0505
www.windoorinc.com

Dwg Title:
SERIES 8000 SGD LARGE MISSILE
BILL OF MATERIALS 4'0 X 10'0 PANELS

SIZE	Drn By:	DWG NO.	REV
B	BB	WIND0082	E

SCALE	DATE:	SHEET
N.T.S.	09/13/04	20 OF 22

3 TRACK FRAME SILL PAN TYP. WALL THICKNESS 0.080

(1)

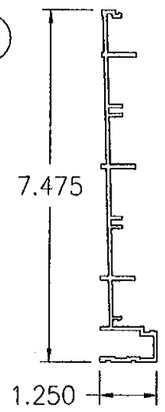

3 TRACK FRAME SILL INSERT TYP. WALL THICKNESS 0.075

(2)

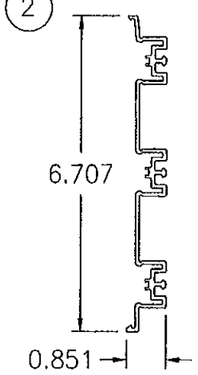

3 TRACK FRAME HEAD TYP. WALL THICKNESS 0.075

(3)

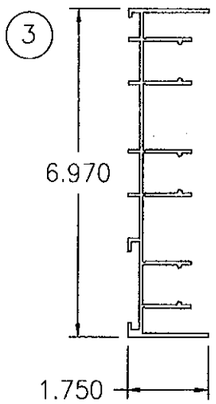

3 TRACK FRAME JAMB TYP. WALL THICKNESS 0.075

(4)

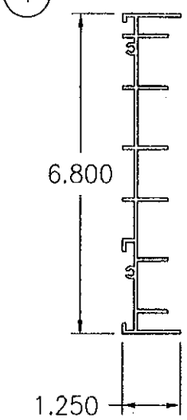

2 TRACK FRAME SILL PAN TYP. WALL THICKNESS 0.080

(64)

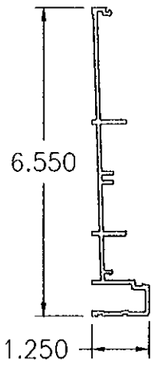

2 TRACK FRAME SILL INSERT TYP. WALL THICKNESS 0.075

(65)

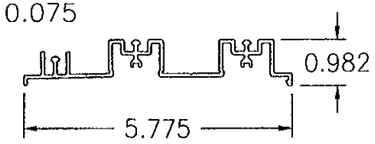

2 TRACK FRAME HEAD TYP. WALL THICKNESS 0.075

(66)

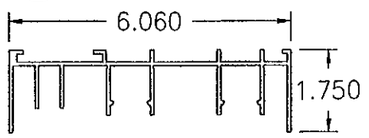

(5) 4 TRACK FRAME SILL PAN TYP. WALL THICKNESS 0.080

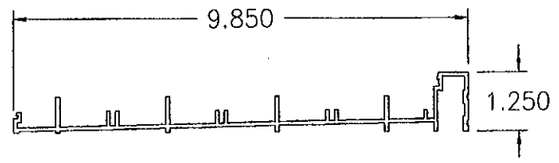

(6) 4 TRACK FRAME SILL INSERT TYP. WALL THICKNESS 0.075

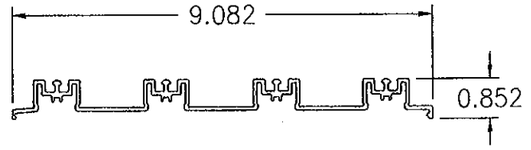

4 TRACK FRAME HEAD TYP. WALL THICKNESS 0.075

(7)

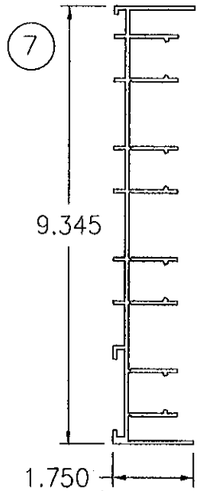

4 TRACK FRAME JAMB TYP. WALL THICKNESS 0.075

(8)

2 TRACK FRAME JAMB TYP. WALL THICKNESS 0.075

(67)

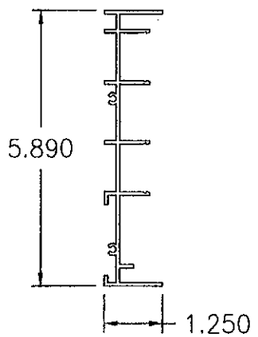

(9) HOOK STRIP TYP. WALL THICKNESS 0.080

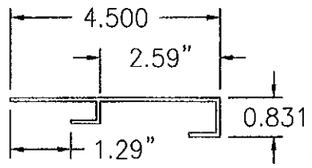

HOOK BASE TYP. WALL THICKNESS 0.075

(10)

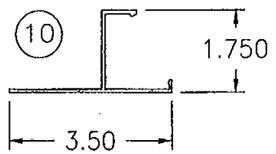

HOOK BASE COVER TYP. WALL THICKNESS 0.075

(11)

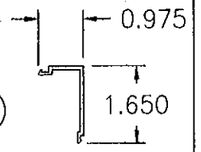

4 1/4" SILL RISER ADD ON TYP. WALL THICKNESS 0.060

(12)

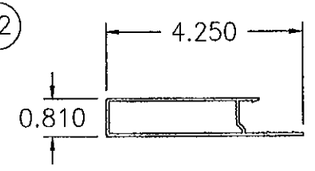

3 1/2" SILL RISER ADD ON TYP. WALL THICKNESS 0.060

(13)

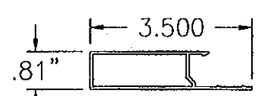

3" SILL RISER ADD ON TYP. WALL THICKNESS 0.060

(14)

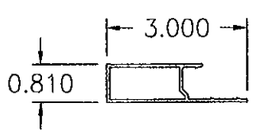

2 1/4" SILL RISER ADD ON TYP. WALL THICKNESS 0.060

(15)

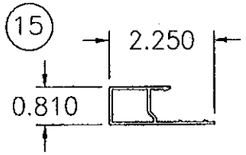

FRAME HEAD INSERT TYP. WALL THICKNESS 0.060

(16)

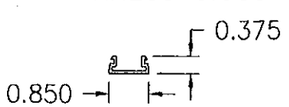

FRAME JAMB INSERT TYP. WALL THICKNESS 0.060

(20)

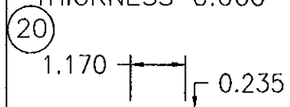

PRODUCT REVISED
as complying with the Florida Building Code
Acceptance No 12-0130.03
Expiration Date 3/17/15
By Ishaq I. Chaud
Miami Dade Product Control

PRODUCT RENEWED
as complying with the Florida Building Code
Acceptance No 08-1010.06
Expiration Date MAR 17, 2015
By Ishaq I. Chaud
Miami Dade Product Control Division

SHEET	REV	DESCRIPTION	DATE	BY
1 – 22	E	PER DADE COUNTY LETTER DATED 01/11/10	01/12/10	TJH
1 – 22	D	PER DADE COUNTY LETTER DATED 10/06/09	10/12/09	TJH
1 – 23	C	PER DADE COUNTY LETTER DATED 01/15/09	03/13/09	TJH
	B	General revision and update to 2007 FBC	07/24/08	DRL
	A	Per Dade County letter dated 12/03/04	12/21/04	BB

REVISIONS

LUIS R. LOMAS P.E.
2/1/10
FLORIDA REGISTRATION NO. 62514

WinDoor INCORPORATED
7500 AMSTERDAM DRIVE
ORLANDO, FL 32832
Phone: 407.481.8400
Fax: 407.481.0505
www.windoorinc.com

Dwg Title:
SERIES 8000 SGD LARGE MISSILE COMPONENTS 4'0 X 10'0 PANELS

SIZE	Drn By:	DWG NO.	REV
B	BB	WIND0082	E

SCALE N.T.S. | DATE: 09/13/04 | SHEET 21 OF 22

TOP & BOTTOM RAIL
TYP. WALL
THICKNESS 0.080

(18)

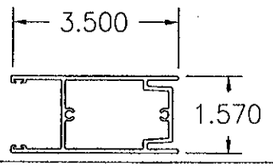

LOCK STILE
TYP. WALL
THICKNESS 0.080

(19)

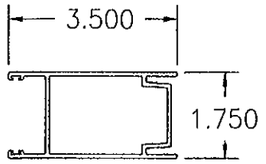

STILE JAMB INSERT
TYP. WALL
THICKNESS 0.060

(17)

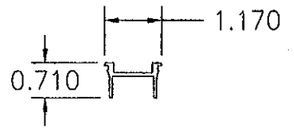

(21) PANEL INTERLOCK STILE
TYP. WALL
THICKNESS 0.080

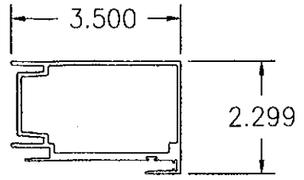

(22) FEMALE BUTT STILE
TYP. WALL
THICKNESS 0.080

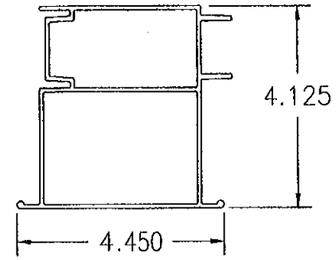

90° CORNER STILE
TYP. WALL
THICKNESS 0.080

(23)

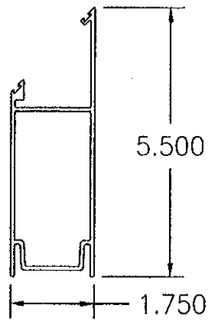

90° CORNER STILE CLIP
TYP. WALL
THICKNESS 0.080

(24)

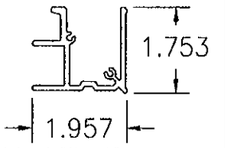

L = FULL LENGTH

135° CORNER STILE
TYP. WALL
THICKNESS 0.080

(25)

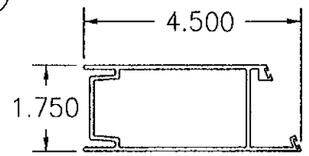

135° CORNER STILE CLIP
TYP. WALL THICKNESS 0.100

(26)

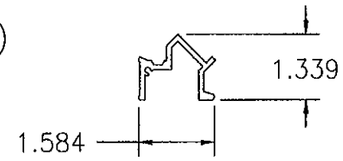

L = FULL LENGTH

HORIZONTAL 9/16" GLASS STOP
TYP. WALL THICKNESS 0.070

(27)

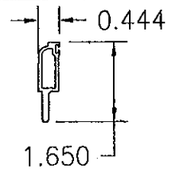

HORIZONTAL 1"
GLASS STOP
MAX. WALL THK. .20"
MIN. WALL THK. .09"

(29)

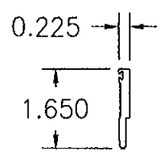

VERTICAL 1" GLASS STOP
MAX. WALL THK. .20"
MIN. WALL THK. .09"

(30)

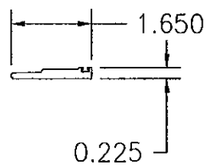

(31) REINFORCING BAR
MAX. WALL THICKNESS .25"
MIN. WALL THICKNESS .125"

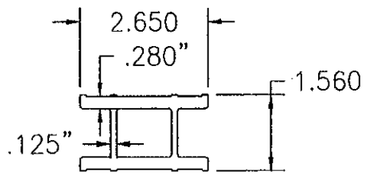

L = FULL LENGTH

(32) ROLL BACKUP
TYP. WALL THICKNESS 0.175

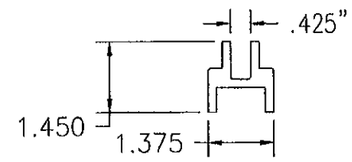

VERTICAL 9/16"
GLASS STOP
TYP. WALL
THICKNESS 0.070

(28)

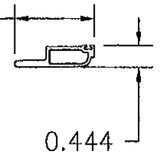

PRODUCT REVISED
as complying with the Florida
Building Code
Acceptance No 12-0130.03
Expiration Date 3.17.15
By Ishaq I. Chanda
Miami Dade Product Control

PRODUCT RENEWED
as complying with the Florida
Building Code
Acceptance No 08-1010.06
Expiration Date MARCH 7, 2015
By Ishaq I. Chanda
Miami Dade Product Control
Division

SHEET	REV	DESCRIPTION	DATE	BY
1 – 22	E	PER DADE COUNTY LETTER DATED 01/11/10	01/12/10	TJH
1 – 22	D	PER DADE COUNTY LETTER DATED 10/06/09	10/12/09	TJH
1 – 23	C	PER DADE COUNTY LETTER DATED 01/15/09	03/12/09	TJH
	B	General revision and update to 2007 FBC	07/24/08	DRL
	A	Per Dade County letter dated 12/03/04	12/21/04	BB

REVISIONS

LUIS R. LOMAS P.E.
Luis R. Lomas
2/1/10
FLORIDA REGISTRATION
NO. 62514

WinDoor
INCORPORATED
7500 AMSTERDAM DRIVE
ORLANDO, FL 32832
Phone: 407.481.8400
Fax: 407.481.0505
www.windoorinc.com

Dwg Title:
SERIES 8000 SGD LARGE MISSILE
COMPONENTS 4'0 X 10'0 PANELS

SIZE	Drn By:	DWG NO.	REV
B	BB	WIND0082	E

SCALE N.T.S. | DATE: 09/13/04 | SHEET 22 OF 22