MIAMI-DADE COUNTY
DEPARTMENT OF PERMITTING, ENVIRONMENT, AND REGULATORY AFFAIRS (PERA)
BOARD AND CODE ADMINISTRATION DIVISION

NOTICE OF ACCEPTANCE (NOA)

MIAMI-DADE COUNTY
PRODUCT CONTROL SECTION
11805 SW 26 Street, Room 208
Miami, Florida 33175-2474
T (786) 315-2590 F (786) 315-2599
www.miamidade.gov/pera/

WinDoor, Incorporated
7500 Amsterdam drive
Orlando, Florida, 32832

SCOPE:

This NOA is being issued under the applicable rules and regulations governing the use of construction materials. The documentation submitted has been reviewed and accepted by Miami-Dade County PERA -Product Control Section to be used in Miami Dade County and other areas where allowed by the Authority Having Jurisdiction (AHJ).

This NOA shall not be valid after the expiration date stated below. The Miami-Dade County Product Control Section (In Miami Dade County) and/or the AHJ (in areas other than Miami Dade County) reserve the right to have this product or material tested for quality assurance purposes. If this product or material fails to perform in the accepted manner, the manufacturer will incur the expense of such testing and the AHJ may immediately revoke, modify, or suspend the use of such product or material within their jurisdiction. PERA reserves the right to revoke this acceptance, if it is determined by Miami-Dade County Product Control Section that this product or material fails to meet the requirements of the applicable building code.

This product is approved as described herein, and has been designed to comply with the Florida Building Code, including the High Velocity Hurricane Zone.

DESCRIPTION: Series "8000" Aluminum Sliding Glass Door w/ Reinforcements-S. M. Impact

APPROVAL DOCUMENT: Drawing No. **06-10-2135,** titled "8000 SGD-SMI", sheets 1 through 13 of 13, prepared by manufacturer, dated 02/28/07 and last revised on February 09, 2009, signed and sealed by Luis R. Lomas, P.E., bearing the Miami-Dade County Product Control Revision stamp with the Notice of Acceptance number and expiration date by the Miami-Dade County Product Control Section.

MISSILE IMPACT RATING: Small Missile Impact Resistant

Limitations:

1. See applicable reinforcements in sheets 1, 6 & 7. See glazing options in sheet 9.

LABELING: Each unit shall bear a permanent label with the manufacturer's name or logo, city, state and series and following statement: "Miami-Dade County Product Control Approved", unless otherwise noted herein.

RENEWAL of this NOA shall be considered after a renewal application has been filed and there has been no change in the applicable building code negatively affecting the performance of this product.

TERMINATION of this NOA will occur after the expiration date or if there has been a revision or change in the materials, use, and/or manufacture of the product or process. Misuse of this NOA as an endorsement of any product, for sales, advertising or any other purposes shall automatically terminate this NOA. Failure to comply with any section of this NOA shall be cause for termination and removal of NOA.

ADVERTISEMENT: The NOA number preceded by the words Miami-Dade County, Florida, and followed by the expiration date may be displayed in advertising literature. If any portion of the NOA is displayed, then it shall be done in its entirety.

INSPECTION: A copy of this entire NOA shall be provided to the user by the manufacturer or its distributors and shall be available for inspection at the job site at the request of the Building Official.

This NOA **revises NOA # 08-1010.09** and consists of this page 1 and evidence pages E-1, as well as approval document mentioned above.

The submitted documentation was reviewed by **Ishaq I. Chanda, P.E.**

MIAMI-DADE COUNTY APPROVED

4/3/12

NOA No 12-0130.04
Expiration Date: October 18, 2012
Approval Date: April 12, 2012

NOTICE OF ACCEPTANCE: EVIDENCE SUBMITTED

A. DRAWINGS

1. Manufacturer's die drawings and sections (transferred from file # **08-1010.09**)
2. Drawing No. **06-10-2135,** titled "8000 SGD-SMI", sheets 1 through 13 of 13, prepared by manufacturer, dated 02/28/07 and last revised on February 09, 2009, signed and sealed by Luis R. Lomas, P.E.

Note: This revision consists of FBC 2010 update only.

B. TESTS (transferred from file # **08-1010.09**)

1. Test reports on: 1) Air Infiltration Test, per FBC, TAS 202-94
   2) Uniform Static Air Pressure Test, Loading per FBC TAS 202-94
   3) Water Resistance Test, per FBC, TAS 202-94
   4) Small Missile Impact Test per FBC, TAS 201-94
   5) Cyclic Wind Pressure Loading per FBC, TAS 203-94
   6) Forced Entry Test, per FBC 2411 3.2.1, TAS 202-94

Along with marked-up drawings and installation diagram of Aluminum Sliding Glass, prepared by National Certified Testing Laboratories Inc, Test Report No. **NCTL-210-3350-2**, dated 01/08/07 both signed & sealed by Gerald J, Ferrara, P.E.
(Note: This test report has been revised by addendum letters August 28, 2007, issued by National Certified Testing Laboratories Inc, signed & sealed by Gerald J, Ferrara, P.E.)

C. CALCULATIONS

1. Statement letter of conformance to FBC 2010, dated January 19, 2012, prepared, signed and sealed by Luis R. Lomas, P.E.
2. Anchor verification calculations complying w/ FBC-2007, dated 09-18-08 and last revised on 02-09-2009, prepared, signed and sealed by Luis R. Lomas, P.E. (transferred from file # **08-1010.09**).
3. Glazing complies with ASTME-1300-02 &-04

D. QUALITY ASSURANCE

1. Miami Dade Department of Permitting, Environment, and Regulatory Affairs (PERA).

E. MATERIAL CERTIFICATIONS

1. Notice of Acceptance No. **11-0624.01** issued to E.I. DuPont DeNemours, for "DuPont Butacite ® PVB", expiring on 12/11/2016.
2. Notice of Acceptance No. **11-0325.05** issued to Solutia, for "Saflex IIIG clear & color interlayer", expiring on 05/21/2016.

F. STATEMENTS

1. Statement letter of conformance to FBC 2010 and "No financial interest", dated 01/19/12, prepared, signed and sealed by Luis R. Lomas, P.E.
2. Statement letters of conformance to FBC 2007 and "No financial interest", both dated Sep. 22, 2008, signed and sealed by Luis R. Lomas, P.E. (transferred from file # **08-1010.09**)
1. Statement letter dated 11/24/2008, issued by Windoor, acknowledging use of proper Vanciva & SGP laminate thickness for LMI use, signed by Russell T. Traficante.
2. Lab compliance statement, as part of above referenced test report.

G. OTHER

1. This NOA **revises** NOA # **08-1010.09**, expiring on OCT. 18, 2012.
2. Test Proposal **06-0152**, approved by BCCO.

Ishaq I. Chanda

Ishaq I. Chanda, P.E.
Product Control Examiner
NOA No 12-0130.04
Expiration Date: October 18, 2012
Approval Date: April 12, 2012

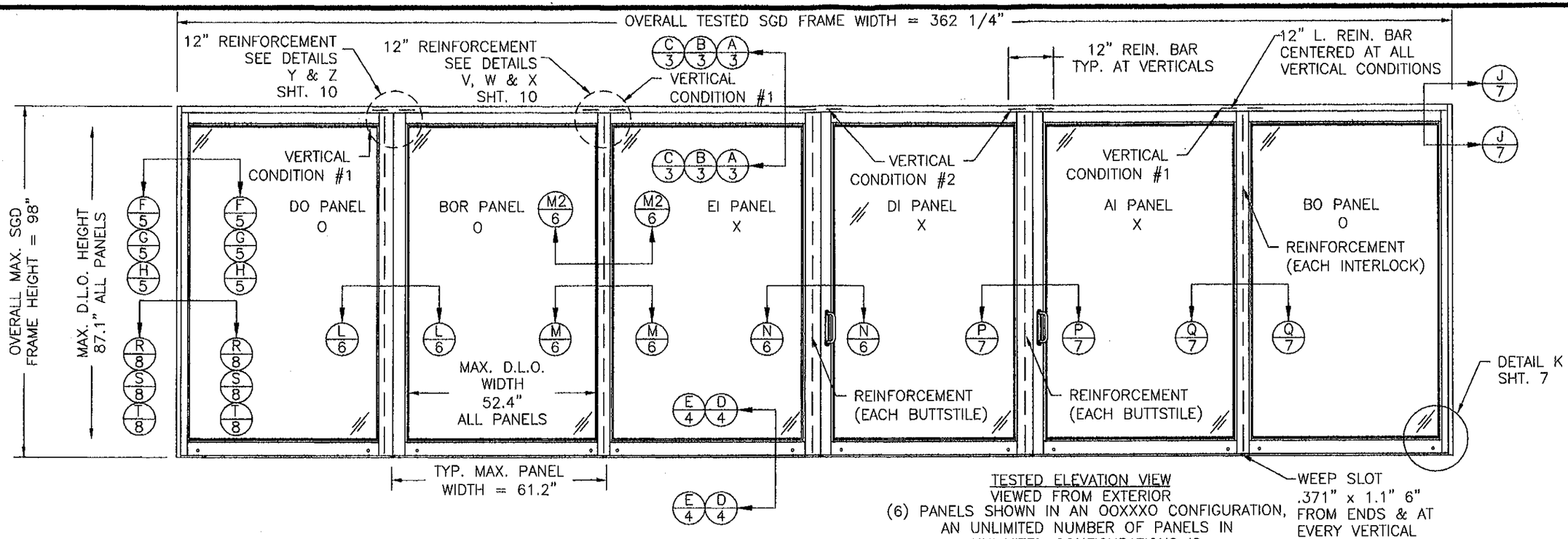

TESTED ELEVATION VIEW
VIEWED FROM EXTERIOR
(6) PANELS SHOWN IN AN OOXXXO CONFIGURATION, AN UNLIMITED NUMBER OF PANELS IN UNLIMITED CONFIGURATIONS IS APPLICABLE AS LONG AS INDIVIDUAL PANELS DO NOT EXCEED THE PANEL HEIGHT AND WIDTH TESTED AND USE VERTICAL CONDITIONS SHOWN HEREIN

DO PANEL = 61 5/16" x 96 1/16"
BOR PANEL = 61 3/8" x 96 1/16"
EI PANEL = 62 1/16" x 96 1/16"
DI PANEL = 61 1/16" x 96 1/16"
AI PANEL = 61 3/8" x 96 1/16"
BO PANEL = 61 5/16" x 96 1/16"

TABLE OF CONTENTS

SHEET NUMBER	DESCRIPTION
1	ELEVATION & GENERAL NOTES
2	ANCHORING LAYOUT & NOTES
3	2T WS/NS VERTICAL CROSS SECTIONS
4	2T WS/2T NS VERTICAL CROSS SECTIONS
5	2T WS/NS HORIZONTAL CROSS SECTIONS
6	VERTICAL CONDITIONS HORIZONTAL CROSS SECTIONS
7	VERTICAL CONDITIONS HORIZONTAL CROSS SECTIONS
8	VERTICAL CONDITIONS HORIZONTAL CROSS SECTIONS
9	GLAZING DETAILS
10	HEADER REINFORCEMENT BAR DETAILS
11	BILL OF MATERIALS & UNIT COMPONENTS
12	UNIT COMPONENTS
13	UNIT COMPONENTS

GENERAL NOTES:

1) THE PRODUCT SHOWN HEREIN COMPLIES WITH THE REQUIRMENTS OF THE CURRENT FLORIDA BUILDING CODE, INCLUDING THE HVHZ.
2) 1X OR 2X BUCK TO BE ENGINEERED SEPARATELY AND CAPABLE OF TRANSFERRING LOAD IMPOSED TO THE SUBSTRATE.
3) MASONRY/CONCRETE, 1X OR 2X WOOD BUCK, 20 GAUGE STEEL FRAMING WITH 2X WOOD BACKING, ALL FRAMING TO BE DESIGNED AND ANCHORED TO PROPERLY TRANSFER ALL LOADS TO STRUCTURE, BUCK OR FRAMING IS RESPONSIBILITY OF ARCHITECT OF RECORD.
4) PRODUCTS ARE APPROVED FOR USE WHERE SMALL MISSILE IMPACT RESISTANCE IS REQUIRED. IMPACT PROTECTIVE SYSTEM IS NOT REQUIRED FOR INSTALLATION OF THIS PRODUCT 30' ABOVE GROUND LEVEL.
5) OVERALL FINISHED UNIT WIDTH IS NOT LIMITED TO THE OVERALL TESTED WIDTH OF 362 1/2".
6) ALL UNITS MUST BE REINFORCED AS SHOWN IN VERTICAL AND HORIZONTAL CROSS SECTIONS.
7) ALLOWABLE STREES INCREASE OF 1/3, WAS NOT USED IN THE DESIGN OF THE PRODUCT SHOWN HEREIN.

PRODUCT REVISED
as complying with the Florida Building Code
Acceptance No 12-0130.04
Expiration Date OCT 18,2012
By Ishaq I. Chanda
Miami Dade Product Control

PRODUCT REVISED
as complying with the Florida Building Code
Acceptance No 06-1010.09
Expiration Date OCT 18,2012
By Ishaq I. Chanda
Miami Dade Product Control Division

ALUMINUM REINFORCED SGD-SMI

MAXIMUM DESIGN PRESSURE RATING	
POSITIVE	+100.0 PSF
NEGATIVE	-130.0 PSF

SHEET	REV	DESCRIPTION	DATE	BY
1-13	D	REVISED PER DADE LETTER DATED 01/22/09	01/27/09	TJH
1-13	C	REVISED PER DADE LETTER DATED 11/09/08	11/24/08	TJH
1	B	General revision and update to 2007 FBC	08/03/08	RJK
1	A	Corrected per Dade county letter dated May 13, 2007	08/17/07	DRL

REVISIONS

LUIS R. LOMAS P.E.
2/9/09
FLORIDA REGISTRATION NO. 62514

WinDoor INCORPORATED
7500 AMSTERDAM DRIVE
ORLANDO, FL 32832
Phone: 407.481.8400
Fax 407.481.0505
www.windoorinc.com

Dwg Title:
8000 SERIES SGD SMI 2T WS/NS RETRO SILL WITH 5'0 x 8'2 PANELS - ELEVATION & GENERAL NOTES

SIZE	Drn By:	DWG NO.	REV
B	TJH	06-10-2135	D

SCALE N.T.S. | DATE: 02/28/07 | SHEET 1 of 13

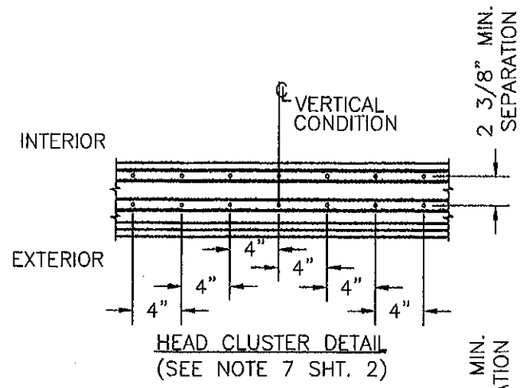

HEAD CLUSTER DETAIL
(SEE NOTE 7 SHT. 2)

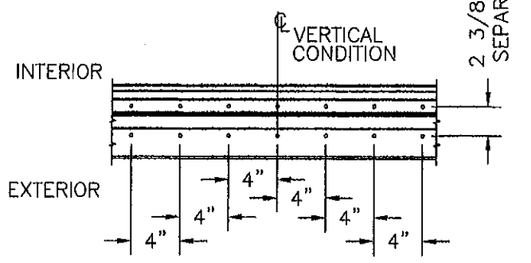

SILL CLUSTER DETAIL

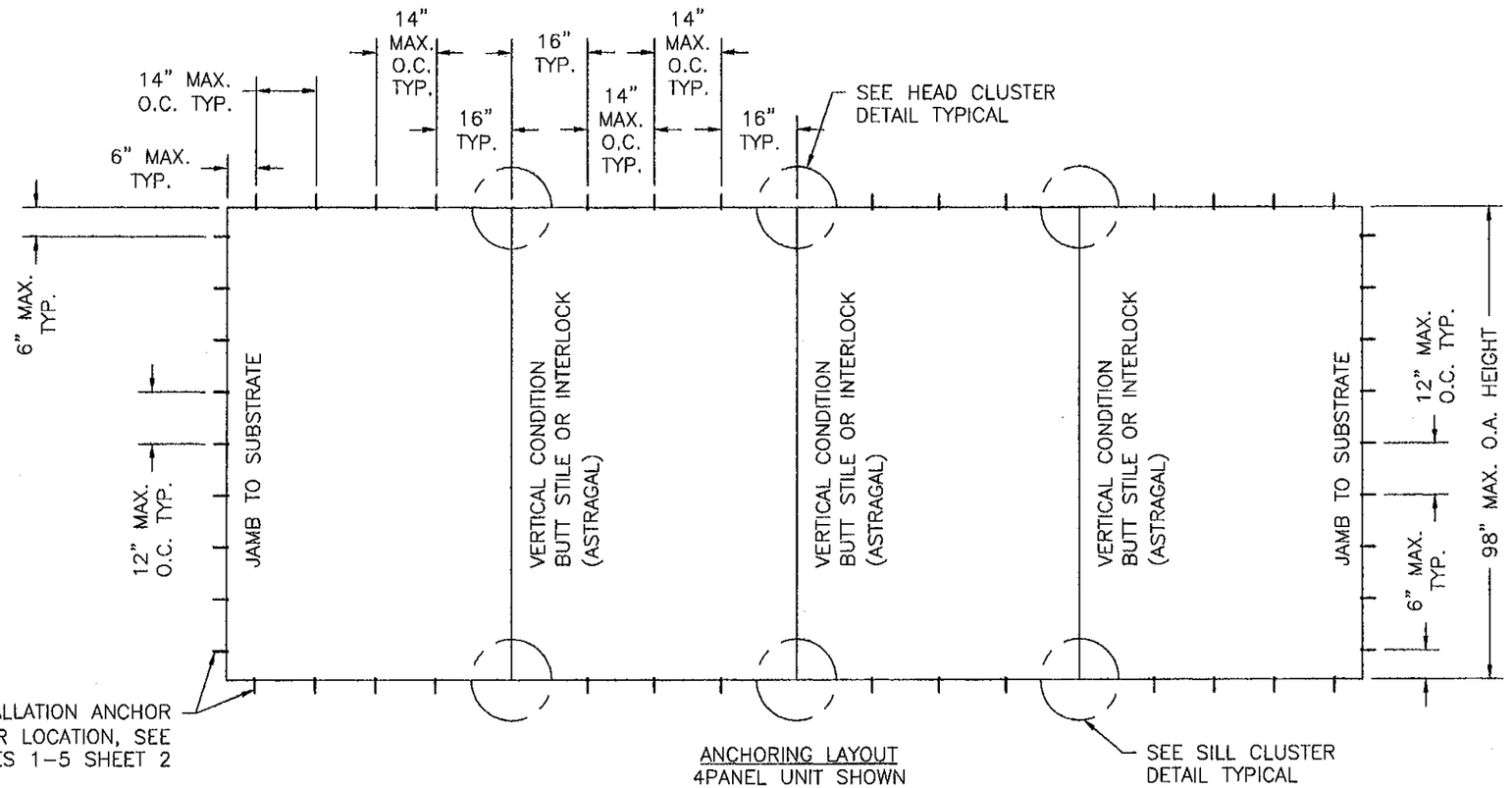

ANCHORING LAYOUT
4PANEL UNIT SHOWN
APPLICABLE TO ALL
APPROVED CONFIGURATIONS

NOTES:
1. THERE ARE (2) INSTALLATION ANCHORS AT EACH ANCHOR LOCATION.
2. FOR 2X WOOD FRAME INSTALLATION: ANCHORS ARE TO BE #14 WOOD SCREW OF SUFFICIENT LENGTH TO ACHIEVE A MINIMUM EMBEDMENT OF 1 1/2" INTO (2) 2X FRAMING.
3. FOR 1X BUCK OVER MASONRY/CONCRETE INSTALLATION: HEAD AND JAMB ANCHORS ARE TO BE 1/4" DIA. ELCO CRETE-FLEX SS4 MASONRY SCREW OF SUFFICIENT LENGTH TO ACHIEVE A MINIMUM EMBEDMENT OF 1 1/4" INTO MASONRY/CONCRETE. (1X BUCK TO BE PROPERLY SECURED)
4. FOR SILL DIRECTLY TO MASONRY/CONCRETE INSTALLATION: ANCHORS ARE TO BE 1/4" DIA. ELCO CRETE--FLEX SS4 MASONRY SCREW OF SUFFICIENT LENGTH TO ACHIEVE A MINIMUM EMBEDMENT OF 1 1/4" INTO MASONRY/CONCRETE.
5. FOR WOOD BACKED STEEL FRAME INSTALLATION: ANCHORS ARE TO BE #14 WOOD SCREW OF SUFFICIENT LENGTH TO ACHIEVE A MINIMUM EMBEDMENT OF 1 1/2" INTO 2X FRAMING.
6. 1/4" MAX. SHIM AS REQUIRED AT EACH SET OF INSTALLATION ANCHORS USING LOAD BEARING SHIMS OR BETTER. SHIM FROM FRONT EDGE TO BACK EDGE TO FULLY SUPPORT FRAME. SHIM WHERE A SPACE GREATER THAN 1/16" IS PRESENT, (MAXIMUM 1/4" SHIM).
7. ANCHORS AT HEAD CLUSTER MUST BE FLAT HEAD. REFER TO HEAD CLUSTER DETAIL.

PRODUCT REVISED
as complying with the Florida Building Code
Acceptance No. 12-0130.04
Expiration Date 10/18/12
By Ishaq I. Chaudhry
Miami Dade Product Control

PANEL CONSTRUCTION NOTE:
EACH PANEL HAS COPED AND BUTTED CORNERS. EACH CORNER IS FASTENED TOGETHER WITH (2) #10 SS PAN HEAD SCREWS, BILL OF MATERIALS ITEM #25 AND #81. SEE NOTE 2 SHT. 3 AND NOTE 3 SHT. 5.

FRAME CONSTRUCTION NOTE:
EACH FRAME CORNER IS NOTCHED AND BUTTED AND IS SECURED TOGETHER WITH (2) #8 x 5/8" PHILLIPS PAN HEAD TYPE F SS SCREWS, BILL OF MATERIALS ITEM #26.

PRODUCT REVISED
as complying with the Florida Building Code
Acceptance No. 06-1010.09
Expiration Date Oct 18, 2012
By Ishaq I. Chaudhry
Miami Dade Product Control Division

SHEET	REV	DESCRIPTION	DATE	BY
1-13	D	REVISED PER DADE LETTER DATED 01/22/09	01/27/09	TJH
1-13	C	REVISED PER DADE LETTER DATED 11/09/08	11/24/08	TJH
2	B	General revision and update to 2007 FBC	06/03/08	RJK
2	A	Corrected per Dade county letter dated May 13, 2007	08/17/07	DRL

REVISIONS

LUIS R. LOMAS P.E.
Luis R. Lomas
8/9/09
FLORIDA REGISTRATION NO. 62514

WinDoor INCORPORATED
7500 AMSTERDAM DRIVE
ORLANDO, FL 32832
Phone: 407.481.8400
Fax: 407.481.0505
www.windoorinc.com

Dwg Title:
8000 SERIES SGD SMI 2T WS/NS RETRO SILL WITH 5'0 x 8'2 PANELS - ANCHORING LAYOUT & NOTES

SIZE	Drn By:	DWG NO.	REV
B	TJH	06-10-2135	D

SCALE N.T.S. | DATE: 02/28/07 | SHEET 2 of 13

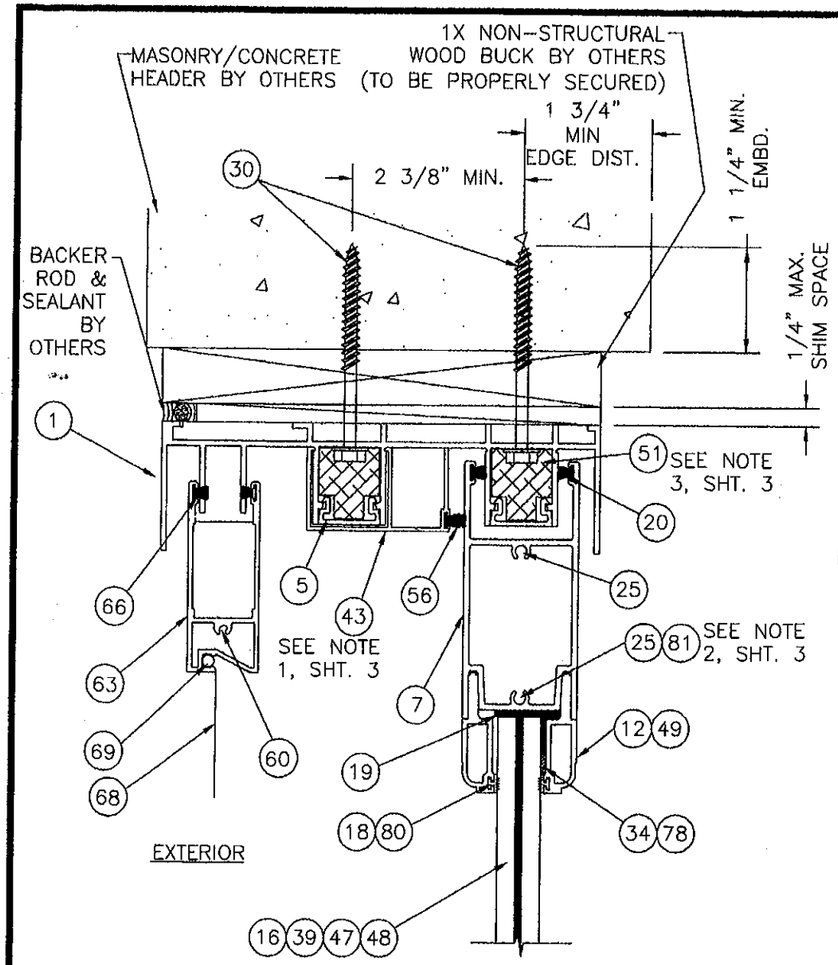

A-A VERTICAL CROSS SECTION
2T WS/NS ON 1X NON-STRUCTURAL WOOD BUCK
TO MASONRY/CONCRETE HEAD
(1X BUCK TO BE PROPERLY SECURED)

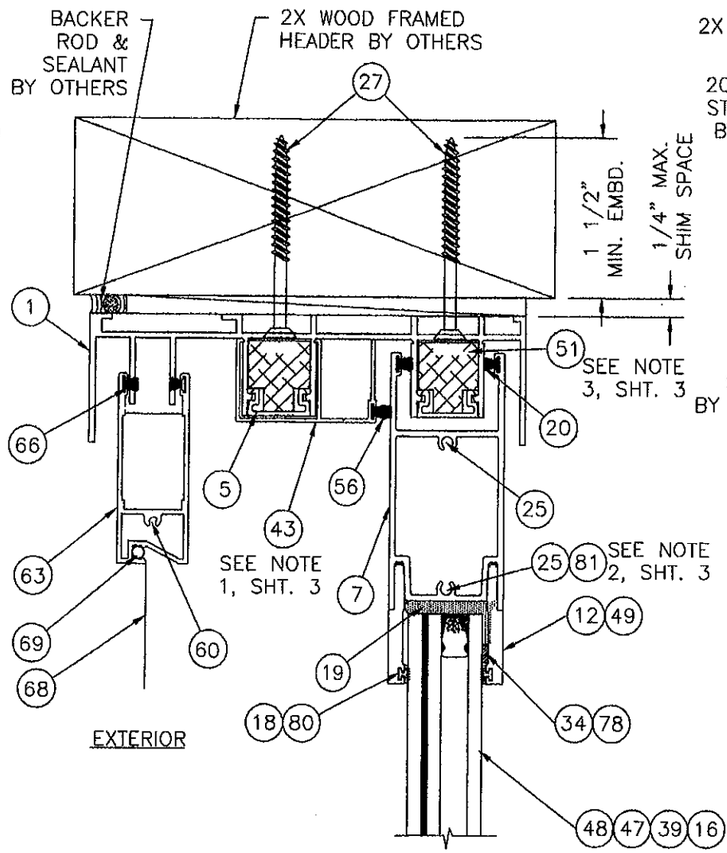

B-B VERTICAL CROSS SECTION
2T WS/NS ON 2X WOOD FRAMED HEAD

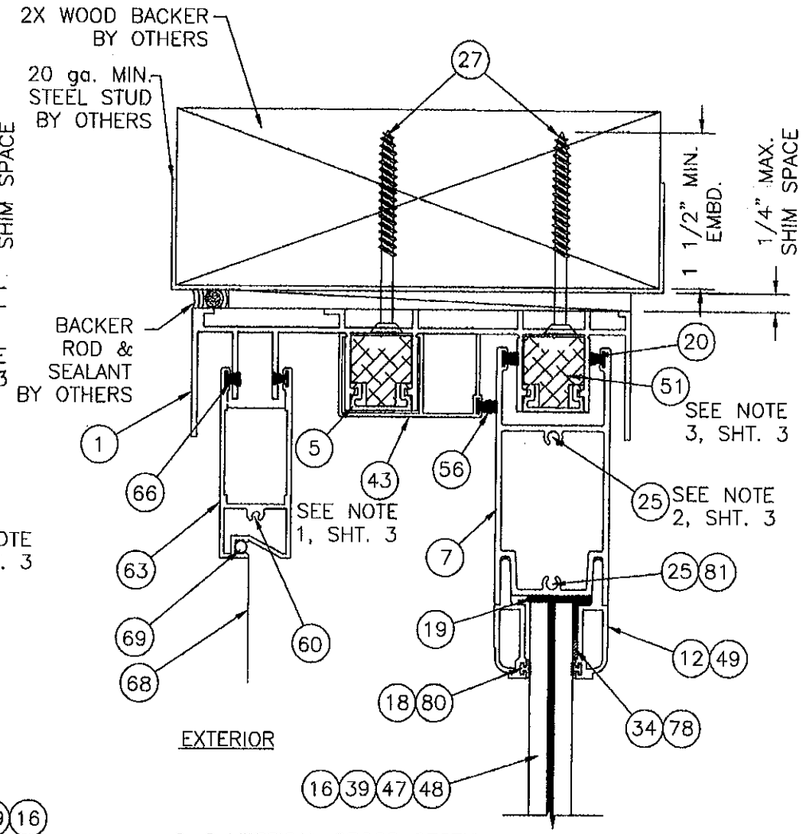

C-C VERTICAL CROSS SECTION
2T WS/NS ON 2X WOOD BACKED
STEEL STUD HEAD

NOTES:
1. ITEM #43, HEAD COVER, IS USED WITH ITEM # 42, SILL COVER, TO SECURE MULTIPLE OR SINGLE FIXED PANELS INTO PLACE. DEPENDING ON THE CONFIGURATION BEING INSTALLED ITEM #43 AND #42 MAY BE REPLACED WITH ITEM #37, #8-3/4" PAN HEAD TEK SCREW TO SECURE FIXED PANEL TO FIXED PANEL OR FIXED PANEL TO JAMB AS SHOWN IN SECTIONS ON SHEETS 3, 4, 5 & 6. (SEE NOTE SHEET 5 & 6).
2. ON ALL INTERLOCK PANELS ONLY TOP RAIL ATTACHMENT TO THE INTERLOCK STILE, THE BOTTOM ASSEMBLY SCREW MUST BE ITEM #81.
3. SEE DETAILS V, W, X, Y & Z ON SHEET 10 FOR INSTALLATION OF ITEM #51, H.P. HEAD REINFORCEMENT BAR.

PRODUCT REVISED
as complying with the Florida Building Code
Acceptance No 12-0130.04
Expiration Date 10/18/12
By Ishaq I. Chanda
Miami Dade Product Control

PRODUCT REVISED
as complying with the Florida Building Code
Acceptance No 08-1010.09
Expiration Date OCT 18, 2012
By Ishaq I. Chanda
Miami Dade Product Control Division

SHEET	REV	DESCRIPTION	DATE	BY
1-13	D	REVISED PER DADE LETTER DATED 01/22/09	01/27/09	TJH
1-13	C	REVISED PER DADE LETTER DATED 11/09/08	11/24/08	TJH
3	B	General revision and update to 2007 FBC	06/03/08	RJK
3	A	Corrected per Dade county letter dated May 13, 2007	08/17/07	DRL

REVISIONS

LUIS R. LOMAS P.E.
2/9/09
FLORIDA REGISTRATION NO. 62514

WinDoor INCORPORATED
7500 AMSTERDAM DRIVE
ORLANDO, FL 32832
Phone: 407.481.8400
Fax: 407.481.0505
www.windoorinc.com

Dwg Title:
8000 SERIES SGD SMI 2T WS/NS RETRO SILL WITH 5'0 x 8'2 PANELS - 2T WS/NS VERTICAL SECTIONS

SIZE	Drn By:	DWG NO.	REV
B	TJH	06-10-2135	D

SCALE	DATE:	SHEET
N.T.S.	02/28/07	3 of 13

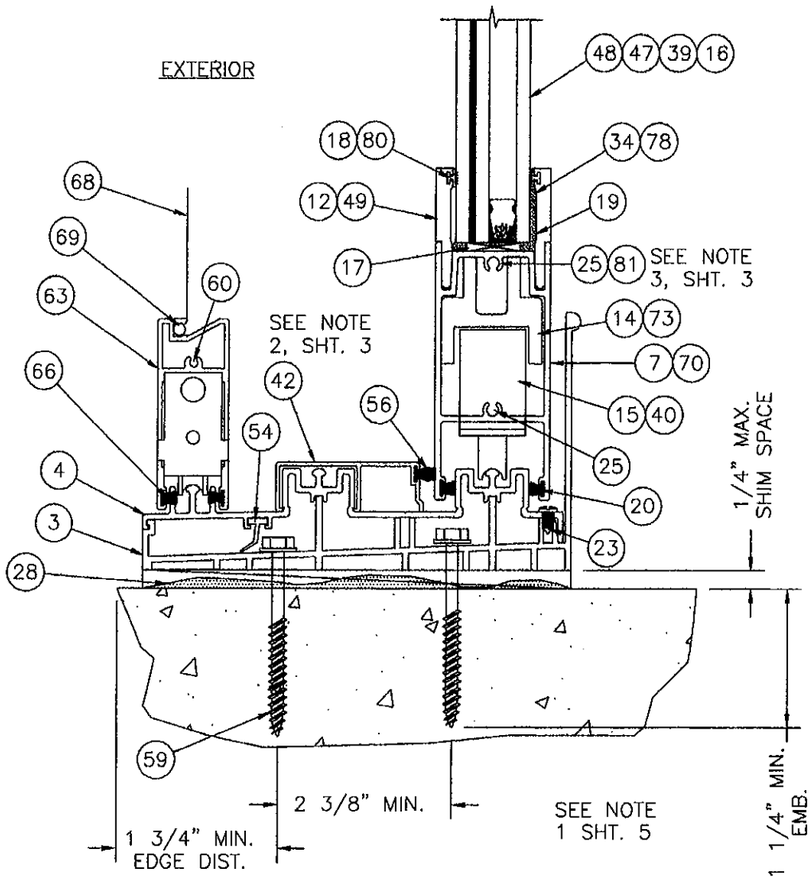

D–D VERTICAL CROSS SECTION
2T WS TO MASONRY/CONCRETE SLAB

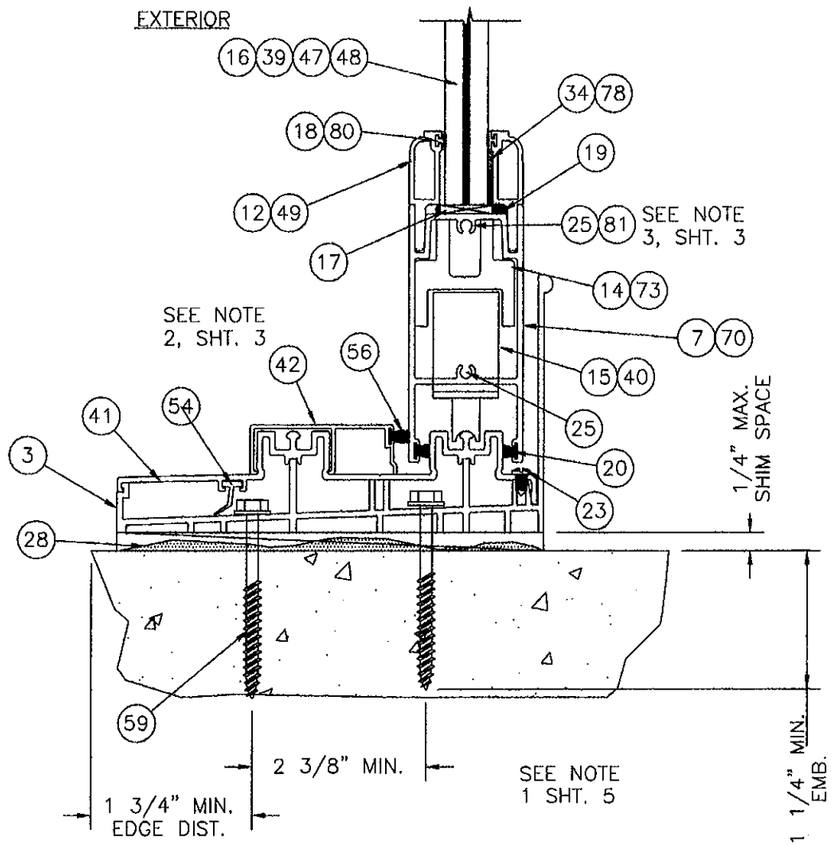

E–E VERTICAL CROSS SECTION
2T NS TO MASONRY/CONCRETE SLAB

NOTES:
1. SILL SHIM MUST BE SET IN A FULL BED OF APPROVED SEALANT OR NON–SHRINK HIGH STRENGTH GROUT.
2. ITEM #43, HEAD COVER, IS USED WITH ITEM # 42, SILL COVER, TO SECURE MULTIPLE OR SINGLE FIXED PANELS INTO PLACE. DEPENDING ON THE CONFIGURATION BEING INSTALLED ITEM #43 AND #42 MAY BE REPLACED WITH ITEM #37, # 8–3/4" PAN HEAD TEK SCREW TO SECURE FIXED PANEL TO FIXED PANEL OR FIXED PANEL TO JAMB AS SHOWN IN SECTIONS ON SHEETS 3, 4, 5 & 6. (SEE NOTE SHEET 5 & 6).
3. ON ALL INTERLOCK PANELS ONLY BOTTOM RAIL ATTACHMENT TO THE INTERLOCK STILE, THE TOP ASSEMBLY SCREW MUST BE ITEM #81.

PRODUCT REVISED
as complying with the Florida Building Code
Acceptance No 12-0130.04
Expiration Date 10/18/12
By Ishaq I. Chaudhry
Miami Dade Product Control

PRODUCT REVISED
as complying with the Florida Building Code
Acceptance No 08-1018.09
Expiration Date OCT 18, 2012
By Ishaq I. Chaudhry
Miami Dade Product Control Division

SHEET	REV	DESCRIPTION	DATE	BY
1–13	D	REVISED PER DADE LETTER DATED 01/22/09	01/27/09	TJH
1–13	C	REVISED PER DADE LETTER DATED 11/09/08	11/24/08	TJH
4	B	General revision and update to 2007 FBC	08/03/08	RJK
4	A	Corrected per Dade county letter dated May 13, 2007	08/17/07	DRL

REVISIONS

LUIS R. LOMAS P.E.
2/9/09
FLORIDA REGISTRATION NO. 62514

WinDoor INCORPORATED
7500 AMSTERDAM DRIVE
ORLANDO, FL 32832
Phone: 407.481.8400
Fax: 407.481.0505
www.windoorinc.com

Dwg Title:
8000 SERIES SGD SMI 2T WS/NS RETRO SILL WITH 5'0 x 8'2 PANELS – 2T WS/2T NS VERT SECTIONS

SIZE	Drn By:	DWG NO.	REV
B	TJH	06–10–2135	D

SCALE N.T.S. | DATE: 02/28/07 | SHEET 4 of 13

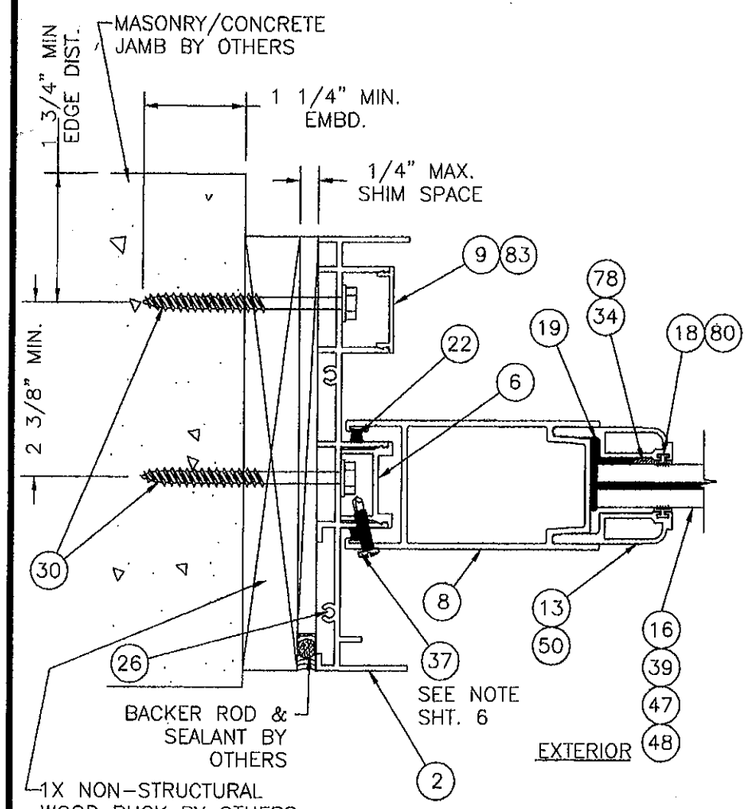

F-F HORIZONTAL CROSS SECTION
2T WS/NS ON 1X NON-STRUCTURAL WOOD BUCK TO MASONRY/CONCRETE JAMB
(1X BUCK TO BE PROPERLY SECURED)

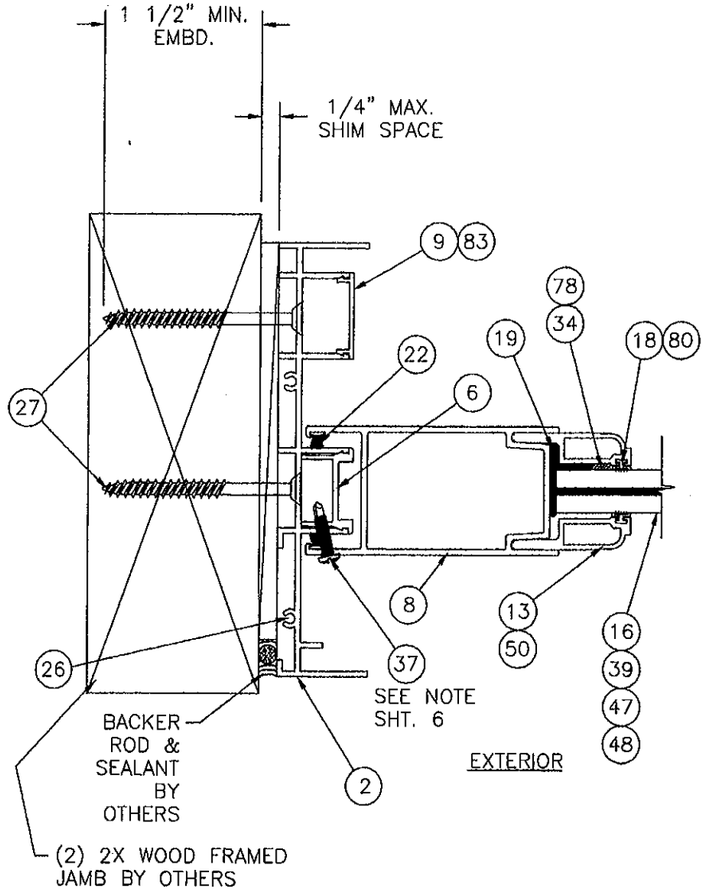

G-G HORIZONTAL CROSS SECTION
2T WS/NS ON 2X WOOD FRAMED JAMB

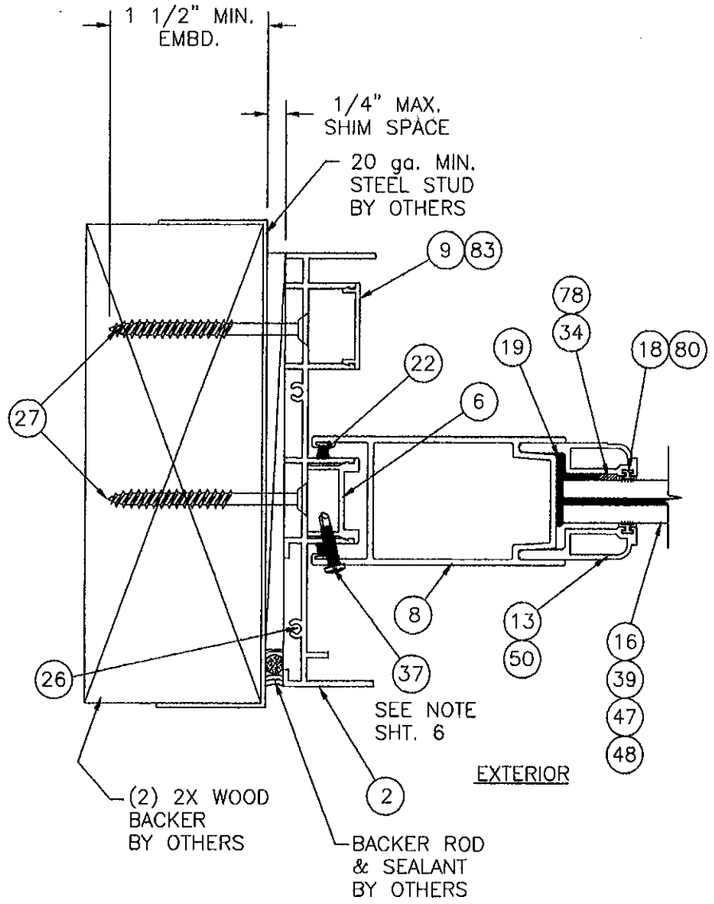

H-H HORIZONTAL CROSS SECTION
2T WS/NS ON 2X WOOD
BACKED STEEL STUD JAMB

PRODUCT REVISED
as complying with the Florida Building Code
Acceptance No. 12-0130.04
Expiration Date 10/13/12
By Ishaq I. Chanda
Miami Dade Product Control

PRODUCT REVISED
as complying with the Florida Building Code
Acceptance No. 08-1010.09
Expiration Date OCT 13, 2012
By Ishaq I. Chanda
Miami Dade Product Control Division

NOTE: (FIXED PANEL TO JAMB)
ITEM #37, #8 x 3/4" SELF TAPPING TEK SCREW IS USED TO SECURE THE FIXED PANEL IN PLACE. (4) SCREWS ARE REQUIRED, 6" FROM TOP AND BOTTOM OF PANEL AND (2) MORE EQUALLY SPACED. IN THIS CONDITION ONLY (1) SET OF SCREWS IS REQUIRED. SCREWS ARE SHOWN ON THE EXTERIOR FACE OF THE UNIT, BUT CAN BE INSTALLED ON THE INTERIOR FACE INSTEAD. DEPENDING ON THE CONFIGURATION BEING INSTALLED ITEM #37 MAYBE REPLACED WITH ITEM #43, HEAD COVER, AND ITEM #42, SILL COVER, SEE CROSS SECTIONS ON SHEETS 3, 4, 5 & 6. (ALSO SEE NOTE ON SHEET 6).

SHEET	REV	DESCRIPTION	DATE	BY
1-13	D	REVISED PER DADE LETTER DATED 01/22/09	01/27/09	TJH
1-13	C	REVISED PER DADE LETTER DATED 11/09/08	11/24/08	TJH
5	B	General revision and update to 2007 FBC	08/03/08	RJK
5	A	Corrected per Dade county letter dated May 13, 2007	08/17/07	DRL

REVISIONS

LUIS R. LOMAS P.E.
2/9/09
FLORIDA REGISTRATION NO. 62514

WinDoor INCORPORATED
7500 AMSTERDAM DRIVE
ORLANDO, FL 32832
Phone: 407.481.8400
Fax: 407.481.0505
www.windoorinc.com

Dwg Title:
8000 SERIES SGD SMI 2T WS/NS RETRO SILL WITH 5'0 x 8'2 PANELS - 2T WS/NS HORIZONTAL SECTIONS

SIZE	Drn By:	DWG NO.	REV
B	TJH	06-10-2135	D

SCALE N.T.S. | DATE: 02/28/07 | SHEET 5 of 13

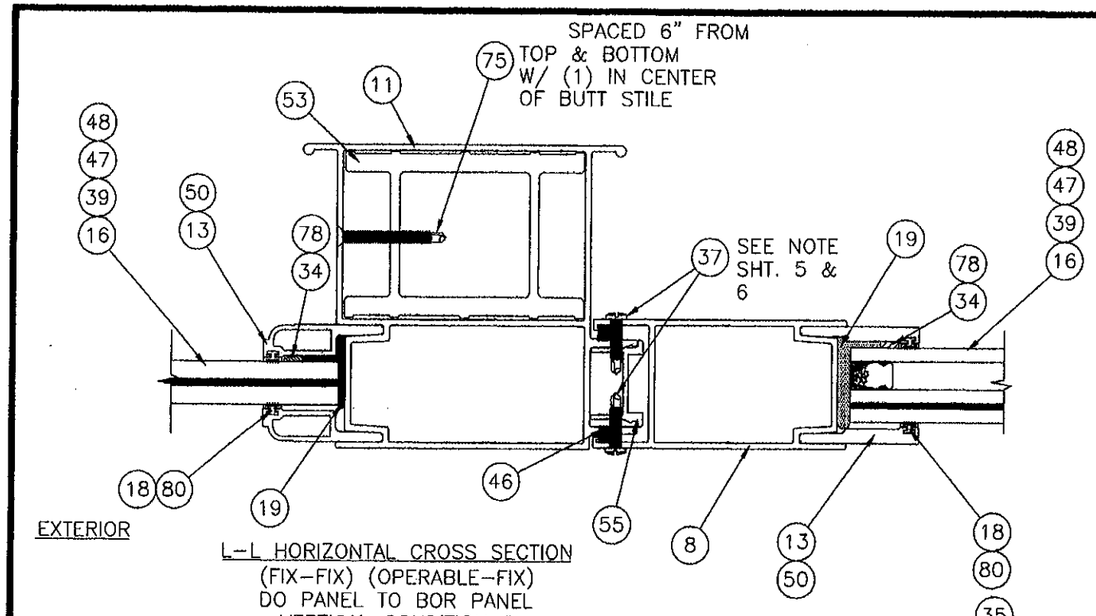

L-L HORIZONTAL CROSS SECTION
(FIX-FIX) (OPERABLE-FIX)
DO PANEL TO BOR PANEL
VERTICAL CONDITION 2

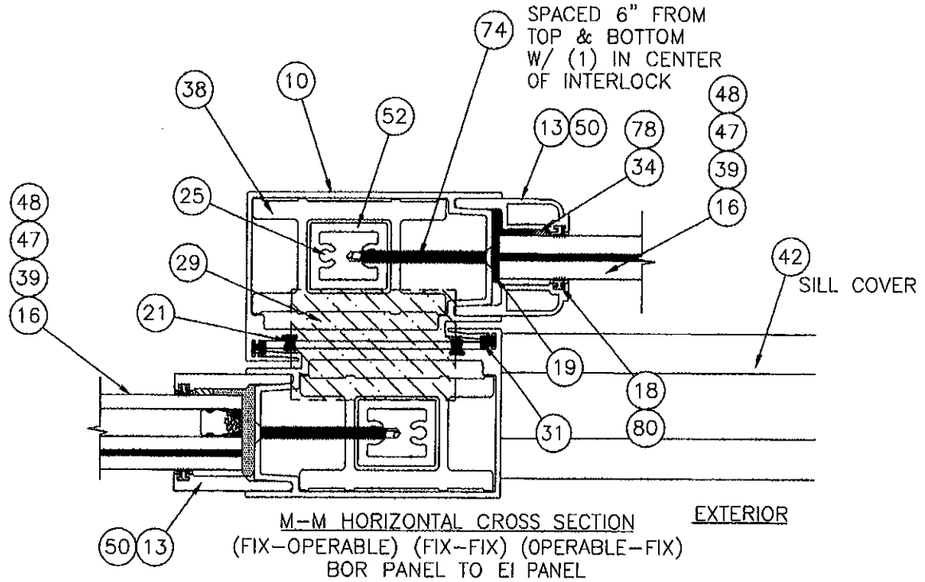

M-M HORIZONTAL CROSS SECTION
(FIX-OPERABLE) (FIX-FIX) (OPERABLE-FIX)
BOR PANEL TO EI PANEL
VERTICAL CONDITION 1

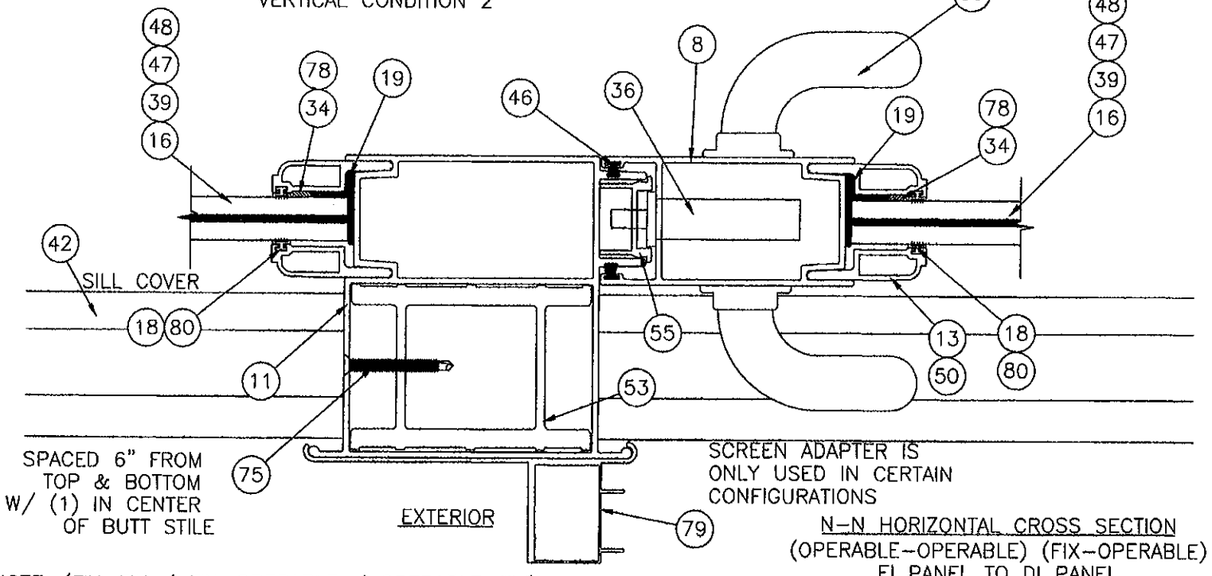

N-N HORIZONTAL CROSS SECTION
(OPERABLE-OPERABLE) (FIX-OPERABLE)
EI PANEL TO DI PANEL
VERTICAL CONDITION 2

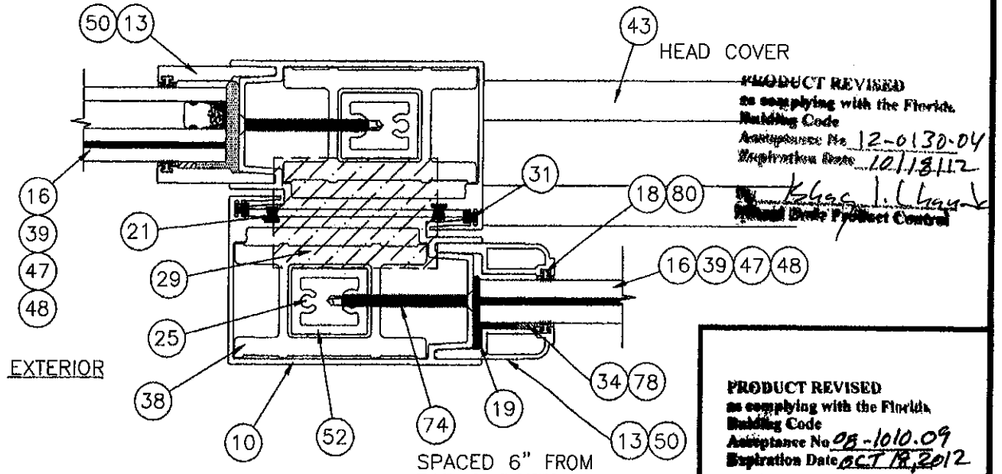

M2-M2 HORIZONTAL CROSS SECTION
(FIX-OPERABLE) (FIX-FIX) (OPERABLE-FIX)
BOR PANEL TO EI PANEL
VERTICAL CONDITION 1

PRODUCT REVISED
as complying with the Florida Building Code
Acceptance No. 12-0130.04
Expiration Date 10/18/12
By Ichas I. Chan-Le
Miami Dade Product Control

PRODUCT REVISED
as complying with the Florida Building Code
Acceptance No. 08-1010.09
Expiration Date OCT 18, 2012
By Ichas I. Chan-Le
Miami Dade Product Control Division

NOTE: (FIX-FIX / FIX-OPERABLE / OPERABLE-FIX) ITEM #37, #8 x 3/4" SELF TAPPING TEK SCREW IS USED TO SECURE THE FIXED PANEL IN PLACE. (8) SCREWS ARE REQUIRED, 6" FROM TOP AND BOTTOM OF PANEL AND (2) MORE EQUALLY SPACED WITH (1) SET OF SCREWS ON THE EXTERIOR FACE AND (1) SET OF SCREWS ON THE INTERIOR FACE. DEPENDING ON THE CONFIGURATION BEING INSTALLED ITEM #37 MAYBE REPLACED WITH ITEM #43, HEAD COVER, AND ITEM #42, SILL COVER, SEE CROSS SECTIONS A-A THROUGH J-J SHEETS 3 THROUGH 5.

SHEET	REV	DESCRIPTION	DATE	BY
1-13	D	REVISED PER DADE LETTER DATED 01/22/09	01/27/09	TJH
1-13	C	REVISED PER DADE LETTER DATED 11/09/08	11/24/08	TJH
6	B	General revision and update to 2007 FBC	08/03/08	RJK
6	A	Corrected per Dade county letter dated May 13, 2007	08/17/07	DRL

REVISIONS

LUIS R. LOMAS P.E.
2/9/09
FLORIDA REGISTRATION NO. 62514

WinDoor INCORPORATED
7500 AMSTERDAM DRIVE
ORLANDO, FL 32832
Phone: 407.481.8400
Fax: 407.481.0505
www.windoorinc.com

Dwg Title:
8000 SERIES SGD SMI 2T WS/NS RETRO SILL WITH 5'0 x 8'2 PANELS -- VERT. CONDITIONS HORIZ SECTIONS

SIZE	Drn By:	DWG NO.	REV
B	TJH	06-10-2135	D

SCALE	DATE:	SHEET
N.T.S.	02/28/07	6 of 13

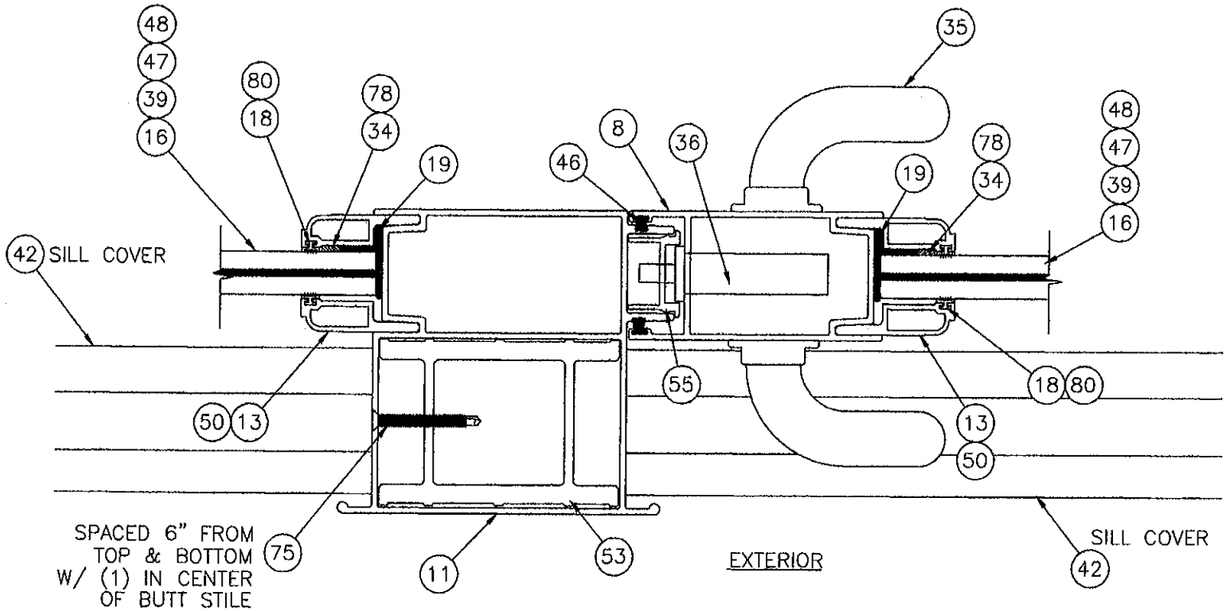

P-P HORIZONTAL CROSS SECTION
(OPERABLE-OPERABLE) (FIX-OPERABLE)
DI TO AI PANEL
VERTICAL CONDITION 2

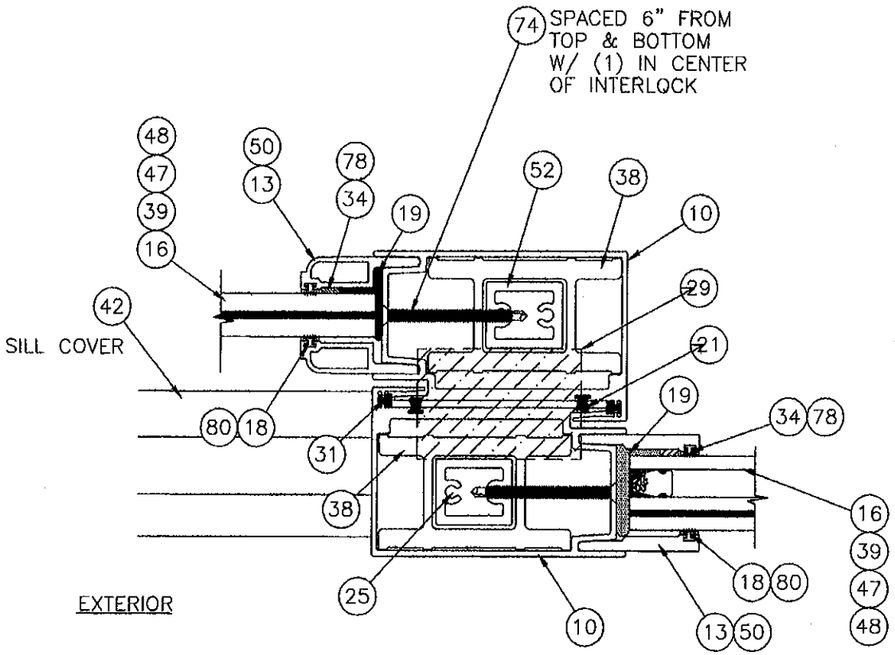

Q-Q HORIZONTAL CROSS SECTION
(OPERABLE-FIX) (FIX-FIX)
AI TO BO PANEL
VERTICAL CONDITION 1

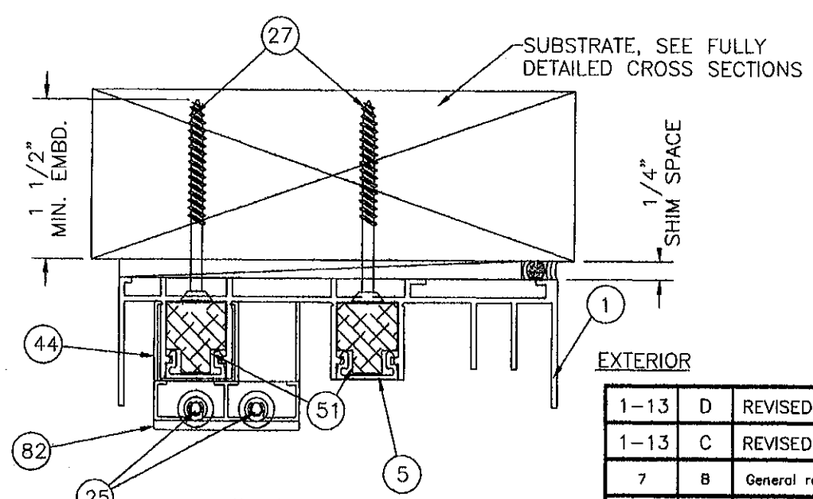

J-J VERTICAL CROSS SECTION
HEAD BUMPER CLIP VIEW
PANEL NOT SHOWN FOR CLARITY

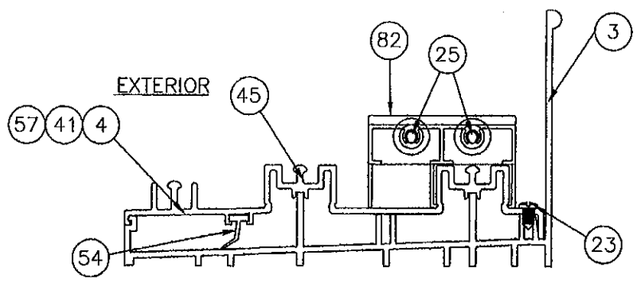

DETAIL K
FRAME SNAP-IN BUMPER VIEW

PRODUCT REVISED
as complying with the Florida Building Code
Acceptance No 12-0130.04
Expiration Date 10/18/12
By Ishag I. Chaudhary
Miami Dade Product Control

PRODUCT REVISED
as complying with the Florida Building Code
Acceptance No 08-1010.09
Expiration Date OCT 18, 2012
By Ishag I. Chaudhary
Miami Dade Product Control Division

SHEET	REV	DESCRIPTION	DATE	BY
1-13	D	REVISED PER DADE LETTER DATED 01/22/09	01/27/09	TJH
1-13	C	REVISED PER DADE LETTER DATED 11/09/08	11/24/08	TJH
7	B	General revision and update to 2007 FBC	06/03/08	RJK
7	A	Corrected per Dade county letter dated May 13, 2007	08/17/07	DRL

REVISIONS

LUIS R. LOMAS P.E.
Luis R. Lomas
2/9/09
FLORIDA REGISTRATION NO. 62514

WinDoor INCORPORATED
7500 AMSTERDAM DRIVE
ORLANDO, FL 32832
Phone: 407.481.8400
Fax: 407.481.0505
www.windoorinc.com

Dwg Title:
8000 SERIES SGD SMI 2T WS/NS RETRO SILL WITH 5'0 x 8'2 PANELS - VERT. CONDITIONS HORIZ SECTIONS

SIZE	Drn By:	DWG NO.	REV
B	TJH	06-10-2135	D

SCALE N.T.S. DATE: 02/28/07 SHEET 7 of 13

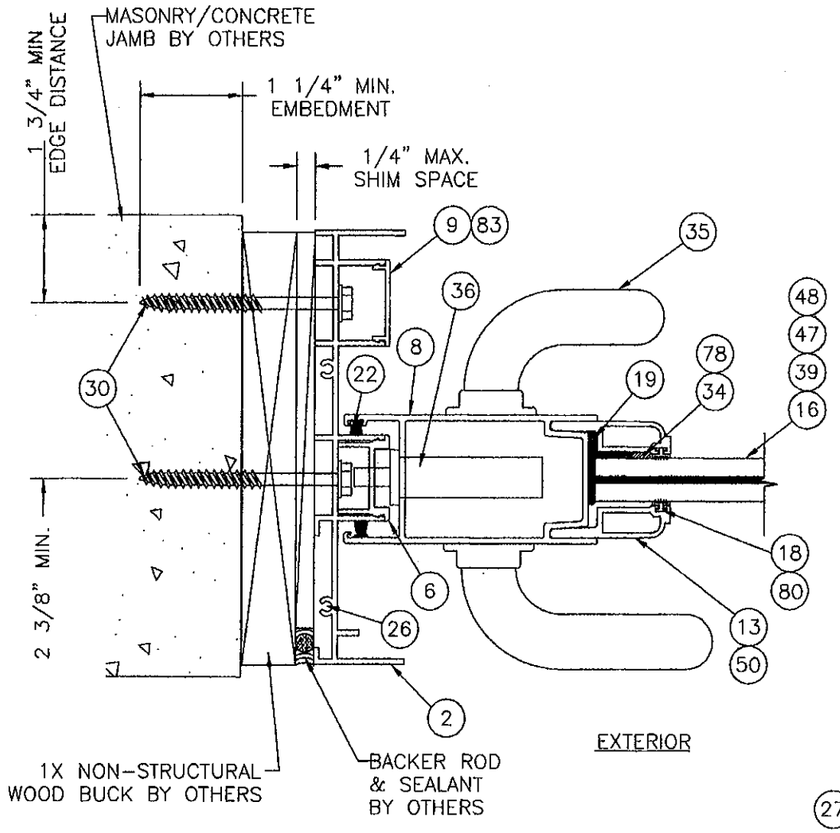

R-R OPERABLE LOCK STILE CROSS SECTION
2T WS/NS ON 1X NON-STRUCTURAL WOOD BUCK TO MASONRY/CONCRETE JAMB

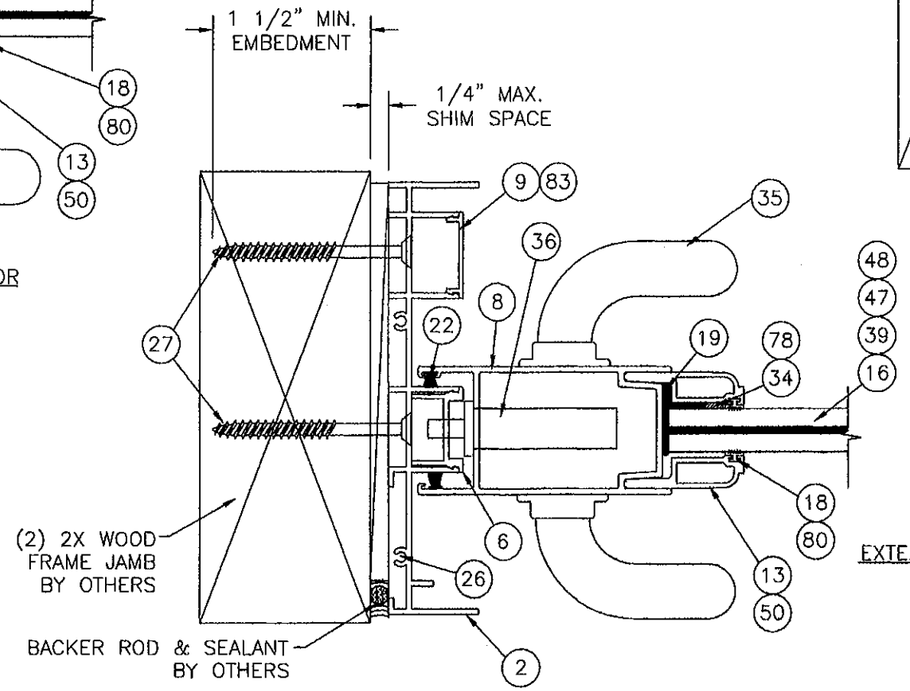

T-T OPERABLE LOCK STILE HORIZONTAL CROSS SECTION
2T WS/NS ON 2X WOOD FRAMED JAMB

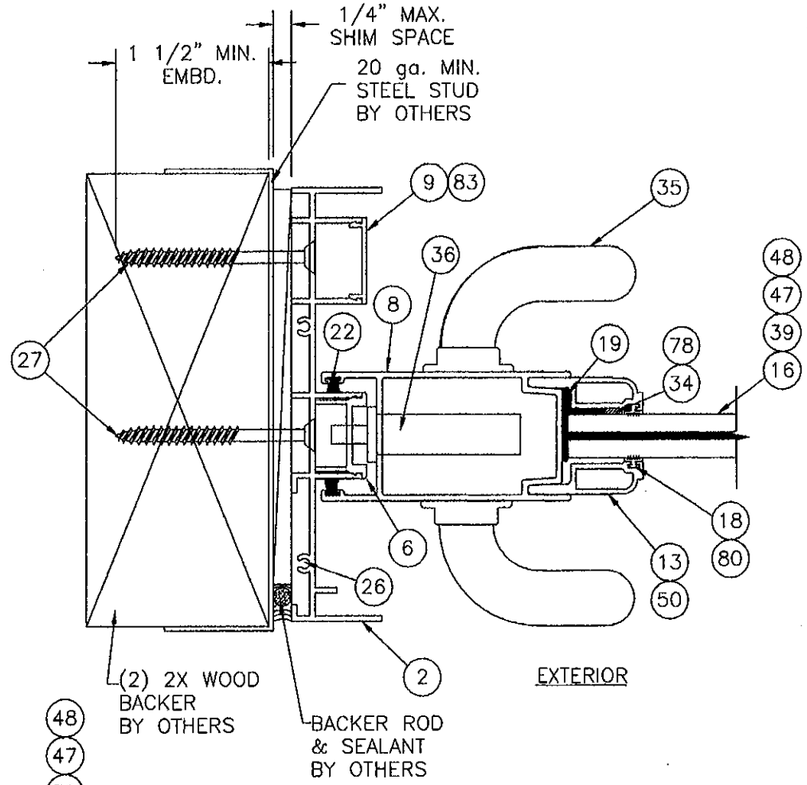

S-S OPERABLE LOCK STILE HORIZONTAL CROSS SECTION
2T WS/NS ON 2X WOOD BACKED STEEL STUD JAMB

PRODUCT REVISED
as complying with the Florida Building Code
Acceptance No. 12-0130.04
Expiration Date 10/13/12
By Ishaq I. Chand
Miami Dade Product Control

PRODUCT REVISED
as complying with the Florida Buiding Code
Acceptance No. 08-1010.09
Expiration Date OCT 15, 2012
By Ishaq I. Chand
Miami Dade Product Control Division

SHEET	REV	DESCRIPTION	DATE	BY
1-13	D	REVISED PER DADE LETTER DATED 01/22/09	01/27/09	TJH
1-13	C	REVISED PER DADE LETTER DATED 11/09/08	11/24/08	TJH
8	B	General revision and update to 2007 FBC	08/03/08	RJK
8	A	Corrected per dade county letter dated May 13, 2007	08/17/07	DRL

REVISIONS

LUIS R. LOMAS P.E.
2/9/09
FLORIDA REGISTRATION NO. 62514

WinDoor INCORPORATED
7500 AMSTERDAM DRIVE
ORLANDO, FL 32832
Phone 407.481.8400
Fax 407.481.0505
www.windoorinc.com

Dwg Title:
8000 SERIES SGD SMI 2T WS/NS RETRO SILL WITH 5'0 x 8'2 PANELS - 2T WS/NS HORIZONTAL SECTIONS

SIZE	Drn By:	DWG NO.	REV
B	TJH	06-10-2135	D

SCALE N.T.S. | DATE: 02/28/07 | SHEET 8 of 13

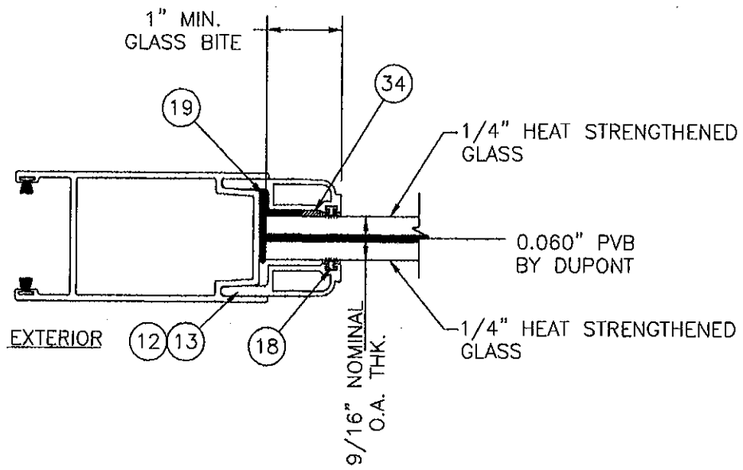

GLAZING TYPE A, ITEM #39
9/16" LAMINATED HEAT
STRENGTHENED GLASS
W/0.060" PVB INTERLAYER
BY DUPONT

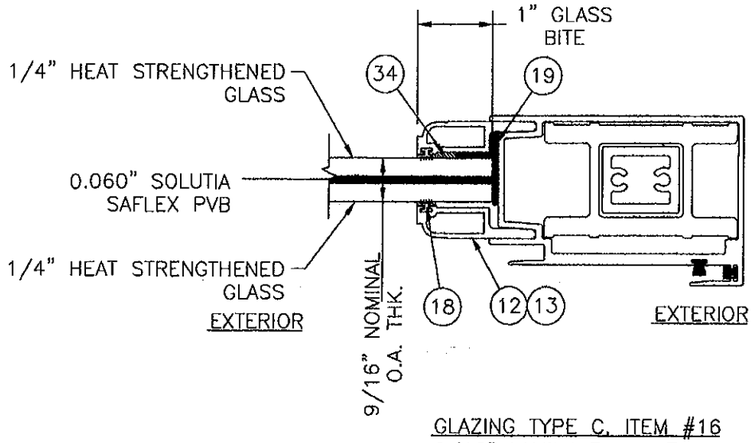

GLAZING TYPE C, ITEM #16
9/16" LAMINATED HEAT
STRENGTHENED GLASS
W/0.060" SOLUTIA SAFLEX
PVB INTERLAYER

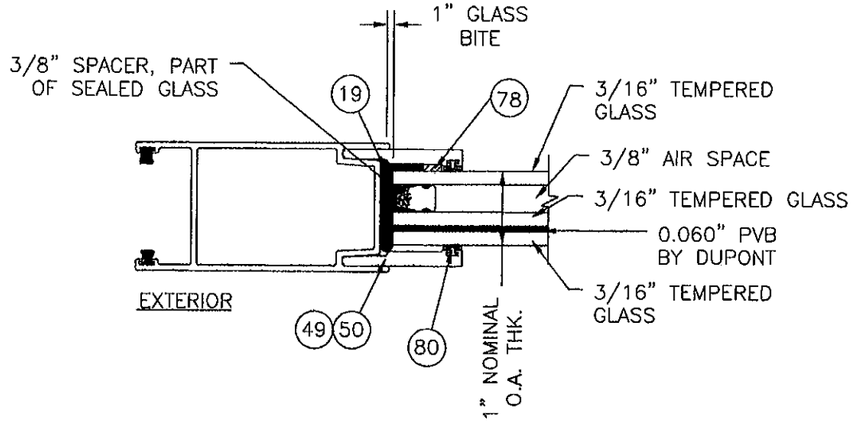

GLAZING TYPE B, ITEM #47
1" I.G. TEMPERED
LAMINATED GLASS
W/0.060" PVB INTERLAYER
BY DUPONT

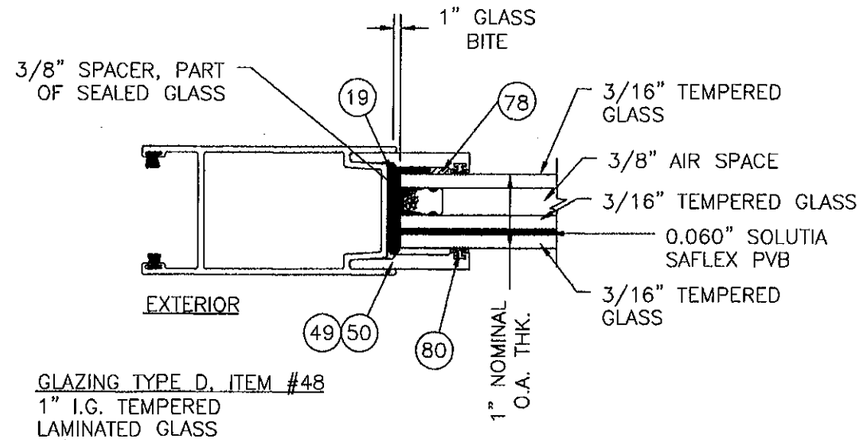

GLAZING TYPE D, ITEM #48
1" I.G. TEMPERED
LAMINATED GLASS
W/0.060" SAFLEX PVB
INTERLAYER BY SOLUTIA

PRODUCT REVISED
as complying with the Florida Building Code
Acceptance No 12-0130.04
Expiration Date 10/18/12
By Ishaq I. Chand
Miami Dade Product Control

PRODUCT REVISED
as complying with the Florida Building Code
Acceptance No 09-1010.09
Expiration Date OCT 18, 2012
By Ishaq I. Chand
Miami Dade Product Control Division

SHEET	REV	DESCRIPTION	DATE	BY
1-13	D	REVISED PER DADE LETTER DATED 01/22/09	01/27/09	TJH
1-13	C	REVISED PER DADE LETTER DATED 11/09/08	11/24/08	TJH
9	B	General revision and update to 2007 FBC	06/03/08	RJK
9	A	Corrected per Dade county letter dated May 13, 2007	08/17/07	DRL

REVISIONS

LUIS R. LOMAS P.E.
Luis R. Lomas
8/9/09
FLORIDA REGISTRATION
NO. 62514

WinDoor INCORPORATED
7500 AMSTERDAM DRIVE
ORLANDO, FL 32832
Phone: 407.481.8400
Fax: 407.481.0505
www.windoorinc.com

Dwg Title:
8000 SERIES SGD SMI 2T WS/NS RETRO SILL WITH
5'0 x 8'2 PANELS - GLAZING DETAILS

SIZE	Drn By:	DWG NO.	REV
B	TJH	06-10-2135	D

SCALE N.T.S. | DATE: 02/28/07 | SHEET 9 of 13

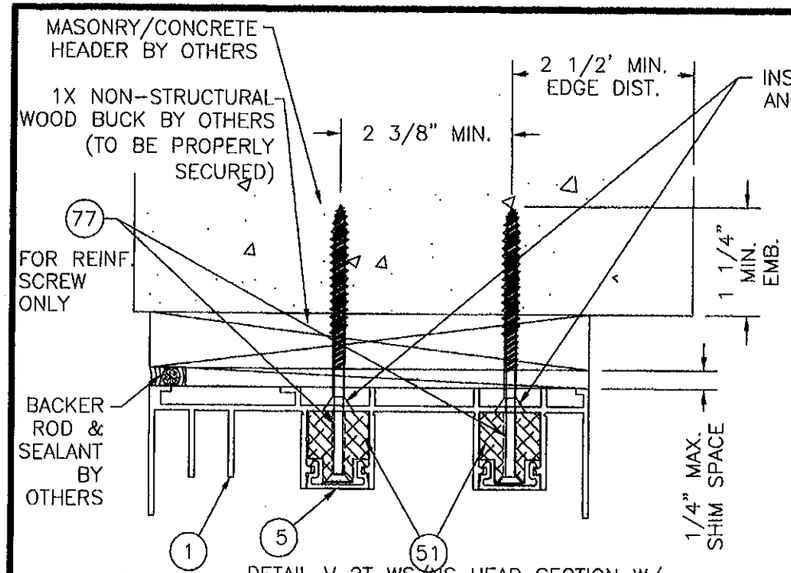

DETAIL V 2T WS/NS HEAD SECTION W/
ITEM #51 TO MASONRY/CONCRETE
VERTICAL CONDITION 1 V, W & X (SEE NOTE 2)
(1X BUCK TO BE PROPERLY SECURED)

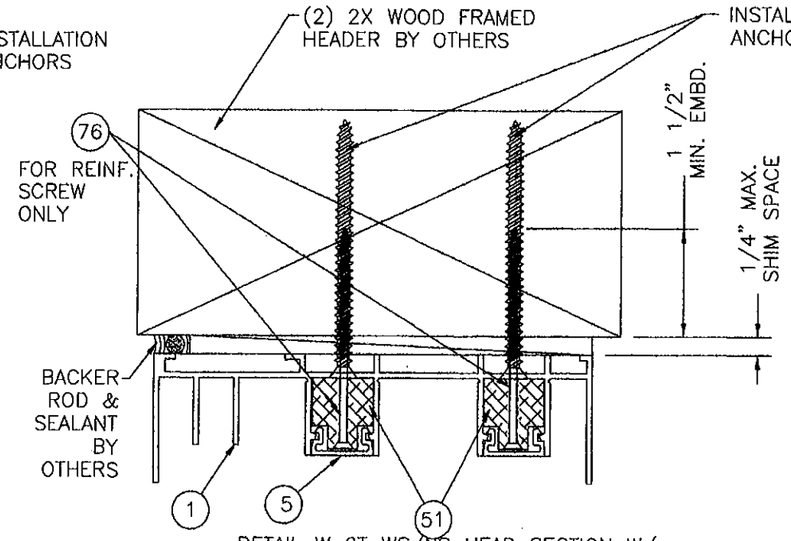

DETAIL W 2T WS/NS HEAD SECTION W/
ITEM #51 TO 2X WOOD FRAME
VERTICAL CONDITION 1 V, W, & X (SEE NOTE 2)

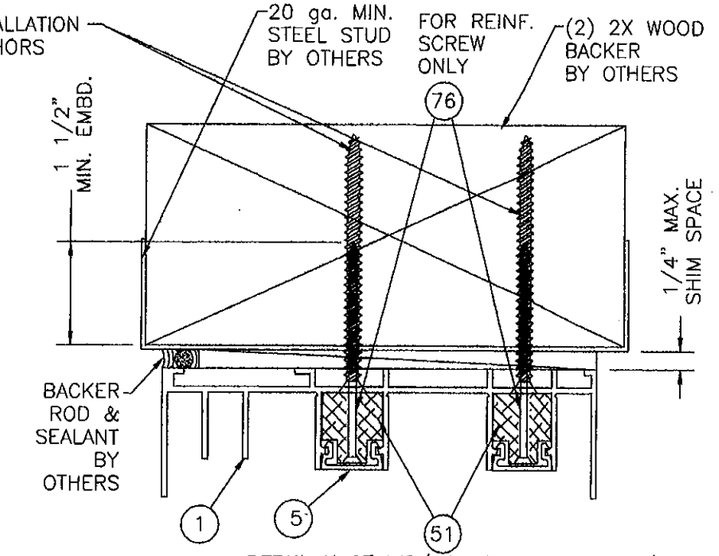

DETAIL X 2T WS/NS HEAD SECTION W/
ITEM #51 TO 2X WOOD BACKED STEEL FRAME
VERTICAL CONDITION 1 V, W & X (SEE NOTE 2)

NOTES:
1. DOOR PANELS ARE NOT SHOWN FOR CLARITY OF ITEM #51, H.P. HEAD REINFORCING BAR.
2. SECTIONS V, W & X ARE SHOWN AT A VERTICAL CONDITION WHERE THERE IS A PANEL ON BOTH TRACKS, CONDITION 1.
   SECTIONS Y & Z ARE SHOWN AT VERTICAL CONDITION WHERE THERE IS ONLY ONE PANEL IN ONE TRACK, CONDITION 2.
3. ITEM #51, HEAD REINFORCEMENT BAR, MUST BE CENTERED BETWEEN CENTER THREE INSTALLATION FASTENERS IN CLUSTER PATTERN AT HEAD VERTICAL CONDITION.

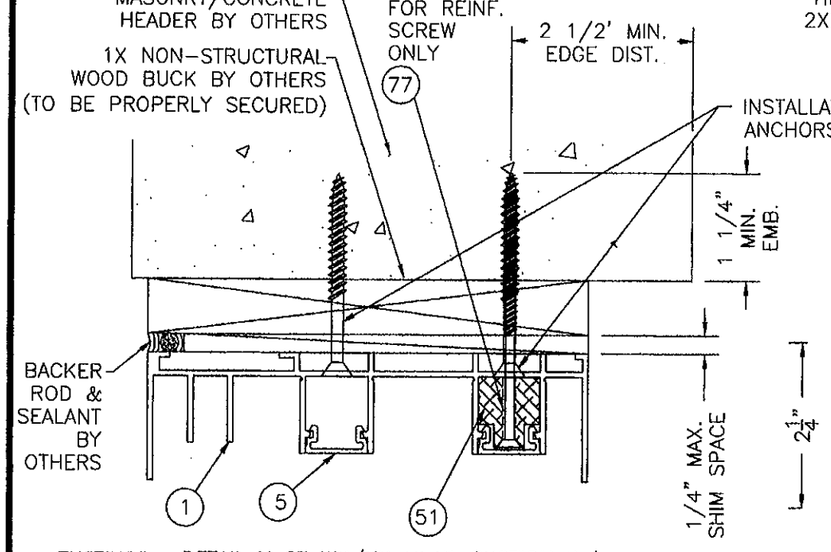

DETAIL Y 2T WS/NS HEAD SECTION W/
ITEM #51 TO MASONRY/CONCRETE
VERTICAL CONDITION 2
(1X TO BE PROPERLY SECURED)

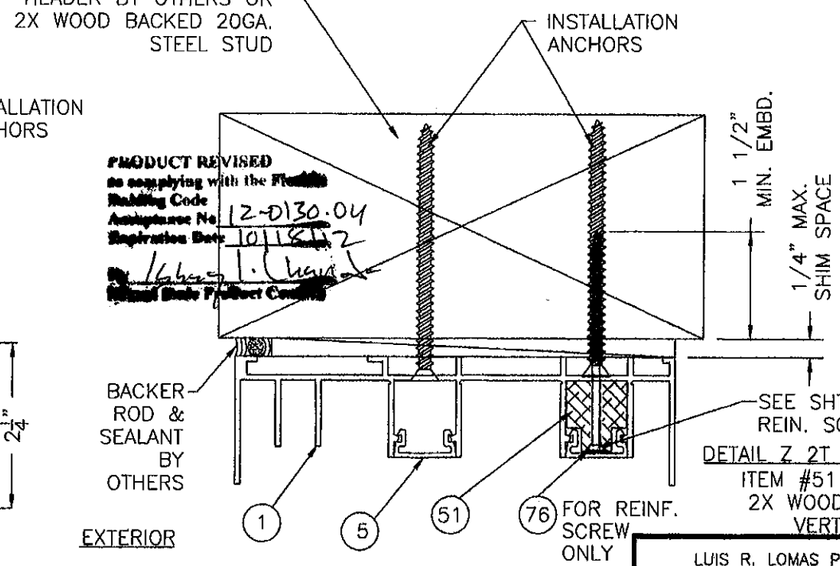

DETAIL Z 2T WS/NS HEAD SECTION W/
ITEM #51 TO 2X WOOD FRAME/
2X WOOD BACKED STEEL STUD
VERTICAL CONDITION 2

ALL CROSS SECTIONS ARE SHOWING REINFORCEMENT INSTALLATION ONLY

SHEET	REV	DESCRIPTION	DATE	BY
1-13	D	REVISED PER DADE LETTER DATED 01/22/09	01/27/09	TJH
1-13	C	REVISED PER DADE LETTER DATED 11/09/08	11/24/08	TJH
10	B	General revision and update to 2007 FBC	06/03/08	RJK
10	A	Corrected per Dade county letter dated May 13, 2007	08/17/07	DRL

REVISIONS

PRODUCT REVISED
as complying with the Florida Building Code
Acceptance No. 08-1010.09
Expiration Date OCT 18, 2012
By Miami Dade Product Control Division

LUIS R. LOMAS P.E.
2/9/09
FLORIDA REGISTRATION NO. 62514

WinDoor INCORPORATED
7500 AMSTERDAM DRIVE
ORLANDO, FL 32832
Phone: 407.481.8400
Fax: 407.481.0505
www.windoorinc.com

Dwg Title:
8000 SERIES SGD SMI 2T WS/NS RETRO SILL WITH 5'0 x 8'2 PANELS – VERT. CONDITIONS VERT. SECTIONS

SIZE	Drn By:	DWG NO.	REV
B	TJH	06-10-2135	D

SCALE N.T.S. | DATE: 02/28/07 | SHEET 10 of 13

BILL OF MATERIAL

NO.	PART NO.	DESCRIPTION	
1	FS01846	2T WS FRAME HEAD	BY KEYMARK A6063-T6
2	FS01845	2T WS/NS FRAME JAMB	BY KEYMARK A6063-T6
3	FS03435	2T WS/NS 3 1/2" HIGH RETRO SILL PAN	BY KEYMARK A6063-T5
4	FS03436	2T WS RETRO SILL INSERT	BY KEYMARK A6063-T5
5	FS01882	FRAME HEAD INSERT	BY KEYMARK A6063-T6
6	FS02726	STILE JAMB INSERT	BY KEYMARK A6063-T6
7	FH01869	TOP & BOTTOM RAIL	BY KEYMARK A6063-T6
8	FH01871	LOCK STILE	BY KEYMARK A6063-T5
9	FS01883	FRAME JAMB INSERT	BY KEYMARK A6063-T5
10	FH02491	PANEL INTERLOCK STILE	BY KEYMARK A6063-T6
11	FH02165	FEMALE BUTT STILE	BY KEYMARK A6063-T5
12	FH01877	9/16" HORIZONTAL GLASS STOP	BY KEYMARK A6063-T5
13	FH01878	9/16" VERTICAL GLASS STOP	BY KEYMARK A6063-T5
14	FS02643	ROLLER BACKUP	BY KEYMARK A6063-T6
15	#1988-9000	TANDEM ROLLER W/DELRIN WHEELS	
16		9/16" LAMIN H.S. GLASS W/0.060" SOLUTIA SAFLEX PVB INTERLAYER, TYPE C	
17	NSB 3/16-3/4-2	GLASS SETTING BLOCK	
18	TP1066	GLASS STOP VINYL FOR 9/16" GLASS STOPS	
19	SIKA 552	WET GLAZE	
20	W33351NK0000	TOP & BOTTOM RAIL FINSEAL 0.187 X 0.350	
21	W33221NK0000	INTERLOCK FINSEAL 0.187 X 0.220	
22		PANEL STILE FINSEAL 0.187 X 0.220	
23		SILL INSERT ASSY. SCREW #8 X 7/16" PH TYPE F SS	
24		ROLLER INSTALL. SCREWS #8 X 5/8 PH TYPE F SS	
25		PANEL ASSEMBLY SCREW #10 X 1 1/4 TYPE F SS	
26		FRAME ASSEMBLY SCREW #8 X 5/8 PH TYPE F SS	
27		#14 WOOD SCREW INSTALL ANCHOR-1 1/2" MIN. EMB	
28		SILICONE CAULK OR NON-SHRINK GROUT	
29	P7569AM	.750" HIGH X 1.50" X 2.25" DUAL FINNED DUST PAD	
30		1/4" DIA. x 2 3/4" ELCO CRETE-FLEX SS4 MASONRY SCREW	
31	TP876	INTERLOCK BUMPER	
32	NRAHP	PANEL HEIGHT ADJUSTMENT PLUGS	
33	NPG	NYLON PANEL GUIDE	
34	V988B	GLAZING TAPE 1/4" X 3/8" FOR 9/16" GLASS	
35	1414	OLYMPUS HANDLE SET	
36	2468	DUAL POINT MORTISE LOCK & KEEPER SET	
37		#8 x 3/4" PAN HEAD TEKS SCREW	
38	FS02641	SGD REINFORCING BAR	BY KEYMARK A6061-T6
39		9/16" LAMIN H.S. GLASS W/0.060" DUPONT PVB INTERLAYER, TYPE A	
40	#1988-9000 SS	TANDEM ROLLER W/STAINLESS STEEL WHEELS	
41	FS03471	2T NS RETRO SILL INSERT	BY KEYMARK A6063-T5
42	FS02208	SGD FRAME SILL COVER	BY KEYMARK A6063-T5
43	FS02210	SGD FRAME HEAD COVER	BY KEYMARK A6063-T5
44	FS03588	8K/6K HEAD BUMPER CLIP	BY KEYMARK A6063-T6
45	FS03587	8K/6K FRAME SNAP-IN BUMPER	BY KEYMARK A6063-T6
46		PANEL STILE @ BUTT STILE FINSEAL 0.187" x 0.220"	
47		1" IG TEMP LAMIN GLASS W/0.060" DUPONT PVB INTERLAYER, TYPE B	
48		1" IG TEMP LAMIN GLASS W/0.060" SOLUTIA SAFLEX PVB INTERLAYER, TYPE D	
49	FH01879	1" HORIZONTAL GLASS STOP	BY KEYMARK
50	FH01880	1" VERTICAL GLASS STOP	BY KEYMARK
51	FS03656	SGD H. P. HEAD REIN. BAR	BY KEYMARK A6005-T5
52	FH03569	H.P. INTERLOCK REIN. BAR	BY KEYMARK A6061-T6
53	FH03570	BUTT STILE REIN BAR	BY KEYMARK A6061-T6
54	TP166	SILL INSERT VINYL WEEP FLAP	BY TEAM PLASTICS
55	FS02726	PANEL STILE JAMB INSERT	BY KEYMARK A6063-T6
56	W33221NK0000	HEAD & SILL COVER FINSEAL 0.187 X 0.350	
59		1/4" DIA. x 2 1/4" ELCO CRETE-FLEX SS4 MASONRY SCREW	
60		SCREEN ASSEMBLY SCREW #8 x 1 1/4" SQD PH TYPE A	
61	PJS-7623-09-SN	SCREEN ROLLER, SULLIVAN	
62	FH02300	WS SCREEN BOTTOM RAIL	BY KEYMARK A6063-T6

BILL OF MATERIAL

NO.	PART NO.	DESCRIPTION	
63	FH02300	WS SCREEN TOP RAIL	BY KEYMARK A6063-T6
64	FH02395	WS SCREEN STILE	BY KEYMARK A6063-T6
65	FS02209	WS SCREEN SWEEP	BY KEYMARK A6063-T6
66		0.187" X 0.130" FINSEAL	
67	SGD200	SCREEN HANDLE & LOCK, SULLIVAN	
68		FIBERGLASS SCREEN MESH	
69		SCREEN SPLINE	
70	FH01851	HIGH BOTTOM RAIL	BY KEYMARK A6063-T5
73	FH02644	HIGH BOTTOM RAIL ROLL BACKUP	BY KEYMARK A6063-T6
74		#8 x 2" PHILLIPS FLAT HEAD TEK SCREW	
75		#8 x 1 1/2" PHILLIPS FLAT HEAD TEK SCREW	
76		#8 x 3" PHILLIPS FLAT HEAD WOOD SCREW	
77		3/16" DIA. x 3 3/4" ELCO PHILLIPS FLAT HEAD TAPCON	
78	V984B	GLAZING TAPE 1/8" X 3/8" FOR 1" GLASS	
79	FH02647	SGD BUTT SCREEN ADAPTER	BY KEYMARK A6063-T6
80	TP1051	GLASS STOP VINYL FOR 1" GLASS STOPS	
81		INTERLOCK PANEL ASSEMBLY SCREW #10 X 3/4 TYPE F SS	
82		RUBBER BUMPER, BLACK SRB 50 - 60 DUROMETER	
83	FS03809	FRAME BUMPER JAMB INSERT	BY KEYMARK A6063-T6

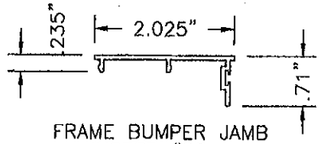

FRAME BUMPER JAMB INSERT #83

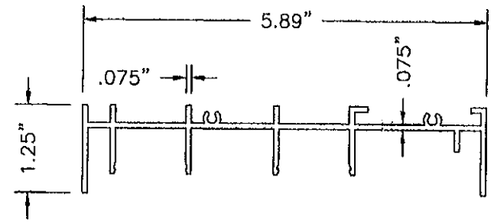

2T WS/NS JAMB #2

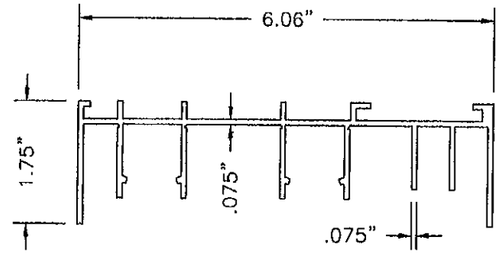

2T WS/NS HEAD #1

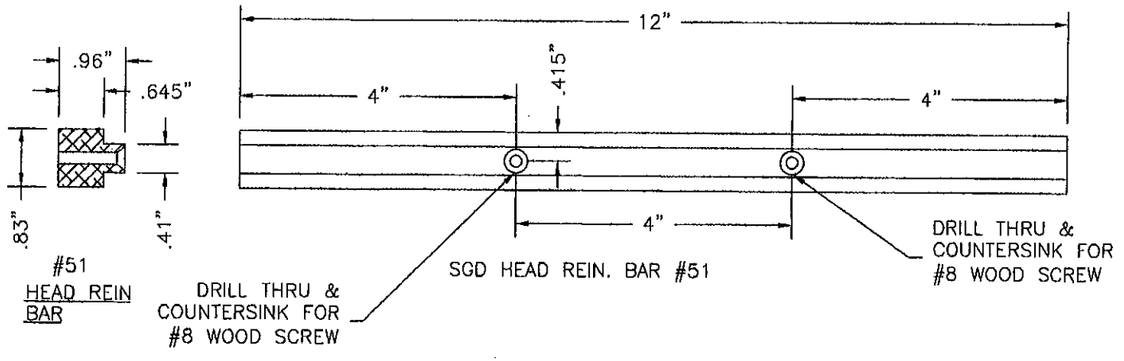

#51 HEAD REIN BAR

DRILL THRU & COUNTERSINK FOR #8 WOOD SCREW

SGD HEAD REIN. BAR #51

DRILL THRU & COUNTERSINK FOR #8 WOOD SCREW

PRODUCT REVISED
as complying with the Florida Building Code
Acceptance No. 12-0130.04
Expiration Date 10/18/12
By Ishaq I. Chanda
Miami-Dade Product Control

PRODUCT REVISED
as complying with the Florida Building Code
Acceptance No. 08-1010.09
Expiration Date OCT 18, 2012
By Ishaq I. Chanda
Miami-Dade Product Control Division

ITEMS 24, 32, 33, 61, 62, 64, 65 & 67 ARE USED BUT NOT SHOWN IN CROSS SECTIONS FOR CLARITY.

BILL OF MATERIALS ITEM NUMBERS 57, 58, 71 AND 72 ARE NOT USED.

SHEET	REV	DESCRIPTION	DATE	BY
1-13	D	REVISED PER DADE LETTER DATED 01/22/09	01/27/07	TJH
1-13	C	REVISED PER DADE LETTER DATED 11/09/08	11/24/08	TJH
11	B	General revision and update to 2007 FBC	06/03/08	RJK
11	A	Corrected per Dade county letter dated May 13, 2007	08/17/07	DRL

REVISIONS

LUIS R. LOMAS P.E.
2/9/09
FLORIDA REGISTRATION NO. 62514

WinDoor INCORPORATED
7500 AMSTERDAM DRIVE
ORLANDO, FL 32832
Phone: 407.481.8400
Fax: 407.481.0505
www.windoorinc.com

Dwg Title:
8000 SERIES SGD SMI 2T WS/NS RETRO SILL WITH 5'0 x 8'2 PANELS - B.O.M. & UNIT COMPONENTS

SIZE	Drn By:	DWG NO.	REV
B	TJH	06-10-2135	D

SCALE	DATE:	SHEET
N.T.S.	02/28/07	11 of 13

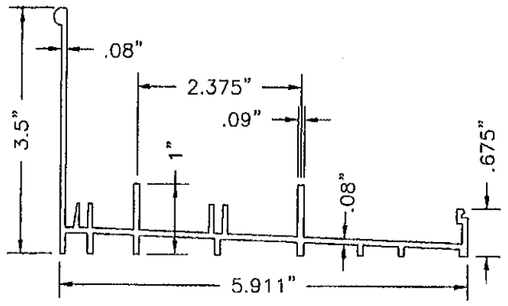

2T RETRO WS/NS SILL PAN #3

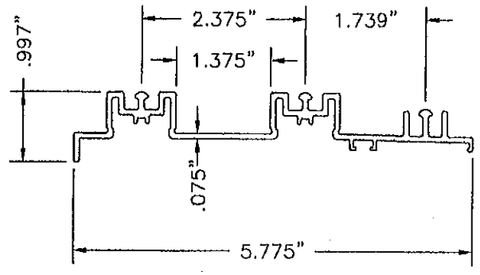

2T RETRO WS SILL INSERT #4

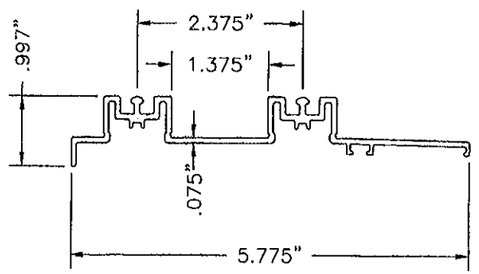

2T RETRO NS SILL INSERT #41

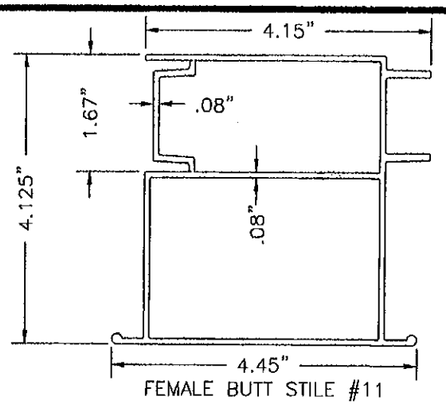

FEMALE BUTT STILE #11

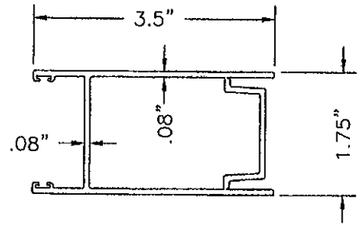

LOCK STILE #8

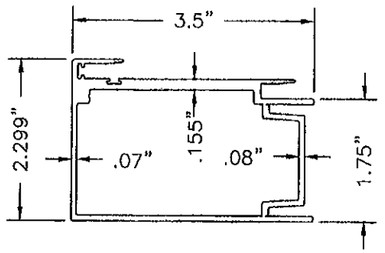

INTERLOCK STILE #10

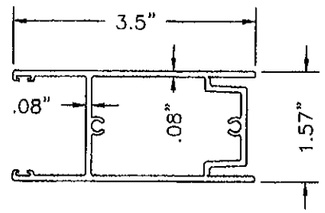

TOP/BOTTOM RAIL #7

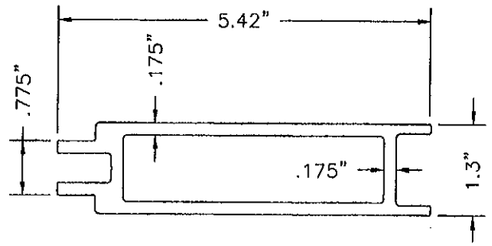

HIGH BOTTOM ROLLER BACKUP #73

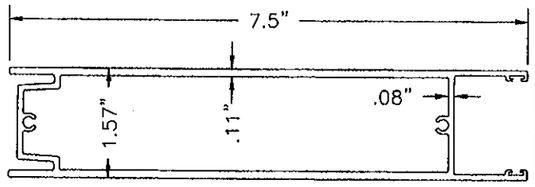

HIGH BOTTOM RAIL #70

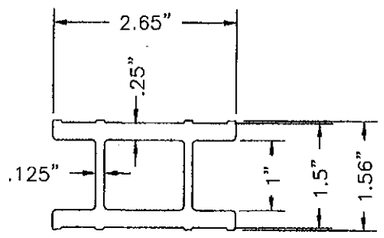

SGD REIN. BAR #38

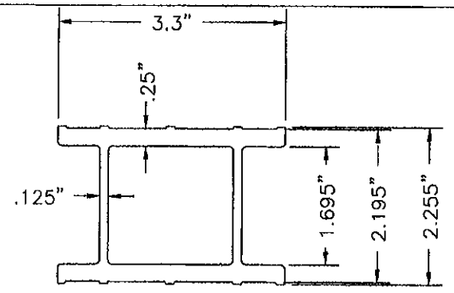

BUTT STILE REIN. BAR #53

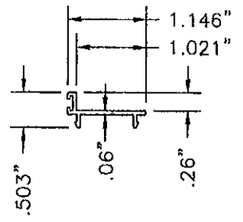

WS SCREEN SWEEP #65

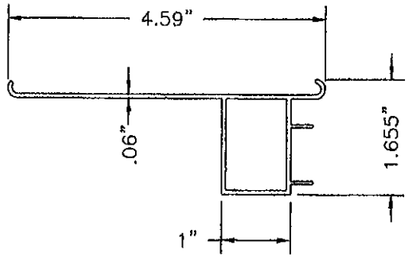

BUTT SCREEN ADAPTER #79

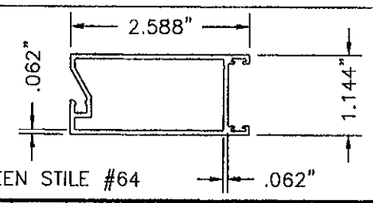

WS SCREEN STILE #64

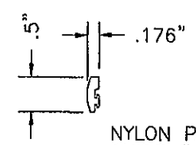

NYLON PANEL GUIDE #33

PRODUCT REVISED
as complying with the Florida Building Code
Acceptance No 12-0130.04
Expiration Date 10/18/12
By Ishaq I. Lhaula
Miami Dade Product Control

PRODUCT REVISED
as complying with the Florida Building Code
Acceptance No 08-1010.09
Expiration Date OCT 18, 2012
By Ishaq I. Lhaula
Miami Dade Product Control Division

SHEET	REV	DESCRIPTION	DATE	BY
1-13	D	REVISED PER DADE LETTER DATED 01/22/09	01/27/09	TJH
1-13	C	REVISED PER DADE LETTER DATED 11/09/08	11/24/08	TJH
12	B	General revision and update to 2007 FBC	06/03/08	RJK
12	A	Corrected per Dade county letter dated May 13, 2007	08/17/07	DRL

REVISIONS

LUIS R. LOMAS P.E.

Luis R. Lomas
2/9/09

FLORIDA REGISTRATION NO. 62514

WinDoor INCORPORATED
7500 AMSTERDAM DRIVE
ORLANDO, FL 32832
Phone: 407.481.8400
Fax: 407.481.0505
www.windoorinc.com

Dwg Title:
8000 SERIES SGD SMI 2T WS/NS RETRO SILL WITH 5'0 x 8'2 PANELS – UNIT COMPONENTS

SIZE	Drn By:	DWG NO.	REV
B	TJH	06-10-2135	D

SCALE N.T.S. | DATE: 02/28/07 | SHEET 12 of 13

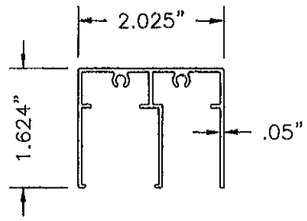

8K/6K HEAD BUMPER CLIP #44

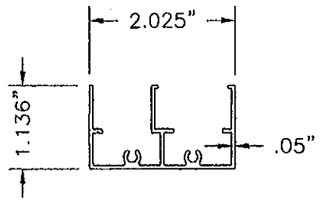

8K/6K SNAP-IN BUMPER #45

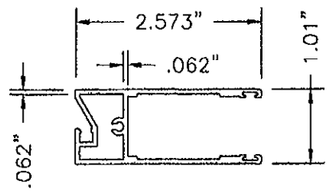

WS SCREEN BOTTOM RAIL #62
WS SCREEN TOP RAIL #63

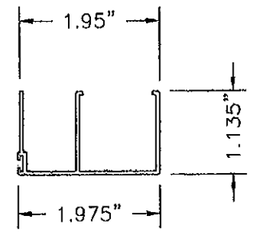

SGD FRAME HEAD COVER #43

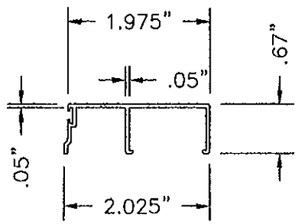

SGD FRAME SILL COVER #42

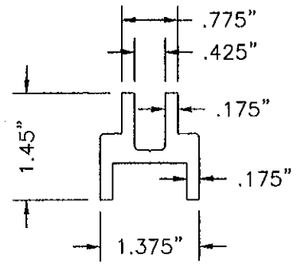

ROLLER BACKUP #14

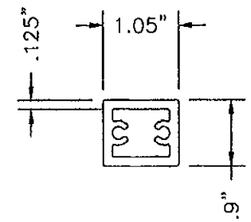

H.P. INTERLOCK REIN. BAR #52

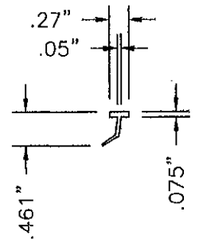

VINYL WEEP FLAP #54

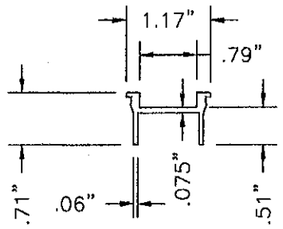

STILE JAMB INSERT #6
PANEL STILE JAMB INSERT #55

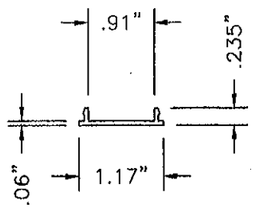

FRAME JAMB INSERT #9

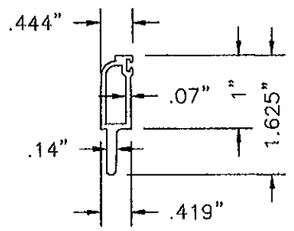

9/16" HORT. GLASS STOP #12

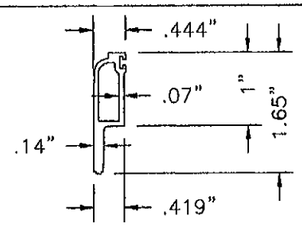

9/16" VERT. GLASS STOP #13

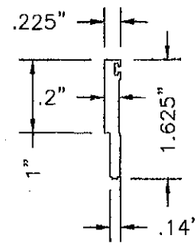

1" HORT. GLASS STOP #49

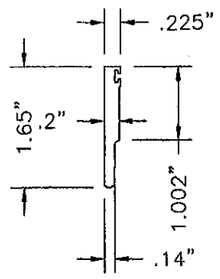

1" VERT. GLASS STOP #50

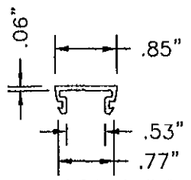

FRAME HEAD INSERT #5

PRODUCT REVISED
as complying with the Florida Building Code
Acceptance No 12-0130.04
Expiration Date 10/18/12
By Ichag I. Chanate
Miami Dade Product Control Division

PRODUCT REVISED
as complying with the Florida Building Code
Acceptance No 08-1010.09
Expiration Date OCT 18, 2012
By Ichag I. Chanate
Miami Dade Product Control Division

SHEET	REV	DESCRIPTION	DATE	BY
1-13	D	REVISED PER DADE LETTER DATED 01/22/09	01/27/09	TJH
1-13	C	REVISED PER DADE LETTER DATED 11/09/08	11/24/08	TJH
13	B	General revision and update to 2007 FBC	06/03/08	RJK
13	A	Corrected per Dade county letter dated May 13, 2007	08/17/07	DRL

REVISIONS

LUIS R. LOMAS P.E.
2/9/09
FLORIDA REGISTRATION NO. 62514

WinDoor INCORPORATED
7500 AMSTERDAM DRIVE
ORLANDO, FL 32832
Phone: 407.481.8400
Fax: 407.481.0505
www.windoorinc.com

Dwg Title:
8000 SERIES SGD SMI 2T WS/NS RETRO SILL WITH 5'0 x 8'2 PANELS - UNIT COMPONENTS

SIZE	Drn By:	DWG NO.	REV
B	TJH	06-10-2135	D

SCALE N.T.S. | DATE: 02/28/07 | SHEET 13 of 13