MIAMI-DADE COUNTY
DEPARTMENT OF PERMITTING, ENVIRONMENT, AND REGULATORY AFFAIRS (PERA)
BOARD AND CODE ADMINISTRATION DIVISION

NOTICE OF ACCEPTANCE (NOA)

MIAMI-DADE COUNTY
PRODUCT CONTROL SECTION
11805 SW 26 Street, Room 208
Miami, Florida 33175-2474
T (786) 315-2590 F (786) 315-2599
www.miamidade.gov/pera/

WinDoor, Incorporated
7500 Amsterdam drive
Orlando, Florida, 32832

SCOPE:

This NOA is being issued under the applicable rules and regulations governing the use of construction materials. The documentation submitted has been reviewed and accepted by Miami-Dade County PERA -Product Control Section to be used in Miami Dade County and other areas where allowed by the Authority Having Jurisdiction (AHJ).

This NOA shall not be valid after the expiration date stated below. The Miami-Dade County Product Control Section (In Miami Dade County) and/or the AHJ (in areas other than Miami Dade County) reserve the right to have this product or material tested for quality assurance purposes. If this product or material fails to perform in the accepted manner, the manufacturer will incur the expense of such testing and the AHJ may immediately revoke, modify, or suspend the use of such product or material within their jurisdiction. PERA reserves the right to revoke this acceptance, if it is determined by Miami-Dade County Product Control Section that this product or material fails to meet the requirements of the applicable building code.
This product is approved as described herein, and has been designed to comply with the Florida Building Code, including the High Velocity Hurricane Zone.

DESCRIPTION: Series "8000" Aluminum Sliding Glass Door W/ Reinforcements-L. M. Impact

APPROVAL DOCUMENT: Drawing No. **WIND0081,** titled "Series 8000 SGD Large Missile 5'0 X 8'0 Panels", sheets 1 through 14 of 14, prepared by manufacturer, dated 09/13/04 and last revised on 01/04/10, signed and sealed by Luis R. Lomas, P.E., bearing the Miami-Dade County Product Control Revision stamp with the Notice of Acceptance number and expiration date by the Miami-Dade County Product Control Division.

MISSILE IMPACT RATING: Large and Small Missile Impact Resistant

Limitations:

1. Reinforcement item **#34** shall be aluminum **6061-T6**. See elevation sheets 1, 2, 7, 8 & 9 for reinforcement locations and sheet 11 for glazing option.
2. Pocket hook installation condition (sheet 9) hook strip anchors not to exceed **5.7"** O. C. The frame jambs require two anchors per location per tracks (see note 2, sheet 3). Frame jamb anchors are 18" O.C. max

LABELING: Each unit shall bear a permanent label with the manufacturer's name or logo, city, state and series and following statement: "Miami-Dade County Product Control Approved", unless otherwise noted herein.

RENEWAL of this NOA shall be considered after a renewal application has been filed and there has been no change in the applicable building code negatively affecting the performance of this product.

TERMINATION of this NOA will occur after the expiration date or if there has been a revision or change in the materials, use, and/or manufacture of the product or process. Misuse of this NOA as an endorsement of any product, for sales, advertising or any other purposes shall automatically terminate this NOA. Failure to comply with any section of this NOA shall be cause for termination and removal of NOA.

ADVERTISEMENT: The NOA number preceded by the words Miami-Dade County, Florida, and followed by the expiration date may be displayed in advertising literature. If any portion of the NOA is displayed, then it shall be done in its entirety.

INSPECTION: A copy of this entire NOA shall be provided to the user by the manufacturer or its distributors and shall be available for inspection at the job site at the request of the Building Official.
This NOA **revises NOA # 08-1107.06** and consists of this page 1 and evidence pages E-1, as well as approval document mentioned above.
The submitted documentation was reviewed by **Ishaq I. Chanda, P.E.**

MIAMI-DADE COUNTY APPROVED

4/13/12

NOTICE OF ACCEPTANCE: EVIDENCE SUBMITTED

A. DRAWINGS

1. Manufacturer's die drawings and sections (transferred from file # **08-1107.06**)
2. Drawing No. **WIND0081,** titled "Series 8000 SGD Large Missile 5'0 X 8'0 Panels", sheets 1 through 14 of 14, prepared by manufacturer, dated 09/13/04 and last revised on 01/04/10, signed and sealed by Luis R. Lomas, P.E.

Note: This revision consists of FBC 2010 update only.

B. TESTS (transferred from file # **08-1107.06**)

1. Test reports on: 1) Air Infiltration Test, per FBC, TAS 202-94
   2) Uniform Static Air Pressure Test, Loading per FBC TAS 202-94
   3) Water Resistance Test, per FBC, TAS 202-94
   4) Large Missile Impact Test per FBC, TAS 201-94
   5) Cyclic Wind Pressure Loading per FBC, TAS 203-94
   6) Forced Entry Test, per FBC 2411 3.2.1, TAS 202-94

Along with marked-up drawings and installation diagram of Aluminum Sliding Glass, prepared by National Certified Testing Laboratories Inc, Test Report No. **NCTL-210-3040-2**, dated 07/28/04 signed & sealed by Gerald J, Ferrara, P.E.
(Note: This test report has been revised by addendum letters 10/03/08 and March 20, 2009, issued by National Certified Testing Lab. , signed & sealed by Gerald J, Ferrara, P.E.)

C. CALCULATIONS

1. Statement letter of conformance to FBC 2010, dated January 19, 2012, prepared, signed and sealed by Luis R. Lomas, P.E.
2. Anchor verification calculations complying w/ FBC-2007, dated 10-07-08 and last revised on 05-13-2009, prepared, signed and sealed by Luis R. Lomas, P.E. (transferred from file # **08-1107.06**).
3. Glazing complies with ASTME-1300-02 &-04

D. QUALITY ASSURANCE

1. Miami Dade Department of Permitting, Environment, and Regulatory Affairs (PERA).

E. MATERIAL CERTIFICATIONS

1. Notice of Acceptance No. **08-1224.04** issued to Solutia, for "Saflex Composite glass interlayer w/ PET core", expiring on 12/11/2013.

F. STATEMENTS

1. Statement letter of conformance to FBC 2010 and "No financial interest", dated 01/19/12, prepared, signed and sealed by Luis R. Lomas, P.E.
2. Statement letters of conformance to FBC 2007 and "No financial interest", both dated 10/07/08, signed and sealed by Luis R. Lomas, P.E. (transferred from file # **08-1107.06**)
3. Statement letter dated 11/24/2008, issued by Windoor, acknowledging use of proper Vanciva & SGP laminate thickness for LMI use, signed by Russell T. Traficante.
4. Lab compliance statement, as part of above referenced test report.

G. OTHER

1. This NOA **revises** NOA # **08-1107.06**, expiring on March 17, 2015.

Ishaq I. Chanda

Ishaq I. Chanda, P.E.
Product Control Examiner
NOA No 12-0130.06
Expiration Date: March 17, 2015
Approval Date: April 12, 2012

GENERAL NOTES:

1) THE PRODUCT SHOWN HEREIN IS DESIGNED AND MANUFACTURED TO COMPLY WITH THE REQUIREMENTS OF THE CURRENT FLORIDA BUILDING CODE INCLUDING THE HVHZ.
2) 1X OR 2X WOOD BUCK, STEEL OR WOOD FRAMING TO BE DESIGNED AND ANCHORED TO PROPERLY TRANSFER ALL LOADS TO STRUCTURE, BUCK OR FRAMING IS RESPONSIBILITY OF ARCHITECT OF RECORD.
3) PRODUCTS ARE APPROVED FOR USE WHERE LARGE MISSILE IMPACT RESISTANCE IS REQUIRED. IMPACT PROTECTIVE SYSTEM IS NOT REQUIRED.
4) SEE DESIGN PRESSURE CHART AND APPROVED CONFIGURATION TABLE SHEET 1.
5) OPERABLE PANEL MUST COMPLY WITH MINIMUM HEIGHT AND WIDTH REQUIREMENTS FOR FBC.

APPROVED CONFIGURATION TABLE	
2 TRACK	XO, OX, XX, OXO, OXXO, XXXX, PX, XP, PXX, PXXP, PXXXXP
3 TRACK	XXX, OXX, XXO, OXXX, XXXO, XXXX, PXXX, XXXP, PXXXP
4 TRACK	XXXX, OXXX, XXXO, PXXXX, XXXXP, PXXXXP

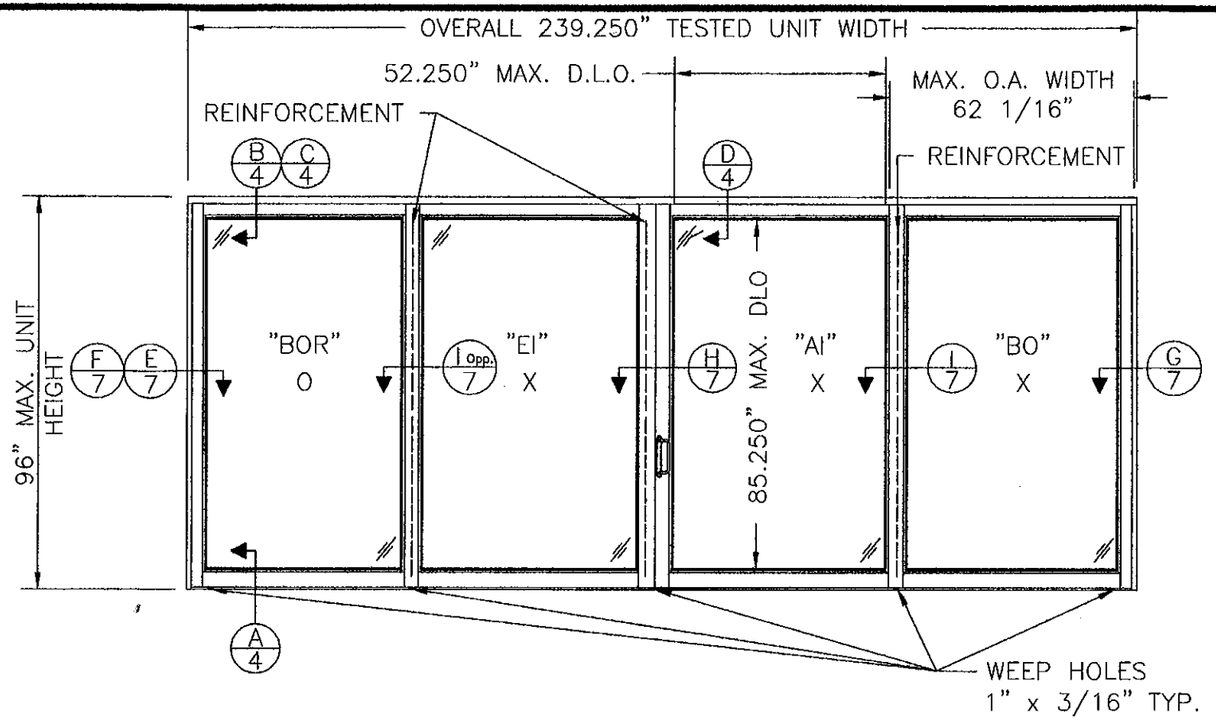

Maximum design pressure per comparison per comparison with 1 1/2" Sill Riser
Series 8000 Series Reinforced Multi-track Large Missile Impact 5'0"x8'0" Panels

Unit Height (in)	Single Panel width (in)													
	24.0		30.0		36.0		42.0		48.0		54.0		60.0	
	Pos	Neg	Pos	Neg	Pos	Neg	Pos	Neg	Pos	Neg	Pos	Neg	Pos	Neg
80.0	40.0	120.0	40.0	120.0	40.0	120.0	40.0	120.0	40.0	120.0	40.0	120.0	40.0	120.0
84.0	40.0	120.0	40.0	120.0	40.0	120.0	40.0	120.0	40.0	120.0	40.0	120.0	40.0	120.0
90.0	40.0	120.0	40.0	120.0	40.0	120.0	40.0	120.0	40.0	120.0	40.0	116.4	40.0	110.0
96.0	40.0	120.0	40.0	120.0	40.0	120.0	40.0	120.0	40.0	114.6	40.0	106.3	40.0	100.0

Maximum design pressure per comparison per comparison with 2 1/4" Sill Riser
Series 8000 Series Reinforced Multi-track Large Missile Impact 5'0"x8'0" Panels

Unit Height (in)	Single Panel width (in)													
	24.0		30.0		36.0		42.0		48.0		54.0		60.0	
	Pos	Neg	Pos	Neg	Pos	Neg	Pos	Neg	Pos	Neg	Pos	Neg	Pos	Neg
80.0	60.0	120.0	60.0	120.0	60.0	120.0	60.0	120.0	60.0	120.0	60.0	120.0	60.0	120.0
84.0	60.0	120.0	60.0	120.0	60.0	120.0	60.0	120.0	60.0	120.0	60.0	120.0	60.0	120.0
90.0	60.0	120.0	60.0	120.0	60.0	120.0	60.0	120.0	60.0	120.0	60.0	116.4	60.0	110.0
96.0	60.0	120.0	60.0	120.0	60.0	120.0	60.0	120.0	60.0	114.6	60.0	106.3	60.0	100.0

Maximum design pressure per comparison per comparison with 3" Sill Riser
Series 8000 Series Reinforced Multi-track Large Missile Impact 5'0"x8'0" Panels

Unit Height (in)	Single Panel width (in)													
	24.0		30.0		36.0		42.0		48.0		54.0		60.0	
	Pos	Neg	Pos	Neg	Pos	Neg	Pos	Neg	Pos	Neg	Pos	Neg	Pos	Neg
80.0	80.0	120.0	80.0	120.0	80.0	120.0	80.0	120.0	80.0	120.0	80.0	120.0	80.0	120.0
84.0	80.0	120.0	80.0	120.0	80.0	120.0	80.0	120.0	80.0	120.0	80.0	120.0	80.0	120.0
90.0	80.0	120.0	80.0	120.0	80.0	120.0	80.0	120.0	80.0	120.0	80.0	116.4	80.0	110.0
96.0	80.0	120.0	80.0	120.0	80.0	120.0	80.0	120.0	80.0	114.6	80.0	106.3	80.0	100.0

Maximum design pressure per comparison per comparison with 3 1/2" Sill Riser
Series 8000 Series Reinforced Multi-track Large Missile Impact 5'0"x8'0" Panels

Unit Height (in)	Single Panel width (in)													
	24.0		30.0		36.0		42.0		48.0		54.0		60.0	
	Pos	Neg	Pos	Neg	Pos	Neg	Pos	Neg	Pos	Neg	Pos	Neg	Pos	Neg
80.0	100.0	120.0	100.0	120.0	100.0	120.0	100.0	120.0	100.0	120.0	100.0	120.0	100.0	120.0
84.0	100.0	120.0	100.0	120.0	100.0	120.0	100.0	120.0	100.0	120.0	100.0	120.0	100.0	120.0
90.0	100.0	120.0	100.0	120.0	100.0	120.0	100.0	120.0	100.0	120.0	100.0	116.4	100.0	110.0
96.0	100.0	120.0	100.0	120.0	100.0	120.0	100.0	120.0	100.0	114.6	100.0	106.3	100.0	100.0

Maximum design pressure per comparison per comparison with 4 1/4" Sill Riser
Series 8000 Series Reinforced Multi-track Large Missile Impact 5'0"x8'0" Panels

Unit Height (in)	Single Panel width (in)													
	24.0		30.0		36.0		42.0		48.0		54.0		60.0	
	Pos	Neg	Pos	Neg	Pos	Neg	Pos	Neg	Pos	Neg	Pos	Neg	Pos	Neg
80.0	100.0	120.0	100.0	120.0	100.0	120.0	100.0	120.0	100.0	120.0	100.0	120.0	100.0	120.0
84.0	100.0	120.0	100.0	120.0	100.0	120.0	100.0	120.0	100.0	120.0	100.0	120.0	100.0	120.0
90.0	100.0	120.0	100.0	120.0	100.0	120.0	100.0	120.0	100.0	120.0	100.0	116.4	100.0	110.0
96.0	100.0	120.0	100.0	120.0	100.0	120.0	100.0	120.0	100.0	114.6	100.0	106.3	100.0	100.0

8000 OXXX REINFORCED SLIDING GLASS DOOR 2 TRACK
"BOR" PANEL (FIXED) = 61 5/16" X 94 5/16
"EI" PANEL (ACTIVE) = 62 1/16" X 94 5/16"
"AI" PANEL (ACTIVE) = 61 5/16" X 94 5/16"
"BO" PANEL (ACTIVE) = 61 5/16" X 94 5/16"

PRODUCT REVISED
as complying with the Florida Building Code
Acceptance No. 12-0130.06
Expiration Date MAR 17, 2015
By Ishaq I. Chanda
Miami-Dade Product Control

PRODUCT RENEWED
as complying with the Florida Building Code
Acceptance No. 08-1107.06
Expiration Date MAR 17, 2015
By Ishaq I. Chanda
Miami-Dade Product Control Division

D.L.O. FORMULA
D.L.O. HEIGHT = PANEL HEIGHT – 9 1/16"
D.L.O. WIDTH = PANEL WIDTH – 9 1/16"

TABLE OF CONTENTS

SHEET	DESCRIPTION
1	ELEVATION & GENERAL NOTES
2	ELEVATIONS
3	ANCHORING LAYOUT
4	2 TRACK VERTICAL CROSS SECTIONS
5	3 TRACK VERTICAL CROSS SECTIONS
6	4 TRACK VERTICAL CROSS SECTIONS
7	2 TRACK HORIZONTAL CROSS SECTIONS
8	3 TRACK HORIZONTAL CROSS SECTIONS
9	4 TRACK HORIZONTAL CROSS SECTIONS
10	2, 3 & 4 TRACK HORIZONTAL CROSS SECTIONS
11	GLAZING DETAILS
12	BILL OF MATERIALS
13	COMPONENTS
14	COMPONENTS

REVISIONS

SHEET	REV	DESCRIPTION	DATE	BY
1–14	D	PER DADE LETTER DATED 10/1/09	12/07/09	TJH
1–14	B	PER DADE LETTER DATED 12/7/08	03/13/09	TJH
1	B	General revision and update to current FBC	08/04/08	DRL
1	A	Per Dade County letter dated	12/03/04	DRL

LUIS R. LOMAS P.E.
1/4/10
FLORIDA REGISTRATION NO. 62514

WinDoor INCORPORATED
7500 AMSTERDAM DRIVE
ORLANDO, FL 32832
Phone: 407.481.8400
Fax: 407.481.0505
www.windoorinc.com

Dwg Title:
SERIES 8000 SGD LARGE MISSILE 5'0 X 8'0 PANELS
ELEVATION AND GENERAL NOTES

SIZE	Drn By:	DWG NO.	REV
B	DRL	WIND0081	D

SCALE N.T.S. | DATE: 09/13/04 | SHEET 1 OF 14

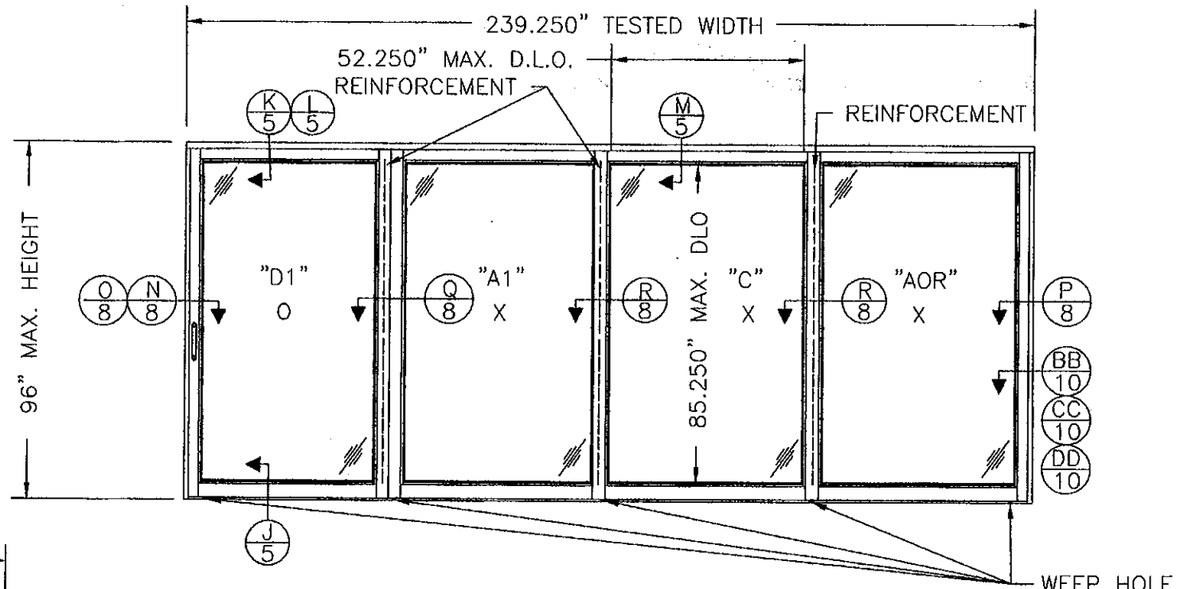

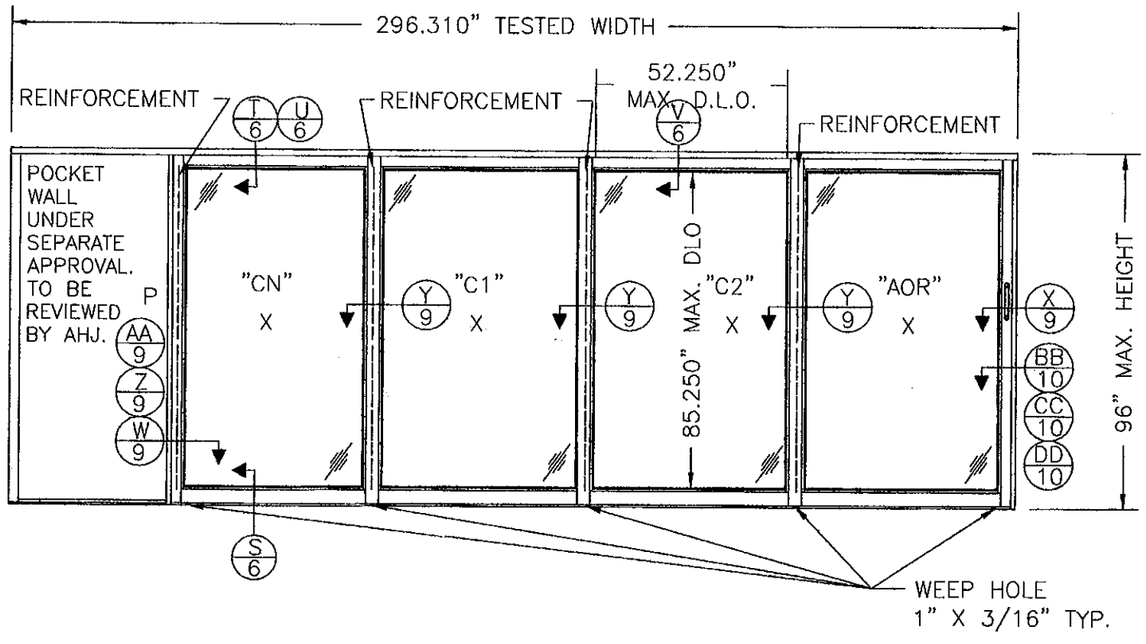

8000 OXXX REINFORCED SLIDING GLASS DOOR 3 TRACK

"D1"	PANEL (FIXED)	=	61 5/16" X 94 5/16
"A1"	PANEL (ACTIVE)	=	61 5/16" X 94 5/16"
"C"	PANEL (ACTIVE)	=	61 5/16" X 94 5/16"
"AOR"	PANEL (ACTIVE)	=	61 5/16" X 94 5/16"

8000 REINFORCED PXXXX SLIDING GLASS DOOR 4 TRACK

"CN"	PANEL (ACTIVE)	=	61 5/16" X 94 5/16
"C1"	PANEL (ACTIVE)	=	61 5/16" X 94 5/16"
"C2"	PANEL (ACTIVE)	=	61 5/16" X 94 5/16"
"AOR"	PANEL (ACTIVE)	=	61 5/16" X 94 5/16"

PRODUCT REVISED
as complying with the Florida Building Code
Acceptance No. 12-0130.06
Expiration Date 3/17/15
By Ishaq I. Chand
Miami Dade Product Control

PRODUCT RENEWED
as complying with the Florida Buiding Code
Acceptance No. 08-1107.06
Expiration Date MAR 17, 2015
By Ishaq I. Chand
Miami Dade Product Control Division

SHEET	REV	DESCRIPTION	DATE	BY
1-14	D	PER DADE LETTER DATED 09/1/09	12/7/09	TJH
1-14	C	PER DADE LETTER DATED 12/7/09	03/13/09	TJH
1	B	General revision and update to current FBC	08/04/08	DRL
1	A	Per Dade County letter dated	12/03/04	DRL

REVISIONS

LUIS R. LOMAS P.E.
1/4/10.
FLORIDA REGISTRATION NO. 62514

WinDoor INCORPORATED
7500 AMSTERDAM DRIVE
ORLANDO, FL 32832
Phone: 407.481.8400
Fax: 407.481.0505
www.windoorinc.com

Dwg Title: SERIES 8000 SGD LARGE MISSILE 5'0 X 8'0 PANELS ELEVATIONS

SIZE	Drn By:	DWG NO.	REV
B	DRL	WIND0081	D

SCALE N.T.S. | DATE: 09/13/04 | SHEET 2 OF 14

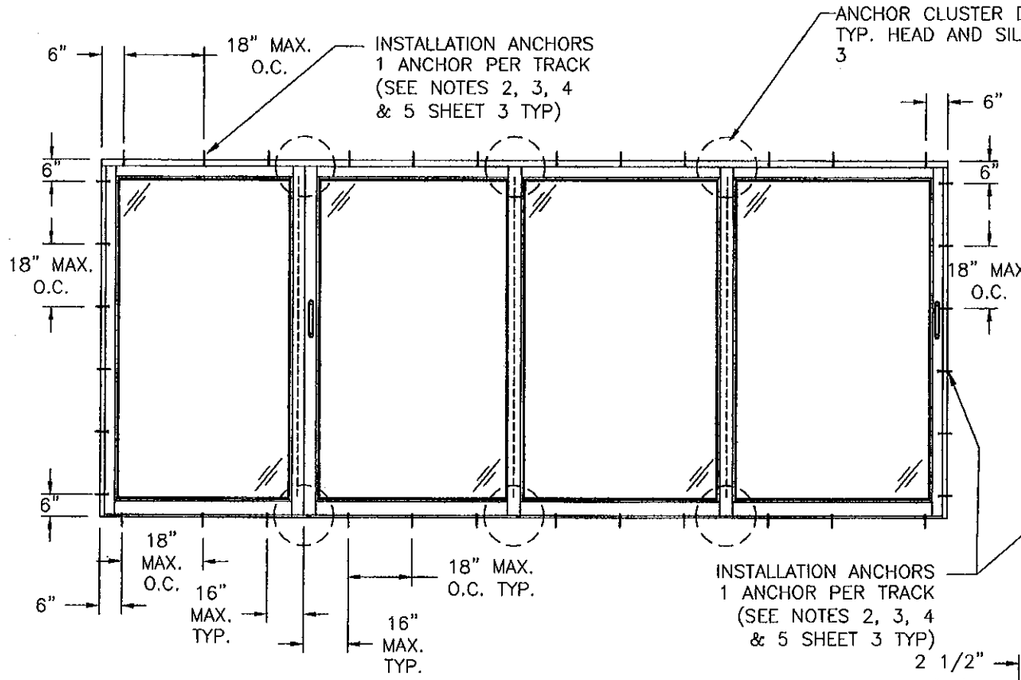

SERIES 8000 OXXX REINFORCED SLIDING GLASS DOOR
SEE NOTES THIS SHEET

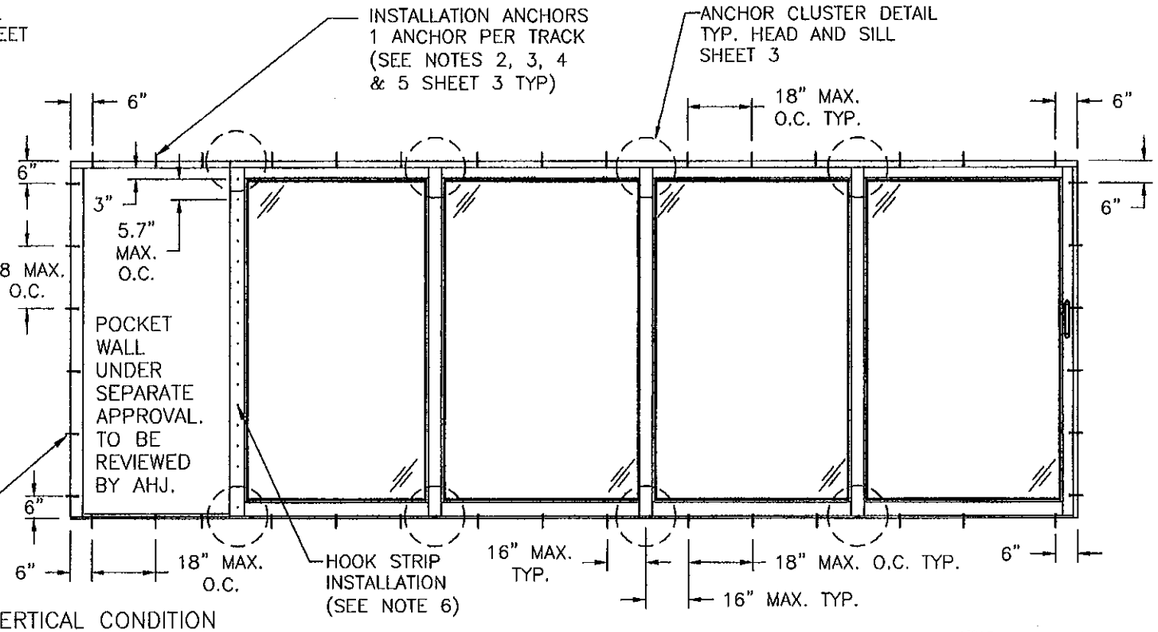

SERIES 8000 PXXXX REINFORCED SLIDING GLASS DOOR
SEE NOTES THIS SHEET

PRODUCT REVISED
as complying with the Florida Building Code
Acceptance No 12-0130.06
Expiration Date 2/17/15
By Ishaq I. Chanda
Miami Dade Product Control

INSTALLATION NOTES:

1) SHIM AS REQ'D. AT EA. SET OF INSTALLATION ANCHORS USING LOAD BEARING SHIMS. MAX. ALLOWABLE SHIM TO BE 1/4". USE SHIMS WHERE SPACE GREATER THAN 1/16" IS PRESENT.
2) ONE ANCHOR PER TRACK ARE REQUIRED (MINIMUM 2 ANCHORS PER LOCATION) EXCEPT CLUSTER
   ON 2 TRACK FRAME TWO (2) ANCHORS ARE REQUIRED AT EACH ANCHOR LOCATION SHOWN.
   ON 3 TRACK FRAME THREE (3) ANCHORS ARE REQUIRED AT EACH ANCHOR LOCATION SHOWN.
   ON 4 TRACK FRAME FOUR (4) ANCHORS ARE REQUIRED AT EACH ANCHOR LOCATION SHOWN.
   POCKET DOOR HOOK STRIPS REQUIRE ONE (1) ANCHOR AT EACH ANCHOR LOCATION SHOWN.
3) SEE NOTE 6.
4) CONCRETE OR MASONRY SUBSTRATE WHERE ONE BY, NON-STRUCTRUAL, WOOD BUCKING (1X TO BE PROPERLY SECURED AND REVIEWED BY BUILDING OFFICIAL) IS EMPLOYED, USE 1/4" DIA. ELCO CRETE-FLEX SS4 TAPCON CONCRETE ANCHORS OF SUFFICIENT LENGTH TO ACHIEVE MIN. OF 1 1/4" INTO CONCRETE OR MASONRY.
5) WOOD FRAME SUBSTRATE, USE #14 GRADE 5 WOOD SCREWS OF SUFFICIENT LENGTH TO ACHIEVE MIN. EMBEDMENT OF 1 1/2" INTO WOOD FRAMING.
6) STEEL STUD FRAMING, USE #14 GRADE 5 WOOD SCREW OF SUFFICIENT LENGTH TO ACHIEVE A MINIMUM OF 1 1/2" INTO THE STEEL FRAMING WITH WOOD BACKING.
   HOOK STRIP ANCHOR SPACING AT 5.7" O.C. MAXIMUM

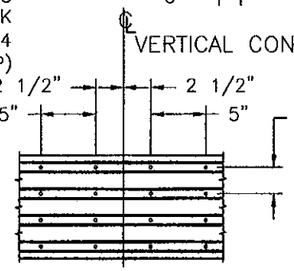

4 TRACK FRAME CLUSTER DETAIL
TYPICAL HEAD AND SILL

ANCHOR CLUSTERS
(MEETING RAILS/INTERLOCKS)

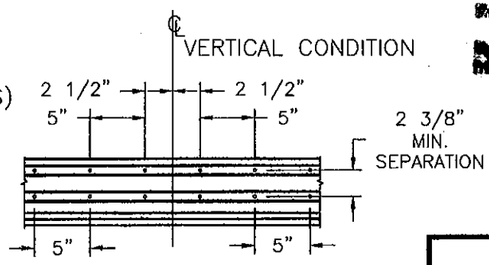

2 TRACK FRAME CLUSTER DETAIL
TYPICAL HEAD AND SILL

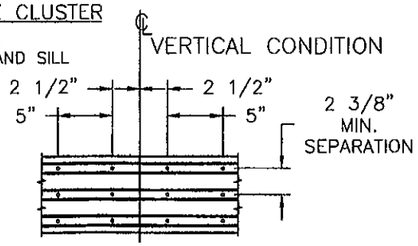

3 TRACK FRAME CLUSTER DETAIL
TYPICAL HEAD AND SILL

PRODUCT RENEWED
as complying with the Florida Building Code
Acceptance No 08-1107.06
Expiration Date MAR 17 2015
By Ishaq I. Chanda
Miami Dade Product Control Division

SHEET	REV	DESCRIPTION	DATE	BY
1-14	D	PER DADE LETTER DATED 09/1/09	12/7/09	TJH
1-14	C	PER DADE LETTER DATED 12/7/08	03/13/09	TJH
1	B	General revision and update to current FBC	08/04/08	DRL
1	A	Per Dade County letter dated	12/03/04	DRL

REVISIONS

LUIS R. LOMAS P.E.
1/4/10
FLORIDA REGISTRATION NO. 62514

WinDoor INCORPORATED
7500 AMSTERDAM DRIVE
ORLANDO, FL 32832
Phone: 407.481.8400
Fax: 407.481.0505
www.windoorinc.com

Dwg Title:
SERIES 8000 SGD LARGE MISSILE 5'0 X 8'0 PANELS
ANCHORING DETAILS

SIZE	Drn By:	DWG NO.	REV
B	DRL	WIND0081	D

SCALE	DATE:	SHEET
N.T.S.	09/13/04	3 OF 14

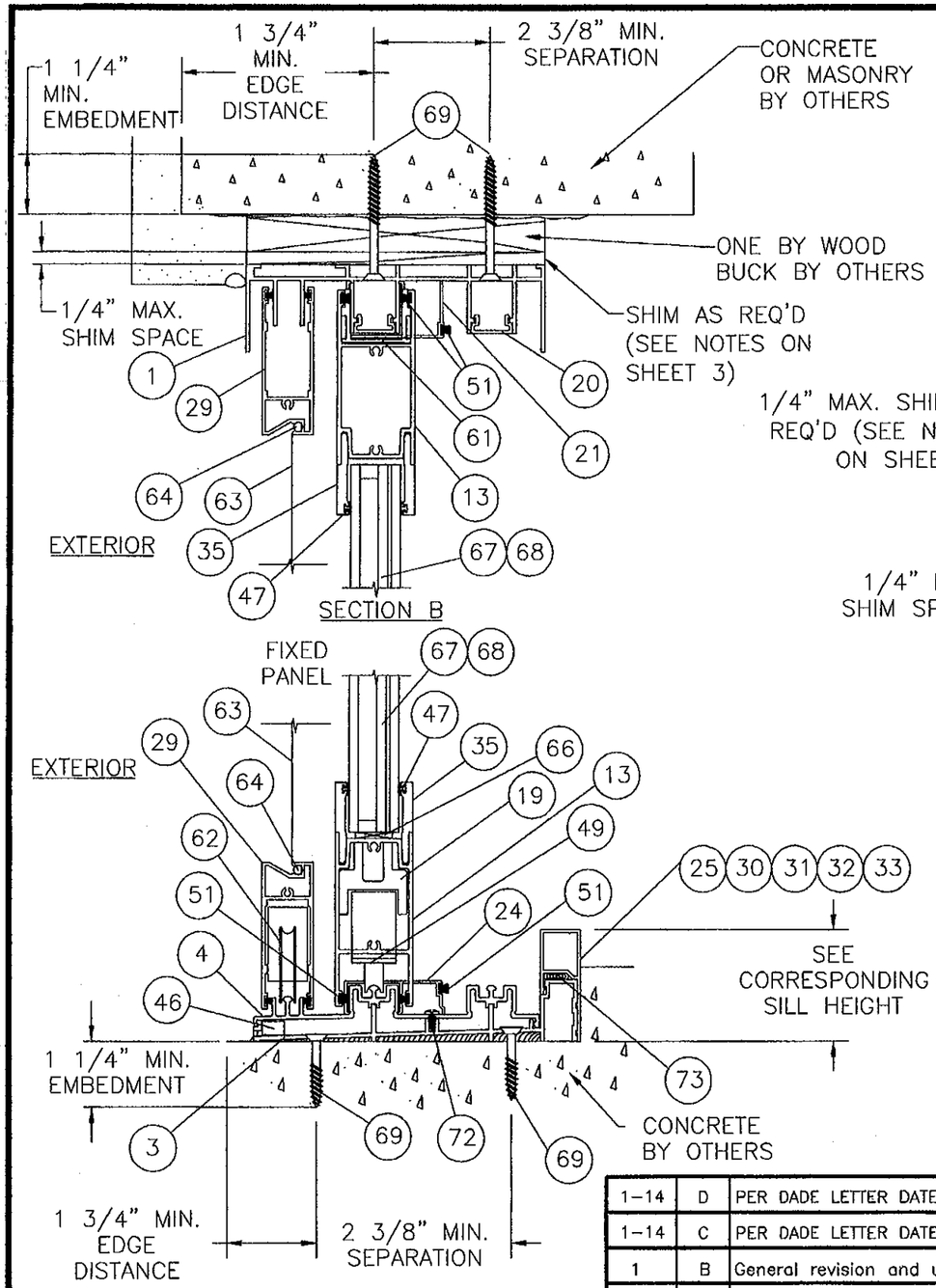

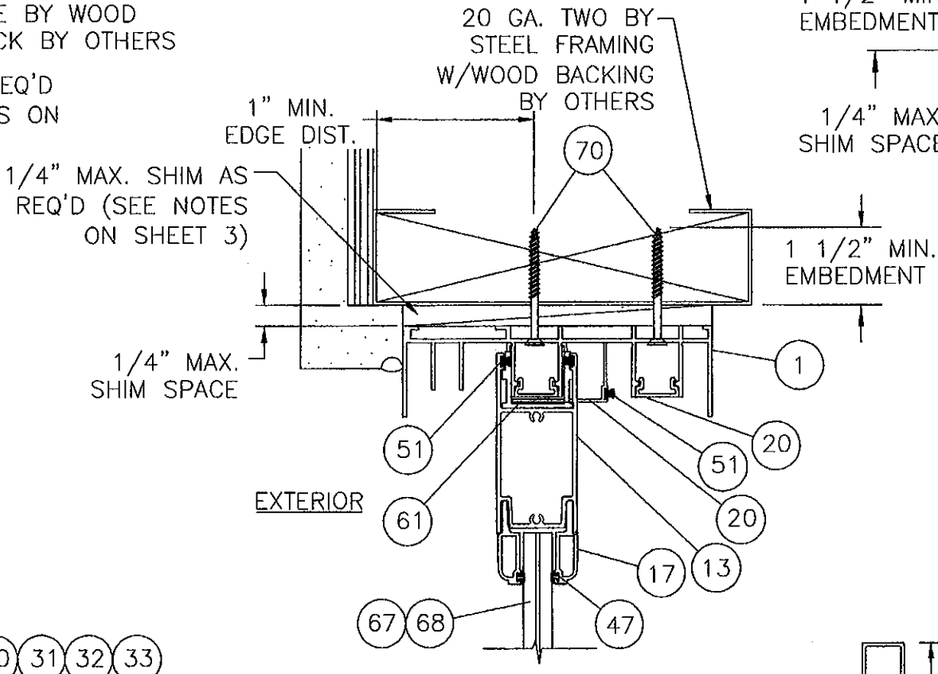

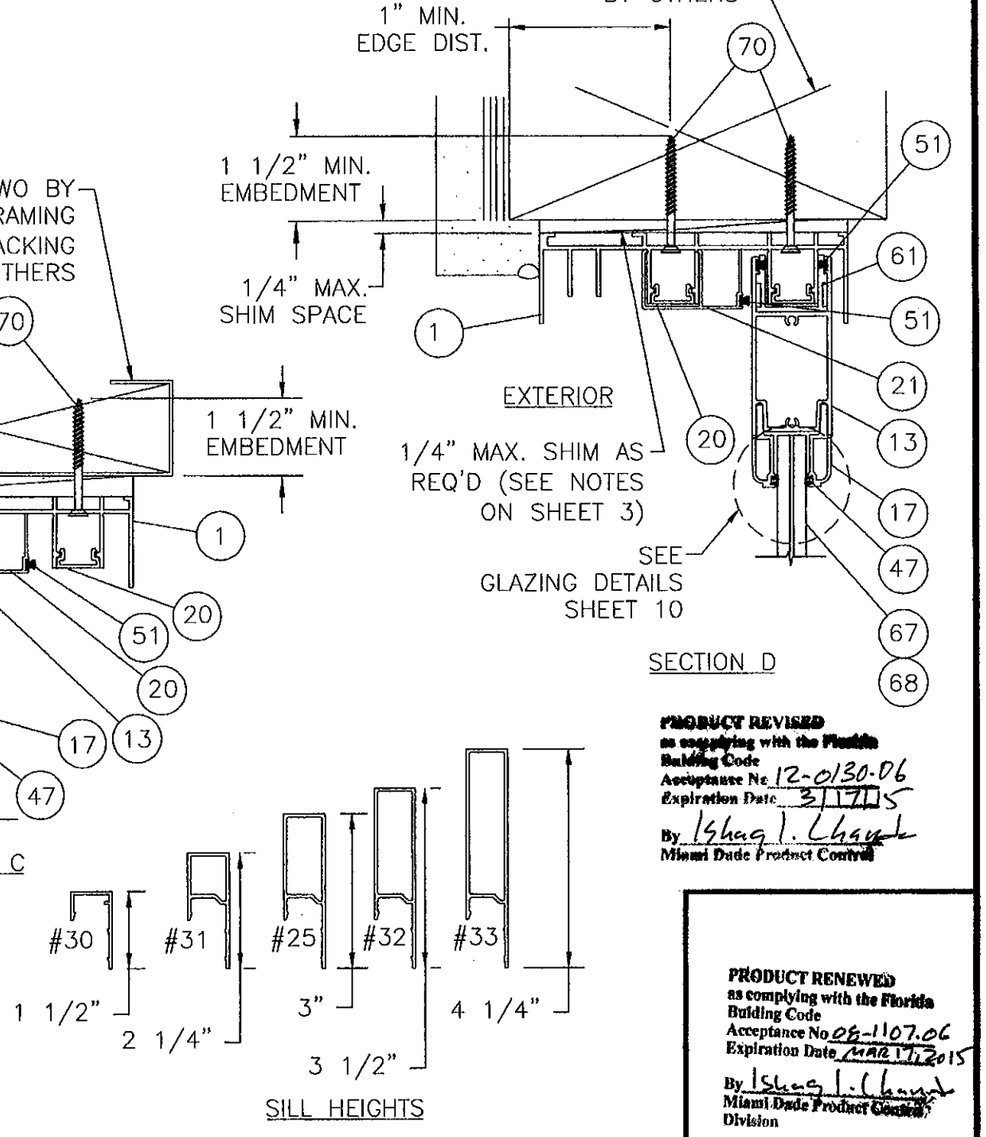

PRODUCT REVISED
as complying with the Florida Building Code
Acceptance No. 12-0130.06
Expiration Date 3/17/15
By Ishaq I. Chanda
Miami Dade Product Control

PRODUCT RENEWED
as complying with the Florida Building Code
Acceptance No. 08-1107.06
Expiration Date MARCH 17, 2015
By Ishaq I. Chanda
Miami Dade Product Control Division

SHEET	REV	DESCRIPTION	DATE	BY
1-14	D	PER DADE LETTER DATED 9/1/09	12/7/09	TJH
1-14	C	PER DADE LETTER DATED 12/7/08	03/13/09	TJH
1	B	General revision and update to current FBC	08/04/08	DRL
1	A	Per Dade County letter dated	12/03/04	DRL

REVISIONS

LUIS R. LOMAS P.E.
1/4/10
FLORIDA REGISTRATION NO. 62514

WinDoor INCORPORATED
7500 AMSTERDAM DRIVE
ORLANDO, FL 32832
Phone: 407.481.8400
Fax: 407.481.0505
www.windoorinc.com

Dwg Title:
SERIES 8000 SGD LARGE MISSILE 5'0 X 8'0 PANELS
2 TRACK VERTICAL CROSS SECTIONS

SIZE	Drn By:	DWG NO.	REV
B	DRL	WIND0081	D

SCALE	DATE:	SHEET
N.T.S.	09/13/04	4 OF 14

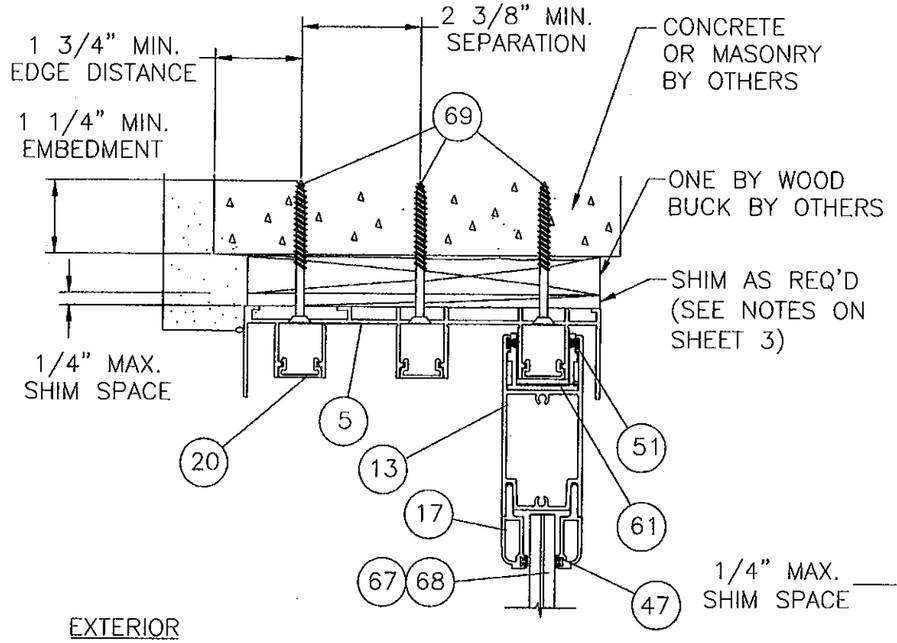

SECTION K

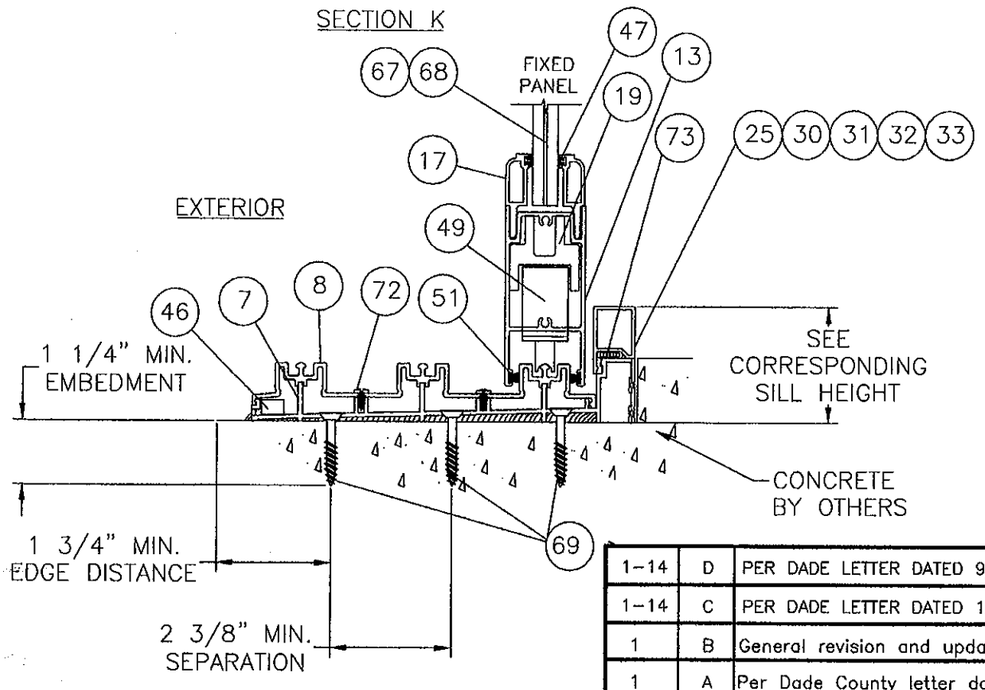

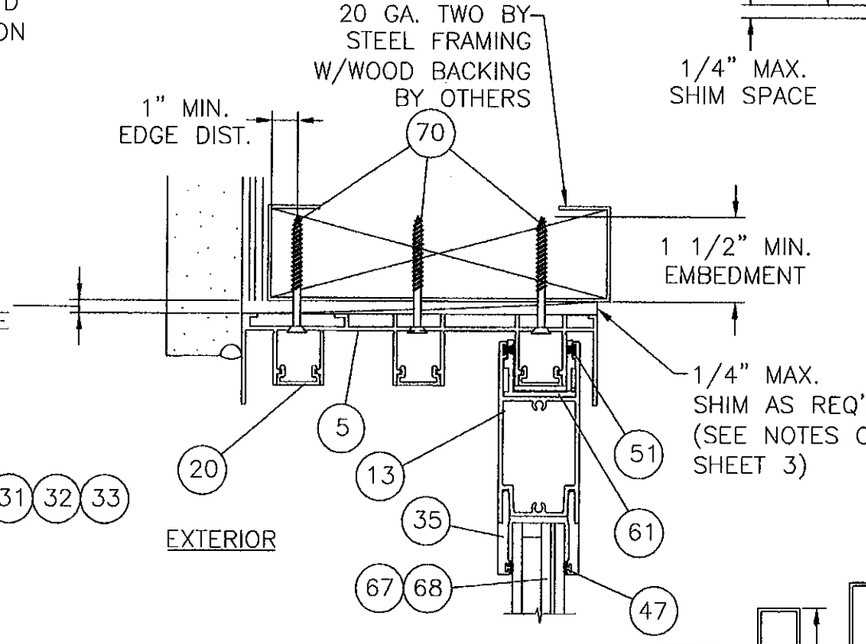

SECTION L

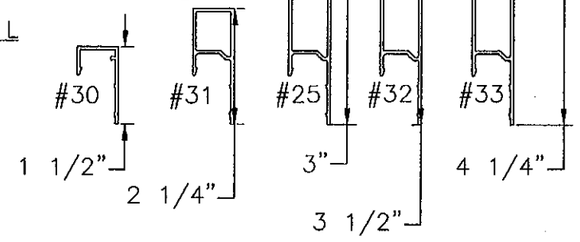

SILL HEIGHTS

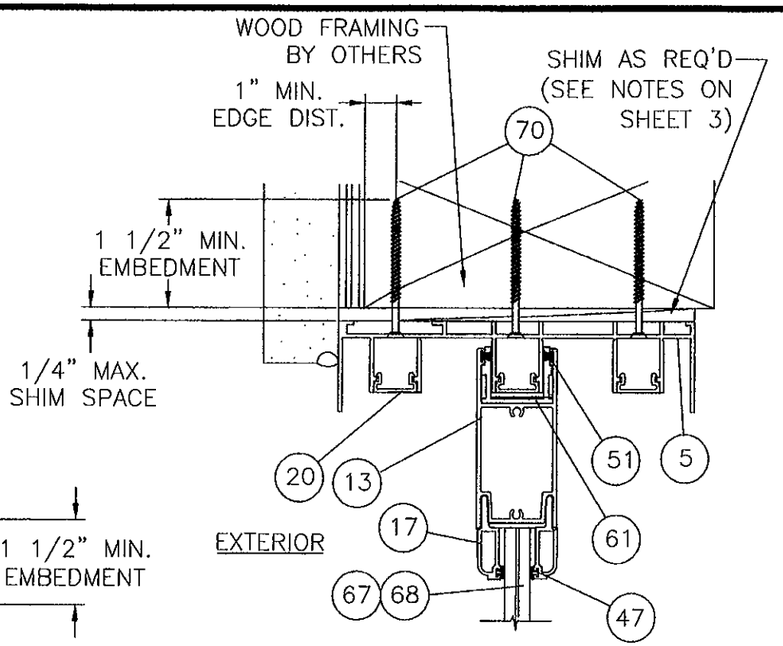

SECTION M

PRODUCT REVIEWED as complying with the Florida Building Code
Acceptance No. 12-0130.06
Expiration Date 3/17/15
By Ishaq I. Chanda
Miami Dade/Product Control

PRODUCT RENEWED as complying with the Florida Building Code
Acceptance No. 06-1107.06
Expiration Date MAR 17 2015
By Ishaq I. Chanda
Miami Dade Product Control Division

SHEET	REV	DESCRIPTION	DATE	BY
1-14	D	PER DADE LETTER DATED 9/1/09	12/7/09	TJH
1-14	C	PER DADE LETTER DATED 12/7/08	03/13/09	TJH
1	B	General revision and update to current FBC	08/04/08	DRL
1	A	Per Dade County letter dated	12/03/04	DRL

REVISIONS

LUIS R. LOMAS P.E.
1/4/10
FLORIDA REGISTRATION NO. 62514

WinDoor INCORPORATED
7500 AMSTERDAM DRIVE
ORLANDO, FL 32832
Phone: 407.481.8400
Fax: 407.481.0505
www.windoorinc.com

Dwg Title:
SERIES 8000 SGD LARGE MISSILE 5'0 X 8'0 PANELS
3 TRACK VERTICAL CROSS SECTIONS

SIZE	Drn By:	DWG NO.	REV
B	DRL	WIND0081	D

SCALE	DATE:	SHEET
N.T.S.	09/13/04	5 OF 14

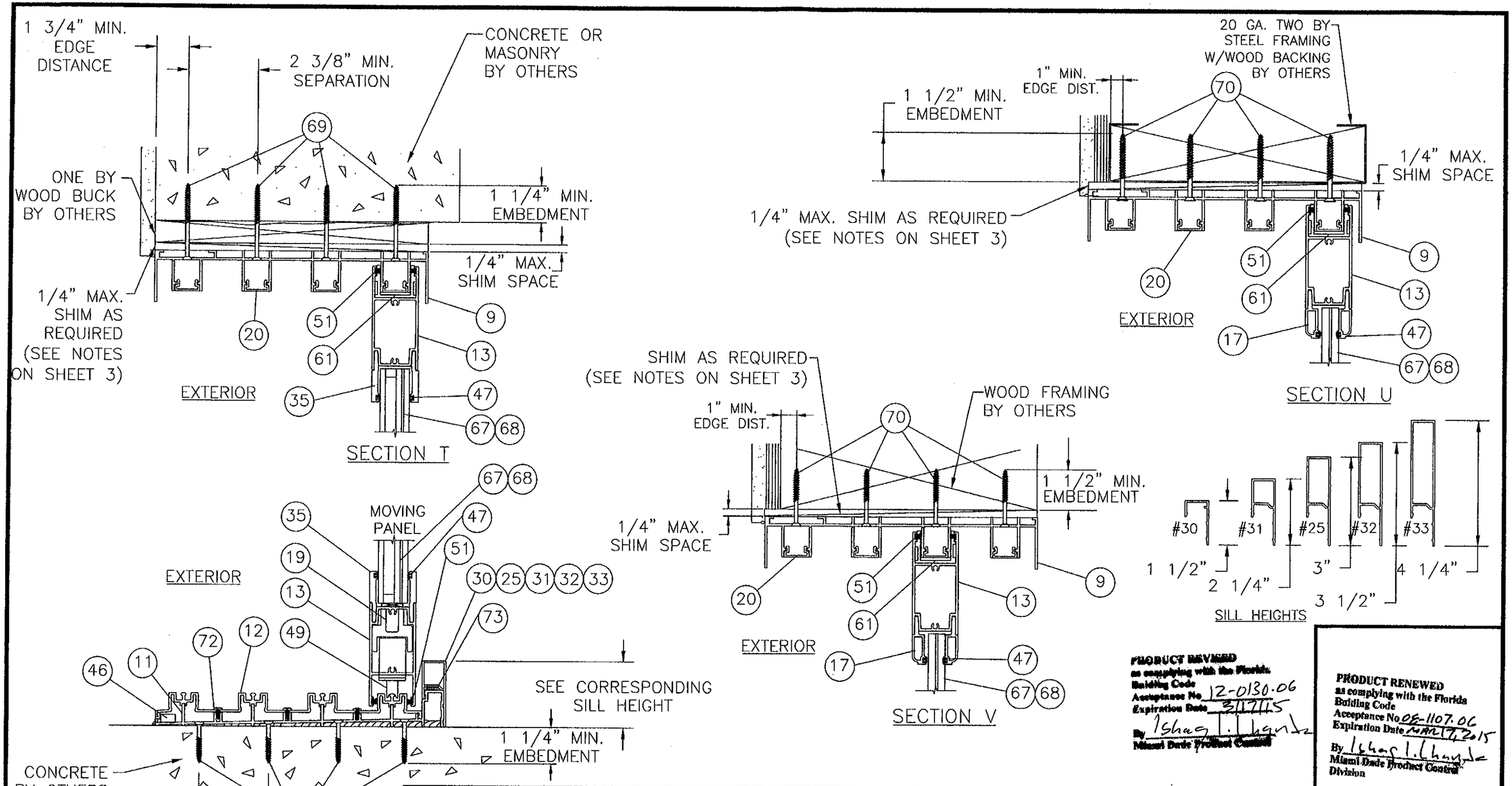

PRODUCT REVISED
as complying with the Florida Building Code
Acceptance No 12-0130.06
Expiration Date 3/17/15
By Ishag I. Chanda
Miami Dade Product Control

PRODUCT RENEWED
as complying with the Florida Building Code
Acceptance No 08-1107.06
Expiration Date MAR 17, 2015
By Ishag I. Chanda
Miami Dade Product Control Division

SHEET	REV	DESCRIPTION	DATE	BY
1-14	D	PER DADE LETTER DATED 9/1/09	12/7/09	TJH
1-14	C	PER DADE LETTER DATED 12/7/08	03/13/09	TJH
1	B	General revision and update to current FBC	08/04/08	DRL
1	A	Per Dade County letter dated	12/03/04	DRL

REVISIONS

LUIS R. LOMAS P.E.
Luis R. Lomas
1/4/10
FLORIDA REGISTRATION NO. 62514

WinDoor INCORPORATED
7500 AMSTERDAM DRIVE
ORLANDO, FL 32832
Phone: 407.481.8400
Fax: 407.481.0505
www.windoorinc.com

Dwg Title:
SERIES 8000 SGD LARGE MISSILE 5'0" X 8'0 PANELS
4 TRACK VERTICAL CROSS SECTIONS

SIZE	Drn By:	DWG NO.	REV
B	DRL	WIND0081	D

SCALE N.T.S. | DATE: 09/13/04 | SHEET 6 OF 14

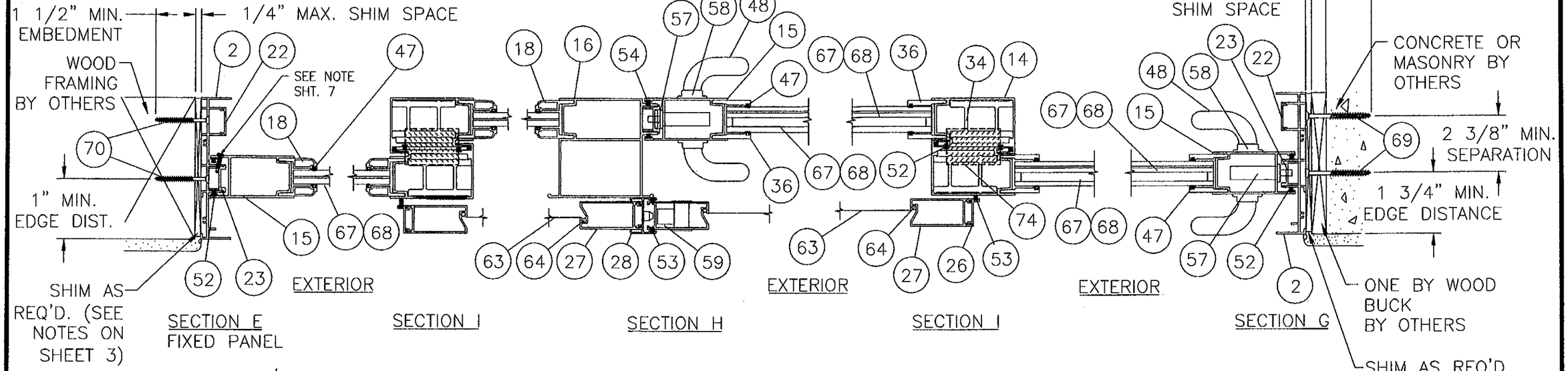

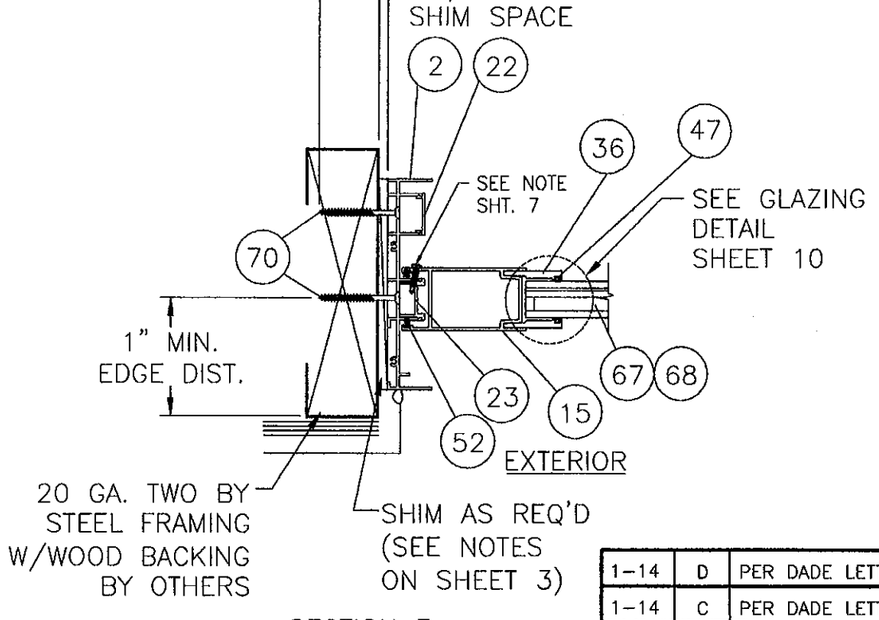

SECTION F
FIXED PANEL

REINFORCED DOORS

PANEL CONSTRUCTION
EACH PANEL HAS COPED & BUTTED CORNERS. EACH CORNER IS FASTENED TOGETHER WITH TWO #10 X 1 1/4 SS PAN HEAD SCREWS.

NOTE: (FIXED PANEL TO JAMB)
SECTION E AND F, SHEET 7, AND SECTION O SHEET 8, FIXED PANEL USES #8 x 3/4" SELF TAPPING TEK SCREW TO SECURE FIXED PANEL IN PLACE. (4) SCREWS ARE REQUIRED, 6" FROM TOP AND BOTTOM OF PANEL AND (2) MORE EQUALLY SPACED. SECTION N, SHEET 8 USES ITEMS #21, HEAD COVER, AND ITEM #24, SILL COVER, TO SECURE FIXED PANEL IN PLACE.

PRODUCT REVISED
as complying with the Florida Building Code
Acceptance No 12-0130.06
Expiration Date 3.17.15
By Ishaq I. Lhanti
Miami Dade Product Control

PRODUCT RENEWED
as complying with the Florida Building Code
Acceptance No 08-1107.06
Expiration Date MAR 17, 2015
By Ishaq I. Lhanti
Miami Dade Product Control Division

SHEET	REV	DESCRIPTION	DATE	BY
1-14	D	PER DADE LETTER DATED 9/7/09	12/7/09	TJH
1-14	C	PER DADE LETTER DATED 12/7/08	03/13/09	TJH
1	B	General revision and update to current FBC	08/04/08	DRL
1	A	Per Dade County letter dated	12/03/04	DRL

REVISIONS

LUIS R. LOMAS P.E.
1/4/10
FLORIDA REGISTRATION NO. 62514

WinDoor INCORPORATED
7500 AMSTERDAM DRIVE
ORLANDO, FL 32832
Phone: 407.481.8400
Fax: 407.481.0505
www.windoorinc.com

Dwg Title:
SERIES 8000 SGD LARGE MISSILE 5'0 X 8'0 PANELS
2 TRACK HORIZONTAL CROSS SECTIONS

SIZE	Drn By:	DWG NO.	REV
B	DRL	WIND0081	D

SCALE N.T.S. | DATE: 09/13/04 | SHEET 7 OF 14

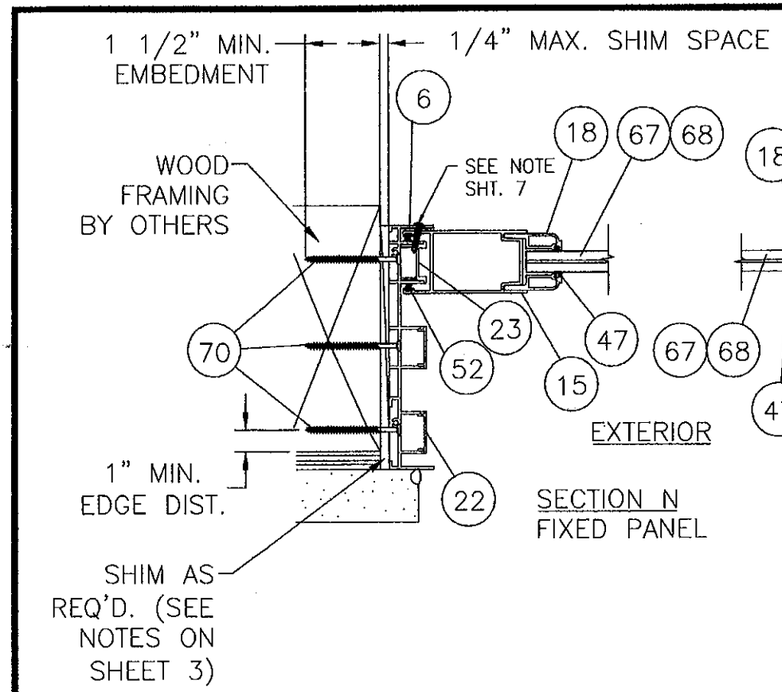

SECTION N
FIXED PANEL

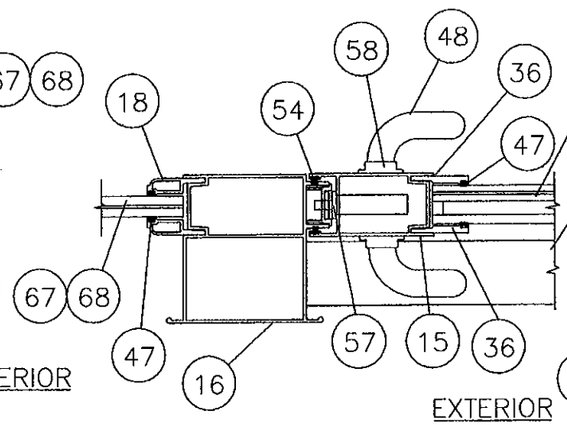

SECTION Q

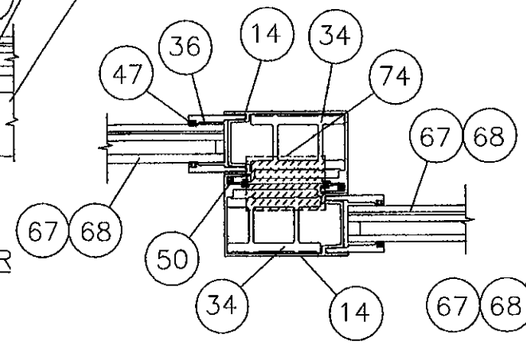

SECTION R

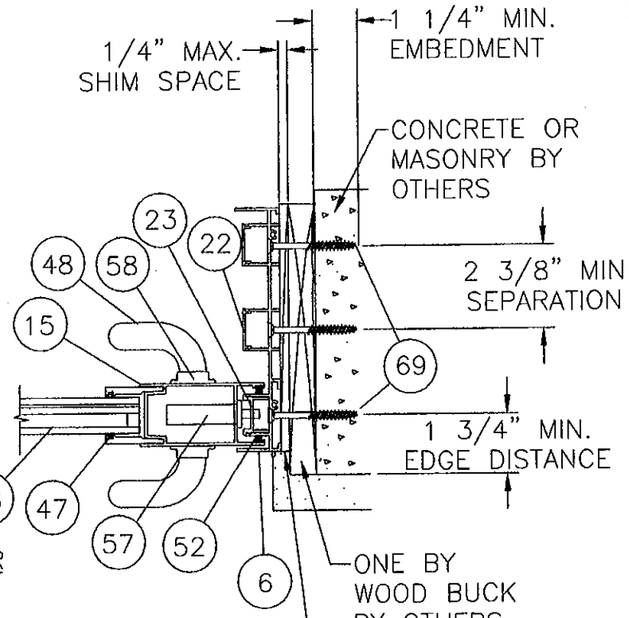

SECTION P

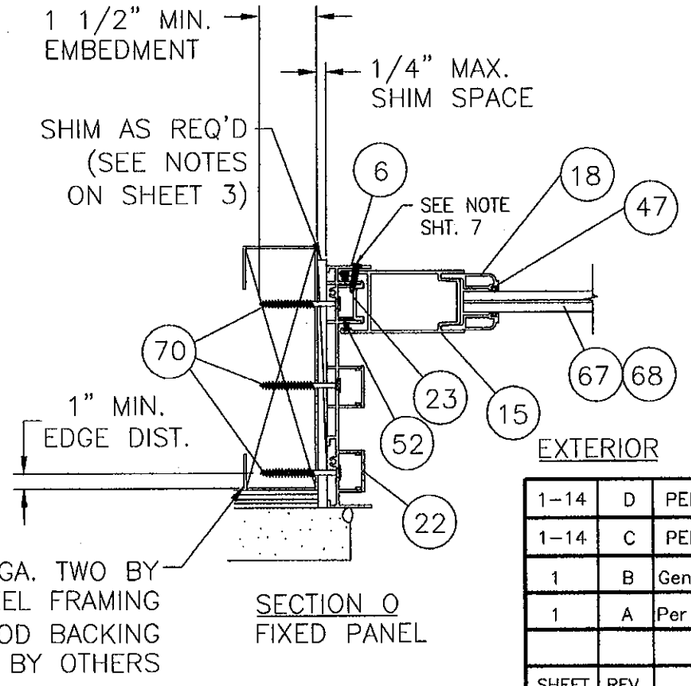

SECTION O
FIXED PANEL

PANEL CONSTRUCTION

EACH PANEL HAS COPED & BUTTED CORNERS.
EACH CORNER IS FASTENED TOGETHER WITH
TWO #10 X 1 1/4 SS PAN HEAD SCREWS.

PRODUCT REVISED as complying with the Florida Building Code
Acceptance No. 12-0130.06
Expiration Date 3/17/15
By Ishaq I. Chand
Miami Dade Product Control

PRODUCT RENEWED as complying with the Florida Building Code
Acceptance No. 08-1107.06
Expiration Date MAR. 17, 2015
By Ishaq I. Chand
Miami Dade Product Control Division

SHEET	REV	DESCRIPTION	DATE	BY
1-14	D	PER DADE LETTER DATED 9/1/09	12/7/09	TJH
1-14	C	PER DADE LETTER DATED 12/7/08	03/13/09	TJH
1	B	General revision and update to current FBC	08/04/08	DRL
1	A	Per Dade County letter dated	12/03/04	DRL

REVISIONS

LUIS R. LOMAS P.E.
FLORIDA REGISTRATION NO. 62514
1/4/10

WinDoor INCORPORATED
7500 AMSTERDAM DRIVE
ORLANDO, FL 32832
Phone: 407.481.8400
Fax: 407.481.0505
www.windoorinc.com

Dwg Title:
SERIES 8000 SGD LARGE MISSILE 5'0 X 8'0 PANELS
3 TRACK HORIZONTAL CROSS SECTIONS

SIZE	Drn By:	DWG NO.	REV
B	DRL	WIND0081	D

SCALE N.T.S. | DATE: 09/13/04 | SHEET 8 OF 14

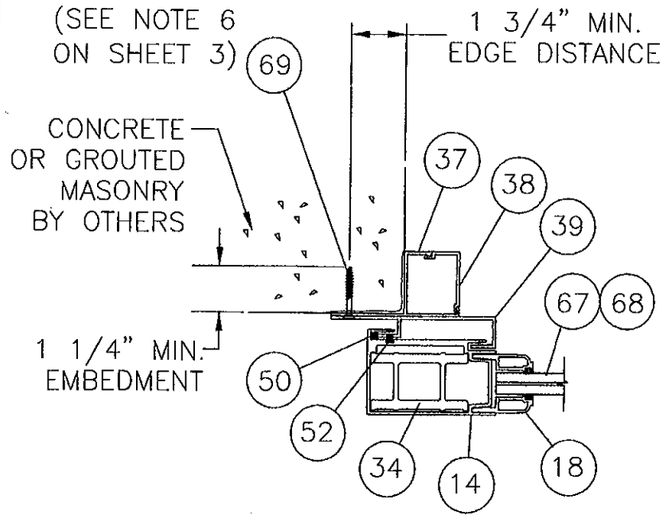

SECTION W

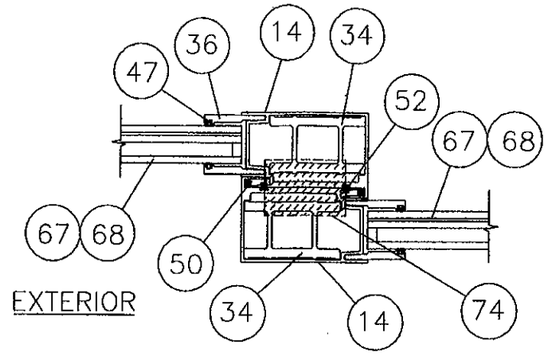

SECTION Y

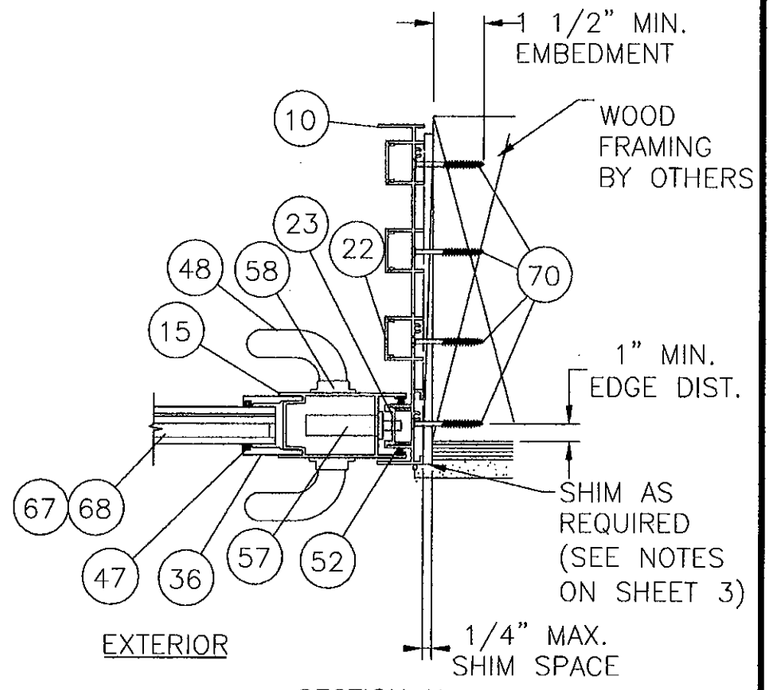

SECTION X

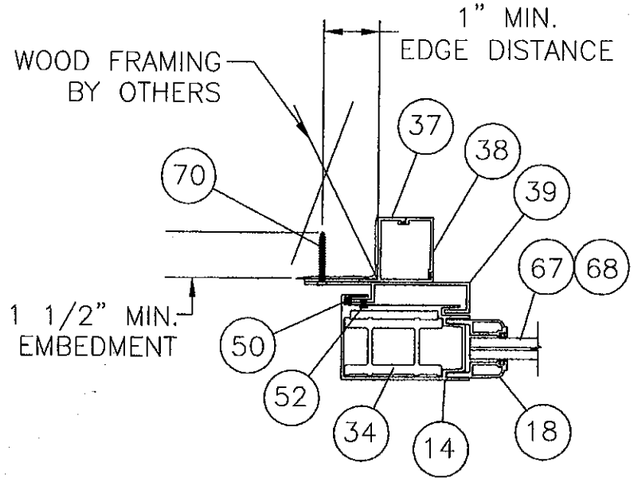

SECTION Z

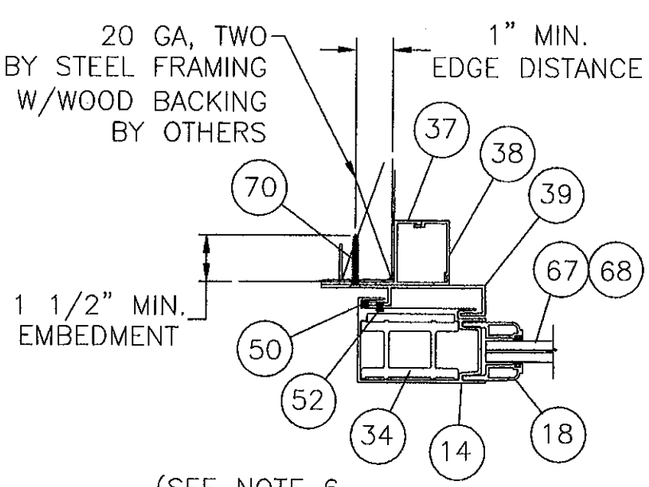

(SEE NOTE 6 ON SHEET 3)

SECTION AA

PANEL CONSTRUCTION

EACH PANEL HAS COPED & BUTTED CORNERS. EACH CORNER IS FASTENED TOGETHER WITH TWO #10 X 1 1/4 SS PAN HEAD SCREWS.

PRODUCT REVIEWED as complying with the Florida Building Code
Acceptance No. 12-0130.06
Expiration Date 3/17/15
By Ishaq I. Chanda
Miami Dade Product Control

PRODUCT RENEWED as complying with the Florida Building Code
Acceptance No. 08-1107.06
Expiration Date MAR 17, 2015
By Ishaq I. Chanda
Miami Dade Product Control Division

SHEET	REV	DESCRIPTION	DATE	BY
1-14	D	PER DADE LETTER DATED 9/1/09	12/7/09	TJH
1-14	C	PER DADE LETTER DATED 12/7/08	03/13/09	TJH
1	B	General revision and update to current FBC	08/04/08	DRL
1	A	Per Dade County letter dated	12/03/04	DRL

REVISIONS

LUIS R. LOMAS P.E.
1/4/10
FLORIDA REGISTRATION NO. 62514

WinDoor INCORPORATED
7500 AMSTERDAM DRIVE
ORLANDO, FL 32832
Phone: 407.481.8400
Fax: 407.481.0505
www.windoorinc.com

Dwg Title:
SERIES 8000 SGD LARGE MISSILE 5'0 X 8'0 PANELS
4 TRACK HORIZONTAL CROSS SECTIONS

SIZE	Drn By:	DWG NO.	REV
B	DRL	WIND0081	D

SCALE N.T.S. | DATE: 09/13/04 | SHEET 9 OF 14

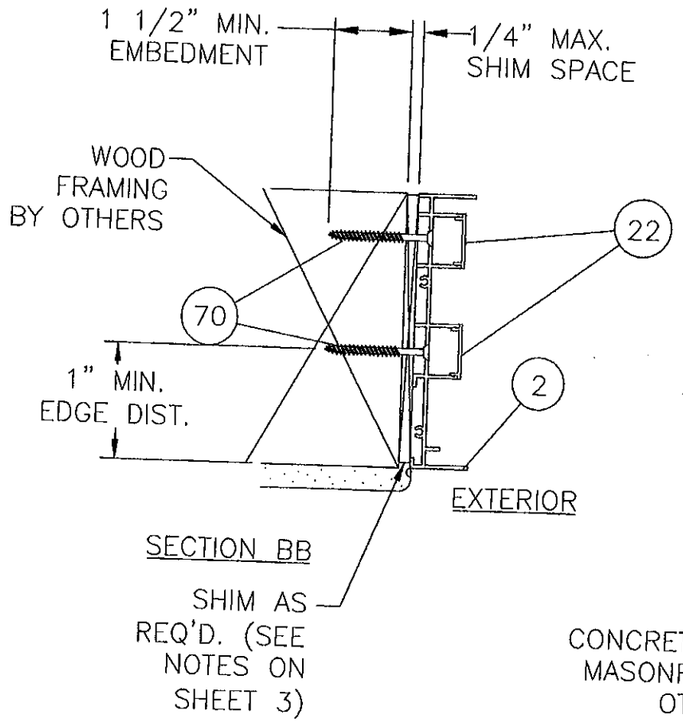

SECTION BB

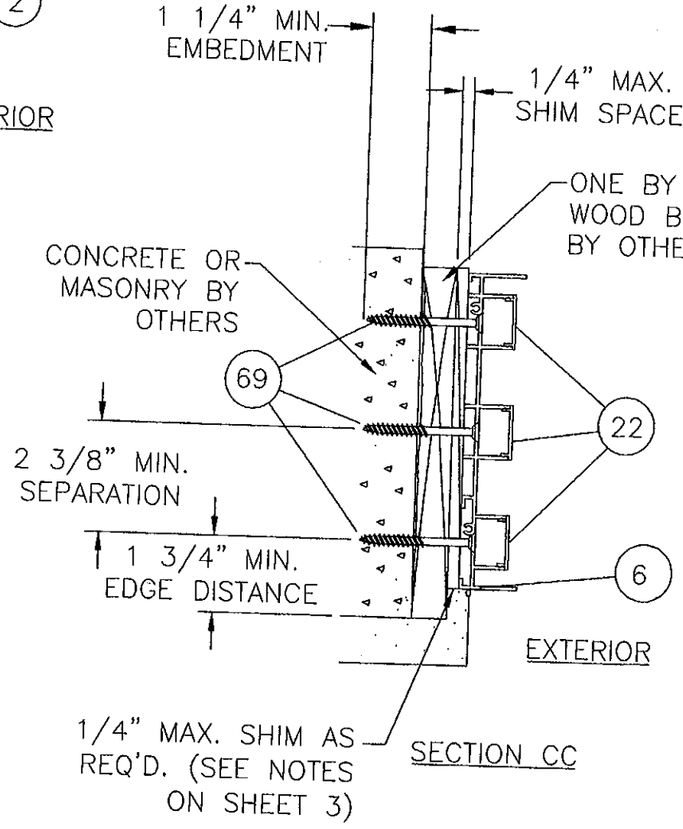

SECTION CC

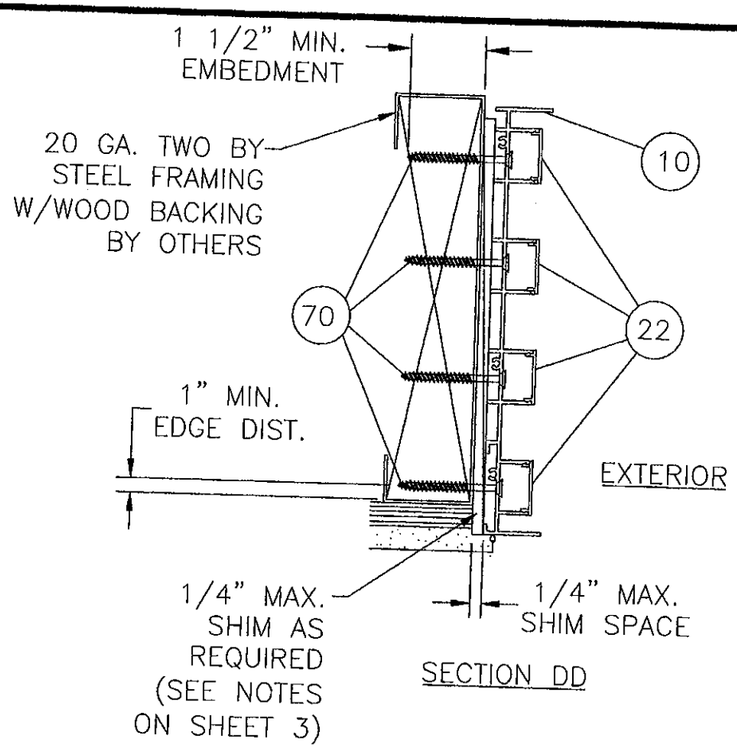

SECTION DD

FRAME ASSEMBLY

EACH FRAME HAS NOTCHED AND BUTTED CORNERS.
EACH CORNER IS FASTENED TOGETHER AS FOLLOWS:
TWO #10 X 1 1/4 SS PAN HEAD SCREWS ON THE 2 AND 3 TRACK.
THREE #10 X 1 1/4 SS PAN HEAD SCREWS ON THE 4 TRACK.

PRODUCT REVIEWED as complying with the Florida Building Code
Acceptance No. 12-0130.06
Expiration Date 3.17.15
By Ishaq I. Chanda
Miami Dade Product Control

PRODUCT RENEWED as complying with the Florida Building Code
Acceptance No. 08-1107.06
Expiration Date MAR 17 2015
By Ishaq I. Chanda
Miami Dade Product Control Division

SHEET	REV	DESCRIPTION	DATE	BY
1-14	D	PER DADE LETTER DATED 9/1/09	12/7/09	TJH
1-14	C	PER DADE LETTER DATED 12/7/08	03/13/09	TJH
1	B	General revision and update to current FBC	08/04/08	DRL
1	A	Per Dade County letter dated	12/03/04	DRL

REVISIONS

LUIS R. LOMAS P.E.
Luis R. Lomas
1/4/10
FLORIDA REGISTRATION NO. 62514

WinDoor INCORPORATED
7500 AMSTERDAM DRIVE
ORLANDO, FL 32832
Phone: 407.481.8400
Fax: 407.481.0505
www.windoorinc.com

Dwg Title:
SERIES 8000 SGD LARGE MISSILE 5'0 X 8'0 PANELS
2, 3 & 4 TRACK HORIZONTAL CROSS SECTIONS

SIZE	Drn By:	DWG NO.	REV
B	DRL	WIND0081	D

SCALE N.T.S. | DATE: 09/13/04 | SHEET 10 OF 14

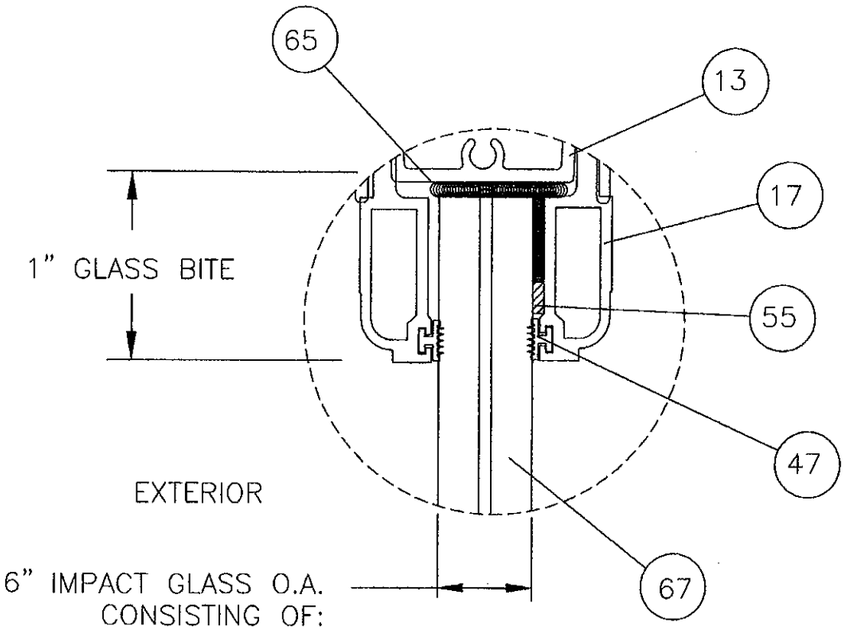

9/16" IMPACT GLASS O.A.
CONSISTING OF:
1/4" HEAT STRENGTHENED +
0.075 VANCEVA BY SOLUTIA +
1/4" HEAT STRENGTHENED

GLAZING TYPE A

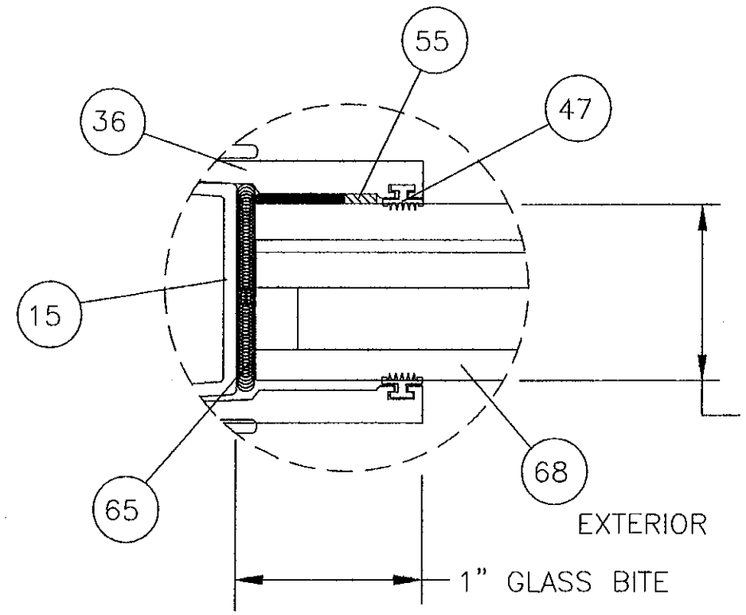

1" INSULATING GLASS O.A.
CONSISTING OF:
3/16" HEAT STRENGTHENED+
0.075 VANCEVA BY SOLUTIA+
3/16" HEAT STRENGTHENED
(INSIDE LITE)+
3/8" AIR SPACE+
3/16" TEMPERED
(OUTSIDE LITE)

GLAZING TYPE B

PRODUCT REVISED
as complying with the Florida
Building Code
Acceptance No 12-0130.06
Expiration Date 3/17/15
By Ishaq I. Lhamade
Miami Dade Product Control

PRODUCT RENEWED
as complying with the Florida
Building Code
Acceptance No 06-1107.06
Expiration Date MAR 17 2015
By Ishaq I. Lhamade
Miami Dade Product Control
Division

SHEET	REV	DESCRIPTION	DATE	BY
1-14	D	PER DADE LETTER DATED 9/1/09	12/7/09	TJH
1-14	C	PER DADE LETTER DATED 12/7/08	03/13/09	TJH
1	B	General revision and update to current FBC	08/04/08	DRL
1	A	Per Dade County letter dated	12/03/04	DRL

REVISIONS

LUIS R. LOMAS P.E.
Luis R. Lomas
1/4/10
FLORIDA REGISTRATION
NO. 62514

WinDoor
INCORPORATED
7500 AMSTERDAM DRIVE
ORLANDO, FL 32832
Phone: 407.481.8400
Fax: 407.481.0505
www.windoorinc.com

Dwg Title:
SERIES 8000 SGD LARGE MISSILE 5'0 X 8'0 PANELS
GLAZING DETAILS

SIZE	Drn By:	DWG NO.	REV
B	DRL	WIND0081	D

SCALE N.T.S. | DATE: 09/13/04 | SHEET 11 OF 14

BILL OF MATERIALS

NO.	PART NO.	DESCRIPTION	MATERIAL	MFG
1	FS-01846	2 TRACK FRAME HEAD WS/NS	EXTRUDED ALUM. A6063-T6	KEYMARK
2	FS-01845	2 TRACK FRAME JAMB WS/NS	EXTRUDED ALUM. A6063-T6	KEYMARK
3	FS-01884	2 TRACK SILL PAN WS/NS	EXTRUDED ALUM. A6063-T6	KEYMARK
4	FS-01885	2 TRACK INSERT WS	EXTRUDED ALUM. A6063-T6	KEYMARK
5	FS-02180	3 TRACK FRAME HEAD	EXTRUDED ALUM. A6063-T6	KEYMARK
6	FS-02181	3 TRACK FRAME JAMB	EXTRUDED ALUM. A6063-T6	KEYMARK
7	FS-02182	3 TRACK SILL PAN	EXTRUDED ALUM. A6063-T6	KEYMARK
8	FS-02183	3 TRACK INSERT	EXTRUDED ALUM. A6063-T6	KEYMARK
9	FS-02071	4 TRACK FRAME HEAD	EXTRUDED ALUM. A6063-T6	KEYMARK
10	FS-02070	4 TRACK FRAME JAMB	EXTRUDED ALUM. A6063-T6	KEYMARK
11	FS-02069	4 TRACK SILL PAN	EXTRUDED ALUM. A6063-T6	KEYMARK
12	FS-02184	4 TRACK INSERT	EXTRUDED ALUM. A6063-T6	KEYMARK
13	FH-01869	TOP RAIL/BOTTOM RAIL	EXTRUDED ALUM. A6063-T6	KEYMARK
14	FH-02491	INTERLOCK	EXTRUDED ALUM. A6063-T6	KEYMARK
15	FH-01871	LOCK STILE/PLAIN STILE	EXTRUDED ALUM. A6063-T6	KEYMARK
16	FH-02165	FEMALE BUTT STILE	EXTRUDED ALUM. A6063-T6	KEYMARK
17	FH-01877	9/16" HORIZONTAL GLASS STOPS	EXTRUDED ALUM. A6063-T6	KEYMARK
18	FH-01878	9/16" VERTICAL GLASS STOPS	EXTRUDED ALUM. A6063-T6	KEYMARK
19	FS-02644	ROLLER BACK UP	EXTRUDED ALUM. A6063-T6	KEYMARK
20	FS-01882	FRAME HEAD INSERT	EXTRUDED ALUM. A6063-T6	KEYMARK
21	FS-02210	FRAME HEAD COVER	EXTRUDED ALUM. A6063-T6	KEYMARK
22	FS-01883	FRAME JAMB INSERT	EXTRUDED ALUM. A6063-T6	KEYMARK
23	FS-02726	FRAME STILE JAMB INSERT	EXTRUDED ALUM. A6063-T6	KEYMARK
24	FS-02208	SILL COVER	EXTRUDED ALUM. A6063-T6	KEYMARK
25	FH-02813	3" SILL RISER ADD ON	EXTRUDED ALUM. A6063-T6	KEYMARK
26	FS-02209	SCREEN INTERLOCK ADAPTER SWEEP	EXTRUDED ALUM. A6063-T6	KEYMARK
27	FH-02395	SCREEN STILE	EXTRUDED ALUM. A6063-T6	KEYMARK
28	FS-02650	SCREEN ASTRAGAL	EXTRUDED ALUM. A6063-T6	KEYMARK
29	FH-02300	SCREEN TOP RAIL/BOTTOM RAIL	EXTRUDED ALUM. A6063-T6	KEYMARK
30	FS-02629	1 1/2" SILL RISER	EXTRUDED ALUM. A6063-T6	KEYMARK
31	FH-02625	2 1/4" SILL RISER	EXTRUDED ALUM. A6063-T6	KEYMARK
32	FH-02626	3 1/2" SILL RISER	EXTRUDED ALUM. A6063-T6	KEYMARK
33	FH-02939	4 1/4" SILL RISER	EXTRUDED ALUM. A6063-T6	KEYMARK
34	FH-02641	ALUM. REINFORCEMENT BAR FULL LENGTH	EXTRUDED ALUM. ~~A6063-T6~~ A16061-T6	KEYMARK
35	FH-01879	1" HORIZONTAL GLASS STOP	EXTRUDED ALUM. A6063-T6	KEYMARK
36	FS-01880	1" VERTICAL GLASS STOP	EXTRUDED ALUM. A6063-T6	KEYMARK
37	FS-02301	POCKET DOOR HOOK STRIP BASE	EXTRUDED ALUM. A6063-T6	KEYMARK
38	FS-02172	POCKET DOOR HOOK STRIP BASE COVER	EXTRUDED ALUM. A6063-T6	KEYMARK
39	FS-02173	POCKET DOOR HOOK STRIP	EXTRUDED ALUM. A6063-T6	KEYMARK

BILL OF MATERIALS

NO.	PART NO.	DESCRIPTION	MFG
40		FRAME ASSEMBLY SCREWS #10 X 1 1/4" PH F SS	
41		SILL ASSEMBLY SCREWS #8 X 1/4" PH F SS	
42		ROLLER INSTALLATION SCREWS #8 X 5/8" PH F SS	
43		PANEL ASSEMBLY SCREWS #10 X 1 1/4" F SS	
44		SCREEN ASSEMBLY SCREWS #8 X 5/8" PH TYPE F	
45		ROLLER INSTALLATION SCREWS #8 X 3/4" TYPE F	
46	BF04122-1	WEEP HOLE BAFFLES	
47	TP870	IMPACT GLASS STOP VINYL	
48	1414	OLYMPUS HANDLE SET	
49	1988-9000	TANDEM ROLLERS	
50	TP876	INTERLOCK BUMPER	
51	W33351NK000	TOP/BOTTOM RAIL FINSEAL .187 x .350	
52	W33221NK000	WEATHERSTRIP FINSEAL .187 x .220	
53	W23401NK	WEATHERSTRIPING .187 x .400	
54	W13131NK	WEATHERSTRIPING .187 x .130	
55	V998B	GLAZING TAPE 1/4" x 3/8"	
56	NRAHP	PANEL HEIGHT ADJUSTMENT HOLE PLUGS	
57	2468	DUAL POINT MORTISE LOCK	
58	2470	MORTISE LOCK THUMB TURN	
59	SGD-205-CH	LOCK & KEEPER	
60	PCT 300 WHYC	HANDLE	
61	NPG	NYLON PANEL GUIDE	
62	PJS 7623-09-SS-N	ROLLER	
63	18 x 16	FIBERGLASS SCREEN MESH	
64	TP-055 .175 SSS	SCREEN SPLINE	
65	SIKA 552	SEALANT	
66	NSB 3/16-3/4-2	GLASS SETTING BLOCKS	
67	GLAZING TYPE A	9/16" IMPACT GLASS O.A. CONSISTING OF: 1/4" HS + .075" VANCEVA BY SOLUTIA + 1/4" HS	
68	GLAZING TYPE B	1" IGU O.A. CONSISTING OF: 3/16" HS + .075" VANCEVA BY SOLUTIA +3/16" HS (INSIDE LITE) + 3/8" AIR + 3/16" TEMP (OUTSIDE LITE)	
69		1/4" DIA. ELCO CRETE-FLEX SS4 TAPCON	
70		1/4" WOOD SCREW	
72		#8 X 1/4" PH MACHINE SCREW	

PRODUCT REVISED
as complying with the Florida Building Code
Acceptance No 12-0130.01
Expiration Date 3-11-15
By Ishaq I. Chanda
Miami Dade Product Control

PRODUCT RENEWED
as complying with the Florida Building Code
Acceptance No 08-1107.06
Expiration Date MAR 17, 2015
By Ishaq I. Chanda
Miami-Dade Product Control Division

SHEET	REV	DESCRIPTION	DATE	BY
1-14	D	PER DADE LETTER DATED 9/1/09	12/7/09	TJH
1-14	C	PER DADE LETTER DATED 12/7/08	03/13/09	TJH
1	B	General revision and update to current FBC	08/04/08	DRL
1	A	Per Dade County letter dated	12/03/04	DRL

REVISIONS

LUIS R. LOMAS P.E.
Luis R. Lomas
1/4/10
FLORIDA REGISTRATION NO. 62514

WinDoor INCORPORATED
7500 AMSTERDAM DRIVE
ORLANDO, FL 32832
Phone: 407.481.8400
Fax: 407.481.0505
www.windoorinc.com

Dwg Title:
SERIES 8000 SGD LARGE MISSILE 5'0 X 8'0 PANELS
BILL OF MATERIALS

SIZE	Drn By:	DWG NO.	REV
B	DRL	WIND0081	D

SCALE N.T.S. | DATE: 09/13/04 | SHEET 12 OF 14

(1) TWO TRACK FRAME HEAD WS/NS
TYP. WALL THICKNESS 0.075

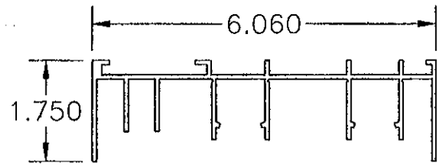

(2) TWO TRACK FRAME JAMB WS/NS
TYP. WALL THICKNESS 0.075

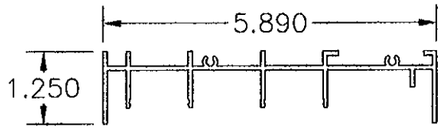

(3) TWO TRACK SILL PAN WS/NS
TYP. WALL THICKNESS 0.080

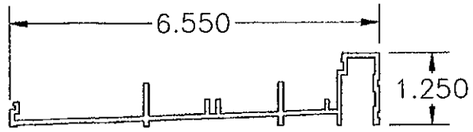

(4) TWO TRACK SILL INSERT WS
TYP. WALL THICKNESS 0.075

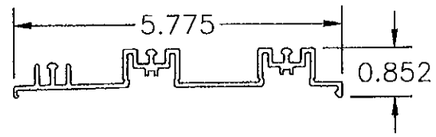

(5) 3 TRACK FRAME HEAD
TYP. WALL THICKNESS 0.075

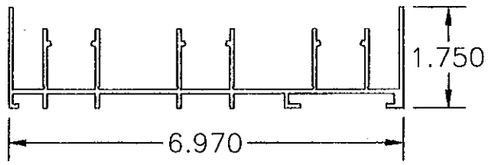

(6) 3 TRACK FRAME JAMB
TYP. WALL THICKNESS 0.075

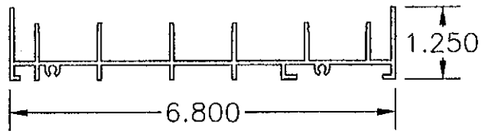

(7) 3 TRACK FRAME SILL PAN
TYP. WALL THICKNESS 0.080

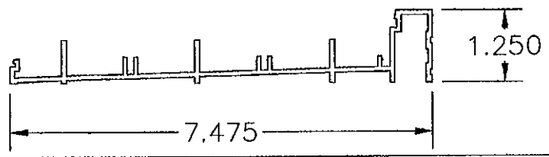

(8) 3 TRACK FRAME SILL INSERT
TYP. WALL THICKNESS 0.075

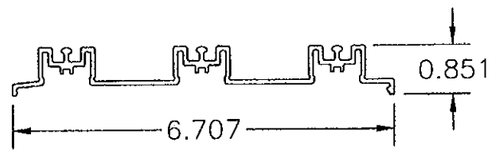

(9) 4 TRACK FRAME HEAD
TYP. WALL THICKNESS 0.075

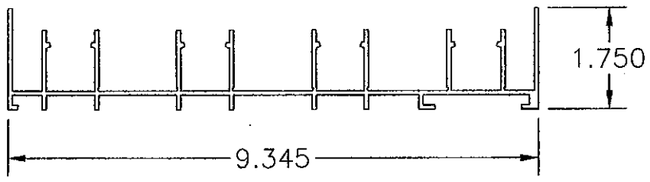

(10) 4 TRACK FRAME JAMB
TYP. WALL THICKNESS 0.075

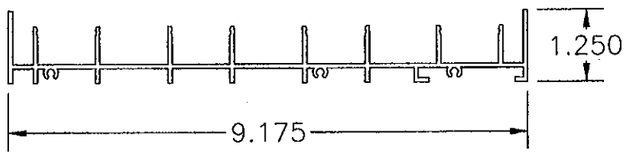

(11) 4 TRACK FRAME SILL PAN
TYP. WALL THICKNESS 0.080

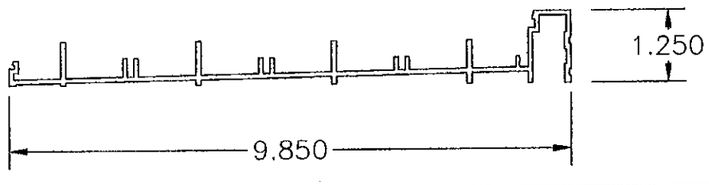

(12) 4 TRACK FRAME SILL INSERT
TYP. WALL THICKNESS 0.075

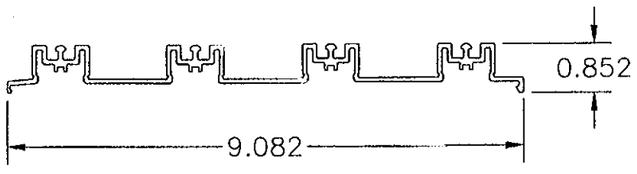

(13) PANEL TOP & BOTTOM
RAIL TYP. WALL
THICKNESS 0.080

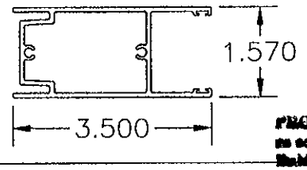

(14) PANEL INTERLOCK TYP.
WALL THICKNESS 0.080

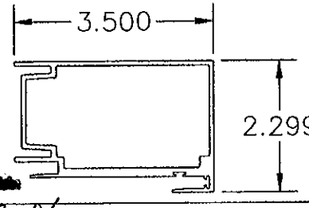

(15) PANEL LOCK/PLAIN STILE
TYP. WALL THICKNESS 0.080

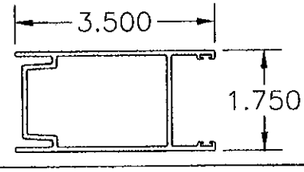

(16)
FEMALE BUTT
STILE
TYP. WALL
THICKNESS 0.080

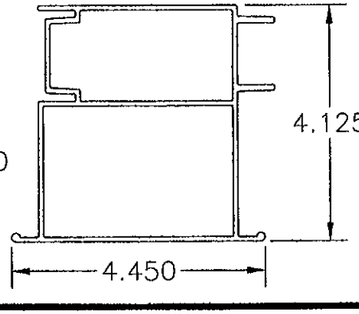

PRODUCT REVISED
as complying with the Florida Building Code
Acceptance No. 12-0130.06
Expiration Date 3/17/15
By Ishaq I. Chanda
Miami Dade Product Control

PRODUCT RENEWED
as complying with the Florida Building Code
Acceptance No. 08-1107.06
Expiration Date MAR 17, 2015
By Ishaq I. Chanda
Miami-Dade Product Control Division

SHEET	REV	DESCRIPTION	DATE	BY
1-14	D	PER DADE LETTER DATED 9/1/09	12/7/09	TJH
1-14	C	PER DADE LETTER DATED 12/7/08	03/13/09	TJH
1	B	General revision and update to current FBC	08/04/08	DRL
1	A	Per Dade County letter dated	12/03/04	DRL

REVISIONS

LUIS R. LOMAS P.E.
1/4/10
FLORIDA REGISTRATION
NO. 62514

WinDoor INCORPORATED
7500 AMSTERDAM DRIVE
ORLANDO, FL 32832
Phone: 407.481.8400
Fax: 407.481.0505
www.windoorinc.com

Dwg Title:
SERIES 8000 SGD LARGE MISSILE 5'0 X 8'0 PANELS
COMPONENTS

SIZE	Drn By:	DWG NO.	REV
B	DRL	WIND0081	D

SCALE	DATE:	SHEET
N.T.S.	09/13/04	13 OF 14

(17) 9/16" VERTICAL GLASS STOP

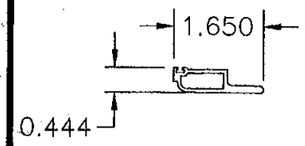

(18) 9/16" HORIZONTAL GLASS STOP

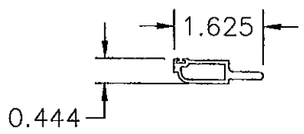

(19) ROLL BACKUP TYP. WALL THICKNESS 0.175

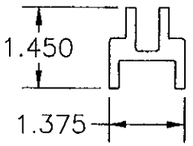

(20) FRAME HEAD INSERT TYP. WALL THICKNESS 0.060

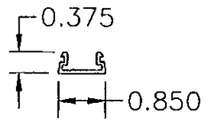

(21) FRAME HEAD COVER TYP. WALL THICKNESS 0.050

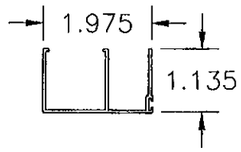

(22) FRAME JAMB INSERT TYP. WALL THICKNESS 0.060

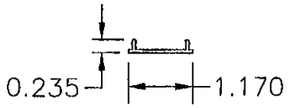

(23) FRAME STILE JAMB INSERT TYP. WALL THICKNESS 0.060

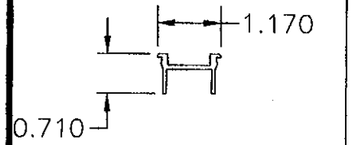

(24) FRAME SILL COVER TYP. WALL THICKNESS 0.050

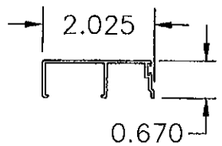

(25) 3" SILL RISER TYP. WALL THICKNESS 0.060

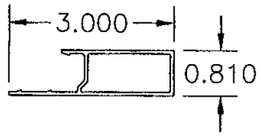

(26) SCREEN INTERLOCK ADAPTER TYP. WALL THICKNESS 0.060

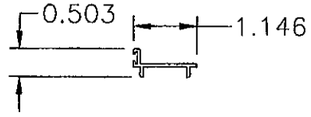

(27) SCREEN STILE TYP. WALL THICKNESS 0.062

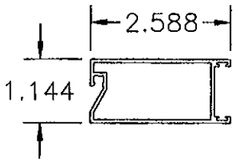

(28) SCREEN ASTRAGAL TYP. WALL THICKNESS 0.050

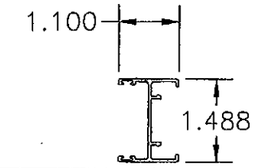

(29) SCREEN TOP/BOTTOM RAIL TYP. WALL THICKNESS 0.064

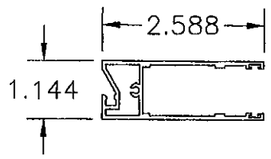

(30) 1 1/2" SILL RISER TYP. WALL THICKNESS 0.060

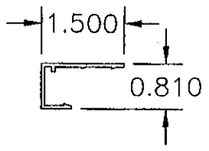

(31) 2 1/4" SILL RISER TYP. WALL THICKNESS 0.060

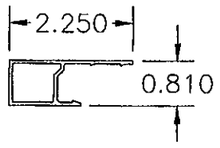

(32) 3 1/2" SILL RISER TYP. WALL THICKNESS 0.060

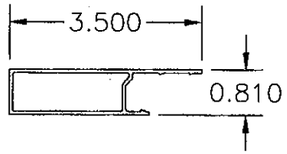

(33) 4 1/4" SILL RISER TYP. WALL THICKNESS 0.060

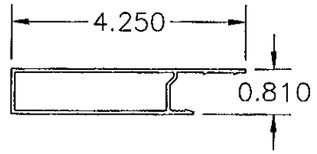

(34) REINFORCEMENT BAR TYP. WALL THICKNESS 0.250

A16061-T6
4/12/12

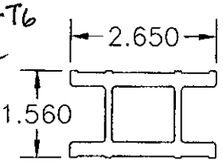

(35) 1" HORIZONTAL GLASS STOP

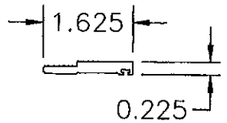

(36) 1" VERTICAL GLASS STOP

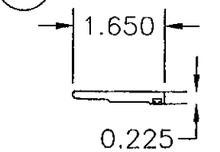

(37) POCKET DOOR HOOK STRIP BASE TYP. WALL THICKNESS 0.075

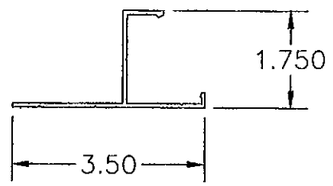

(38) POCKET DOOR STRIP HOOK BASE COVER TYP. WALL THICKNESS 0.075

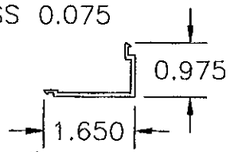

(39) POCKET DOOR HOOK STRIP TYP. WALL THICKNESS 0.080

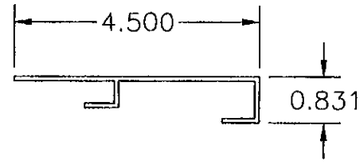

PRODUCT REVISED
as complying with the Florida Building Code
Acceptance No. 12-0130.06
Expiration Date MARCH 1, 2015
By Ishaq I. Chanda
Miami Dade Product Control Division

PRODUCT RENEWED
as complying with the Florida Building Code
Acceptance No. 08-1107.06
Expiration Date MAR 17, 2015
By Ishaq I. Chanda
Miami Dade Product Control Division

SHEET	REV	DESCRIPTION	DATE	BY
1-14	D	PER DADE LETTER DATED 9/1/09	12/7/09	TJH
1-14	C	PER DADE LETTER DATED 12/7/08	03/13/09	TJH
1	B	General revision and update to current FBC	08/04/08	DRL
1	A	Per Dade County letter dated	12/03/04	DRL

REVISIONS

LUIS R. LOMAS P.E.
1/4/10
FLORIDA REGISTRATION NO. 52514

WinDoor INCORPORATED
7500 AMSTERDAM DRIVE
ORLANDO, FL 32832
Phone: 407.481.8400
Fax: 407.481.0505
www.windoorinc.com

Dwg Title:
SERIES 8000 SGD LARGE MISSILE 5'0 X 8'0 PANELS COMPONENTS

SIZE	Drn By:	DWG NO.	REV
B	DRL	WIND0081	D

SCALE	DATE:	SHEET
N.T.S.	09/13/04	14 OF 14