MIAMI-DADE COUNTY
DEPARTMENT OF PERMITTING, ENVIRONMENT, AND REGULATORY AFFAIRS (PERA)
BOARD AND CODE ADMINISTRATION DIVISION

NOTICE OF ACCEPTANCE (NOA)

MIAMI-DADE COUNTY
PRODUCT CONTROL SECTION
11805 SW 26 Street, Room 208
Miami, Florida 33175-2474
T (786) 315-2590 F (786) 315-2599
www.miamidade.gov/pera/

WinDoor, Incorporated
7500 Amsterdam drive
Orlando, Florida, 32832

SCOPE:

This NOA is being issued under the applicable rules and regulations governing the use of construction materials. The documentation submitted has been reviewed and accepted by Miami-Dade County PERA -Product Control Section to be used in Miami Dade County and other areas where allowed by the Authority Having Jurisdiction (AHJ).

This NOA shall not be valid after the expiration date stated below. The Miami-Dade County Product Control Section (In Miami Dade County) and/or the AHJ (in areas other than Miami Dade County) reserve the right to have this product or material tested for quality assurance purposes. If this product or material fails to perform in the accepted manner, the manufacturer will incur the expense of such testing and the AHJ may immediately revoke, modify, or suspend the use of such product or material within their jurisdiction. PERA reserves the right to revoke this acceptance, if it is determined by Miami-Dade County Product Control Section that this product or material fails to meet the requirements of the applicable building code.

This product is approved as described herein, and has been designed to comply with the Florida Building Code, including the High Velocity Hurricane Zone.

DESCRIPTION: Series "8100" Aluminum Sliding Glass Door W/WO Reinforcements-S.M.I.

APPROVAL DOCUMENT: Drawing No. **08-00878,** titled "8100 Series SMI: Reinforced & Non-reinforced", sheets 1 through 26 of 26, prepared by manufacturer, dated 12/03/09 and last revised on 03/01/2011, signed and sealed by Luis R. Lomas, P.E., bearing the Miami-Dade County Product Control Revision stamp with the Notice of Acceptance number and expiration date by the Miami-Dade County Product Control Section.

MISSILE IMPACT RATING: Small Missile Impact Resistant

Limitations:

1. 3-1/2" sill riser item # 36(sheets 1 thru 7) is limited to positive (exterior) Dp = **+100 PSF**, item #37 (4-1/2") sill riser to be used above +100 psf.
2. Two (2) anchors at each anchor location shown in sheets 8 & 9 at head, sill and jambs, except one (1) anchor at each pocket (hook-strips jamb) required.

LABELING: Each unit shall bear a permanent label with the manufacturer's name or logo, city, state and series and following statement: "Miami-Dade County Product Control Approved", unless otherwise noted herein.

RENEWAL of this NOA shall be considered after a renewal application has been filed and there has been no change in the applicable building code negatively affecting the performance of this product.

TERMINATION of this NOA will occur after the expiration date or if there has been a revision or change in the materials, use, and/or manufacture of the product or process. Misuse of this NOA as an endorsement of any product, for sales, advertising or any other purposes shall automatically terminate this NOA. Failure to comply with any section of this NOA shall be cause for termination and removal of NOA.

ADVERTISEMENT: The NOA number preceded by the words Miami-Dade County, Florida, and followed by the expiration date may be displayed in advertising literature. If any portion of the NOA is displayed, then it shall be done in its entirety.

INSPECTION: A copy of this entire NOA shall be provided to the user by the manufacturer or its distributors and shall be available for inspection at the job site at the request of the Building Official.

This NOA **revises NOA # 10-0209.13** and consists of this page 1 and evidence pages E-1, as well as approval document mentioned above.

The submitted documentation was reviewed by **Ishaq I. Chanda, P.E.**

4/9/12

MIAMI-DADE COUNTY APPROVED

NOTICE OF ACCEPTANCE: EVIDENCE SUBMITTED

A. DRAWINGS

1. Manufacturer's die drawings and sections (transferred from file # **10-0209.13**)
2. Drawing No. **08-00878,** titled "8100 Series SMI: Reinforced & Non-reinforced", sheets 1 through 26 of 26, prepared by manufacturer, dated 12/03/09 and last revised on 03/01/2011, signed and sealed by Luis R. Lomas, P.E.

Note: This revision consists of FBC 2010 update only.

B. TESTS (transferred from file # **10-0209.13**)

1. Test reports on: 1) Air Infiltration Test, per FBC, TAS 202-94
   2) Uniform Static Air Pressure Test, Loading per FBC TAS 202-94
   3) Water Resistance Test, per FBC, TAS 202-94
   4) Small Missile Impact Test per FBC, TAS 201-94
   5) Cyclic Wind Pressure Loading per FBC, TAS 203-94
   6) Forced Entry Test, per FBC 2411 3.2.1, TAS 202-94

Along with marked-up drawings and installation diagram of Aluminum Sliding Glass, prepared by National Certified Testing Laboratories Inc, Test Report No. **NCTL-210-3573-3** dated 07/31/09 and **revised** and **reissued** on 12/16/10 and **NCTL-210-3573-4** dated 07/30/09 and **revised** and **reissued** on 12/16/10, both signed & sealed by Gerald J, Ferrara, P.E. (Note: This test reports have addendum letters dated 08/03/10 &11/29/10, issued by National Certified Testing Laboratories Inc., signed & sealed by Gerald J, Ferrara, P.E.)

C. CALCULATIONS

1. Statement letter of conformance to FBC 2010, dated January 19, 2012, prepared, signed and sealed by Luis R. Lomas, P.E.
2. Anchor verification calculations complying w/ FBC-2007, dated 02/03/10 and last revised on 09/02/10, prepared, signed and sealed by Luis R. Lomas, P.E. (transferred from file # **10-0209.13**).
3. Glazing complies with ASTME-1300-02 &-04

D. QUALITY ASSURANCE

1. Miami Dade Department of Permitting, Environment, and Regulatory Affairs (PERA).

E. MATERIAL CERTIFICATIONS

1. Notice of Acceptance No. **11-0624.02** issued to E.I. DuPont DeNemours & Co., Inc. for their "**DuPont Sentry Glass ® Plus**", expiring on 01/14/17.
2. Notice of Acceptance No. **11-00624.01** issued to E.I. DuPont DeNemours, for "DuPont Butacite ® PVB", expiring on 12/11/2016
3. Notice of Acceptance No. **08-1224.04** issued to Solutia, for "Saflex Composite glass interlayer w/ PET core", expiring on 12/11/2013.

F. STATEMENTS

1. Statement letter of conformance to FBC 2010 and "No financial interest", dated 01/19/12, prepared, signed and sealed by Luis R. Lomas, P.E.
2. Statement letters of conformance to FBC 2007 and "No financial interest", both dated Jan 02, 2010, signed and sealed by Luis R. Lomas, P.E. (transferred from file # **10-0209.13**)
3. Lab compliance statement, as part of above referenced test report.

G. OTHER

1. This NOA **revises** NOA # **10-0209.13**, expiring on March 31, 2016.
2. Test Proposals # **08-0955B** (consolidated) dated Jan 15, 2009, approved by BCCO.

Ishaq I. Chanda

Ishaq I. Chanda, P.E.
Product Control Examiner
NOA No 12-0130.14
Expiration Date: March 31, 2016
Approval Date: April 19, 2012

REV	DESCRIPTION	DATE	APPROVED
A	PER DADE LETTER DATED MAY 06, 2010	09/01/10	R.L.
B	PER LETTERS DATED 5/6/10 & 9/29/10	12/09/10	R.L.

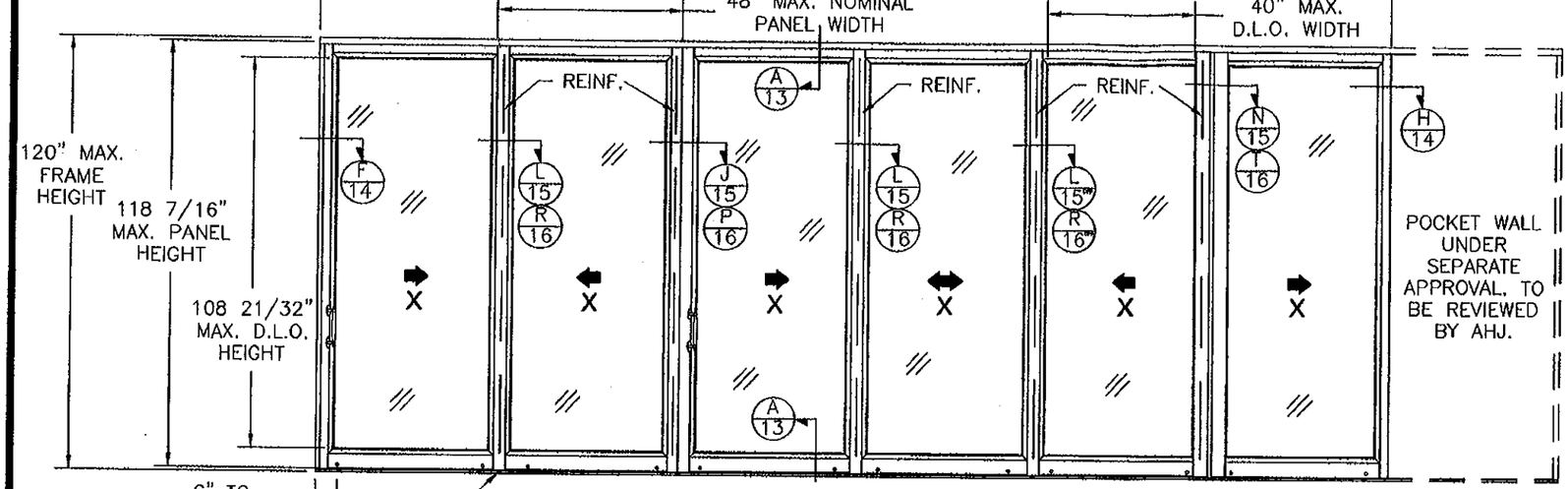

8100 SERIES 4'0 x 10'0 SMI SGD
TYPICAL ELEVATION EXTERIOR VIEW

(6) PANELS SHOWN. UNLIMITED NUMBER OF PANELS IN UNLIMITED CONFIGURATIONS IS APPLICABLE AS LONG AS INDIVIDUAL PANEL SIZE DOES NOT EXCEED MAXIMUM PANEL SIZE AND USE VERTICAL CONDITIONS AS SHOWN.

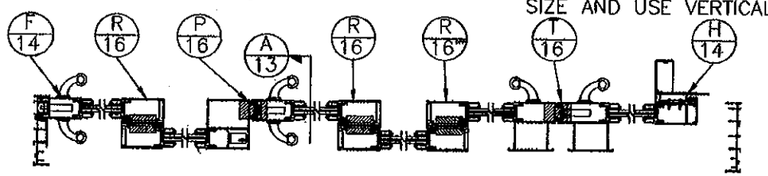

8100 SERIES 4'0 x 10'0 SMI NON-REINFORCED SGD
2 TRACK LAYOUT

NON-REINFORCED WITH SILL RISER ITEM #35

DESIGN PRESSURE RATING	IMPACT RATING
±70PSF	SMALL MISSILE IMPACT

FOR ADDITIONAL SIZES SEE CHARTS SHEET 7

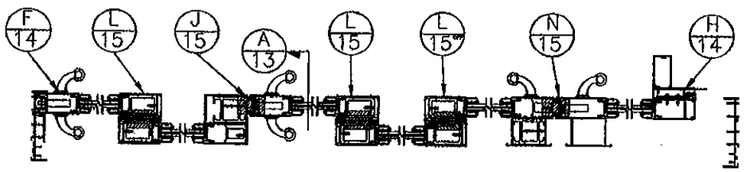

8100 SERIES 4'0 x 10'0 SMI REINFORCED SGD
2 TRACK LAYOUT

REINFORCED WITH SILL RISER ITEMS #36 AND #37

DESIGN PRESSURE RATING	IMPACT RATING
±110PSF	SMALL MISSILE IMPACT

FOR ADDITIONAL SIZES SEE CHARTS SHEET 7

NOTES:

1) THE PRODUCT SHOWN HEREIN IS DESIGNED AND MANUFACTURED TO COMPLY WITH REQUIREMENTS OF THE FLORIDA BUILDING CODE.
2) WOOD FRAMING/1X OR 2X BUCK, 20 GA. 2X WOOD BACKED STEEL STUD OR MASONRY/CONCRETE OPENING TO BE DESIGNED AND ANCHORED TO PROPERLY TRANSFER ALL LOADS TO STRUCTURE. WOOD FRAMING/1X OR 2X BUCK, 20 GA. 2X WOOD BACKED STEEL STUD OR MASONRY/CONCRETE OPENING IS THE RESPONSIBILITY OF THE ARCHITECT OR ENGINEER OF RECORD.
3) ALLOWABLE STRESS INCREASE OF 1/3 WAS NOT USED IN THE DESIGN OF THE PRODUCT SHOWN HEREIN. WIND LOAD DURATION FACTOR Cd=1.6 WAS USED FOR WOOD ANCHOR CALCULATIONS.
4) FRAME MATERIAL: EXTRUDED ALUMINUM 6063-T6 .075" THICK.
   PANEL MATERIAL: EXTRUDED ALUMINUM 6063-T6 .080" THICK.
5) UNITS MUST BE GLAZED WITH LARGE MISSILE IMPACT SINGLE LAMINATED OR INSULATED LAMINATED GLASS AS SHOWN IN GLAZING DETAILS ON SHEETS 11 AND 12, PER ASTM E1300-04.
6) HURRICANE PROTECTION DEVICES ARE NOT REQUIRED IF THE UNITS ARE USED ABOVE 30 FEET IN HEIGHT IN ANY OR ALL STRUCTURES.
7) APPROVED TO BE INSTALLED ON A 2 TRACK, 3 TRACK OR 4 TRACK FRAME SYSTEM WITH OR WITHOUT POCKETS.

PANEL HEIGHT AND D.L.O. FORMULA
PANEL HEIGHT = UNIT HEIGHT - 1 9/16"
MAXIMUM D.L.O. HEIGHT = PANEL HEIGHT - 9 1/2"
D.L.O. WIDTH = NOMINAL PANEL WIDTH - 9 1/2"

PRODUCT REVISED as complying with the Florida Building Code Application No. 12-0130.14 Expiration Date MAR 31, 2016 Ishaq I. Chaya Miami-Dade Product Control

TABLE OF CONTENTS

SHEET NO.	DESCRIPTION
1 - 6	ELEVATIONS, HORIZONTAL CROSS SECTIONS AND NOTES
7	DESIGN PRESSURE CHARTS
8 - 10	ANCHORING LAYOUT, NOTES AND DETAILS
11 - 12	BILL OF MATERIALS AND GLAZING DETAILS
13 - 19	CROSS SECTIONS
20 - 23	INSTALLATION DETAILS
24 - 26	COMPONENTS

Approved as complying with the Florida Building Code Date 3/31/11 NOA# 10-0209.15 Miami-Dade Product Control By Ishaq I. Chaya

WinDoor INCORPORATED
7500 AMSTERDAM DRIVE
ORLANDO, FL 32832
Phone: 407.481.8400
Fax: 407.481.0505
www.windoorinc.com

8100 SERIES SMI
REINFORCED & NON-REINFORCED
4'0 x 10'0 PANEL 2TRACK ELEVATIONS

DRAWN:	DWG NO.	REV
TJH	08-00878	B
SCALE NTS	DATE 12/03/09	SHEET 1 OF 26

Luis R. Lomas P.E. 3/4/11 STATE OF Florida No. 62514

REV	DESCRIPTION	DATE	APPROVED
A	PER DADE LETTER DATED MAY 06, 2010	09/01/10	R.L.
B	PER LETTERS DATED 5/6/10 & 9/29/10	12/09/10	R.L.

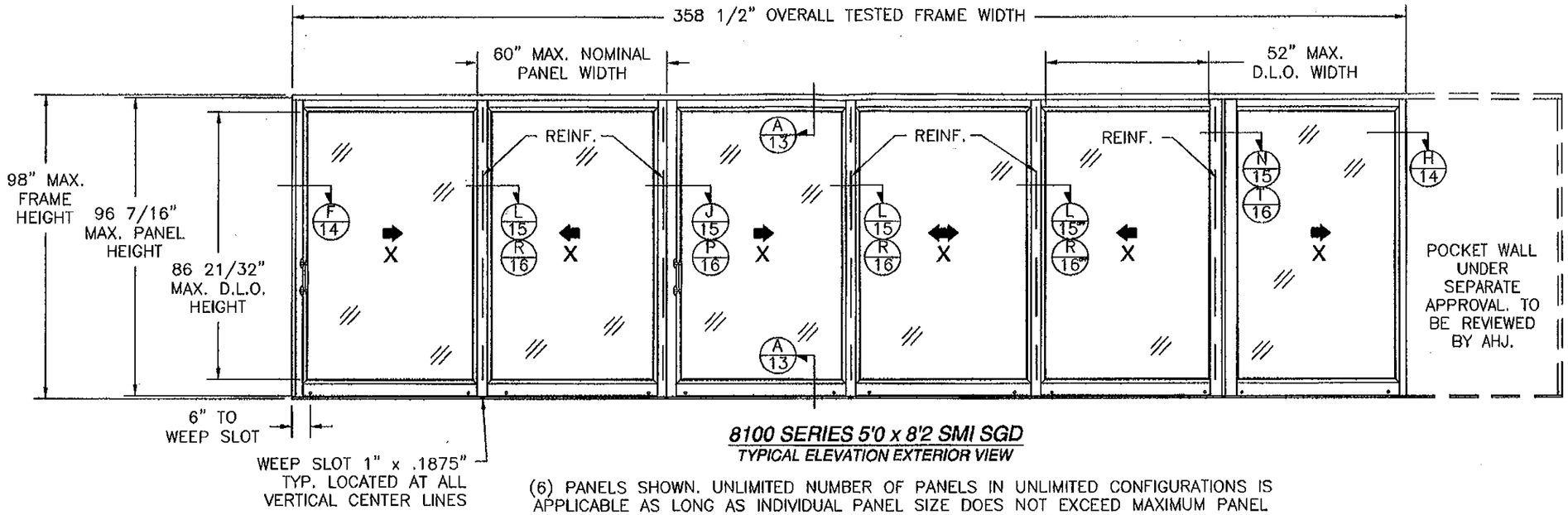

8100 SERIES 5'0 x 8'2 SMI SGD
TYPICAL ELEVATION EXTERIOR VIEW

(6) PANELS SHOWN. UNLIMITED NUMBER OF PANELS IN UNLIMITED CONFIGURATIONS IS APPLICABLE AS LONG AS INDIVIDUAL PANEL SIZE DOES NOT EXCEED MAXIMUM PANEL SIZE AND USE VERTICAL CONDITIONS AS SHOWN.

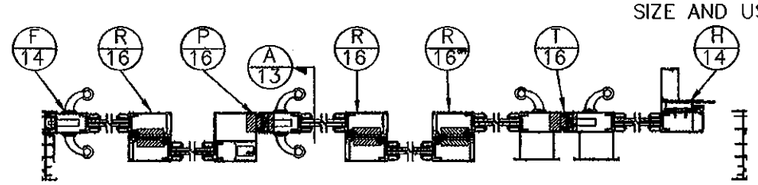

8100 SERIES 5'0 x 8'2 SMI NON-REINFORCED SGD
2 TRACK LAYOUT

NON-REINFORCED WITH SILL RISER ITEM #35

DESIGN PRESSURE RATING	*IMPACT RATING*
±70PSF	*SMALL MISSILE IMPACT*

FOR ADDITIONAL SIZES SEE CHARTS SHEET 7

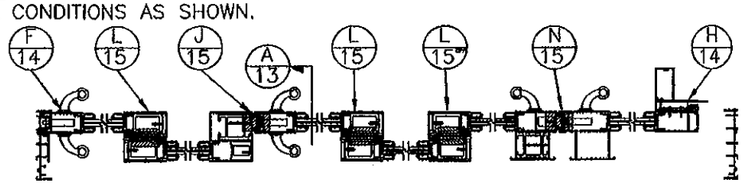

8100 SERIES 5'0 x 8'2 SMI REINFORCED SGD
2 TRACK LAYOUT

REINFORCED WITH SILL RISER ITEMS #36 AND #37

DESIGN PRESSURE RATING	*IMPACT RATING*
±110PSF	*SMALL MISSILE IMPACT*

FOR ADDITIONAL SIZES SEE CHARTS SHEET 7

PRODUCT REVISED as complying with the Florida Building Code
Acceptance No. 12-0130.14
Expiration Date 3/31/16
By Ishaq I. Chanda
Miami Dade Product Control

PANEL HEIGHT AND D.L.O. FORMULA
PANEL HEIGHT = UNIT HEIGHT – 1 9/16"
MAXIMUM D.L.O. HEIGHT = PANEL HEIGHT – 9 1/2"
D.L.O. WIDTH = NOMINAL PANEL WIDTH – 9 1/2"

Approved as complying with the Florida Building Code
Date 03/31/11
NOA# 11-0209.13
Miami Dade Product Control
By Ishaq I. Chanda

WinDoor INCORPORATED
7500 AMSTERDAM DRIVE
ORLANDO, FL 32832
Phone: 407.481.8400
Fax: 407.481.0505
www.windoorinc.com

8100 SERIES SMI
REINFORCED & NON-REINFORCED
5'0 x 8'2 PANEL 2TRACK ELEVATIONS

DRAWN:	DWG NO.	REV
TJH	08-00878	B
SCALE NTS	DATE 12/03/09	SHEET 2 OF 26

Luis R. Lemas P.E.
Florida No. 62514

REV	DESCRIPTION	DATE	APPROVED
A	PER DADE LETTER DATED MAY 06, 2010	09/01/10	R.L.
B	PER LETTERS DATED 5/6/10 & 9/29/10	12/09/10	R.L.

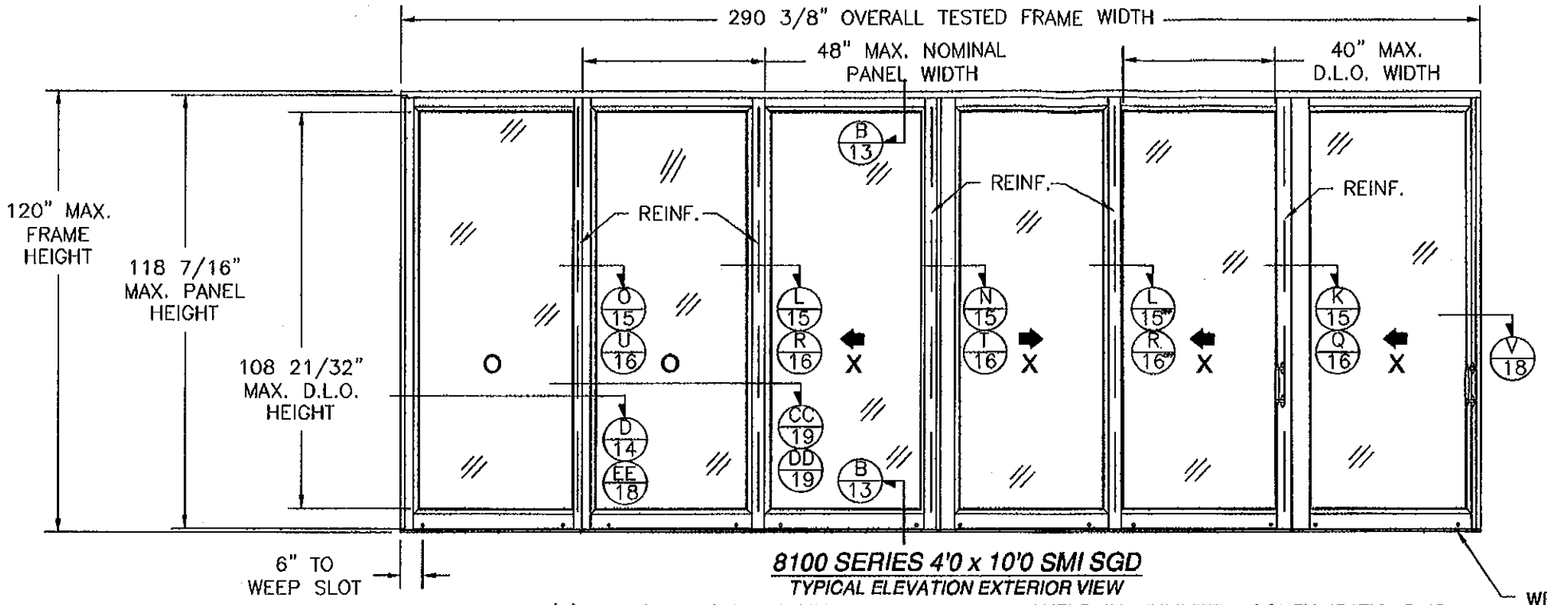

8100 SERIES 4'0 x 10'0 SMI SGD
TYPICAL ELEVATION EXTERIOR VIEW

(6) PANELS SHOWN. UNLIMITED NUMBER OF PANELS IN UNLIMITED CONFIGURATIONS IS APPLICABLE AS LONG AS INDIVIDUAL PANEL SIZE DOES NOT EXCEED MAXIMUM PANEL SIZE AND USE VERTICAL CONDITIONS AS SHOWN.

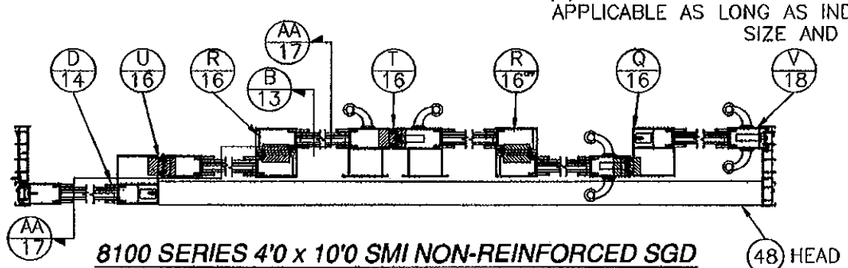

8100 SERIES 4'0 x 10'0 SMI NON-REINFORCED SGD
3 TRACK LAYOUT

NON-REINFORCED WITH SILL RISER ITEM #35

DESIGN PRESSURE RATING	IMPACT RATING
±70PSF	SMALL MISSILE IMPACT

FOR ADDITIONAL SIZES SEE CHARTS SHEET 7

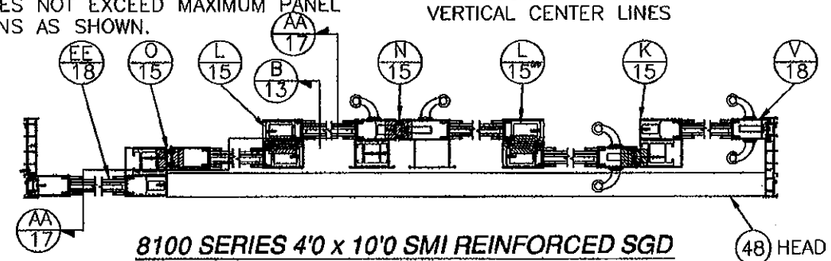

8100 SERIES 4'0 x 10'0 SMI REINFORCED SGD
3 TRACK LAYOUT

REINFORCED WITH SILL RISER ITEMS #36 AND #37

DESIGN PRESSURE RATING	IMPACT RATING
±110PSF	SMALL MISSILE IMPACT

FOR ADDITIONAL SIZES SEE CHARTS SHEET 7

PRODUCT REVISED
as complying with the Florida Building Code
Acceptance No. 12-0130.14
Expiration Date 3/31/16
By Ishaq I. Chanda
Miami Dade Product Control

Approved as complying with the Florida Building Code
Date 03/31/11
NOA# 10-0208.13
Miami Dade Product Control
By Ishaq I. Chanda

WinDoor INCORPORATED
7500 AMSTERDAM DRIVE
ORLANDO, FL 32832
Phone: 407.481.8400
Fax: 407.481.0505
www.windoorinc.com

8100 SERIES SMI
REINFORCED & NON-REINFORCED
4'0 x 10'0 3TRACK ELEVATIONS

DRAWN:	DWG NO.	REV
TJH	08-00878	B
SCALE NTS	DATE 12/03/09	SHEET 3 OF 26

STATE OF FLORIDA
Luis R. Lomas, P.E.
Florida No. 52514

REV	DESCRIPTION	DATE	APPROVED
A	09/01/10	09/01/10	R.L.
B	PER LETTERS DATED 5/6/10 & 9/29/10	12/09/10	R.L.

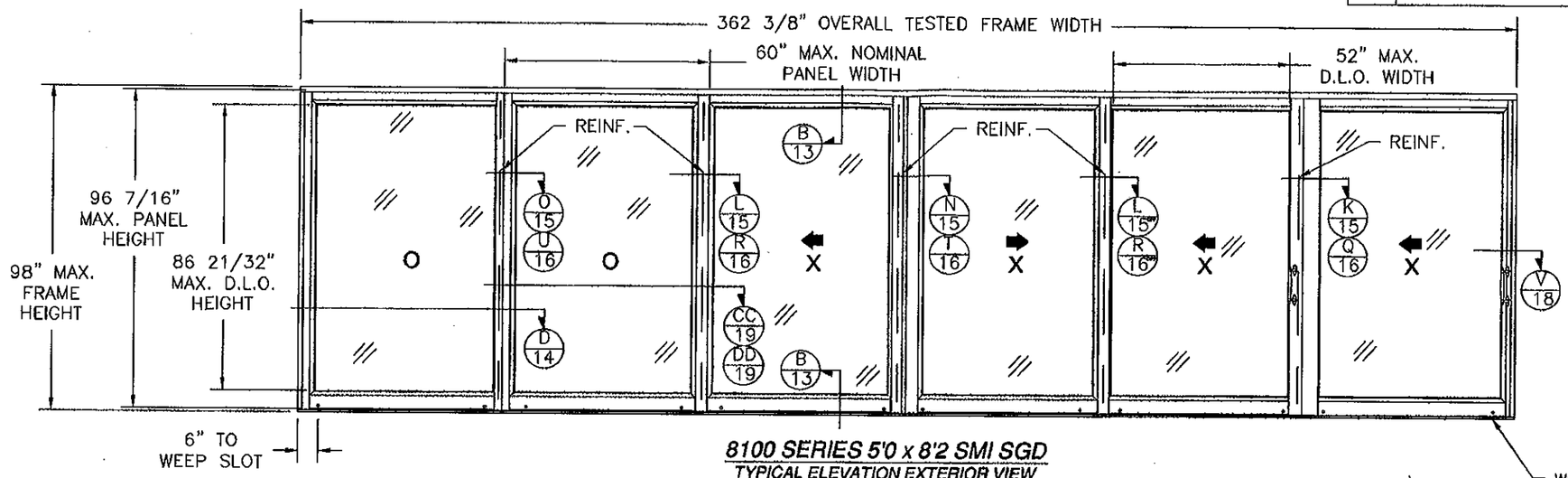

8100 SERIES 5'0 x 8'2 SMI SGD
TYPICAL ELEVATION EXTERIOR VIEW

(6) PANELS SHOWN. UNLIMITED NUMBER OF PANELS IN UNLIMITED CONFIGURATIONS IS APPLICABLE AS LONG AS INDIVIDUAL PANEL SIZE DOES NOT EXCEED MAXIMUM PANEL SIZE AND USE VERTICAL CONDITIONS AS SHOWN.

WEEP SLOT 1" x .1875" TYP. LOCATED AT ALL VERTICAL CENTER LINES

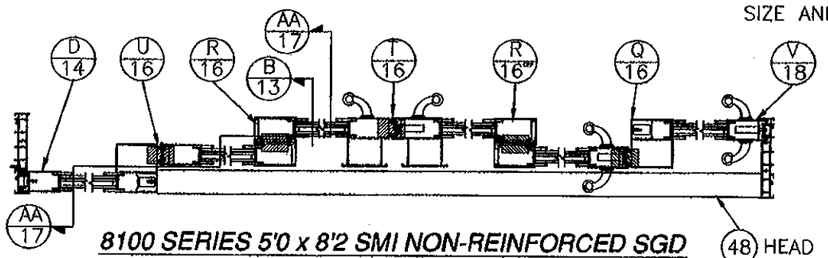

8100 SERIES 5'0 x 8'2 SMI NON-REINFORCED SGD
3 TRACK LAYOUT

NON-REINFORCED WITH SILL RISER ITEM #35

DESIGN PRESSURE RATING	*IMPACT RATING*
±70PSF	*SMALL MISSILE IMPACT*

FOR ADDITIONAL SIZES SEE CHARTS SHEET 7

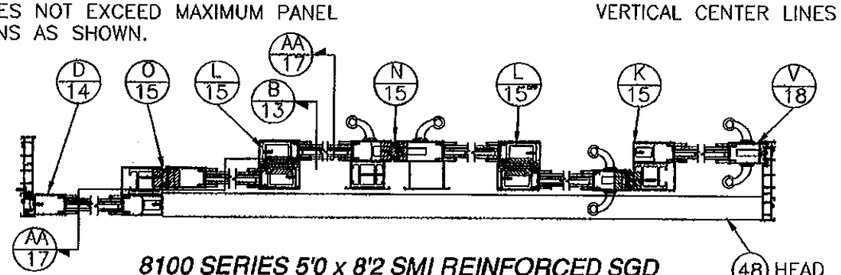

8100 SERIES 5'0 x 8'2 SMI REINFORCED SGD
3 TRACK LAYOUT

REINFORCED WITH SILL RISER ITEMS #36 AND #37

DESIGN PRESSURE RATING	*IMPACT RATING*
±110PSF	*SMALL MISSILE IMPACT*

FOR ADDITIONAL SIZES SEE CHARTS SHEET 7

PRODUCT REVISED
as complying with the Florida Building Code
Acceptance No. 12-0130.14
Expiration Date 3/31/16
By Ishaq I. Chaudhry
Miami Dade Product Control

Approved as complying with the Florida Building Code
Date 03/31/11
NOA# 10-0209.13
Miami Dade Product Control
By Ishaq I. Chaudhry

WinDoor INCORPORATED
7500 AMSTERDAM DRIVE
ORLANDO, FL 32832
Phone: 407.481.8400
Fax: 407.481.0505
www.windoorinc.com

8100 SERIES SMI
REINFORCED & NON-REINFORCED
5'0 x 8'2 3TRACK ELEVATIONS

DRAWN:	DWG NO.	REV
TJH	08-00878	B
SCALE NTS	DATE 12/03/09	SHEET 4 OF 26

Luis R. Lomas P.E.
Florida No. 62514

REV	DESCRIPTION	DATE	APPROVED
A	PER DADE LETTER DATED MAY 06, 2010	09/01/10	R.L.
B	PER LETTERS DATED 5/6/10 & 9/29/10	12/09/10	R.L.

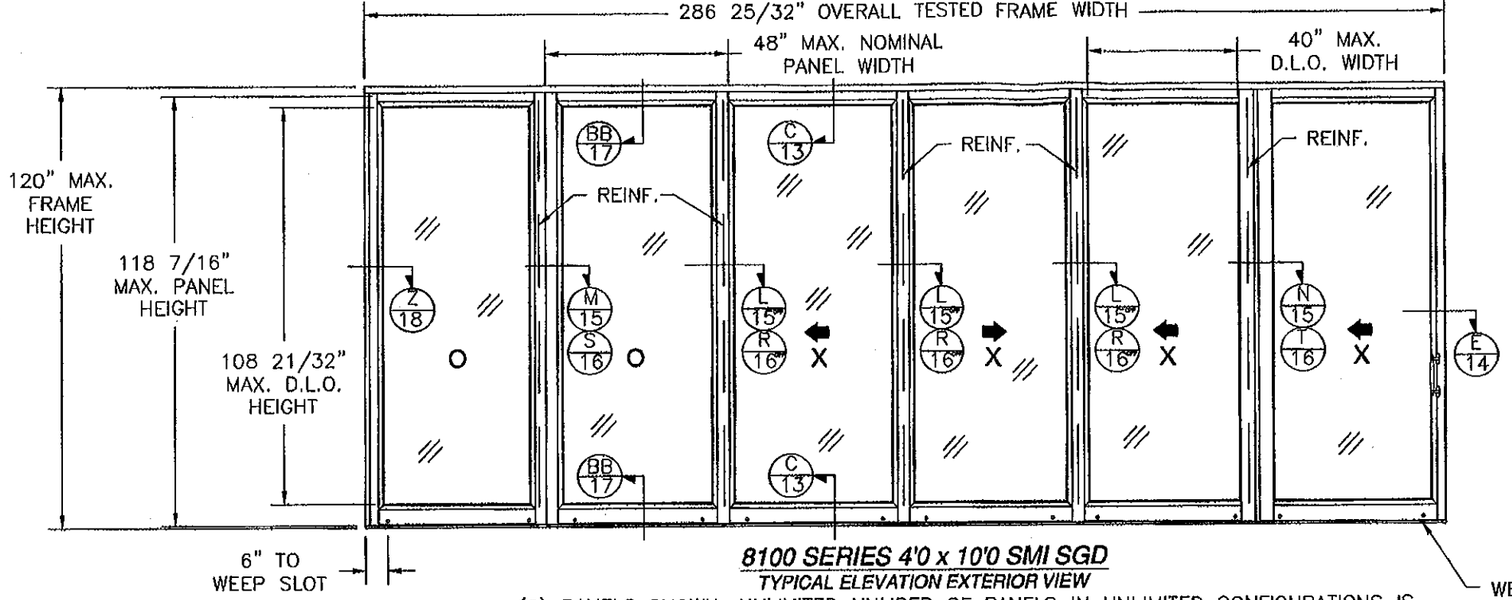

8100 SERIES 4'0 x 10'0 SMI SGD

TYPICAL ELEVATION EXTERIOR VIEW

(6) PANELS SHOWN. UNLIMITED NUMBER OF PANELS IN UNLIMITED CONFIGURATIONS IS APPLICABLE AS LONG AS INDIVIDUAL PANEL SIZE DOES NOT EXCEED MAXIMUM PANEL SIZE AND USE VERTICAL CONDITIONS AS SHOWN.

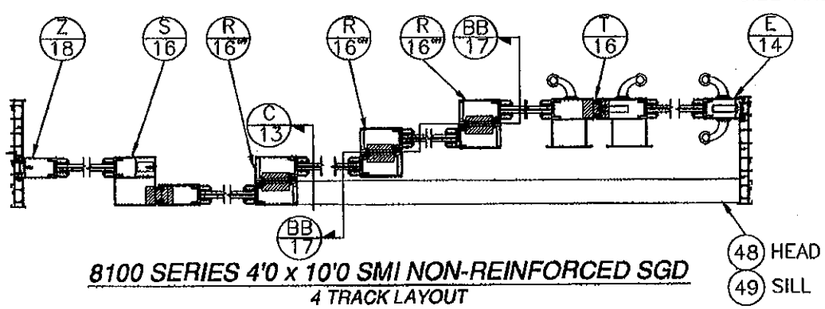

8100 SERIES 4'0 x 10'0 SMI NON-REINFORCED SGD

4 TRACK LAYOUT

NON-REINFORCED WITH SILL RISER ITEM #35

DESIGN PRESSURE RATING	IMPACT RATING
±70PSF	SMALL MISSILE IMPACT

FOR ADDITIONAL SIZES SEE CHARTS SHEET 7

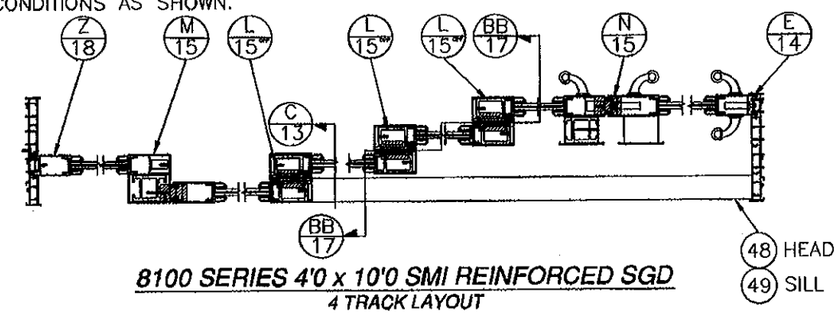

8100 SERIES 4'0 x 10'0 SMI REINFORCED SGD

4 TRACK LAYOUT

REINFORCED WITH SILL RISER ITEMS #36 AND #37

DESIGN PRESSURE RATING	IMPACT RATING
±110PSF	SMALL MISSILE IMPACT

FOR ADDITIONAL SIZES SEE CHARTS SHEET 7

PRODUCT REVISED
as complying with the Florida Building Code
Acceptance No. 12-0130.14
Expiration Date 3/31/16
By Ishaq I. Chanda
Miami Dade Product Control

Approved as complying with the Florida Building Code
Date 03/31/11
NOA# 10-0209.13
Miami Dade Product Control
By Ishaq I. Chanda

WinDoor INCORPORATED
7500 AMSTERDAM DRIVE
ORLANDO, FL 32832
Phone: 407.481.8400
Fax: 407.481.0505
www.windoorinc.com

8100 SERIES SMI
REINFORCED & NON-REINFORCED
4'0 x 10'0 4TRACK ELEVATIONS

DRAWN:	DWG NO.	REV
TJH	08-00878	B
SCALE NTS	DATE 12/03/09	SHEET 5 OF 26

Luis R. Lomas P.E.
Florida No. 62514

REV	DESCRIPTION	DATE	APPROVED
A	PER DADE LETTER DATED MAY 06, 2010	09/01/10	R.L.
B	PER LETTERS DATED 5/6/10 & 9/29/10	12/09/10	R.L.

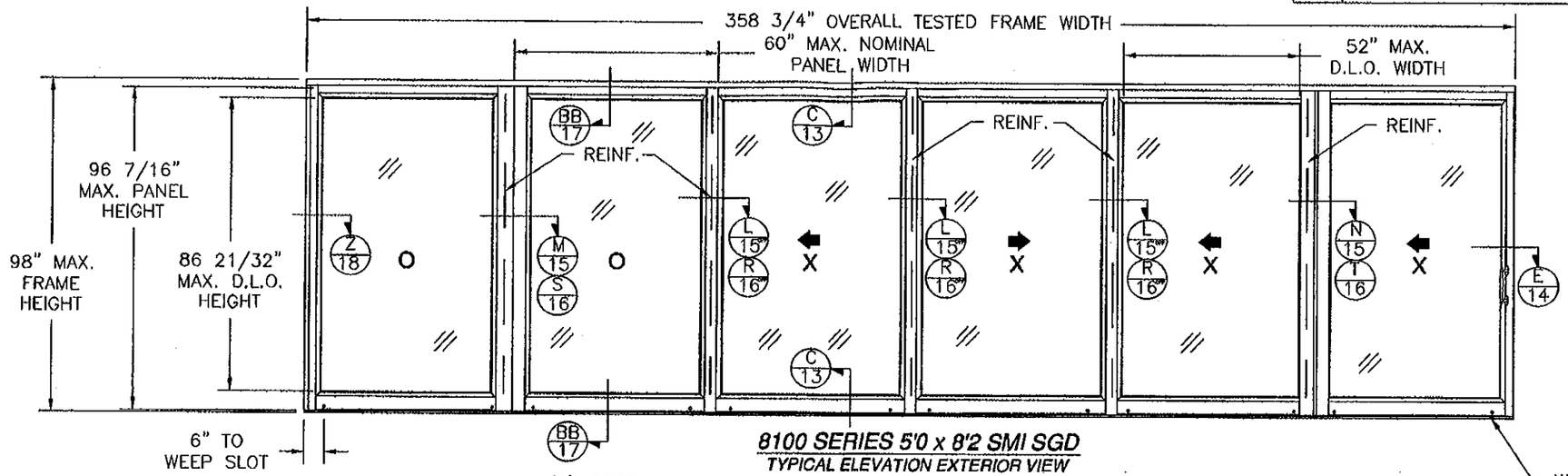

8100 SERIES 5'0 x 8'2 SMI SGD
TYPICAL ELEVATION EXTERIOR VIEW

(6) PANELS SHOWN. UNLIMITED NUMBER OF PANELS IN UNLIMITED CONFIGURATIONS IS APPLICABLE AS LONG AS INDIVIDUAL PANEL SIZE DOES NOT EXCEED MAXIMUM PANEL SIZE AND USE VERTICAL CONDITIONS AS SHOWN.

WEEP SLOT 1" x .1875" TYP. LOCATED AT ALL VERTICAL CENTER LINES

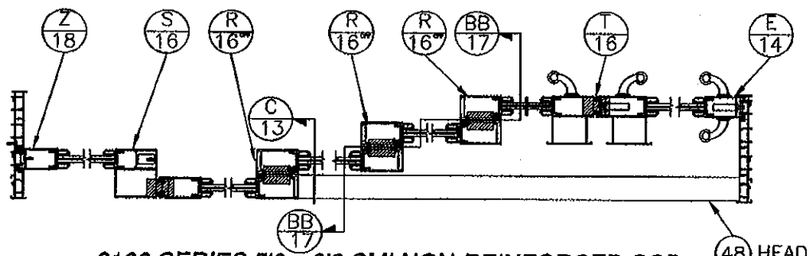

8100 SERIES 5'0 x 8'2 SMI NON-REINFORCED SGD
4 TRACK LAYOUT
NON-REINFORCED WITH SILL RISER ITEM #35

DESIGN PRESSURE RATING	IMPACT RATING
±70PSF	SMALL MISSILE IMPACT

FOR ADDITIONAL SIZES SEE CHARTS SHEET 7

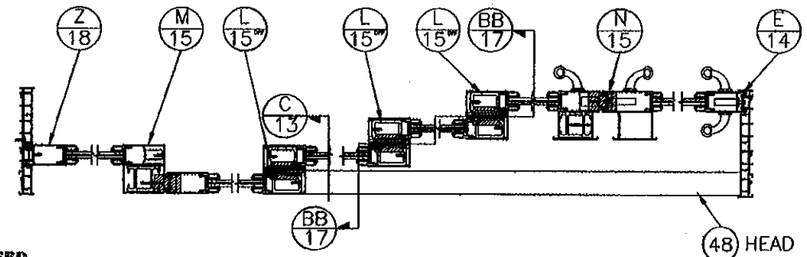

PRODUCT REVISED
as complying with the Florida Building Code
Acceptance No. 12-0130.14
Expiration Date 3/31/11
By Shaq L. Chandler
Miami Dade Product Control

8100 SERIES 5'0 x 8'2 SMI REINFORCED SGD
4 TRACK LAYOUT
REINFORCED WITH SILL RISER ITEMS #36 AND #37

DESIGN PRESSURE RATING	IMPACT RATING
±110PSF	SMALL MISSILE IMPACT

FOR ADDITIONAL SIZES SEE CHARTS SHEET 7

Approved as complying with the Florida Building Code
Date 03/31/11
NOA# 10-0209.13
Miami Dade Product Control
By Shaq L. Chandler

WinDoor INCORPORATED
7500 AMSTERDAM DRIVE
ORLANDO, FL 32832
Phone: 407.481.8400
Fax: 407.481.0505
www.windoorinc.com

8100 SERIES SMI
REINFORCED & NON-REINFORCED
5'0 x 8'2 PANELS 4TRACK ELEVATIONS

DRAWN:	DWG NO.	REV
TJH	08-00878	B
SCALE NTS	DATE 12/03/09	SHEET 6 OF 26

STATE OF FLORIDA
Luis R. Lomas, P.E.
Florida No. 62514

A	PER DADE LETTER DATED MAY 06, 2010	09/01/10	R.L.
B	PER LETTERS DATED 5/6/10 & 9/29/10	12/09/10	R.L.

NON-REINFORCED UNITS (GLAZING TYPES A, B, C, D, E & F)

Maximum design pressure capacity chart (PSF)

8100 Series Aluminum SMI Non-Reinforced SGD with 1 3/4" Sill Riser, Item 33 & 2T Retro Sill, Item 70

Height	Single Panel Width (in)													
	24.0		30.0		36.0		42.0		48.0		54.0		60.0	
(in)	Pos	Neg	Pos	Neg	Pos	Neg	Pos	Neg	Pos	Neg	Pos	Neg	Pos	Neg
80.0	45.0	100.0	45.0	100.0	45.0	100.0	45.0	100.0	45.0	100.0	45.0	99.8	45.0	95.2
84.0	45.0	100.0	45.0	100.0	45.0	100.0	45.0	100.0	45.0	100.0	45.0	92.8	45.0	88.1
96.0	45.0	100.0	45.0	100.0	45.0	100.0	45.0	100.0	45.0	93.3	45.0	76.7	45.0	72.1
98.0	45.0	100.0	45.0	100.0	45.0	100.0	45.0	99.7	45.0	90.8	45.0	74.5	45.0	70.0
108.0	45.0	100.0	45.0	100.0	45.0	99.6	45.0	88.3	45.0	80.0	-	-	-	-
114.0	45.0	100.0	45.0	100.0	45.0	93.3	45.0	82.6	45.0	74.7	-	-	-	-
120.0	45.0	100.0	45.0	100.0	45.0	87.8	45.0	77.6	45.0	70.0	-	-	-	-

Maximum design pressure capacity chart (PSF)

8100 Series Aluminum SMI Non-Reinforced SGD with 2 1/4" Sill Riser, Item 34 & 2T Retro Sill, Item 70

Height	Single Panel Width (in)													
	24.0		30.0		36.0		42.0		48.0		54.0		60.0	
(in)	Pos	Neg	Pos	Neg	Pos	Neg	Pos	Neg	Pos	Neg	Pos	Neg	Pos	Neg
80.0	60.0	100.0	60.0	100.0	60.0	100.0	60.0	100.0	60.0	100.0	60.0	99.8	60.0	95.2
84.0	60.0	100.0	60.0	100.0	60.0	100.0	60.0	100.0	60.0	100.0	60.0	92.8	60.0	88.1
96.0	60.0	100.0	60.0	100.0	60.0	100.0	60.0	100.0	60.0	93.3	60.0	76.7	60.0	72.1
98.0	60.0	100.0	60.0	100.0	60.0	100.0	60.0	99.7	60.0	90.8	60.0	74.5	60.0	70.0
108.0	60.0	100.0	60.0	100.0	60.0	99.6	60.0	88.3	60.0	80.0	-	-	-	-
114.0	60.0	100.0	60.0	100.0	60.0	93.3	60.0	82.6	60.0	74.7	-	-	-	-
120.0	60.0	100.0	60.0	100.0	60.0	87.8	60.0	77.6	60.0	70.0	-	-	-	-

Maximum design pressure capacity chart (PSF)

8100 Series Aluminum SMI Non-Reinforced SGD with 3" Sill Riser, Item 35 & 2T Retro Sill, Item 70

Height	Single Panel Width (in)													
	24.0		30.0		36.0		42.0		48.0		54.0		60.0	
(in)	Pos	Neg	Pos	Neg	Pos	Neg	Pos	Neg	Pos	Neg	Pos	Neg	Pos	Neg
80.0	80.0	100.0	80.0	100.0	80.0	100.0	80.0	100.0	80.0	100.0	80.0	99.8	80.0	95.2
84.0	80.0	100.0	80.0	100.0	80.0	100.0	80.0	100.0	80.0	100.0	80.0	92.8	80.0	88.1
96.0	80.0	100.0	80.0	100.0	80.0	100.0	80.0	100.0	80.0	93.3	76.7	76.7	72.1	72.1
98.0	80.0	100.0	80.0	100.0	80.0	100.0	80.0	99.7	80.0	90.8	74.5	74.5	70.0	70.0
108.0	80.0	100.0	80.0	100.0	80.0	99.6	80.0	88.3	80.0	80.0	-	-	-	-
114.0	80.0	100.0	80.0	100.0	80.0	93.3	80.0	82.6	74.7	74.7	-	-	-	-
120.0	80.0	100.0	80.0	100.0	80.0	87.8	77.6	77.6	70.0	70.0	-	-	-	-

PANEL HEIGHT AND D.L.O. FORMULA
PANEL HEIGHT = UNIT HEIGHT – 1 9/16"
MAXIMUM D.L.O. HEIGHT = PANEL HEIGHT – 9 1/2"
D.L.O. WIDTH = NOMINAL PANEL WIDTH – 9 1/2"

PRODUCT REVISED
as complying with the Florida
Building Code
Acceptance No 12-0130.14
Expiration Date 3/31/11
By Ishaq I. Chanda
Miami Dade Product Control

REINFORCED UNITS (GLAZING TYPES A, B, C, D, E & F)

Maximum design pressure capacity chart (PSF)

8100 Series Aluminum SMI Reinforced SGD with 3" Sill Riser, Item 35 & 2T Retro Sill, Item 70

Height	Single Panel Width (in)													
	24.0		30.0		36.0		42.0		48.0		54.0		60.0	
(in)	Pos	Neg	Pos	Neg	Pos	Neg	Pos	Neg	Pos	Neg	Pos	Neg	Pos	Neg
80.0	80.0	150.0	80.0	150.0	80.0	150.0	80.0	150.0	80.0	150.0	80.0	150.0	80.0	149.6
84.0	80.0	150.0	80.0	150.0	80.0	150.0	80.0	150.0	80.0	150.0	80.0	145.8	80.0	138.5
96.0	80.0	150.0	80.0	150.0	80.0	150.0	80.0	150.0	80.0	146.7	80.0	120.5	80.0	113.3
98.0	80.0	150.0	80.0	150.0	80.0	150.0	80.0	150.0	80.0	142.7	80.0	117.1	80.0	110.0
108.0	80.0	150.0	80.0	150.0	80.0	150.0	80.0	138.7	80.0	125.7	-	-	-	-
114.0	80.0	150.0	80.0	150.0	80.0	146.7	80.0	129.8	80.0	117.3	-	-	-	-
120.0	80.0	150.0	80.0	150.0	80.0	138.0	80.0	121.9	80.0	110.0	-	-	-	-

Maximum design pressure capacity chart (PSF)

8100 Series Aluminum SMI Reinforced SGD with 3 1/2" Sill Riser, Item 36 & 2T Retro Sill, Item 70

Height	Single Panel Width (in)													
	24.0		30.0		36.0		42.0		48.0		54.0		60.0	
(in)	Pos	Neg	Pos	Neg	Pos	Neg	Pos	Neg	Pos	Neg	Pos	Neg	Pos	Neg
80.0	100.0	150.0	100.0	150.0	100.0	150.0	100.0	150.0	100.0	150.0	100.0	150.0	100.0	149.6
84.0	100.0	150.0	100.0	150.0	100.0	150.0	100.0	150.0	100.0	150.0	100.0	145.8	100.0	138.5
96.0	100.0	150.0	100.0	150.0	100.0	150.0	100.0	150.0	100.0	146.7	100.0	120.5	100.0	113.3
98.0	100.0	150.0	100.0	150.0	100.0	150.0	100.0	150.0	100.0	142.7	100.0	117.1	100.0	110.0
108.0	100.0	150.0	100.0	150.0	100.0	150.0	100.0	138.7	100.0	125.7	-	-	-	-
114.0	100.0	150.0	100.0	150.0	100.0	146.7	100.0	129.8	100.0	117.3	-	-	-	-
120.0	100.0	150.0	100.0	150.0	100.0	138.0	100.0	121.9	100.0	110.0	-	-	-	-

Maximum design pressure capacity chart (PSF)

8100 Series Aluminum SMI Reinforced SGD with 4 1/4" Sill Riser, Item 37

Height	Single Panel Width (in)													
	24.0		30.0		36.0		42.0		48.0		54.0		60.0	
(in)	Pos	Neg	Pos	Neg	Pos	Neg	Pos	Neg	Pos	Neg	Pos	Neg	Pos	Neg
80.0	125.3	150.0	125.3	150.0	125.3	150.0	125.3	150.0	125.3	150.0	125.3	150.0	125.3	149.6
84.0	125.3	150.0	125.3	150.0	125.3	150.0	125.3	150.0	125.3	150.0	125.3	145.8	125.3	138.5
96.0	125.3	150.0	125.3	150.0	125.3	150.0	125.3	150.0	125.3	146.7	120.5	120.5	113.3	113.3
98.0	125.3	150.0	125.3	150.0	125.3	150.0	125.3	150.0	125.3	142.7	117.1	117.1	110.0	110.0
108.0	125.3	150.0	125.3	150.0	125.3	150.0	125.3	138.7	125.3	125.7	-	-	-	-
114.0	125.3	150.0	125.3	150.0	125.3	146.7	125.3	129.8	117.3	117.3	-	-	-	-
120.0	125.3	150.0	125.3	150.0	125.3	138.0	121.9	121.9	110.0	110.0	-	-	-	-

Approved as complying with the Florida Building Code
Date 03/31/11
NOA# 10.0209.13
Miami Dade Product Control
By Ishaq I. Chanda

WinDoor INCORPORATED
7500 AMSTERDAM DRIVE
ORLANDO, FL 32832
Phone: 407.481.8400
Fax: 407.481.0505
www.windoorinc.com

8100 SERIES SMI
REINFORCED & NON-REINFORCED
DESIGN PRESSURE CHARTS

DRAWN:	DWG NO.	REV
TJH	08-00878	B
SCALE NTS	DATE 12/03/09	SHEET 7 OF 26

Luis R. Lomas P.E.
Florida No. 62514
3/1/11

A	PER DADE LETTER DATED MAY 06, 2010	09/01/10	R.L.
B	PER LETTERS DATED 5/6/10 & 9/29/10	12/09/10	R.L.

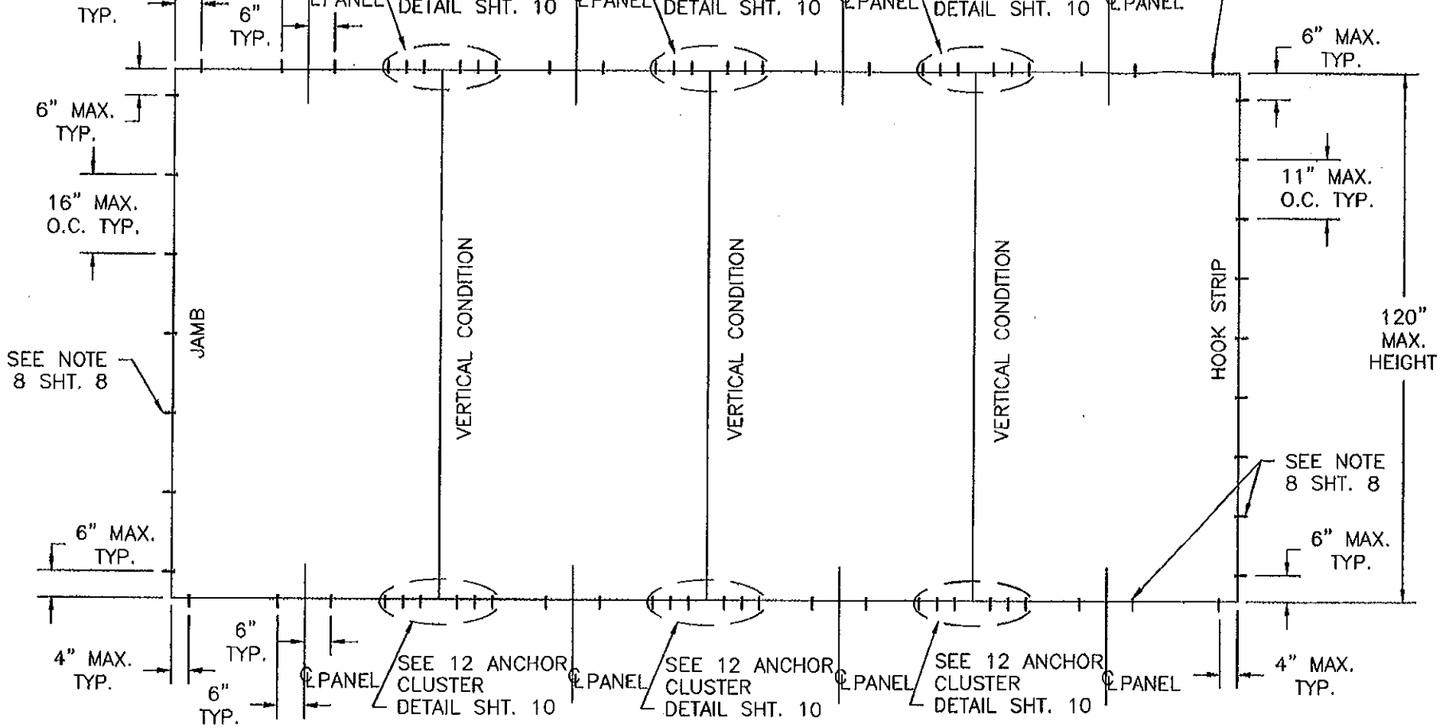

4'0 x 10'0 ANCHORING LAYOUT NON-REINFORCED AND REINFORCED UNITS

4PANEL UNIT SHOWN, APPLICABLE TO ALL CONFIGURATIONS USING SAME ANCHOR CLUSTER AND PATTERN

NUMBER OF ANCHOR LOCATIONS AT HOOKSTRIP

Height (in)	Single Panel Width (in)						
	24.0	30.0	36.0	42.0	48.0	54.0	60.0
80.0	8	8	8	8	8	8	8
84.0	8	8	8	8	8	8	8
96.0	9	9	9	9	9	9	9
98.0	9	9	9	9	9	9	9
108.0	10	10	10	10	10	-	-
114.0	11	11	11	11	11	-	-
120.0	11	11	11	11	11	-	-

NUMBER OF ANCHOR LOCATIONS AT JAMBS

Height (in)	Single Panel Width (in)						
	24.0	30.0	36.0	42.0	48.0	54.0	60.0
80.0	6	6	6	6	6	6	6
84.0	6	6	6	6	6	6	6
96.0	7	7	7	7	7	7	7
98.0	7	7	7	7	7	7	7
108.0	7	7	7	7	7	-	-
114.0	8	8	8	8	8	-	-
120.0	8	8	8	8	8	-	-

ANCHORING NOTES:

1) ALL FRAME SYSTEMS, 2 TRACK, 3 TRACK AND 4 TRACK, HAVE TWO ANCHORS AT EACH LOCATION SHOWN IN HEAD, SILL AND JAMBS.
2) ALL FRAME SYSTEMS, 2 TRACK, 3 TRACK AND 4 TRACK, HAVE ONE ANCHOR AT EACH LOCATION IN HOOK STRIP.
3) FOR ANCHORING INTO MASONRY/CONCRETE THROUGH A PROPERLY SECURED 1X NON-STRUCTURAL WOOD BUCK USE 1/4" ITW TAPCON WITH SUFFICIENT LENGTH TO ACHIEVE A 1 1/4" MINIMUM EMBEDMENT INTO SUBSTRATE WITH 2 1/2" MINIMUM EDGE DISTANCE AND 2 3/8" MINIMUM SEPARATION. LOCATE ANCHORS AS SHOWN IN ELEVATIONS AND INSTALLATION DETAILS.
4) FOR ANCHORING INTO WOOD FRAMING, 2X BUCK OR 2X WOOD BACKED 20 GA. MINIMUM STEEL STUD USE #14 WOOD SCREW WITH SUFFICIENT LENGTH TO ACHIEVE A 1 5/8" MINIMUM EMBEDMENT INTO SUBSTRATE. LOCATE ANCHORS AS SHOWN IN ELEVATIONS AND INSTALLATION DETAILS.
5) SHIM AS REQUIRED AT EACH INSTALLATION ANCHOR WITH LOAD BEARING SHIM. SHIM WHERE SPACE OF 1/16" OR GREATER OCCURS. MAXIMUM ALLOWABLE LOAD BEARING SHIM TO BE 1/4".
6) ALL FASTENERS TO BE CORROSION RESISTANT.
7) INSTALLATION ANCHORS SHALL BE INSTALLED IN ACCORDANCE WITH ANCHOR MANUFACTURER'S INSTALLATION INSTRUCTIONS, AND ANCHORS SHALL NOT BE USED IN SUBSTRATES WITH STRENGTHS LESS THAN THE MINIMUM STRENGTH SPECIFIED BELOW:
   A. WOOD - MINIMUM SPECIFIC GRAVITY OF G=0.42
   B. CONCRETE -- MINIMUM COMPRESSIVE STRENGTH OF 2,700 PSI.
   C. MASONRY - STRENGTH CONFORMANCE TO ASTM C-90, GRADE N, TYPE 1 (OR GREATER).
   D. METAL FRAMING - 20 GA (.040) MINIMUM THICKNESS WITH 2X WOOD BACKING.
8) THERE ARE TWO (2) INSTALLATION ANCHORS AT EACH ANCHOR LOCATION IN HEAD, SILL AND JAMBS. THERE IS ONLY ONE (1) INSTALLATION ANCHOR AT EACH ANCHOR LOCATION IN HOOK STRIP.

PRODUCT REVISED
as complying with the Florida Building Code
Acceptance No. 12-0130.14
Expiration Date 3/31/16
By Ischeryl Chandler
Miami Dade Product Control

Approved as complying with the Florida Building Code
Date 03/31/11
NOA# 10-0609.13
Miami Dade Product Control
By Ischeryl Chandler

WinDoor INCORPORATED
7500 AMSTERDAM DRIVE
ORLANDO, FL 32832
Phone: 407.481.8400
Fax: 407.481.0505
www.windoorinc.com

8100 SERIES SMI
REINFORCED & NON-REINFORCED
4'0 x 10'0 ANCHORING LAYOUT AND NOTES

DRAWN:	DWG NO.	REV
TJH	08-00878	B
SCALE NTS	DATE 12/03/09	SHEET 8 OF 26

Luis R. Lomas P.E.
Florida No. 62514
STATE OF
3/31/11

REV	DESCRIPTION	DATE	APPROVED
A	PER DADE LETTER DATED MAY 06, 2010	09/01/10	R.L.
B	PER LETTERS DATED 5/6/10 & 9/29/10	12/09/10	R.L.

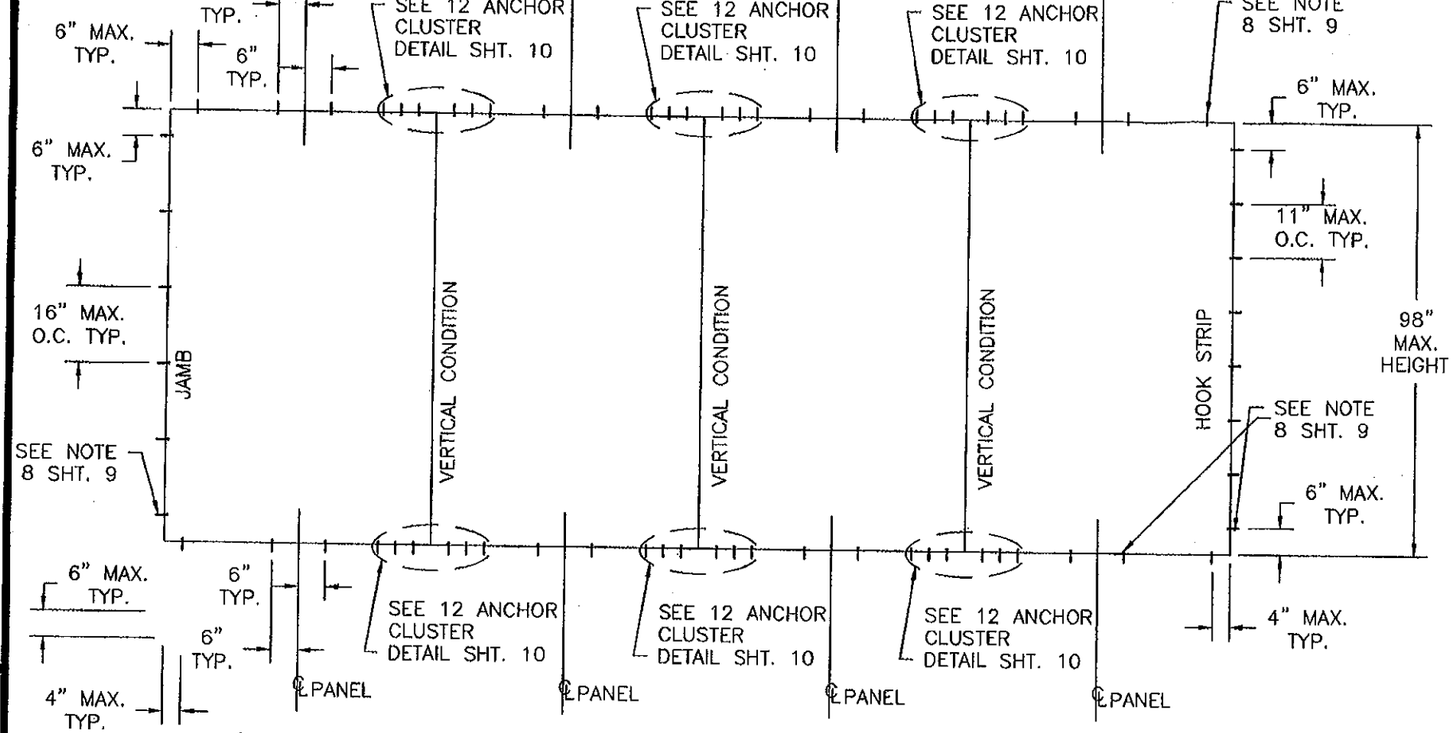

5'0 x 8'2 ANCHORING LAYOUT NON-REINFORCED AND REINFORCED UNITS

4PANEL UNIT SHOWN, APPLICABLE TO ALL CONFIGURATIONS USING SAME ANCHOR CLUSTER AND PATTERN

NUMBER OF ANCHOR LOCATIONS AT HOOKSTRIP

Height (In)	Single Panel Width (In)						
	24.0	30.0	36.0	42.0	48.0	54.0	60.0
80.0	8	8	8	8	8	8	8
84.0	8	8	8	8	8	8	8
96.0	9	9	9	9	9	9	9
98.0	9	9	9	9	9	9	9
108.0	10	10	10	10	10	-	-
114.0	11	11	11	11	11	-	-
120.0	11	11	11	11	11	-	-

NUMBER OF ANCHOR LOCATIONS AT JAMBS

Height (In)	Single Panel Width (In)						
	24.0	30.0	36.0	42.0	48.0	54.0	60.0
80.0	6	6	6	6	6	6	6
84.0	6	6	6	6	6	6	6
96.0	7	7	7	7	7	7	7
98.0	7	7	7	7	7	7	7
108.0	7	7	7	7	7	-	-
114.0	8	8	8	8	8	-	-
120.0	8	8	8	8	8	-	-

PRODUCT REVIEWED as complying with the Florida Building Code
Acceptance No. 12-0130.14
Expiration Date 3/31/16
By Ishaq I. Chaudhary
Miami Dade Product Control

ANCHORING NOTES:

1) ALL FRAME SYSTEMS, 2 TRACK, 3 TRACK AND 4 TRACK, HAVE TWO ANCHORS AT EACH LOCATION SHOWN IN HEAD, SILL AND JAMBS.
2) ALL FRAME SYSTEMS, 2 TRACK, 3 TRACK AND 4 TRACK, HAVE ONE ANCHOR AT EACH LOCATION IN HOOK STRIP.
3) FOR ANCHORING INTO MASONRY/CONCRETE THROUGH A PROPERLY SECURED 1X NON-STRUCTURAL WOOD BUCK USE 1/4" ITW TAPCON WITH SUFFICIENT LENGTH TO ACHIEVE A 1 1/4" MINIMUM EMBEDMENT INTO SUBSTRATE WITH 2 1/2" MINIMUM EDGE DISTANCE AND 2 3/8" MINIMUM SEPARATION. LOCATE ANCHORS AS SHOWN IN ELEVATIONS AND INSTALLATION DETAILS.
4) FOR ANCHORING INTO WOOD FRAMING, 2X BUCK OR 2X WOOD BACKED 20 GA. MINIMUM STEEL STUD USE #14 WOOD SCREW WITH SUFFICIENT LENGTH TO ACHIEVE A 1 5/8" MINIMUM EMBEDMENT INTO SUBSTRATE. LOCATE ANCHORS AS SHOWN IN ELEVATIONS AND INSTALLATION DETAILS.
5) SHIM AS REQUIRED AT EACH INSTALLATION ANCHOR WITH LOAD BEARING SHIM. SHIM WHERE SPACE OF 1/16" OR GREATER OCCURS. MAXIMUM ALLOWABLE LOAD BEARING SHIM TO BE 1/4".
6) ALL FASTENERS TO BE CORROSION RESISTANT.
7) INSTALLATION ANCHORS SHALL BE INSTALLED IN ACCORDANCE WITH ANCHOR MANUFACTURER'S INSTALLATION INSTRUCTIONS, AND ANCHORS SHALL NOT BE USED IN SUBSTRATES WITH STRENGTHS LESS THAN THE MINIMUM STRENGTH SPECIFIED BELOW:
   A. WOOD - MINIMUM SPECIFIC GRAVITY OF G=0.42
   B. CONCRETE - MINIMUM COMPRESSIVE STRENGTH OF 2,700 PSI.
   C. MASONRY - STRENGTH CONFORMANCE TO ASTM C-90, GRADE N, TYPE 1 (OR GREATER).
   D. METAL FRAMING - 20 GA (.040) MINIMUM THICKNESS WITH 2X WOOD BACKING.
8) THERE ARE TWO (2) INSTALLATION ANCHORS AT EACH ANCHOR LOCATION IN HEAD, SILL AND JAMBS. THERE IS ONLY ONE (1) INSTALLATION ANCHOR AT EACH ANCHOR LOCATION IN HOOK STRIP.

Approved as complying with the Florida Building Code
Date 03/31/11
NOA# 10-0209.13
Miami Dade Product Control
By Ishaq I. Chaudhary

WinDoor INCORPORATED
7500 AMSTERDAM DRIVE
ORLANDO, FL 32832
Phone: 407.481.8400
Fax: 407.481.0505
www.windoorinc.com

8100 SERIES SMI
REINFORCED & NON-REINFORCED
5'0 x 8'2 ANCHORING LAYOUT

DRAWN:	DWG NO.	REV
TJH	08-00878	B
SCALE NTS	DATE 12/03/09	SHEET 9 OF 26

STATE OF FLORIDA
Luis R. Lomas P.E.
Florida No. 62514

A	PER DADE LETTER DATED MAY 06, 2010	09/01/10	R.L.
B	PER LETTERS DATED 5/6/10 & 9/29/10	12/09/10	R.L.

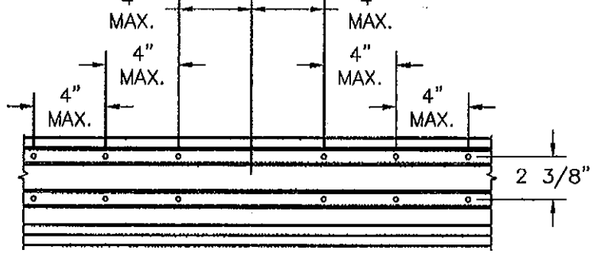

CLUSTER DETAIL
2-TRACK SYSTEM

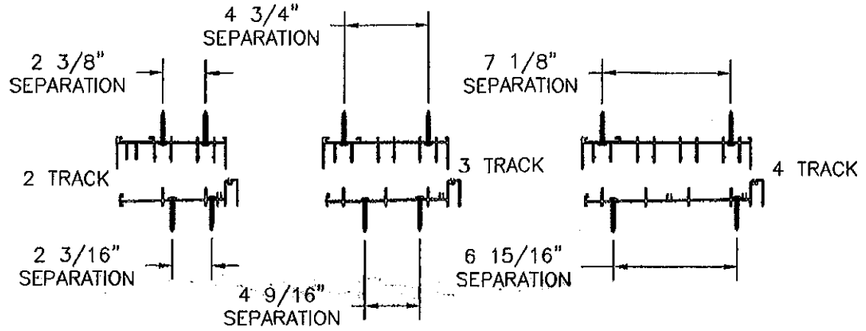

HEAD & SILL ANCHOR LOCATIONS
SEE DETAILS IN SHEETS 17, 18 AND 19

HOOKSTRIP ANCHOR LOCATIONS
SEE DETAILS IN SHEET 20

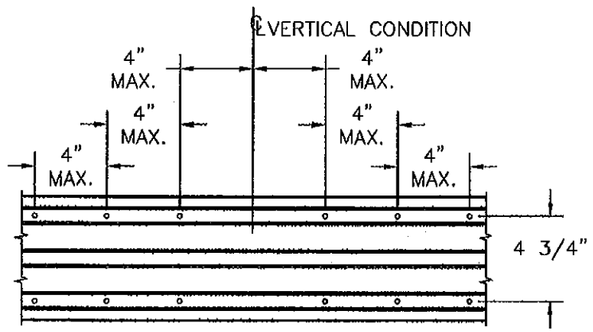

CLUSTER DETAIL
3-TRACK SYSTEM

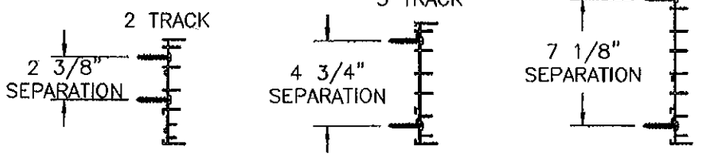

JAMB ANCHOR LOCATIONS
SEE DETAILS IN SHEETS 17, 18 AND 19

PANEL CONSTRUCTION:
ALL PANELS ARE CONSTRUCTED FROM EXTRUDED 6063-T6 ALUMINUM. VERTICAL STILES ARE NOTCHED TO RECEIVE HORIZONTAL RAILS. EACH RAIL IS SECURED TO STILES WITH (3) #10 x 1 1/4" SQ. DRIVE SCREW AT EACH END, ITEM #47. ALL PANELS HAVE AN INTERIOR AND EXTERIOR APPLIED GLAZING STOP.

FRAME CONSTRUCTION:
EACH FRAME CORNER IS NOTCHED AND BUTTED. HEAD AND SILL ARE SECURED TO JAMBS WITH #7 TYPE A SS SCREW, ITEM #48, (2) AT EACH CORNER ON 2 TRACK, (2) AT 3 TRACK FRAME AND (3) AT EACH CORNER ON 4 TRACK FRAME.

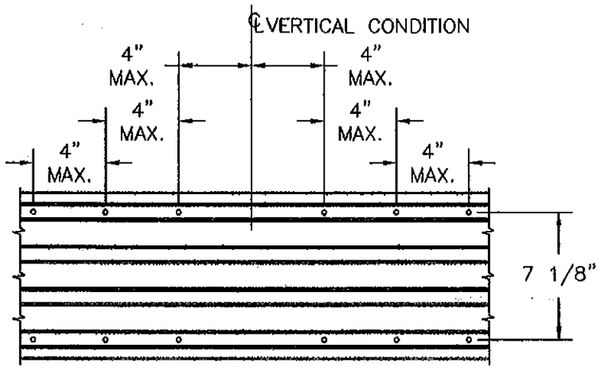

CLUSTER DETAIL
4-TRACK SYSTEM

ADDITIONALLY
NOTE: MINIMUM (2) ANCHORS IN PAIR REQUIRED AT EACH SIDE OF CENTERLINE OF EACH PANEL.

PRODUCT REVISED
as complying with the Florida Building Code
Acceptance No. 12-0130.14
Expiration Date 3/31/16
By Luis L. Lomas Jr
Miami Dade Product Control

Approved as complying with the Florida Building Code
Date 08/31/11
NOA# 10-0209.13
Miami Dade Product Control
By Luis L. Lomas Jr

WinDoor INCORPORATED
7500 AMSTERDAM DRIVE
ORLANDO, FL 32832
Phone: 407.481.8400
Fax: 407.481.0505
www.windoorinc.com

8100 SERIES SMI
REINFORCED & NON-REINFORCED
ANCHORING DETAILS AND NOTES

DRAWN:	DWG NO.	REV
TJH	08-00878	B
SCALE NTS	DATE 12/03/09	SHEET 10 OF 26

Luis R. Lomas P.E.
Florida (No.) 62514
8/31/11 (1)

1		2 TRACK WS FRAME HEAD	KEYMARK	ALUMINUM 6063-T6
2	FS-04788	2 TRACK WS FRAME JAMB	KEYMARK	ALUMINUM 6063-T6
3	S-44119	2 TRACK NSWS SILL PAN	KEYMARK	ALUMINUM 6063-T6
4	S-44121	2 TRACK WS SILL INSERT	KEYMARK	ALUMINUM 6063-T6
5		NOT USED		
6		NOT USED		
7	FS-02180	3 TRACK FRAME HEAD	KEYMARK	ALUMINUM 6063-T6
8	FS-02181	3 TRACK FRAME JAMB	KEYMARK	ALUMINUM 6063-T6
9	S-44123	3 TRACK SILL PAN	KEYMARK	ALUMINUM 6063-T6
10	S-44117	3 TRACK SILL INSERT	KEYMARK	ALUMINUM 6063-T6
11	FS-02071	4 TRACK FRAME HEAD	KEYMARK	ALUMINUM 6063-T6
12	FS-02070	4 TRACK FRAME JAMB	KEYMARK	ALUMINUM 6063-T6
13	S-44118	4 TRACK SILL PAN	KEYMARK	ALUMINUM 6063-T6
14	S-22124	4 TRACK SILL INSERT	KEYMARK	ALUMINUM 6063-T6
15	FS-01882	FRAME HEAD INSERT	KEYMARK	ALUMINUM 6063-T6
16	FS-01883	FRAME JAMB INSERT	KEYMARK	ALUMINUM 6063-T6
17	FH-01869	TOP RAIL	KEYMARK	ALUMINUM 6063-T6
18	FH-04723	BOTTOM RAIL	KEYMARK	ALUMINUM 6063-T6
19	FS-04766	TALL BOTTOM RAIL	KEYMARK	ALUMINUM 6063-T6
20	NPG	PANEL GUIDE		NYLON
21	FH-01871	LOCK STILE	KEYMARK	ALUMINUM 6063-T6
22	FH-05044	INTERLOCK STILE	KEYMARK	ALUMINUM 6063-T6
23	FH-04767	FEMALE BUTT STILE EXT. OFFSET	KEYMARK	ALUMINUM 6063-T6
24	FH-04750	MALE BUTT STILE EXT. OFFSET	KEYMARK	ALUMINUM 6063-T6
25	FH-04826	FEMALE BUTT STILE INT. OFFSET	KEYMARK	ALUMINUM 6063-T6
26	P7569AM	DUST PAD 1.244" x .5" x 2.34"		
27	FS-04747	BUMPER JAMB INSERT	KEYMARK	ALUMINUM 6063-T6
28	FS-04754	PLAIN STILE INTERLOCK	KEYMARK	ALUMINUM 6063-T6
29	FS-04755	PLAIN STILE INTERLOCK COVER	KEYMARK	ALUMINUM 6063-T6
30	FS-05382	INTERLOCK SNAP COVER	KEYMARK	ALUMINUM 6063-T6
31	FS-02726	STILE JAMB INSERT	KEYMARK	ALUMINUM 6063-T6
32	FS-02726	PANEL STILE JAMB INSERT	KEYMARK	ALUMINUM 6063-T6
33	FH-03693	1 3/4" SILL RISER	KEYMARK	ALUMINUM 6063-T6
34	FH-03652	2 1/4" SILL RISER	KEYMARK	ALUMINUM 6063-T6
35	FH-03653	3" SILL RISER	KEYMARK	ALUMINUM 6063-T6
36	FH-03654	3 1/2" SILL RISER	KEYMARK	ALUMINUM 6063-T6
37	FH-03655	4 1/4" SILL RISER	KEYMARK	ALUMINUM 6063-T6
38	FS-02173	HOOK STRIP	KEYMARK	ALUMINUM 6063-T6
39	FS-04476	HOOK STRIP WALL COVER	KEYMARK	ALUMINUM 6063-T6
40	FS-04477	HOOK STRIP WALL MOUNT	KEYMARK	ALUMINUM 6063-T6
41	FH-01877	9/16" HORIZONTAL GLASS STOP	KEYMARK	ALUMINUM 6063-T6
42	FH-01878	9/16" VERTICAL GLASS STOP	KEYMARK	ALUMINUM 6063-T6

PARTS LIST CONTINUED ON SHEET 12

REV	DESCRIPTION	DATE	APPROVED
A	PER DADE LETTER DATED MAY 06, 2010	09/01/10	R.L.
B	PER LETTERS DATED 5/6/10 & 9/29/10	12/09/10	R.L.

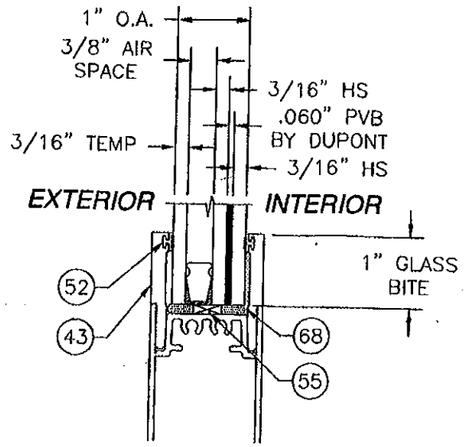

GLAZING TYPE A
SMALL MISSILE IMPACT
REINFORCED & NON-REINFORCED UNITS

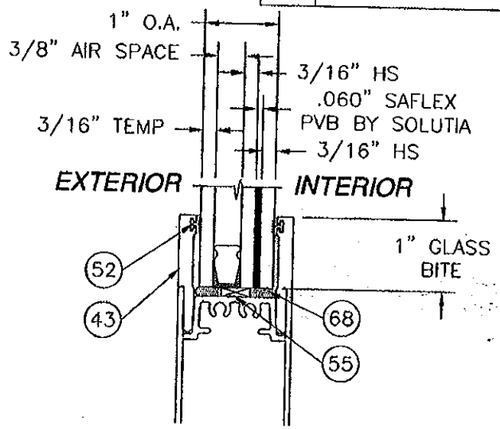

GLAZING TYPE C
SMALL MISSILE IMPACT
REINFORCED & NON-REINFORCED UNITS

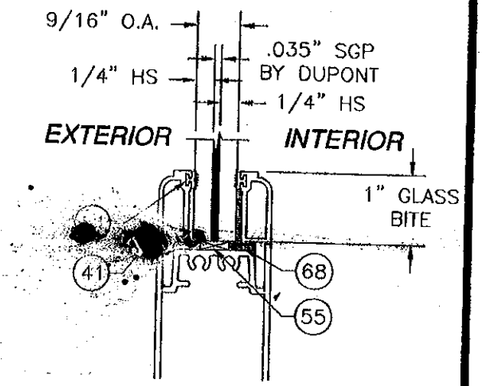

GLAZING TYPE E
SMALL MISSILE IMPACT
REINFORCED & NON-REINFORCED UNITS

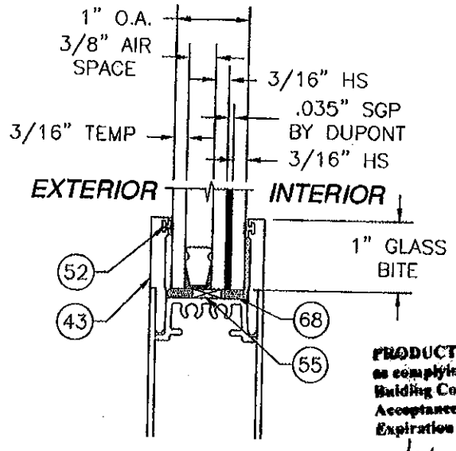

GLAZING TYPE B
SMALL MISSILE IMPACT
REINFORCED & NON-REINFORCED UNITS

PRODUCT REVISED
as complying with the Florida Building Code
Acceptance No. 12-0130.14
Expiration Date 3/2/16
By Ichaz L. Chanda
Miami Dade Product Control

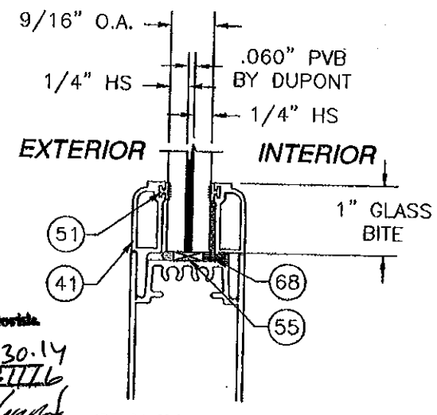

GLAZING TYPE D
SMALL MISSILE IMPACT
REINFORCED & NON-REINFORCED UNITS

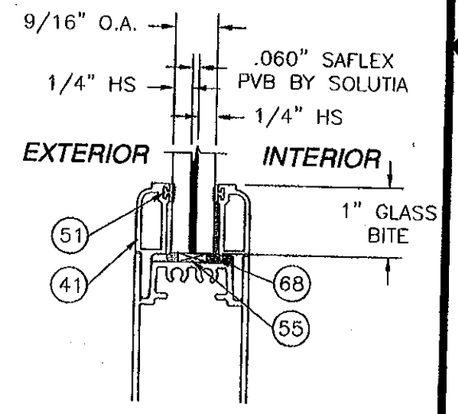

GLAZING TYPE F
SMALL MISSILE IMPACT
REINFORCED & NON-REINFORCED UNITS

Approved as complying with the Florida Building Code
Date 03/31/11
NOA# 10-0628.13
Miami Dade Product Control
By Ichaz L. Chanda

WinDoor INCORPORATED
7500 AMSTERDAM DRIVE
ORLANDO, FL 32832
Phone: 407.481.8400
Fax: 407.481.0505
www.windoorinc.com

8100 SERIES SMI
REINFORCED & NON-REINFORCED
B.O.M. & REINFORCED GLAZING DETAILS

DRAWN:	DWG NO.	REV
TJH	08-00878	B
SCALE NTS	DATE 12/03/09	SHEET 11 OF 26

Luis R. Lomas P.E.
Florida No. 62514
3/1/11

43	FS-01879	1" HORIZONTAL GLASS STOP	KEYMARK	ALUMINUM 6063-T6
44	FS-01880	1" VERTICAL GLASS STOP	KEYMARK	ALUMINUM 6063-T6
45	FH-02642	6000 BUTT STILE REINFORCING BAR	KEYMARK	ALUMINUM 6063-T6
46	FH-05045	INTERLOCK REINFORCING BAR	KEYMARK	ALUMINUM 6063-T6
47	FH-03916	FEMALE BUTT STILE REINFORCING BAR	KEYMARK	ALUMINUM 6063-T6
48	FS-02210	FRAME HEAD COVER	KEYMARK	ALUMINUM 6063-T6
49	FS-02208	SILL COVER	KEYMARK	ALUMINUM 6063-T6
50		SCREEN SPLINE		
51	TP~~983~~ /051	9/16" GLAZING VINYL		VINYL
52	TP1051	1" GLAZING VINYL		VINYL
53	#1988-9000	TANDEM ROLLER		
54	2468	DUAL POINT MORTISE LOCK & KEEPER		
55	TP990	GLASS SETTING BLOCK		
56	TP876	INTERLOCK BUMPER		RUBBER
57	W333517K0000	FINSEAL .187 x .350		
58	W332217K0000	FINSEAL .187 x .240		
59	W231417K0000	FINSEAL .187 x .140		
60	131017	#8 x 1/2" PH TEK SCREW		
61	S-44115	2 TRACK NS INSERT		
62	131018	#8 x 3/8" PH TYPE B SS		18-8 SS
63	131004	#10 x 1 1/4" TYPE F SS		
64	131020	#7 x 5/8' PH TYPE A SS		410 SS
65	131011	#8 x 2" FH TEK SCREW		410 SS
66	131009	#10 x 3/4" FH TEK SCREW		410 SS
67	LCS068-N5	SNAP IN SILL GATE		PLASTIC
68	SIKAFAST 552	GLAZING COMPOUND	SIKA	URETHANE
69		NOT USED		
70	S-44120	2 TRACK NS/WS RETRO SILL PAN	KEYMARK	ALUMINUM 6063-T6
71		SMI GLAZING SEE SHEETS 11		
72	FH-02727	MT SCREEN TOP/BOTTOM RAIL	KEYMARK	ALUMINUM 6063-T6
73	FH-02728	MT SCREEN STILE	KEYMARK	ALUMINUM 6063-T6
74	FH-02729	MT SCREEN STILE W/SEAL	KEYMARK	ALUMINUM 6063-T6
75	FS-02730	MT SCREEN ASTRAGAL	KEYMARK	ALUMINUM 6063-T6
76	FH-02300	BOX SCREEN TOP/BOTTOM RAIL	KEYMARK	ALUMINUM 6063-T6
77	FH-02395	BOX SCREEN STILE	KEYMARK	ALUMINUM 6063-T6
78	FS-02209	BOX SCREEN SWEEP	KEYMARK	ALUMINUM 6063-T6
79	FS-02650	BOX SCREEN ASTRAGAL	KEYMARK	ALUMINUM 6063-T6
80	7500 A04	SIGNITURE HANDLE SET		
81		NOT USED		
82		NOT USED		
83		#8 x 3/4" PH TEK SCREW		
84		#10 x 3/4" PH TEK SCREW		
85	FS-04791	FIXED PANEL Z-CLIP	KEYMARK	ALUMINUM 6063-T6

FROM SHEET 11

REV	DESCRIPTION	DATE	APPROVED
A	PER DADE LETTER DATED MAY 06, 2010	09/01/10	R.L.
B	PER LETTERS DATED 5/6/10 & 9/29/10	12/09/10	R.L.

OPTIONAL SCREENS

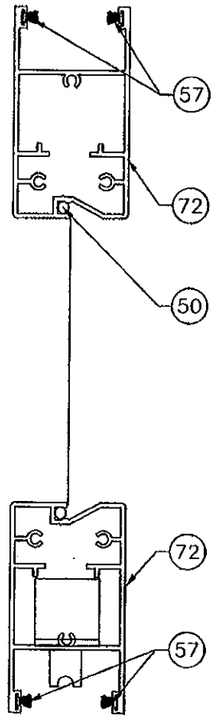

MT SCREEN VERTICAL CROSS SECTION

TO BE USED WITH 2TRACK, 2TRACK RETRO, 3TRACK AND 4TRACK FRAME SYSTEMS

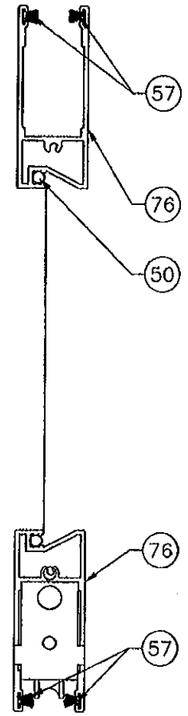

BOX SCREEN VERTICAL CROSS SECTION

TO BE USED WITH 2TRACK WS AND 2TRACK RETRO WS FRAME SYSTEMS

PRODUCT REVISED
as complying with the Florida Building Code
Acceptance No. 12-0130.14
Expiration Date 3/31/16
By Ishaq I. Chanda
Miami Dade Product Control

Approved as complying with the Florida Building Code
Date 03/31/11
NOA# 10-0209.15
Miami Dade Product Control
By Ishaq I. Chanda

WinDoor INCORPORATED
7500 AMSTERDAM DRIVE
ORLANDO, FL 32832
Phone: 407.481.8400
Fax: 407.481.0505
www.windoorinc.com

8100 SERIES SMI
REINFORCED & NON-REINFORCED
B.O.M. & NON-REINFORCED GLAZING DETAILS

DRAWN:	DWG NO.	REV
TJH	08-00878	B
SCALE NTS	DATE 12/03/09	SHEET 12 OF 26

STATE OF FLORIDA
Luis R. Lomas, P.E.
Florida No. 62514
3/31/11

REV	DESCRIPTION	DATE	APPROVED
A	PER DADE LETTER DATED MAY 06, 2010	09/01/10	R.L.
B	PER LETTERS DATED 5/6/10 & 9/29/10	12/09/10	R.L.

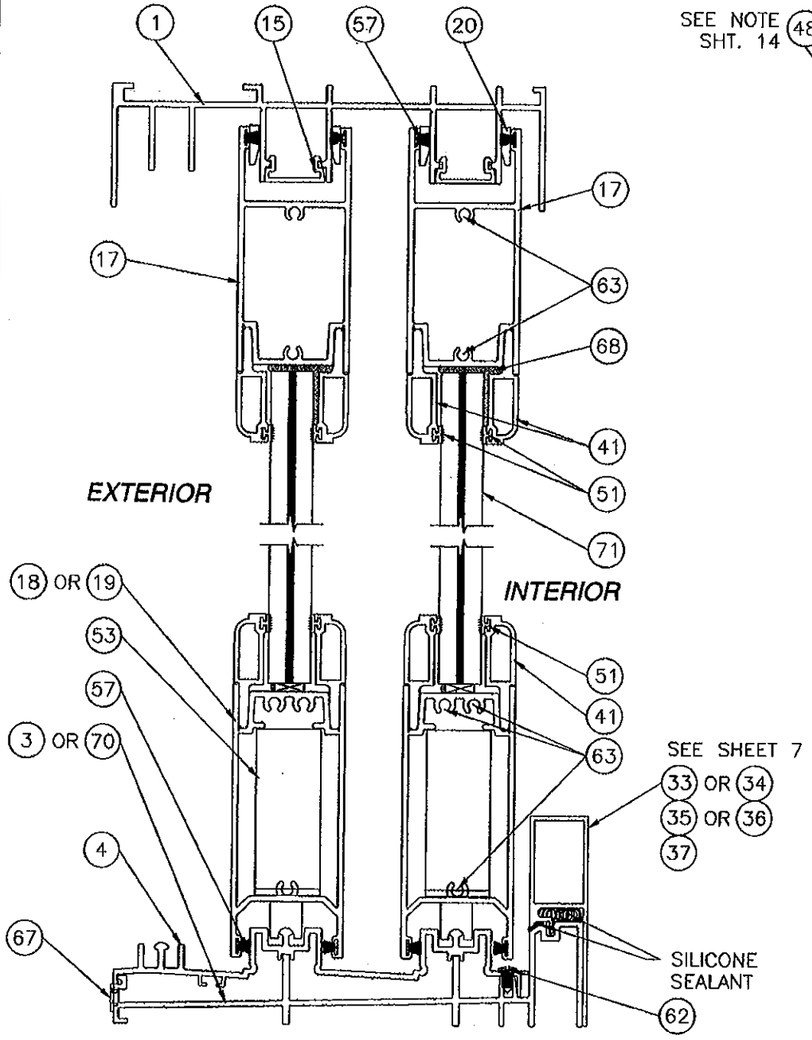

SECTION A

2 TRACK WS FRAME SYSTEM WITH 3" SILL RISER SHOWN, 2 TRACK NS , 2TRACK WS RETRO AND 2TRACK NS RETRO SILLS AND ALL SILL RISERS MAY BE USED. SEE D.P. TABLE SHEET 7

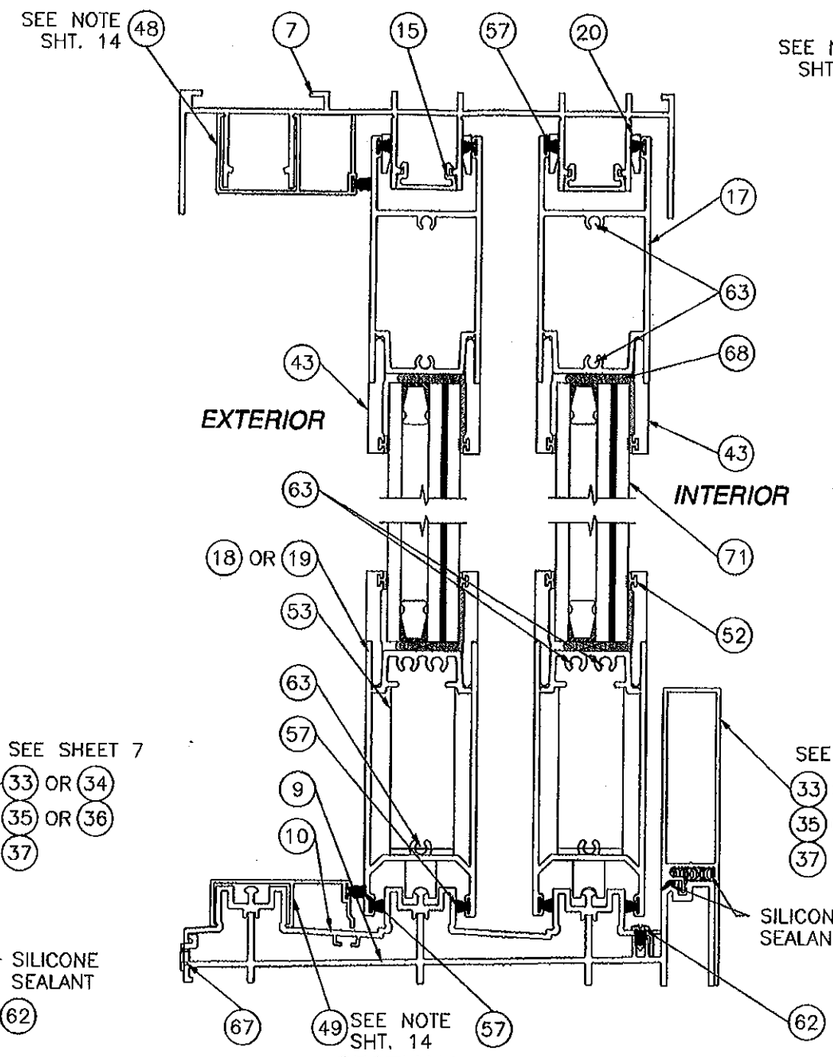

SECTION B

3 TRACK FRAME SYSTEM WITH 4 1/4" SILL RISER SHOWN, ALL SILL RISERS MAY BE USED SEE D.P. TABLE SHEET 7

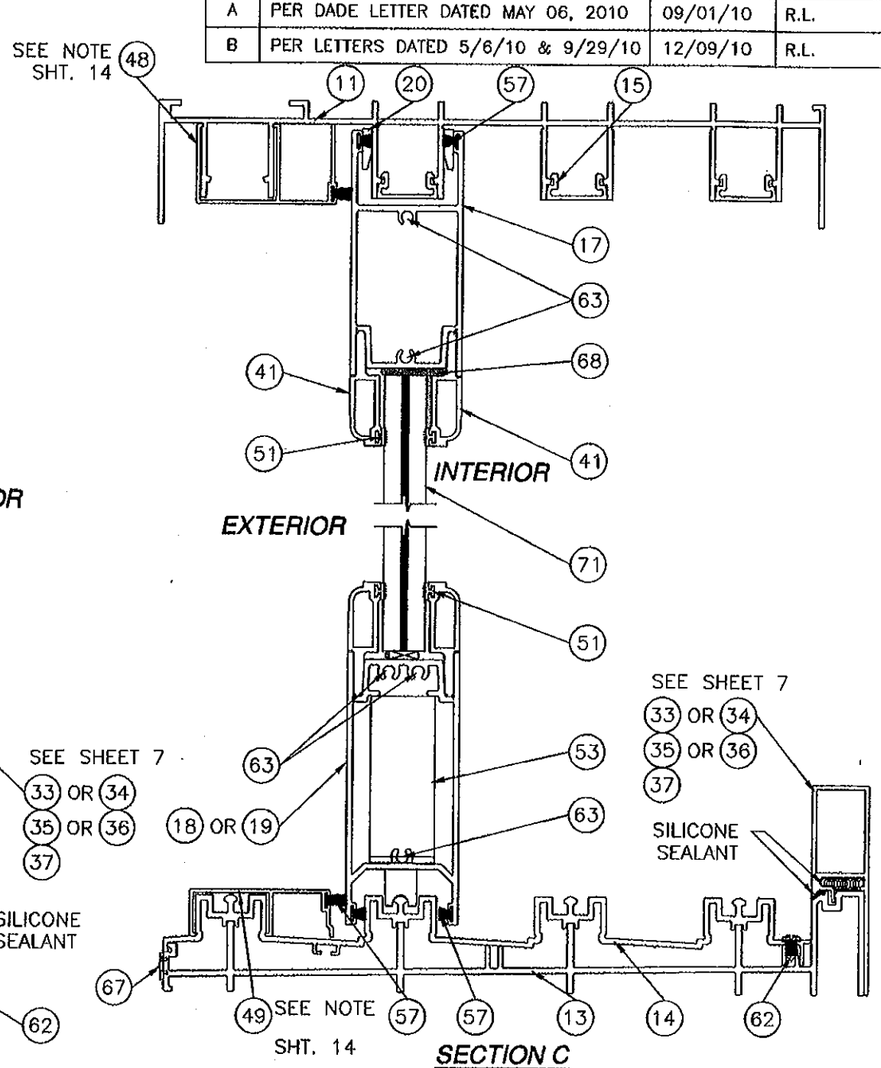

SECTION C

4 TRACK FRAME SYSTEM WITH 3" SILL RISER SHOWN, ALL SILL RISERS MAY BE USED SEE D.P. TABLE SHEET 7

NOTE:
SEE SHEETS 20, 21, 22 AND 23 FOR TYPICAL ANCHORAGE TO VARIOUS SUBSRTATE MATERIALS. A SPECIFIC SUBSTRATE IS INDICATED ON EACH HEAD AND TRACK SYSTEM.

PRODUCT REVISED
as complying with the Florida
Building Code
Acceptance No 12-0130.14
Expiration Date 3/3/16
By Ishas I. Chanda
Miami Dade/Product Control

Approved as complying with the
Florida Building Code
Date 03/31/14
NOA# 13-0209.13
Miami Dade Product Control
By Ishas I. Chanda

WinDoor INCORPORATED
7500 AMSTERDAM DRIVE
ORLANDO, FL 32832
Phone: 407.481.8400
Fax: 407.481.0505
www.windoorinc.com

8100 SERIES SMI
REINFORCED & NON-REINFORCED
VERTICAL CROSS SECTIONS

DRAWN:	DWG NO.	REV
TJH	08-00878	B
SCALE NTS	DATE 12/03/09	SHEET 13 OF 26

3/31/14
Luis R. Lomas P.E.
Florida No. 62514

A	PER DADE LETTER DATED MAY 06, 2010	09/01/10	R.L.
B	PER LETTERS DATED 5/6/10 & 9/29/10	12/09/10	R.L.

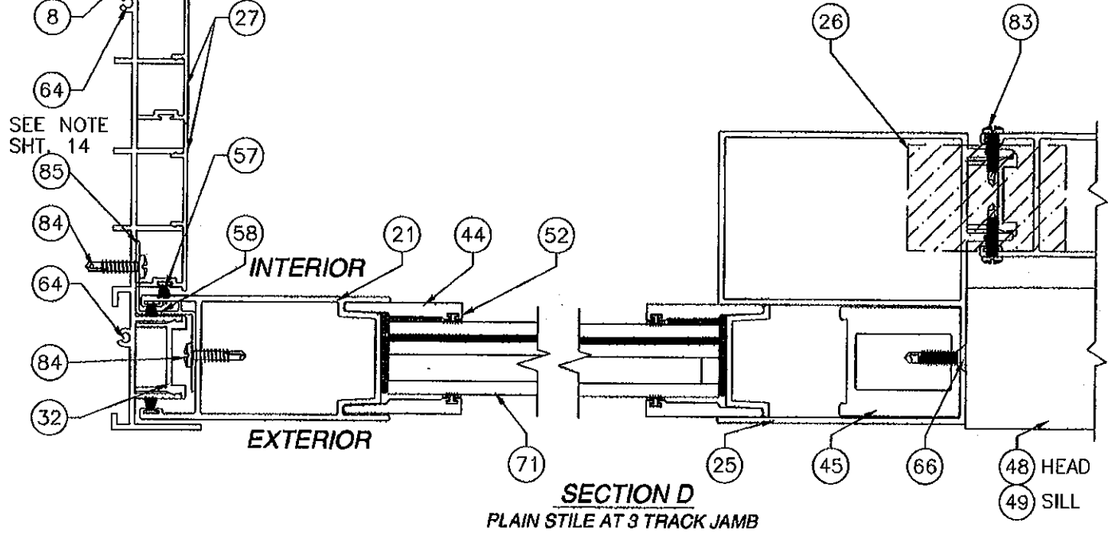

SECTION D
PLAIN STILE AT 3 TRACK JAMB

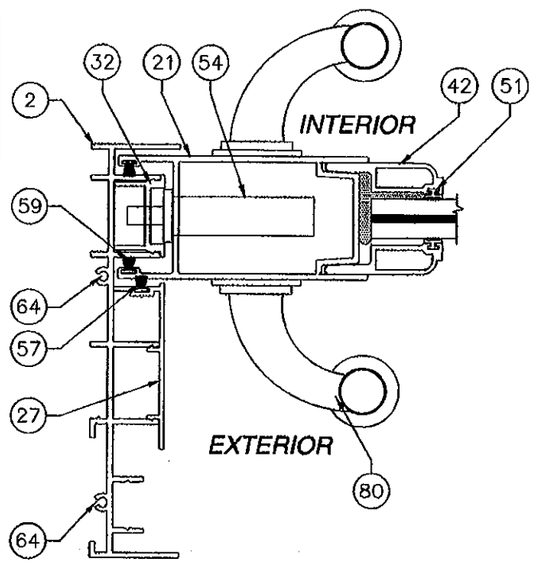

SECTION F
LOCK STILE AT 2 TRACK JAMB

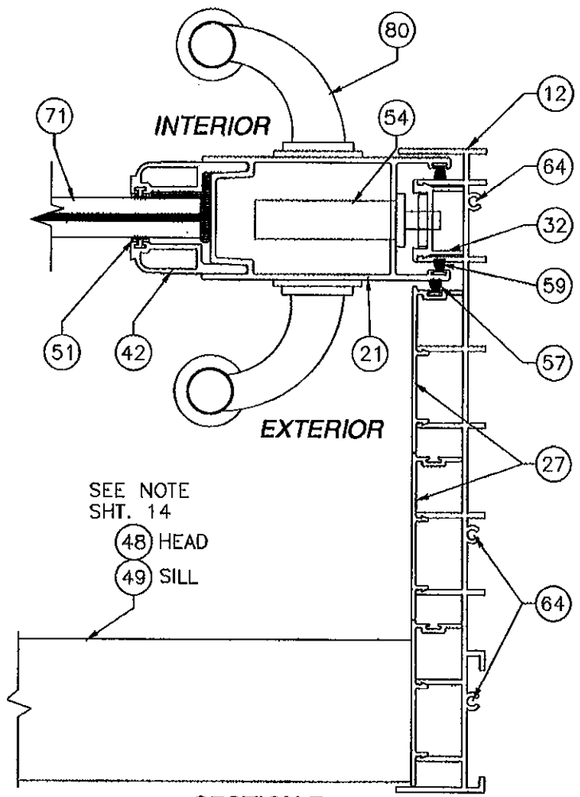

SECTION E
LOCK STILE AT 4 TRACK JAMB

PRODUCT REVISED
as complying with the Florida Building Code
Acceptance No. 12-0130.14
Expiration Date 3/31/16
By [signature]
Miami Dade Product Control

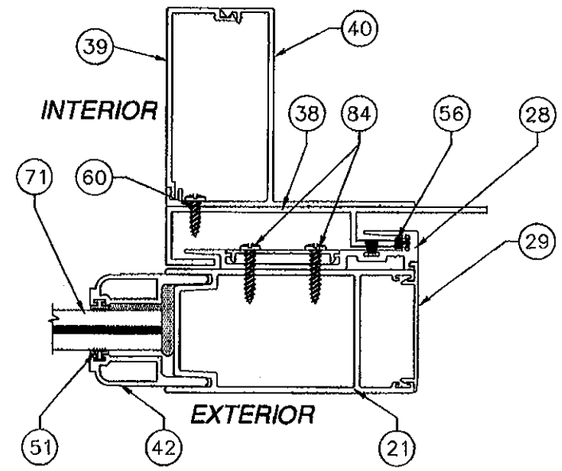

SECTION H
REINFORCED/NON REINFORCED INTERLOCK STILE AT EXTERIOR HOOK STRIP

FIXED PANEL NOTES:

1. FIXED PANEL TO JAMB CONDITION:
   FIXED PANEL IS SEURED TO THE JAMB WTH (2) ITEMS #85, FIXED PANEL Z-CLIP. ONE Z-CLIP IS LOCATED 24" FROM TOP OF THE PANEL DOWN AND 24" FROM BOTTOM OF PANEL, UP. EACH Z-CLIP IS ATTACHED TO PANEL WITH (3) ITEM # 84, #10 x 3/4" PH TEK SCREWS AND THEN IT IS ATTACHED TO JAMB WITH (3) ITEM #84, #10 x 3/4" PH TEK SCREWS. SECTION D SHEET 14, SECTION EE SHEET 18 AND SECTION Z SHEET 18 SHOW A FIXED PANEL TO JAMB CONDITION.
2. FIXED PANEL TO FIXED PANEL CONDITION:
   TWO FIXED PANELS ARE SECURED TOGETHER WITH ITEM #83, #8 x 3/4" PH TEK SCREW. THERE IS A ROW ON THE INTERIOR AND A ROW ON THE EXTERIOR OF THE FIXED PANEL PACED 4" FROM THE TOP AND BOTTOM WITH ONE ADDITIONAL SCREW IN THE CENTER. SECTION D SHEET 14, SECTION DD SHEET 19, SECTION O SHEET 15, SECTION U, SHEET 16 AND SECTION CC SHEET 19 SHOW A FIXED PANEL TO FIXED PANEL CONDITION.

NOTE:
SEE SHEETS 20, 21, 22 AND 23 FOR TYPICAL ANCHORAGE TO VARIOUS SUBSRTATE MATERIALS. A SPECIFIC SUBSTRATE IS INDICATED ON EACH HEAD, SILL AND JAMB TRACK SYSTEM. OTHER HEAD, SILL AND JAMB TRACK SYSTEMS ARE SIMILAR.

Approved as complying with the Florida Building Code
Date 03/31/11
NOA# 10-0209.13
Miami Dade Product Control
By _____

WinDoor INCORPORATED
7500 AMSTERDAM DRIVE
ORLANDO, FL 32832
Phone: 407.481.8400
Fax: 407.481.0505
www.windoorinc.com

8100 SERIES SMI
REINFORCED & NON-REINFORCED
HORIZONTAL CROSS SECTIONS

DRAWN:	DWG NO.	REV
TJH	08-00878	B
SCALE NTS	DATE 12/03/09	SHEET 14 OF 26

3/31/11
Luis R. Lomas P.E.
Florida No. 62514

REVISIONS			
A	PER DADE LETTER DATED MAY 06, 2010	09/01/10	R.L.
B	PER LETTERS DATED 5/6/10 & 9/29/10	12/09/10	R.L.

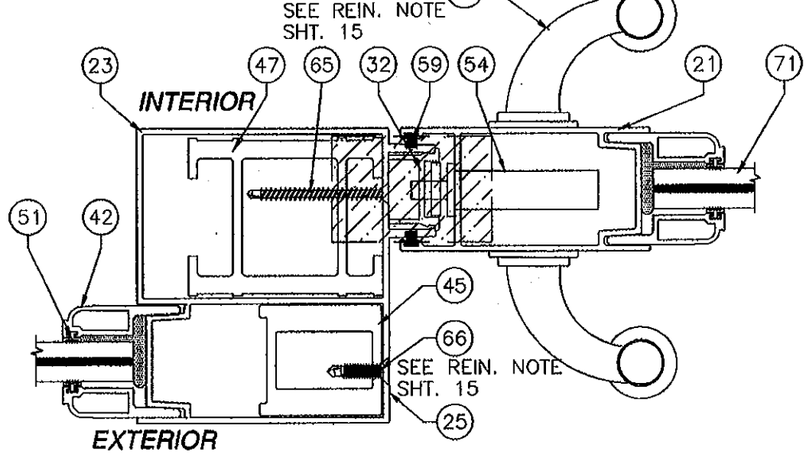

SECTION J

REINFORCED INTERIOR FIXED BUTT STILE TO LOCK STILE

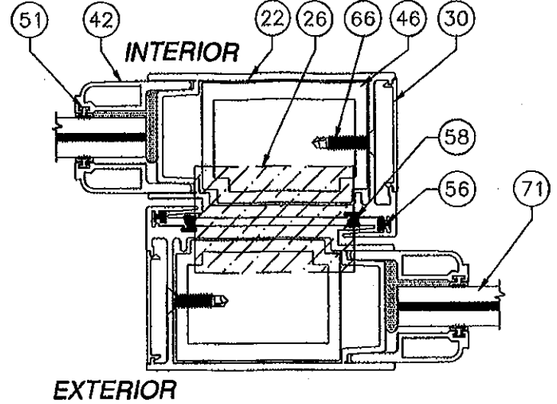

SECTION L

REINFORCED INTERLOCK STILE TO REINFORCED INTERLOCK STILE

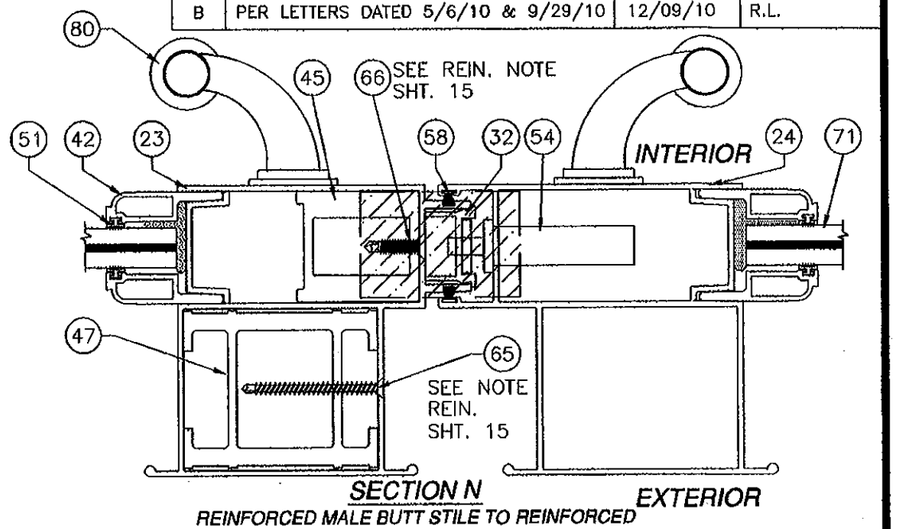

SECTION N

REINFORCED MALE BUTT STILE TO REINFORCED LOCKING BUTT STILE

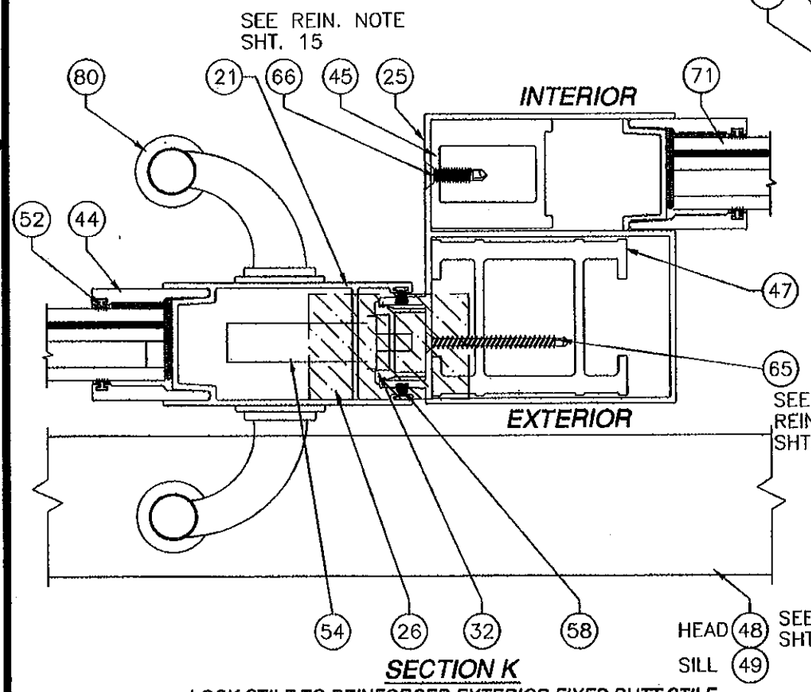

SECTION K

LOCK STILE TO REINFORCED EXTERIOR FIXED BUTT STILE

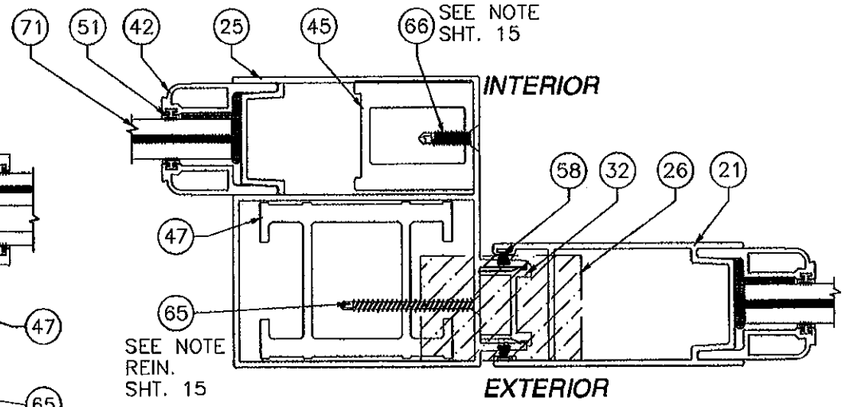

SECTION M

REINFORCED EXTERIOR FIXED BUTT STILE TO PLAIN STILE

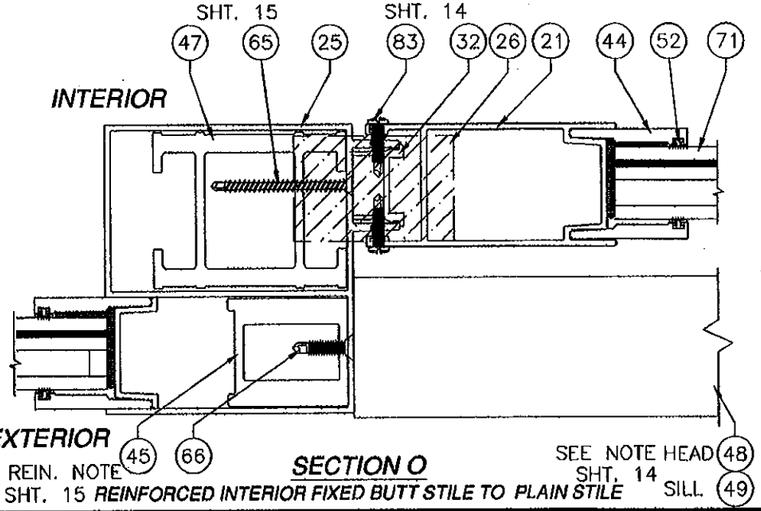

SECTION O

REINFORCED INTERIOR FIXED BUTT STILE TO PLAIN STILE

REINFORCING BAR NOTE:
ITEM #46, INTERLOCK REINFORCING BAR IS SECURED TO INTERLOCK WITH ITEM #66. ITEM #47, FEMALE BUTT STILE REINFORCING BAR IS SECURED TO FEMALE BUTT STILE AND FEMALE BUTT STILE OFFSET WITH ITEM #65. ITEM #45, 6000 BUTT STILE REINFORCING BAR IS SECURED TO FEMALE BUTT STILE AND FEMALE BUTT STILE OFFSET WITH ITEM #66. ALL SCREWS ARE SPACED 6" FROM TOP AND BOTTOM OF STILES AND ONE AT MIDSPAN.

PRODUCT REVISED
as complying with the Florida Building Code
Acceptance No. 12-0130.14
Expiration Date 3/31/16
By Ishaq I. Chanda
Miami Dade Product Control

Approved as complying with the Florida Building Code
Date 03/31/11
NOA# 10-0209.13
Miami Dade Product Control
By Ishaq I. Chanda

WinDoor INCORPORATED
7500 AMSTERDAM DRIVE
ORLANDO, FL 32832
Phone: 407.481.8400
Fax: 407.481.0505
www.windoorinc.com

8100 SERIES SMI
REINFORCED & NON-REINFORCED
HORIZONTAL CROSS SECTIONS

DRAWN:	DWG NO.	REV
TJH	08-00878	B
SCALE NTS	DATE 12/03/09	SHEET 15 OF 26

3/11/11
Luis R. Lomas P.E.
Florida No. 62514

A	PER DADE LETTER DATED MAY 06, 2010	09/01/10	R.L.
B	PER LETTERS DATED 5/6/10 & 9/29/10	12/09/10	R.L.

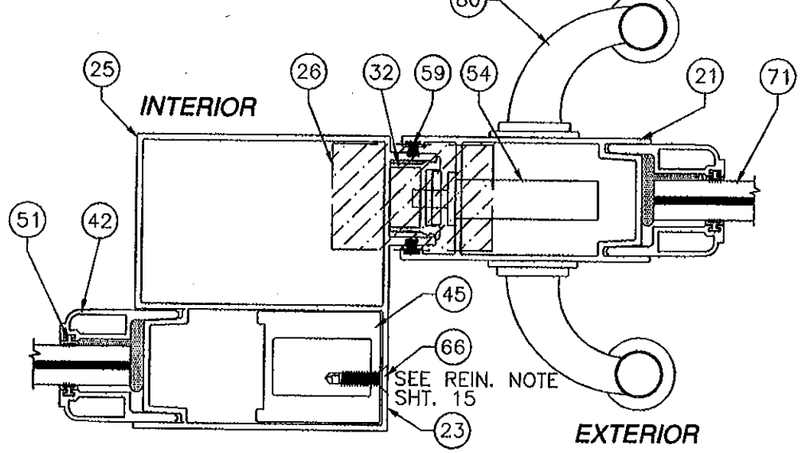

SECTION P

NON-REINFORCED INTERIOR FIXED BUTT STILE TO LOCK STILE

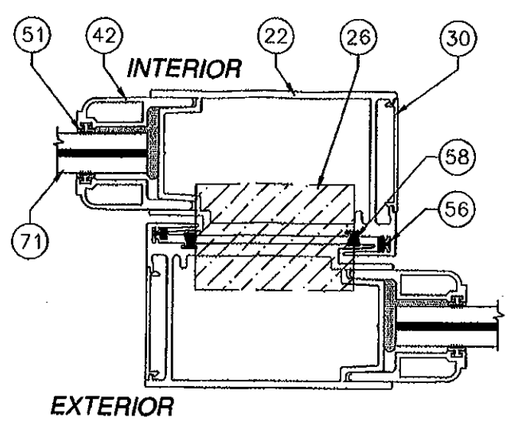

SECTION R

NON-REINFORCED INTERLOCK STILE TO NON-REINFORCED INTERLOCK STILE

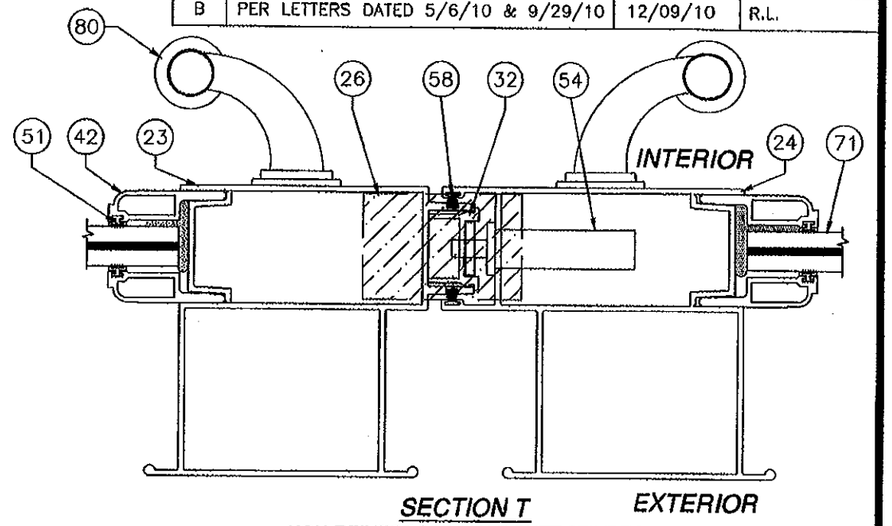

SECTION T

NON-REINFORCED MALE BUTT STILE TO NON-REINFORCED LOCKING BUTT STILE

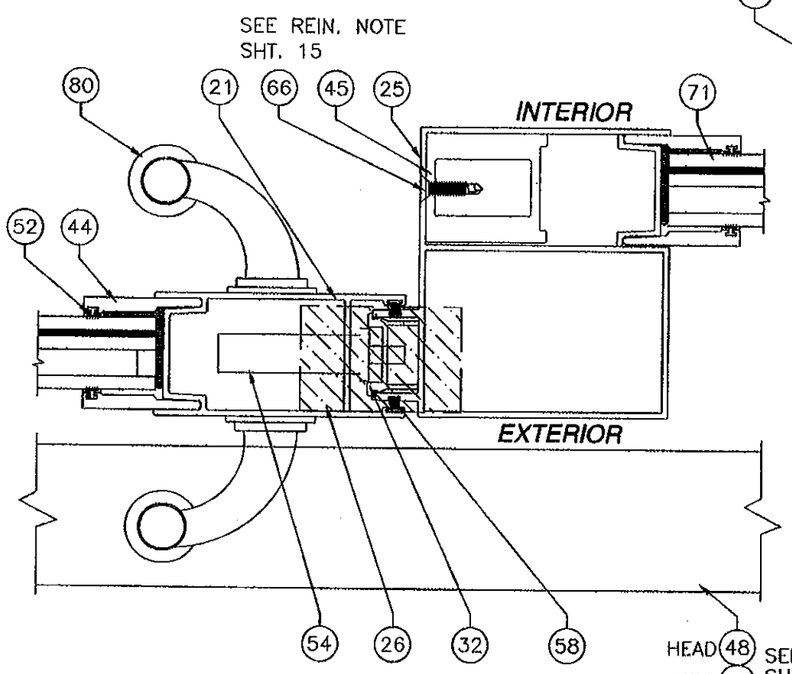

SECTION Q

LOCK STILE TO NON-REINFORCED EXTERIOR FIXED BUTT STILE

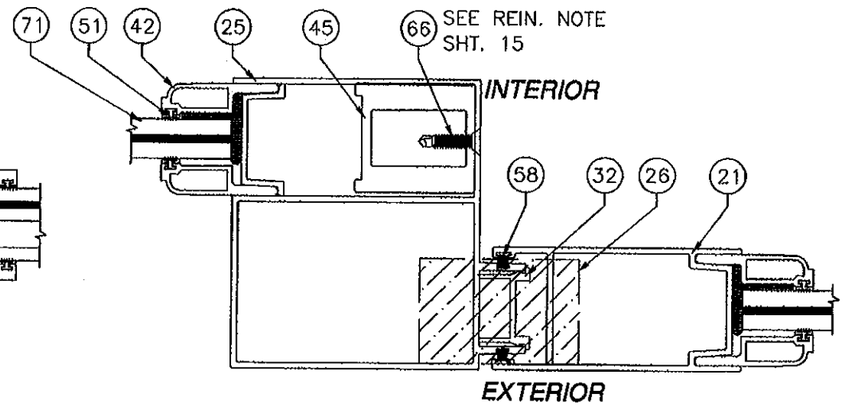

SECTION S

NON-REINFORCED EXTERIOR FIXED BUTT STILE TO PLAIN STILE

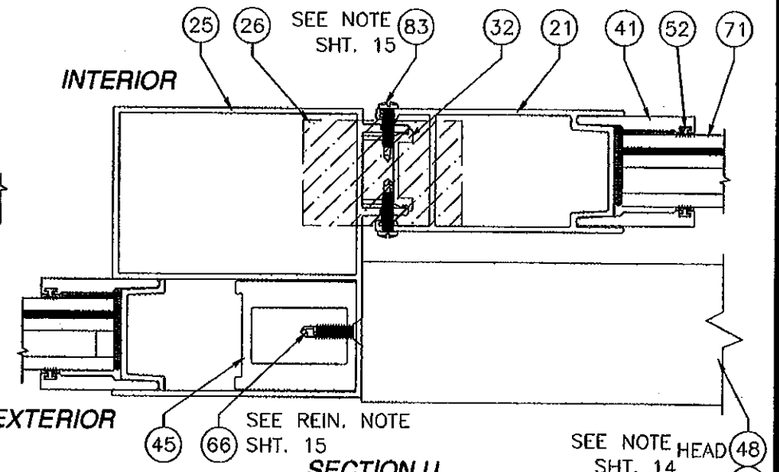

SECTION U

NON-REINFORCED INTERIOR FIXED BUTT STILE TO PLAIN STILE

PRODUCT REVISED
as complying with the Florida Building Code
Acceptance No 12-0130.14
Expiration Date 3/3/11
By Ishaq I. Chanda
Miami Dade Product Control

Approved as complying with the Florida Building Code
Date 03/31/11
NOA# 10-0209.13
Miami Dade Product Control
By Ishaq I. Chanda

WinDoor INCORPORATED
7500 AMSTERDAM DRIVE
ORLANDO, FL 32832
Phone: 407.481.8400
Fax: 407.481.0505
www.windoorinc.com

8100 SERIES SMI
REINFORCED & NON-REINFORCED
HORIZONTAL CROSS SECTIONS

DRAWN:	DWG NO.	REV
TJH	08-00878	B
SCALE NTS	DATE 12/03/09	SHEET 16 OF 26

3/1/11
STATE OF
Luis R. Lomas P.E.
Florida No. 62514

A	PER DADE LETTER DATED MAY 06, 2010	09/01/10	R.L.
B	PER LETTERS DATED 5/6/10 & 9/29/10	12/09/10	R.L.

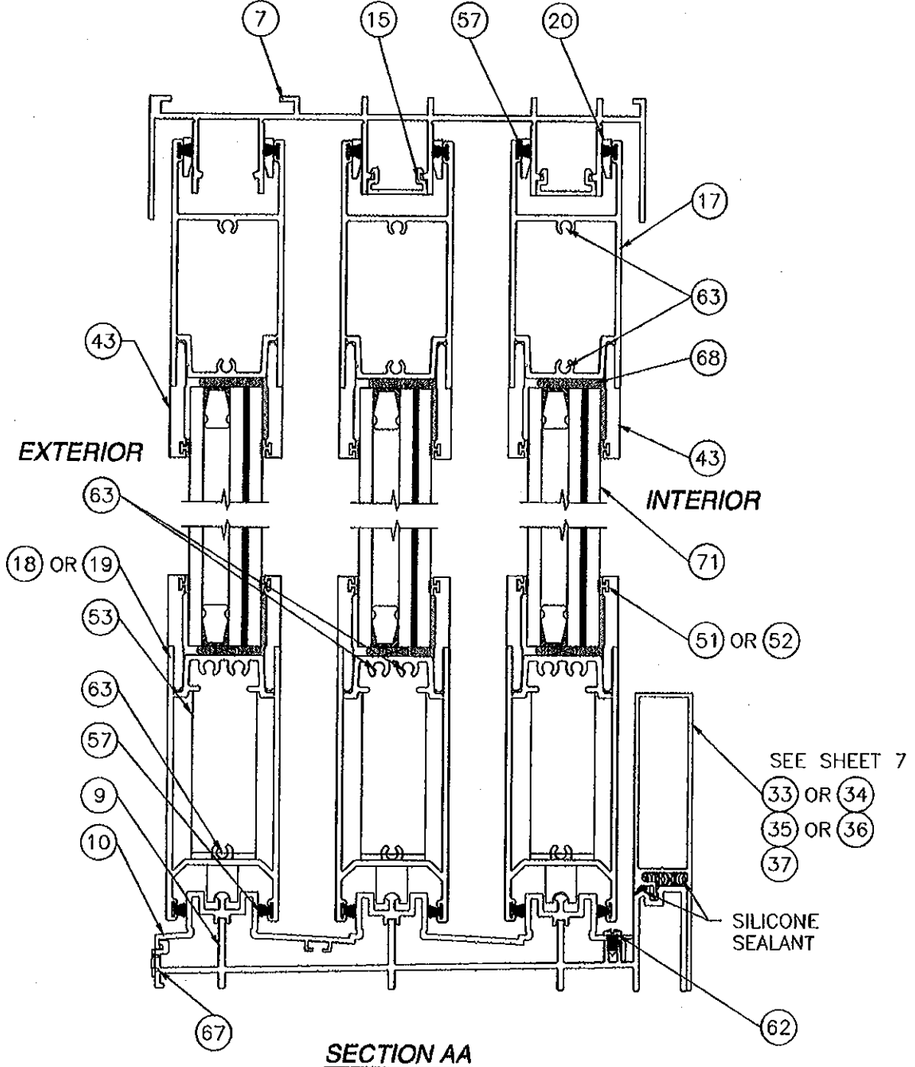

SECTION AA
3 TRACK FRAME SYSTEM
SEE D.P. TABLE SHEET 7

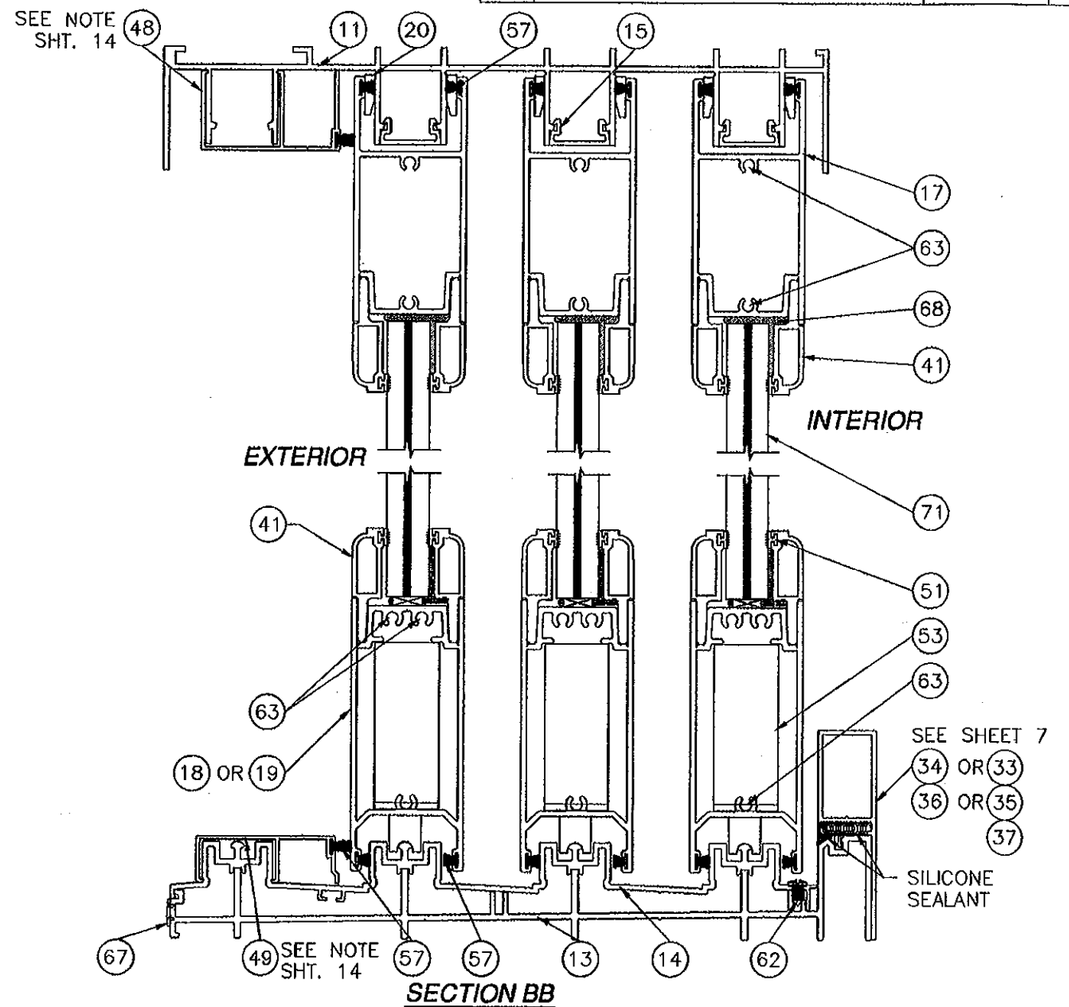

SECTION BB
4 TRACK FRAME SYSTEM
SEE D.P. TABLE SHEET 7

PRODUCT REVISED
as complying with the Florida
Building Code 12-0130.14
Acceptance No
Expiration Date 3/31/16
By Ishaq I. Chanda
Miami Dade Product Control

Approved as complying with the
Florida Building Code
Date 03/31/16
NOA# 10-0209.13
Miami Dade Product Control
By Ishaq I. Chanda

WinDoor INCORPORATED
7500 AMSTERDAM DRIVE
ORLANDO, FL 32832
Phone: 407.481.8400
Fax: 407.481.0505
www.windoorinc.com

8100 SERIES LMI
REINFORCED & NON-REINFORCED
VERTICAL CROSS SECTIONS

DRAWN:	DWG NO.	REV
TJH	08-00878	B
SCALE NTS	DATE 12/03/09	SHEET 17 OF 26

STATE OF FLORIDA
Luis R. Lorenzo, P.E.
Florida No. 62514
3/31/16

A	PER DADE LETTER DATED MAY 06, 2010	09/01/10	R.L.
B	PER LETTERS DATED 5/6/10 & 9/29/10	12/09/10	R.L.

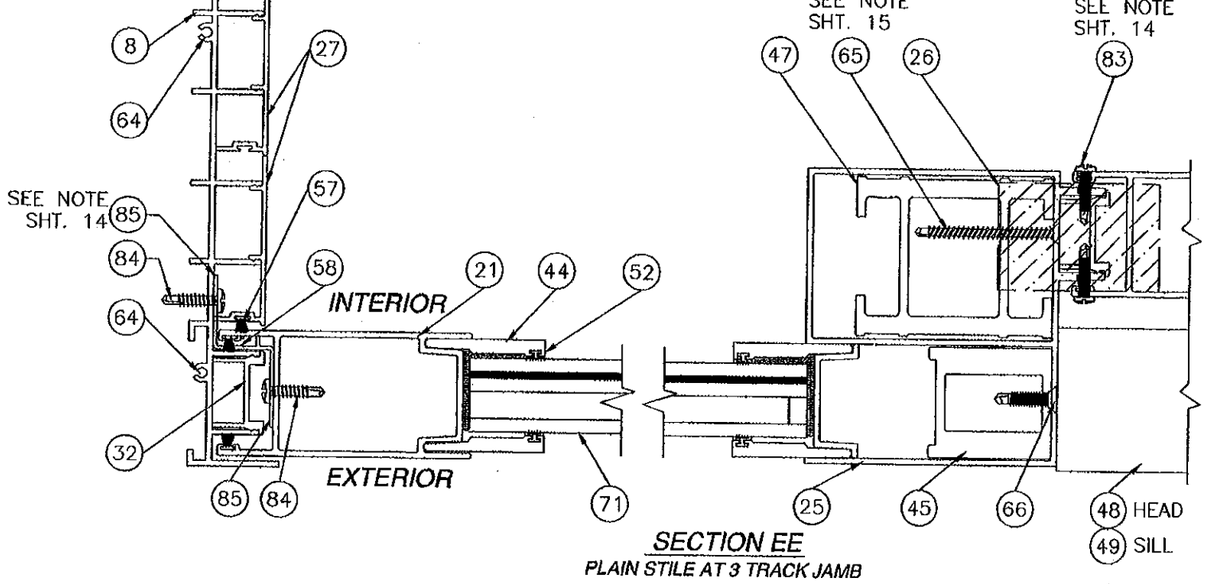

SECTION EE
PLAIN STILE AT 3 TRACK JAMB

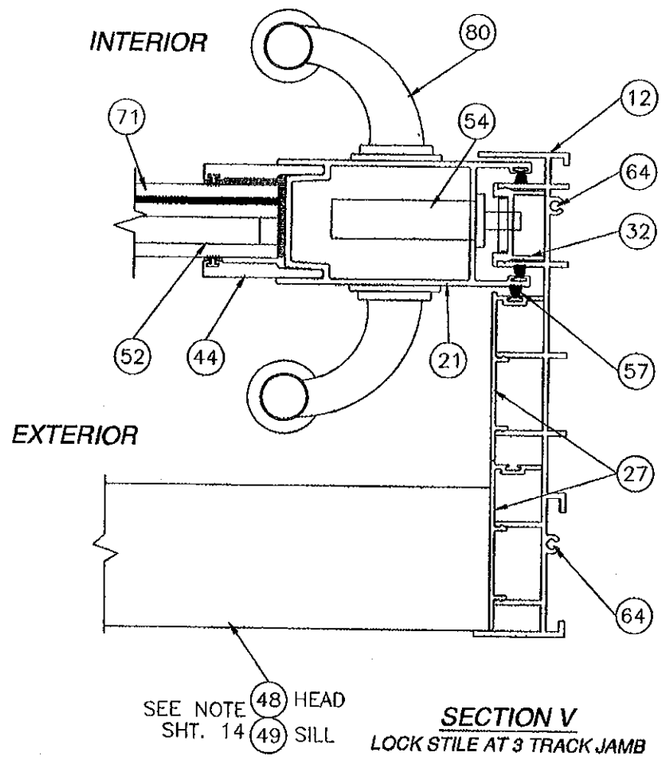

SECTION V
LOCK STILE AT 3 TRACK JAMB

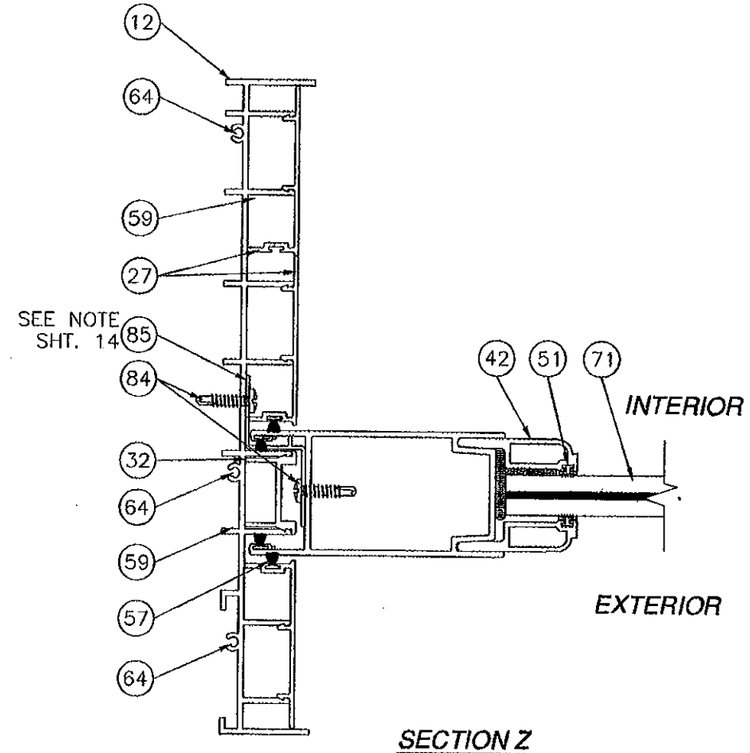

SECTION Z
FIXED PANEL AT 4 TRACK JAMB

PRODUCT REVISED
as complying with the Florida Building Code
Acceptance No 12-0130.14
Expiration Date 3/31/16
By Ishaq I. Chaudhry
Miami Dade Product Control

Approved as complying with the Florida Building Code
Date 03/31/11
NOA# 10.0209.13
Miami Dade Product Control
By Ishaq I. Chaudhry

WinDoor INCORPORATED
7500 AMSTERDAM DRIVE
ORLANDO, FL 32832
Phone: 407.481.8400
Fax: 407.481.0505
www.windoorinc.com

8100 SERIES SMI
REINFORCED & NON-REINFORCED
HORIZONTAL CROSS SECTIONS

DRAWN:	DWG NO.	REV
TJH	08-00878	B
SCALE NTS	DATE 12/03/09	SHEET 18 OF 26

3/1/11
Luis R. Lomas P.E.
Florida No. 62514

REV	DESCRIPTION	DATE	BY
A	PER DADE LETTER DATED MAY 30, 2010	06/30/10	R.L.
B	PER LETTERS DATED 5/6/10 & 9/29/10	12/09/10	R.L.

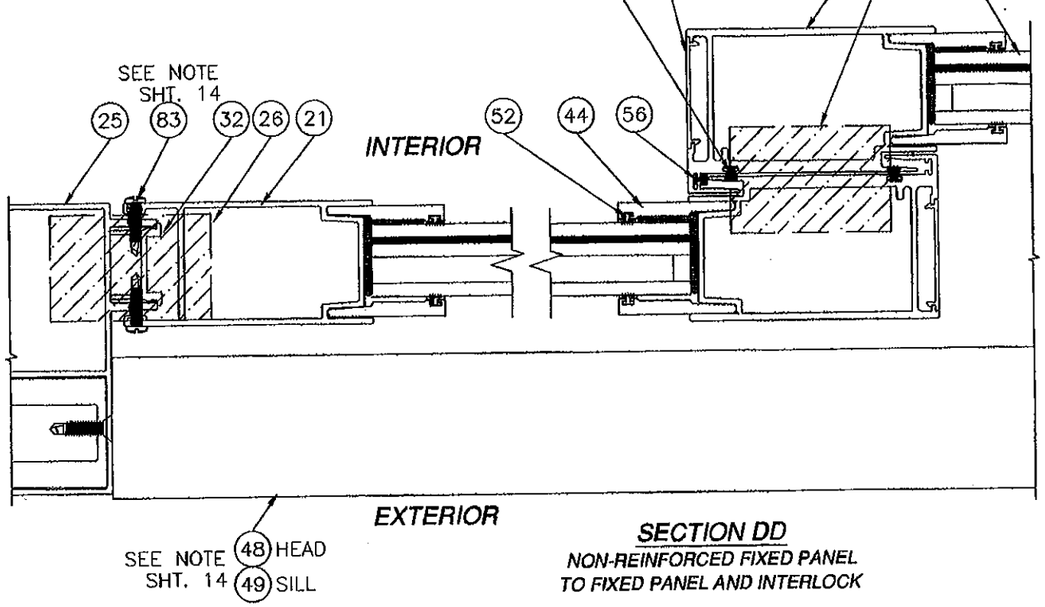

SECTION DD
NON-REINFORCED FIXED PANEL TO FIXED PANEL AND INTERLOCK

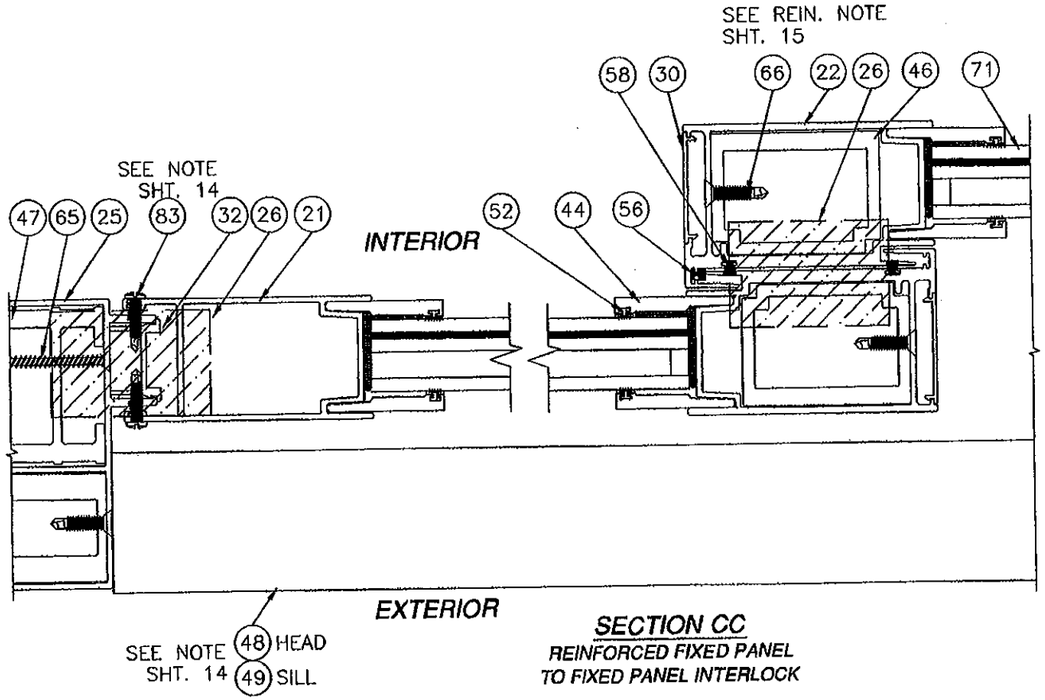

SECTION CC
REINFORCED FIXED PANEL TO FIXED PANEL INTERLOCK

PRODUCT REVISED
as complying with the Florida Building Code
Acceptance No. 12-0130.14
Expiration Date 3/3/16
By Ishaq I. Chanda
Miami Dade Product Control

Approved as complying with the Florida Building Code
Date 03/31/11
NOA# 10-1020.13
Miami Dade Product Control
By Ishaq I. Chanda

WinDoor INCORPORATED
7500 AMSTERDAM DRIVE
ORLANDO, FL 32832
Phone: 407.481.8400
Fax: 407.481.0505
www.windoorinc.com

8100 SERIES SMI
REINFORCED & NON-REINFORCED
HORIZONTAL CROSS SECTIONS

DRAWN:	DWG NO.	REV
TJH	08-00878	B
SCALE NTS	DATE 12/03/09	SHEET 19 OF 26

Luis R. Lomas P.E.
Florida No. 62514
3/1/11

A	PER DADE LETTER DATED MAY 06, 2010	09/01/10	R.L.
B	PER LETTERS DATED 5/6/10 & 9/29/10	12/09/10	R.L.

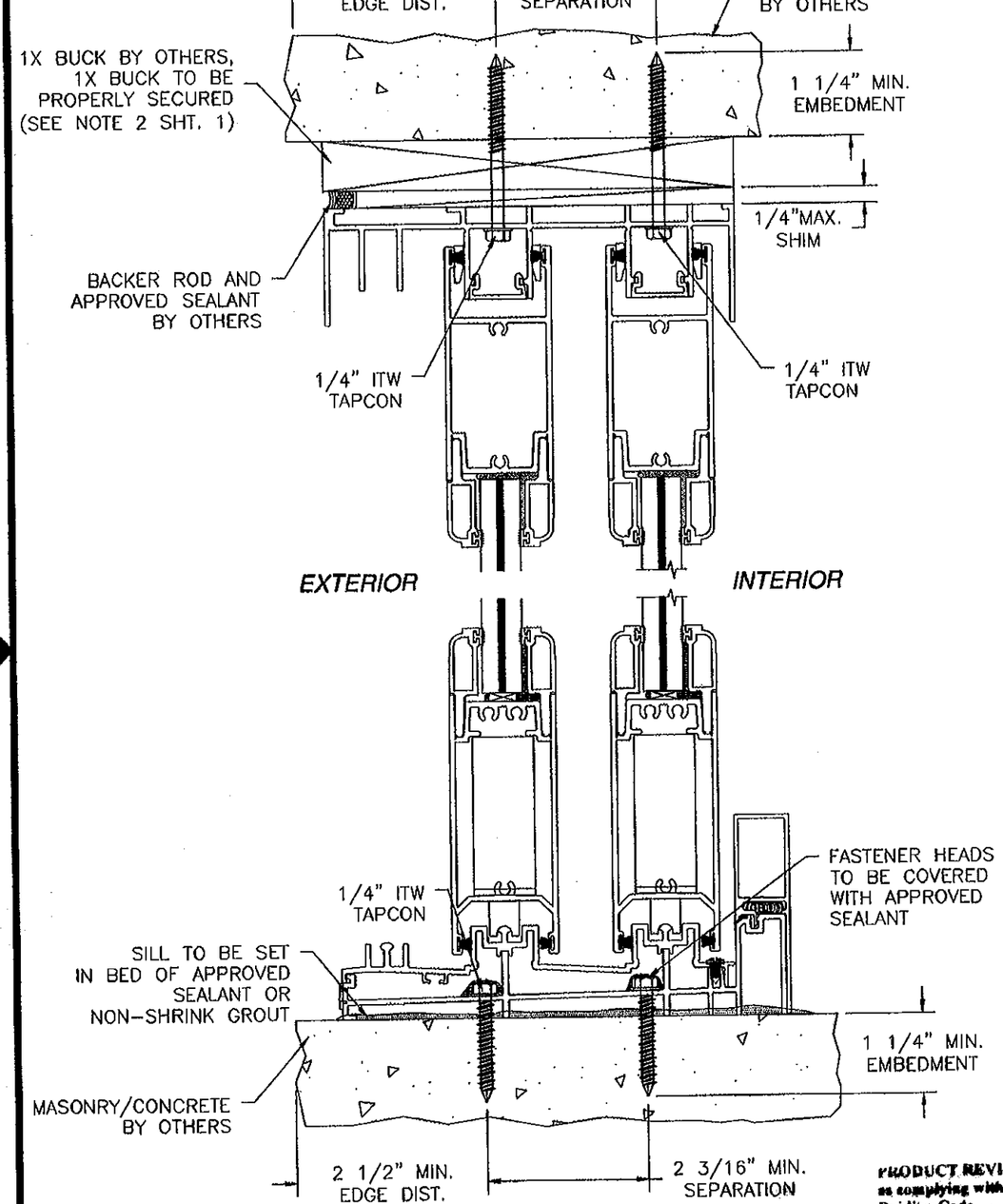

2 TRACK FRAME VERTICAL INSTALLATION

MASONRY/CONCRETE INSTALLATION

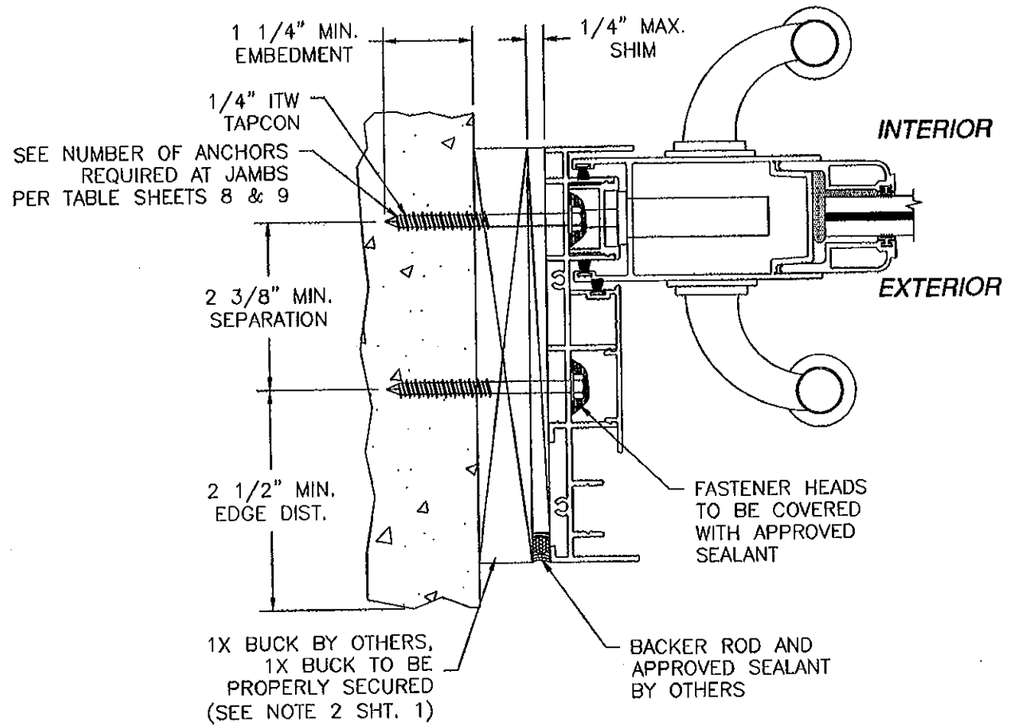

2 TRACK FRAME JAMB INSTALLATION

1X BUCK TO MASONRY/CONCRETE INSTALLATION, 2 TRACK SHOWN 3 TRACK & 4 TRACK ARE SIMILAR

NOTE:
CONCRETE SUBSTRATE INSTALLATION FOR 2 TRACK SHOWN. ANCHORAGE SIMILAR FOR 3 TRACK AND 4 TRACK SYSTEMS. SEE SHEET 10 FOR O.C. ANCHOR SEPARATION.

2 TRACK WITH 3" SILL RISER SHOWN 3 TRACK & 4 TRACK ARE SIMILAR. ALL APPLICABLE SILL RISERS MAYBE USED. SEE D.P. TABLES SHEET 7.

PRODUCT REVISED as complying with the Florida Building Code Acceptance No. 12-0130.14 Expiration Date 3/3/15 By Ishaq I. Chanda Miami Dade Product Control

Approved as complying with the Florida Building Code Date 03/31/11 NOA# 10-0209.13 Miami Dade Product Control By Ishaq I. Chanda

WinDoor INCORPORATED
7500 AMSTERDAM DRIVE
ORLANDO, FL 32832
Phone: 407.481.8400
Fax: 407.481.0505
www.windoorinc.com

8100 SERIES SMI
REINFORCED & NON-REINFORCED
INSTALLATION DETAILS

DRAWN:	DWG NO.	REV
TJH	08-00878	B
SCALE NTS	DATE 12/03/09	SHEET 20 OF 26

3/1/11
Luis R. Lomas P.E.
Florida No. 62514

REV	DESCRIPTION	DATE	APPROVED
A	PER DADE LETTER DATED MAY 06, 2010	09/01/10	R.L.
B	PER LETTERS DATED 5/6/10 & 9/29/10	12/09/10	R.L.

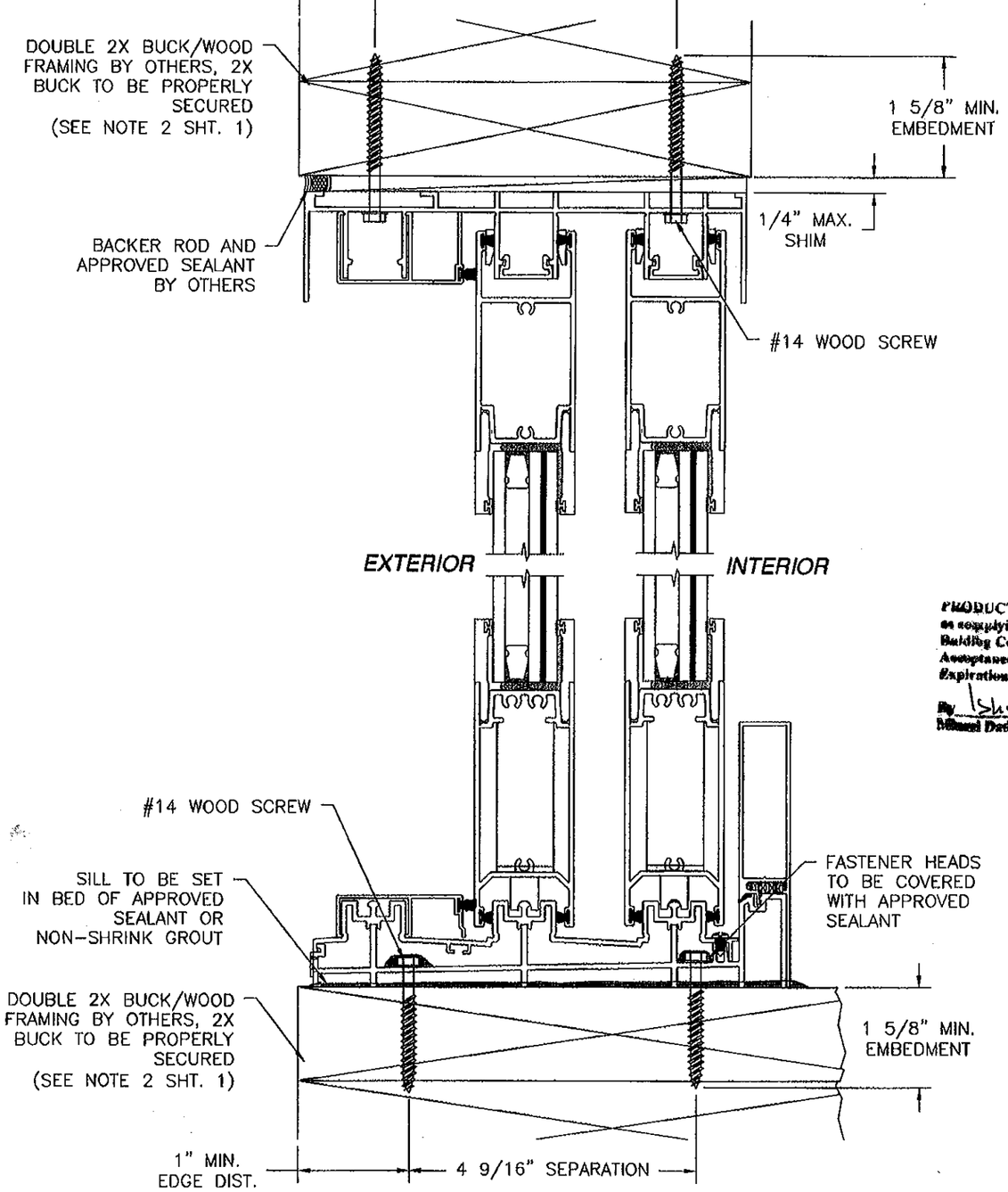

3 TRACK FRAME VERTICAL INSTALLATION
2X BUCK/WOOD FRAME INSTALLATION

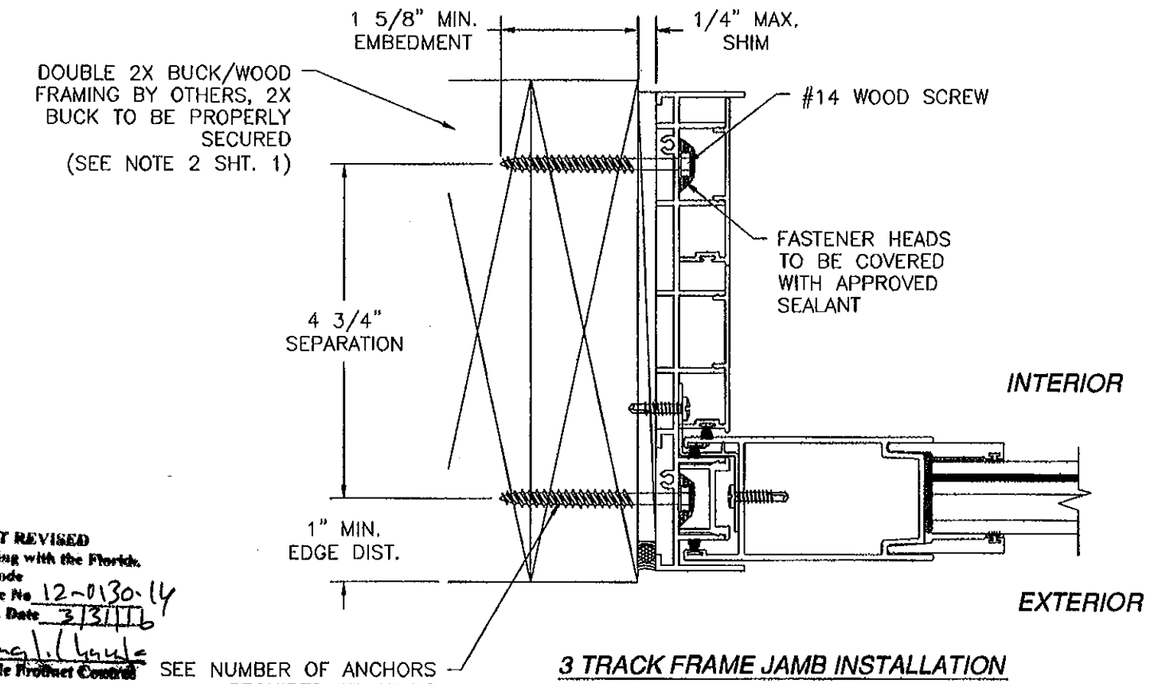

3 TRACK FRAME JAMB INSTALLATION
2X BUCK/WOOD FRAME INSTALLATION, 3 TRACK SHOWN 2 TRACK & 4 TRACK ARE SIMILAR

PRODUCT REVISED to comply with the Florida Building Code
Acceptance No. 12-0130.14
Expiration Date 3/31/16
By Miami Dade Product Control

NOTE:
2X BUCK/WOOD FRAME SUBSTRATE INSTALLATION FOR 3 TRACK SHOWN. ANCHORAGE SIMILAR FOR 2 TRACK AND 4 TRACK SYSTEMS. SEE SHEET 10 FOR O.C. ANCHOR SEPARATION.

3 TRACK WITH 4 1/4" SILL RISER SHOWN 2 TRACK & 4 TRACK ARE SIMILAR. ALL APPLICABLE SILL RISERS MAYBE USED. SEE D.P. TABLES SHEET 7.

Approved as complying with the Florida Building Code
Date 03/31/11
NOA# 10-0209.13
Miami Dade Product Control
By

WinDoor INCORPORATED
7500 AMSTERDAM DRIVE
ORLANDO, FL 32832
Phone: 407.481.8400
Fax 407.481.0505
www.windoorinc.com

8100 SERIES SMI
REINFORCED & NON-REINFORCED
INSTALLATION DETAILS

DRAWN:	DWG NO.	REV
TJH	08-00878	B
SCALE NTS	DATE 12/03/09	SHEET 21 OF 26

3/1/11
Luis R. Lomas, P.E.
Florida No. 62514

REVISIONS			
A	PER DADE LETTER DATED MAY 06, 2010	09/01/10	R.L.
B	PER LETTERS DATED 5/6/10 & 9/29/10	12/09/10	R.L.

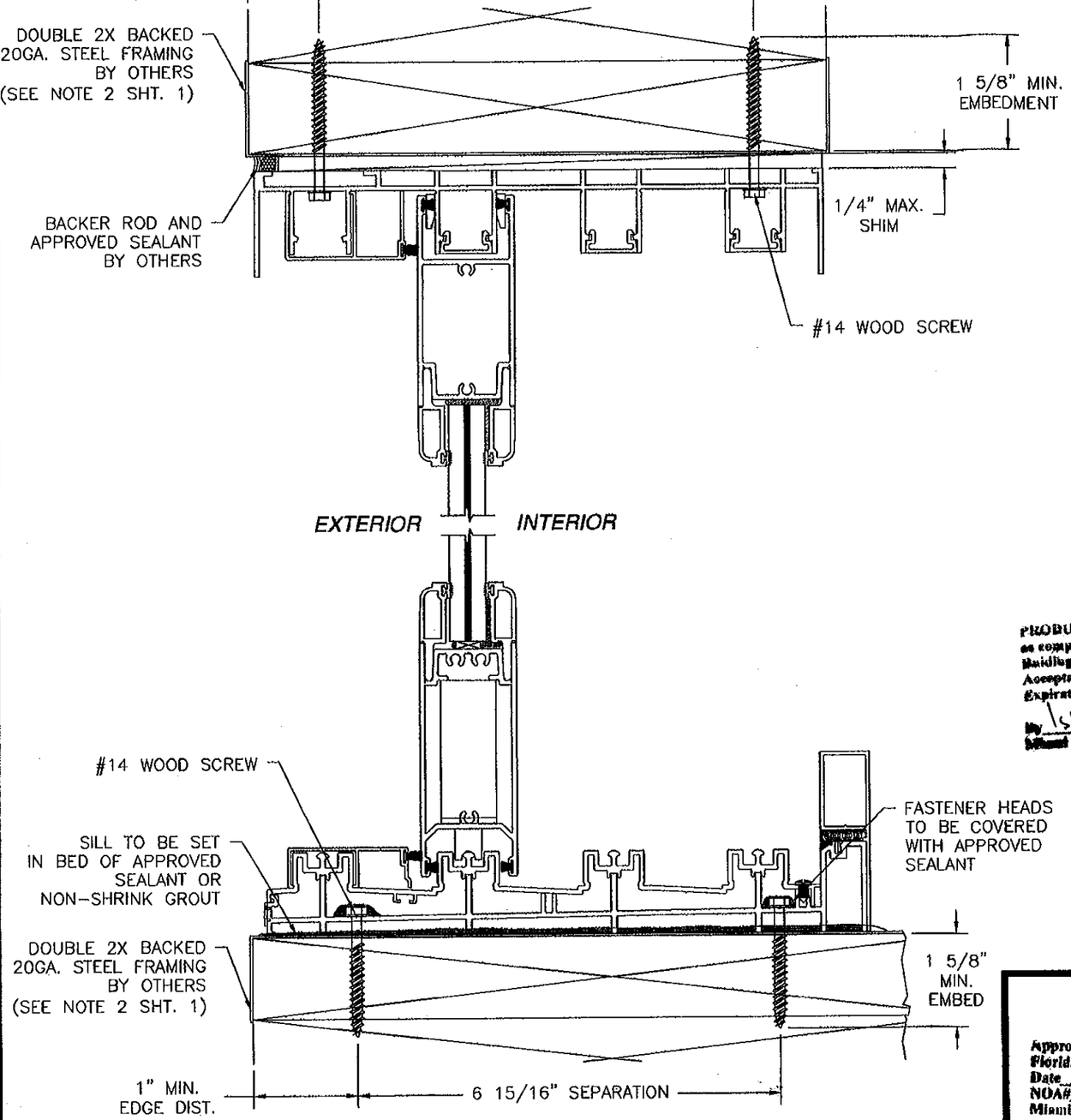

4 TRACK FRAME VERTICAL INSTALLATION
WOOD BACKED 20 GA. STEEL STUD INSTALLATION

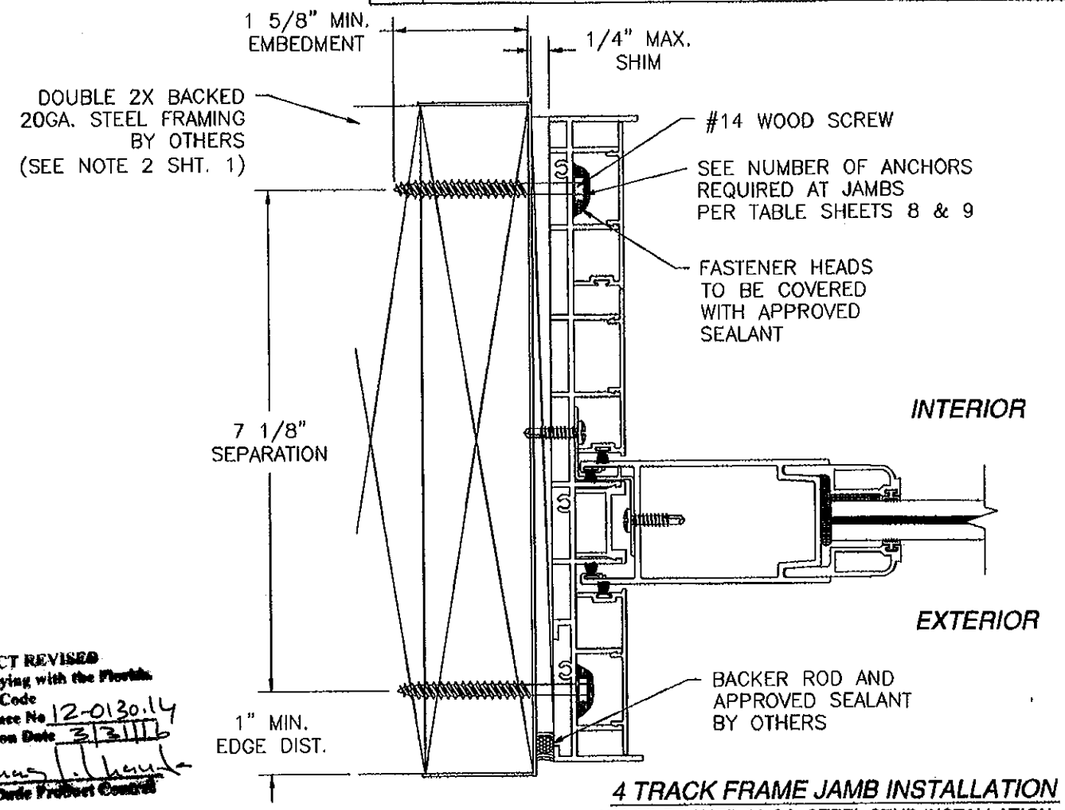

4 TRACK FRAME JAMB INSTALLATION
WOOD BACKED 20 GA. STEEL STUD INSTALLATION, 4 TRACK SHOWN 2 TRACK & 3 TRACK ARE SIMILAR

PRODUCT REVISED as complying with the Florida Building Code Acceptance No. 12-0130.14 Expiration Date 3/31/16 By Miami Dade Product Control

NOTE:
WOOD BACKED 20 GA. STEEL STUD SUBSTRATE INSTALLATION FOR 4 TRACK SHOWN. ANCHORAGE SIMILAR FOR 2 TRACK AND 3 TRACK SYSTEMS. SEE SHEET 10 FOR O.C. ANCHOR SEPARATION.

4 TRACK WITH 3" SILL RISER SHOWN 2 TRACK & 3 TRACK ARE SIMILAR. ALL APPLICABLE SILL RISERS MAYBE USED. SEE D.P. TABLES SHEET 7.

Approved as complying with the Florida Building Code Date 9/21/11 NOA# 10-0209.15 Miami Dade Product Control By

WinDoor INCORPORATED
7500 AMSTERDAM DRIVE
ORLANDO, FL 32832
Phone: 407.481.8400
Fax: 407.481.0505
www.windoorinc.com

8100 SERIES SMI
REINFORCED & NON-REINFORCED
INSTALLATION DETAILS

DRAWN:	DWG NO.	REV
TJH	08-00878	B
SCALE NTS	DATE 12/03/09	SHEET 22 OF 26

3/1/11
STATE OF FLORIDA
Luis R. Llamas, P.E.
Florida No. 62514

A	PER DADE LETTER DATED MAY 06, 2010	09/01/10	R.L.
B	PER LETTERS DATED 5/6/10 & 9/29/10	12/09/10	R.L.

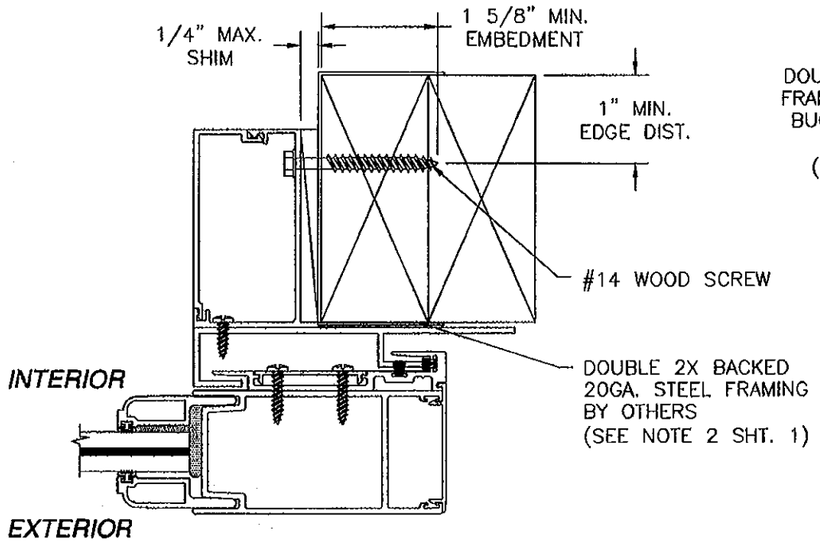

POCKET HOOK STRIP
WOOD BACKED 20 GA. STEEL STUD INSTALLATION

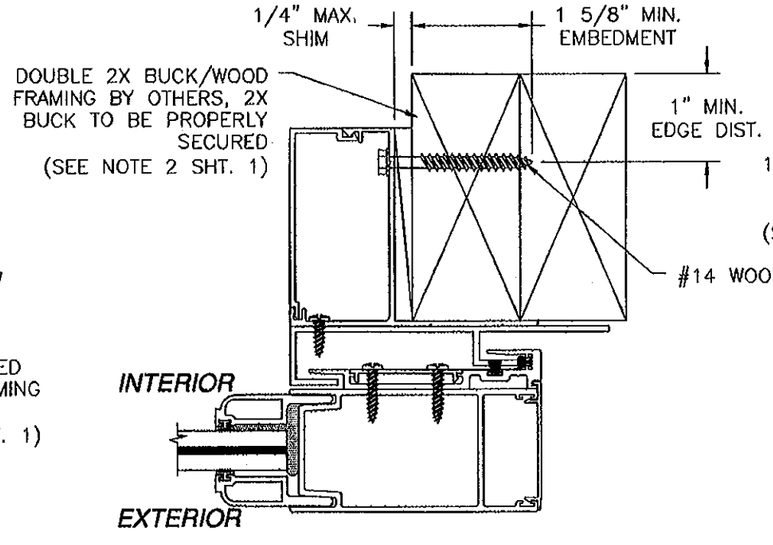

POCKET HOOK STRIP
2X BUCK/WOOD FRAME INSTALLATION

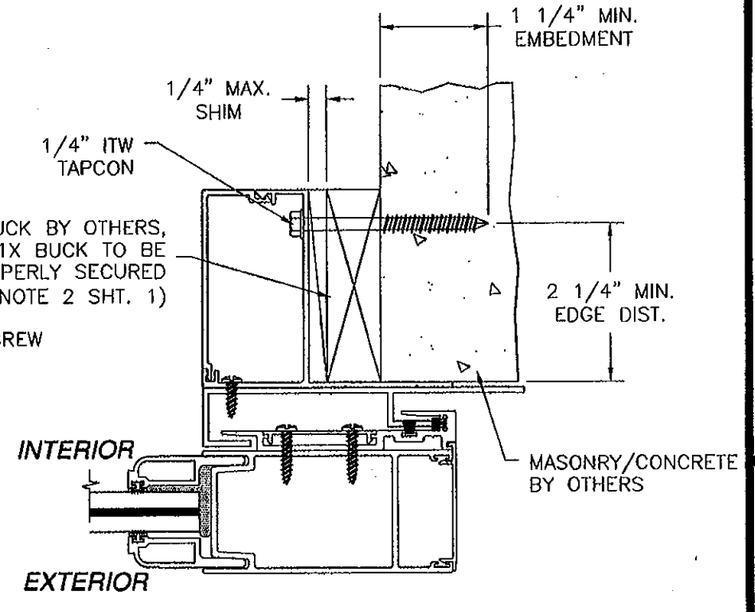

POCKET HOOK STRIP
MASONRY/CONCRETE INSTALLATION

PRODUCT REVISED
as complying with the Florida Building Code
Acceptance No. 12-0130.14
Expiration Date 3/31/16
By Ishaq I. Chanda
Miami Dade Product Control

Approved as complying with the Florida Building Code
Date 03/31/11
NOA# 10-0209.13
Miami Dade Product Control
By Ishaq I. Chanda

WinDoor INCORPORATED
7500 AMSTERDAM DRIVE
ORLANDO, FL 32832
Phone: 407.481.8400
Fax: 407.481.0505
www.windoorinc.com

8100 SERIES SMI
REINFORCED & NON-REINFORCED
INSTALLATION DETAILS

DRAWN:	DWG NO.	REV
TJH	08-00878	B
SCALE NTS	DATE 12/03/09	SHEET 23 OF 26

3/1/11
STATE OF
Luis R. Lomas P.E.
Florida No. 62514

A	PER DADE LETTER DATED MAY 06, 2010	09/01/10	R.L.
B	PER LETTERS DATED 5/6/10 & 9/29/10	12/09/10	R.L.

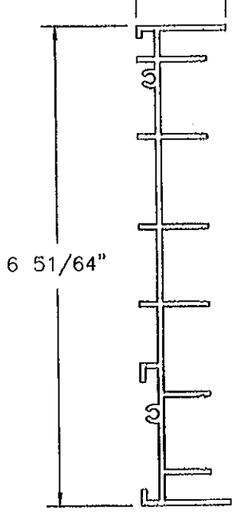

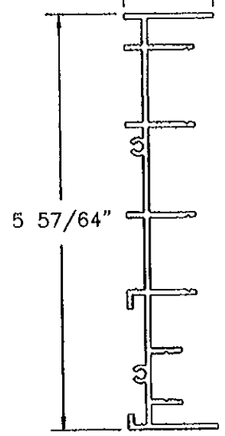

(2) 2 TRACK WS FRAME JAMB
ALUMINUM 6063-T6 .075" THICK

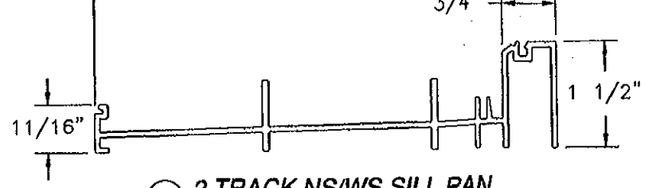

(3) 2 TRACK NS/WS SILL PAN
ALUMINUM 6063-T6 .075" THICK

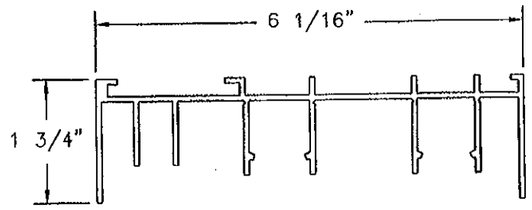

(1) 2 TRACK WS FRAME HEAD
ALUMINUM 6063-T6 .075" THICK

(8) 3 TRACK FRAME JAMB
ALUMINUM 6063-T6 .075" THICK

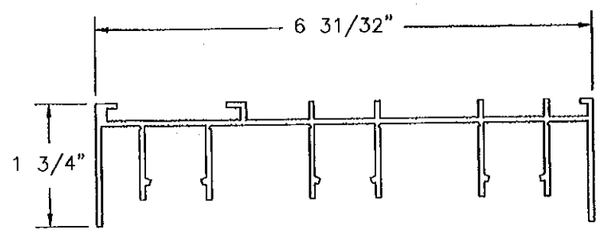

(7) 3 TRACK FRAME HEAD
ALUMINUM 6063-T6 .075" THICK

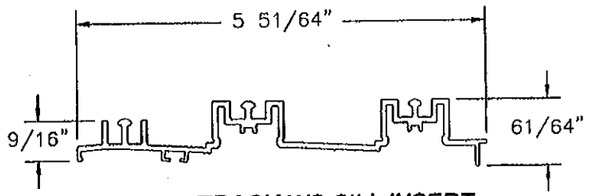

(4) 2 TRACK WS SILL INSERT
ALUMINUM 6063-T6 .075" THICK

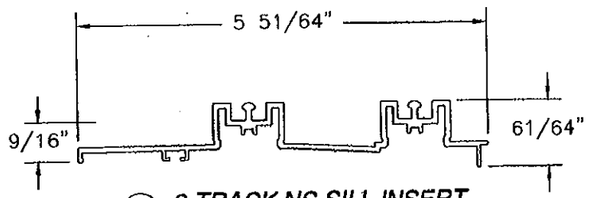

(61) 2 TRACK NS SILL INSERT
ALUMINUM 6063-T6 .075" THICK

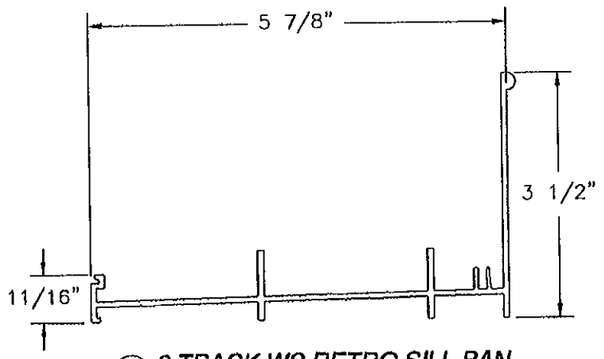

(70) 2 TRACK WS RETRO SILL PAN
ALUMINUM 6063-T6 .075" THICK

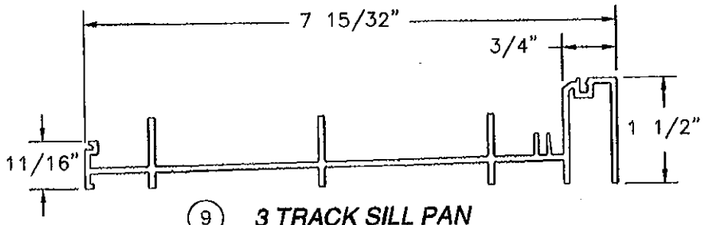

(9) 3 TRACK SILL PAN
ALUMINUM 6063-T6 .075" THICK

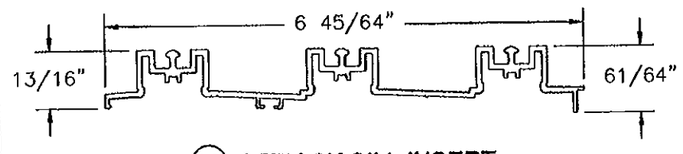

(10) 3 TRACK SILL INSERT
ALUMINUM 6063-T6 .075" THICK

PRODUCT REVISED
as complying with the Florida
Building Code
Acceptance No. 12-0130.14
Expiration Date 3/31/16
By Ishaq I. Chanda
Miami Dade Product Control

Approved as complying with the
Florida Building Code
Date 02/21/11
NOA# 10-0309.13
Miami Dade Product Control
By Ishaq I. Chanda

WinDoor
INCORPORATED
7500 AMSTERDAM DRIVE
ORLANDO, FL 32832
Phone: 407.481.8400
Fax: 407.481.0505
www.windoorinc.com

8100 SERIES SMI
REINFORCED & NON-REINFORCED
COMPONENTS

DRAWN:	DWG NO.	REV
TJH	08-00878	B
SCALE NTS	DATE 12/03/09	SHEET 24 OF 26

Luis R. Lomas, P.E.
Florida No. 62514
3/1/11

REV	DESCRIPTION	DATE	BY
A	PER DADE LETTER DATED MAY 06, 2010	09/01/10	R.L.
B	PER LETTERS DATED 5/6/10 & 9/29/10	12/09/10	R.L.

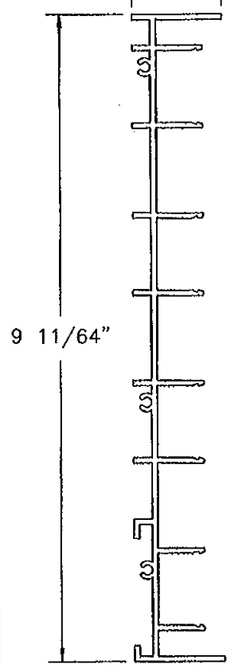

(12) **4 TRACK FRAME JAMB**
ALUMINUM 6063-T6 .075" THICK

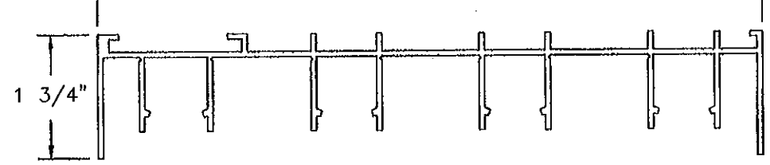

(11) **4 TRACK FRAME HEAD**
ALUMINUM 6063-T6 .075" THICK

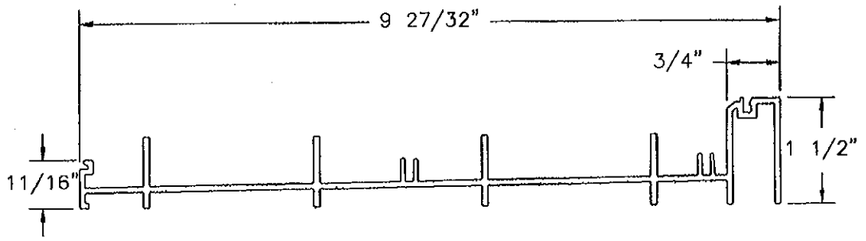

(13) **4 TRACK SILL PAN**
ALUMINUM 6063-T6 .075" THICK

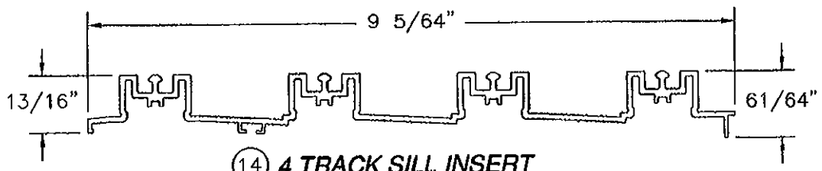

(14) **4 TRACK SILL INSERT**
ALUMINUM 6063-T6 .075" THICK

(30) **INTERLOCK SNAP COVER**
ALUMINUM 6063-T6 .051" THICK

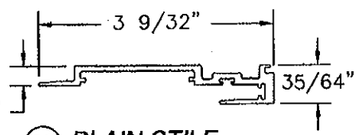

(28) **PLAIN STILE INTERLOCK**
ALUMINUM 6063-T6 .075" THICK

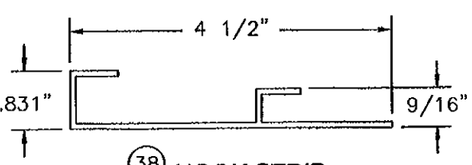

(38) **HOOK STRIP**
ALUMINUM 6063-T6 .080" THICK

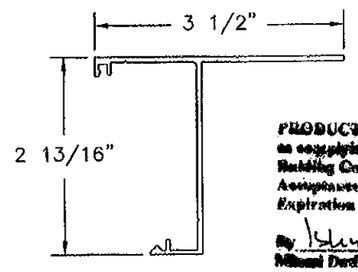

(40) **HOOK STRIP WALL MOUNT**
ALUMINUM 6063-T6 .075" THICK

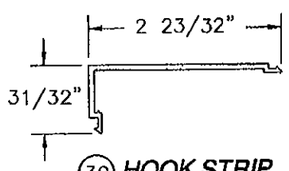

(39) **HOOK STRIP WALL COVER**
ALUMINUM 6063-T6 .075" THICK

PRODUCT REVISED
as complying with the Florida Building Code
Acceptance No. 12-0130.14
Expiration Date 3/31/16
By
Miami Dade Product Control

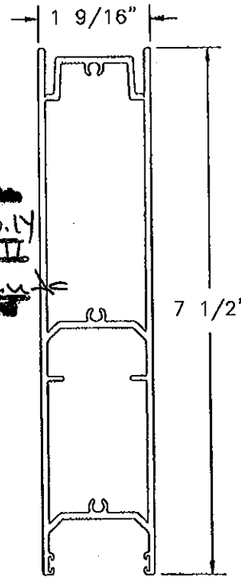

(19) **TALL BOTTOM RAIL**
ALUMINUM 6063-T6 .080" THICK

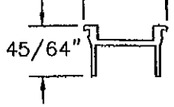

(32) **PANEL STILE JAMB INSERT**
ALUMINUM 6063-T6 .075" THICK

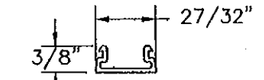

(15) **FRAME HEAD INSERT**
ALUMINUM 6063-T6 .060" THICK

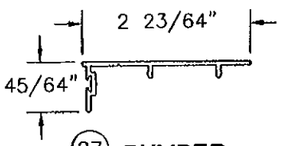

(27) **BUMPER JAMB INSERT**
ALUMINUM 6063-T6 .060" THICK

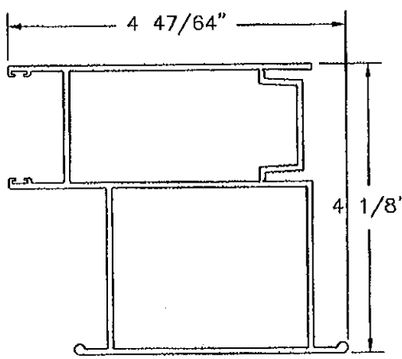

(24) **MALE BUTT STILE EXT. OFFSET**
ALUMINUM 6063-T6 .080" THICK

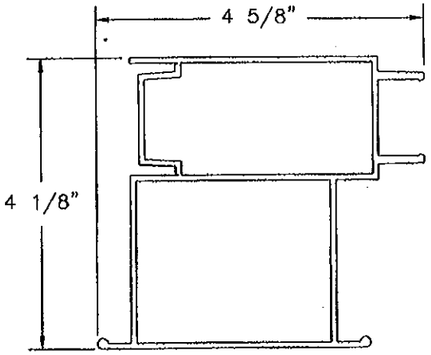

(23) **FEMALE BUTT STILE EXT. OFFSET**
ALUMINUM 6063-T6 .080" THICK

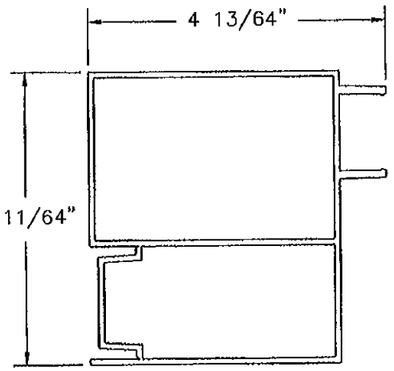

(25) **FEMALE BUTT STILE INT. OFFSET**
ALUMINUM 6063-T6 .080" THICK

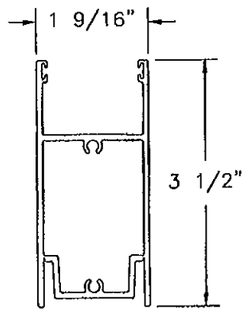

(17) **TOP RAIL**
ALUMINUM 6063-T6 .080" THICK

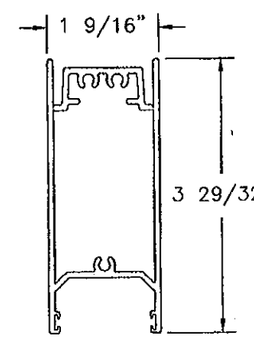

(18) **BOTTOM RAIL**
ALUMINUM 6063-T6 .080" THICK

Approved as complying with the Florida Building Code
Date 03/31/11
NOA# 10-0804.13
Miami Dade Product Control
By

WinDoor INCORPORATED
7500 AMSTERDAM DRIVE
ORLANDO, FL 32832
Phone: 407.481.8400
Fax: 407.481.0505
www.windoorinc.com

8100 SERIES SMI
REINFORCED & NON-REINFORCED
COMPONENTS

DRAWN:	DWG NO.	REV
TJH	08-00878	B
SCALE NTS	DATE 12/03/09	SHEET 25 OF 26

3/1/11
Luis R. Lomas, P.E.
Florida No. 62514

REV	DESCRIPTION	DATE	BY
A	PER DADE LETTER DATED MAY 06, 2010	06/01/10	R.L.
B	PER LETTERS DATED 5/6/10 & 9/29/10	12/09/10	R.L.

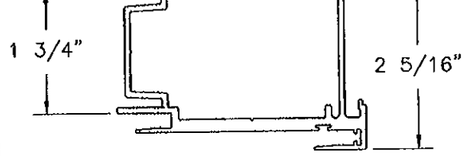

(22) **INTERLOCK STILE**
ALUMINUM 6063-T6 .080" THICK

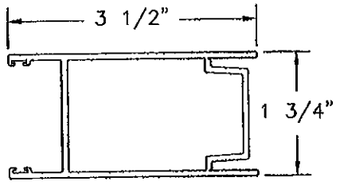

(21) **LOCK STILE**
ALUMINUM 6063-T6 .080" THICK

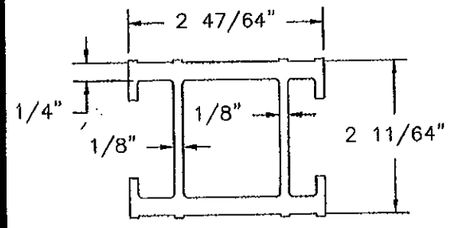

(47) **FEMALE BUTT STILE REINFORCING BAR**
ALUMINUM 6005-T5 .125" THICK

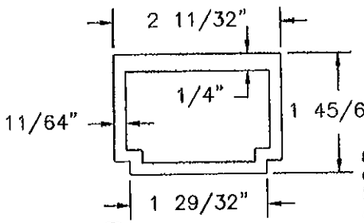

(46) **INTERLOCK REINFORCING BAR**
ALUMINUM 6005-T5 .188" THICK

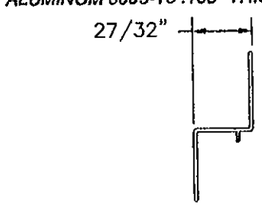

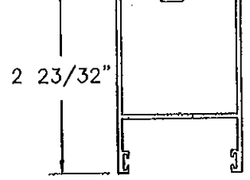

(73) **MT SCREEN STILE**
ALUMINUM 6063-T6 .060" THICK

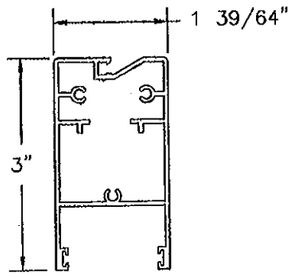

(72) **MT SCREEN TOP/BOTTOM RAIL**
ALUMINUM 6063-T6 .060" THICK

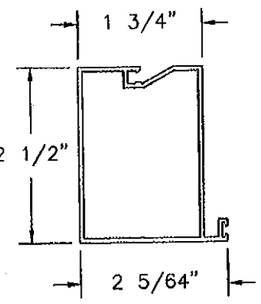

PRODUCT REVISED
as complying with the Florida
Building Code
Acceptance No. 12-0130.14
Expiration Date 10/31/2016
By Chag I. Chanda
Miami Dade Product Control

(74) **MT SCREEN STILE W/SEAL**
ALUMINUM 6063-T6 .060" THICK

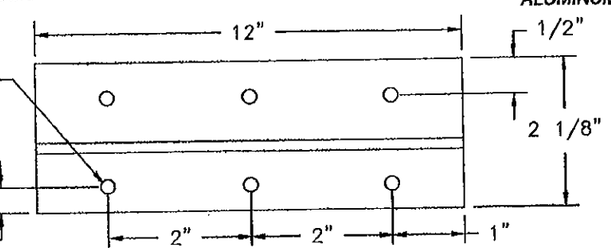

(85) **FIXED PANEL Z-CLIP**
6063-T6 ALUM. .050" THICK

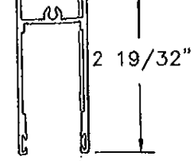

(76) **BOX SCREEN TOP/BOTTOM RAIL**
ALUMINUM 6063-T6 .062" THICK

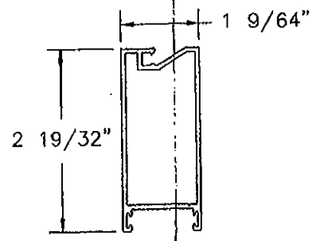

(73) **BOX SCREEN STILE**
ALUMINUM 6063-T6 .062" THICK

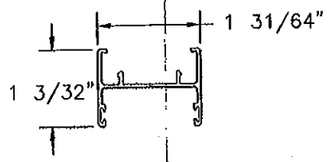

(79) **BOX SCREEN ASTRAGAL**
ALUMINUM 6063-T6 .050" THICK

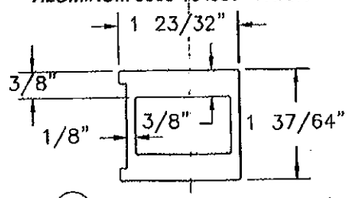

(45) **6000 BUTT STILE REINFORCING BAR**
ALUMINUM 6061-T6 .375" THICK

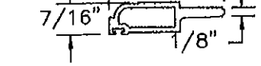

(41) **9/16" HORIZONTAL GLASS STOP**
ALUMINUM 6063-T6 .070" THICK

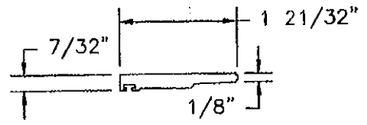

(44) **1" VERTICAL GLASS STOP**
ALUMINUM 6063-T6 .20" THICK

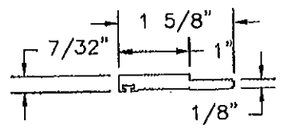

(43) **1" HORIZONTAL GLASS STOP**
ALUMINUM 6063-T6 .20" THICK

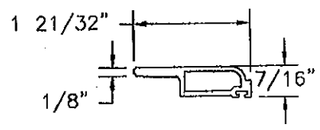

(42) **9/16" VERTICAL GLASS STOP**
ALUMINUM 6063-T6 .070" THICK

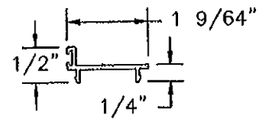

(78) **BOX SCREEN SWEEP**
ALUMINUM 6063-T6 .060" THICK

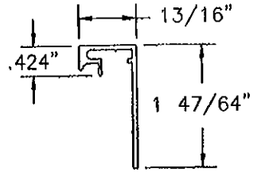

(33) **1 3/4" SILL RISER**
ALUMINUM 6063-T6 .060" THICK

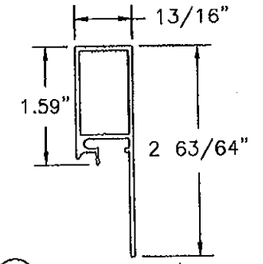

(35) **3" SILL RISER**
ALUMINUM 6063-T6 .060" THICK

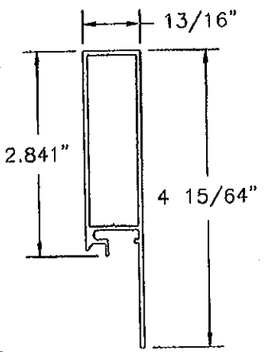

(37) **4 1/4" SILL RISER**
ALUMINUM 6063-T6 .060" THICK

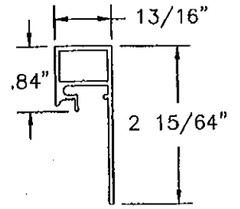

(34) **2 1/4" SILL RISER**
ALUMINUM 6063-T6 .060" THICK

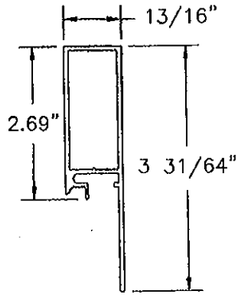

(36) **3 1/2" SILL RISER**
ALUMINUM 6063-T6 .060" THICK

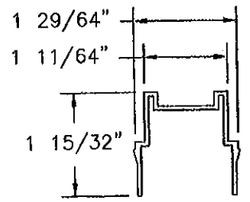

(75) **MT SCREEN ASTRAGAL**
ALUMINUM 6063-T6 .060" THICK

Approved as complying with the Florida Building Code
Date 03/31/11
NOA# 10-0209.13
Miami Dade Product Control
By Chag I. Chanda

WinDoor INCORPORATED
7500 AMSTERDAM DRIVE
ORLANDO, FL 32832
Phone: 407.481.8400
Fax: 407.481.0505
www.windoorinc.com

8100 SERIES SMI
REINFORCED & NON-REINFORCED
COMPONENTS

DRAWN:	DWG NO.	REV
TJH	08-00878	B
SCALE NTS	DATE 12/03/09	SHEET 26 OF 26

Luis R. Lomas P.E.
Florida No. 62514
3/08/11