MIAMI-DADE COUNTY
DEPARTMENT OF PERMITTING, ENVIRONMENT, AND REGULATORY AFFAIRS (PERA)
BOARD AND CODE ADMINISTRATION DIVISION

MIAMI-DADE COUNTY
PRODUCT CONTROL SECTION
11805 SW 26 Street, Room 208
Miami, Florida 33175-2474
T (786) 315-2590 F (786) 315-2599
www.miamidade.gov/pera/

NOTICE OF ACCEPTANCE (NOA)

WinDoor, Inc.
7500 Amsterdam Drive
Orlando, FL 32832

SCOPE:

This NOA is being issued under the applicable rules and regulations governing the use of construction materials. The documentation submitted has been reviewed and accepted by Miami-Dade County PERA - Product Control Section to be used in Miami Dade County and other areas where allowed by the Authority Having Jurisdiction (AHJ).

This NOA shall not be valid after the expiration date stated below. The Miami-Dade County Product Control Section (In Miami Dade County) and/or the AHJ (in areas other than Miami Dade County) reserve the right to have this product or material tested for quality assurance purposes. If this product or material fails to perform in the accepted manner, the manufacturer will incur the expense of such testing and the AHJ may immediately revoke, modify, or suspend the use of such product or material within their jurisdiction. PERA reserves the right to revoke this acceptance, if it is determined by Miami-Dade County Product Control Section that this product or material fails to meet the requirements of the applicable building code.

This product is approved as described herein, and has been designed to comply with the Florida Building Code, including the High Velocity Hurricane Zone.

DESCRIPTION: Series "1000" Aluminum Fixed Window – L.M.I.

APPROVAL DOCUMENT: Drawing No. **08-00665,** titled "Series 1000 Aluminum Fixed Window - LMI 4'0 x 10'0 and 5'0 x 8'0", sheets 1 through 8 of 8, dated 12/19/08, prepared by manufacturer, signed and sealed by Luis R. Lomas, P.E., bearing the Miami-Dade County Product Control Revision stamp with the Notice of Acceptance number and expiration date by the Miami-Dade County Product Control Section.

MISSILE IMPACT RATING: Large and Small Missile Impact Resistant

LABELING: Each unit shall bear a permanent label with the manufacturer's name or logo, city, state, model/series, and following statement: "Miami-Dade County Product Control Approved", unless otherwise noted herein.

RENEWAL of this NOA shall be considered after a renewal application has been filed and there has been no change in the applicable building code negatively affecting the performance of this product.

TERMINATION of this NOA will occur after the expiration date or if there has been a revision or change in the materials, use, and/or manufacture of the product or process. Misuse of this NOA as an endorsement of any product, for sales, advertising or any other purposes shall automatically terminate this NOA. Failure to comply with any section of this NOA shall be cause for termination and removal of NOA.

ADVERTISEMENT: The NOA number preceded by the words Miami-Dade County, Florida, and followed by the expiration date may be displayed in advertising literature. If any portion of the NOA is displayed, then it shall be done in its entirety.

INSPECTION: A copy of this entire NOA shall be provided to the user by the manufacturer or its distributors and shall be available for inspection at the job site at the request of the Building Official.

This NOA **revises NOA # 10-1102.08** and consists of this page 1 and evidence page E-1, as well as approval document mentioned above.

The submitted documentation was reviewed by **Manuel Perez, P.E.**

MIAMI-DADE COUNTY APPROVED

3/27/12

NOA No. 12-0130.21
Expiration Date: February 23, 2016
Approval Date: April 05, 2012

NOTICE OF ACCEPTANCE: EVIDENCE SUBMITTED

A. DRAWINGS

1. Manufacturer's die drawings and sections.
2. Drawing No. **08-00665,** titled "Series 1000 Aluminum Fixed Window – LMI 4'0 x 10'0 and 5'0 x 8'0", sheets 1 through 8 of 8, dated 12/19/08, prepared by manufacturer, signed and sealed by Luis R. Lomas, P.E.

B. TESTS

1. Test reports on: 1) Air Infiltration Test, per FBC, TAS 202-94
   2) Uniform Static Air Pressure Test, Loading per FBC, TAS 202-94
   3) Water Resistance Test, per FBC, TAS 202-94
   4) Large Missile Impact Test per FBC, TAS 201-94
   5) Cyclic Wind Pressure Loading per FBC, TAS 203-94

   along with installation diagram of an aluminum fixed window, prepared by National Certified Testing Laboratories, Test Report No. **NCTL-210-2971-1,** Specimens 1, 2, 3, 4, 5, 6, 7, 8, 15 and 16, dated 12/08/03-01/22/04, signed and sealed by Gerald J. Ferrara, P.E. ***(Submitted under previous NOA#10-1102.08)***

C. CALCULATIONS:

1. Anchor verification calculations and structural analysis, complying with FBC-2007, dated 1/12/09 and 10/06/10, prepared, signed and sealed by Luis R. Lomas, P.E.
2. Glazing complies with ASTM E1300-04***(Submitted under NOA#10-1102.08)***

D. QUALITY ASSURANCE

1. Miami-Dade Department of Permitting, Environment, and Regulatory Affairs (PERA).

E. MATERIAL CERTIFICATIONS

1. Notice of Acceptance No. **11–0624.02** issued to **E.I. DuPont DeNemours & Co.**, Inc. for their "**DuPont SentryGlas® Interlayer**" dated 08/25/11, expiring on 01/14/17.
2. Notice of Acceptance No. **08–1224.04** issued to Solutia, Inc. for their "**Saflex Composites Glass Interlayer with PET Core**" dated 02/25/09, expiring on 12/11/13.

F. STATEMENTS

1. Statement letter of conformance, complying with FBC-2010, and of no financial interest, dated January 19, 2012, signed and sealed by Luis R. Lomas, P.E.
2. Laboratory compliance letter for Test Report No. **NCTL-210-2971-1**, issued by National Certified Testing Laboratories, dated 07/20/05, signed and sealed by Gerald J. Ferrara, P.E. ***(Submitted under previous NOA#10-1102.08)***

G. OTHER

1. Notice of Acceptance No. **10-1102.08,** issued to WinDoor, Inc. for their Series "1000" Aluminum Fixed Window – L.M.I., approved on 03/10/11 and expiring on 02/23/16.

Manuel Perez, P.E.
Product Control Examiner
NOA No. 12-0130.21
Expiration Date: February 23, 2016
Approval Date: April 05, 2012

REVISIONS			
REV	DESCRIPTION	DATE	APPROVED

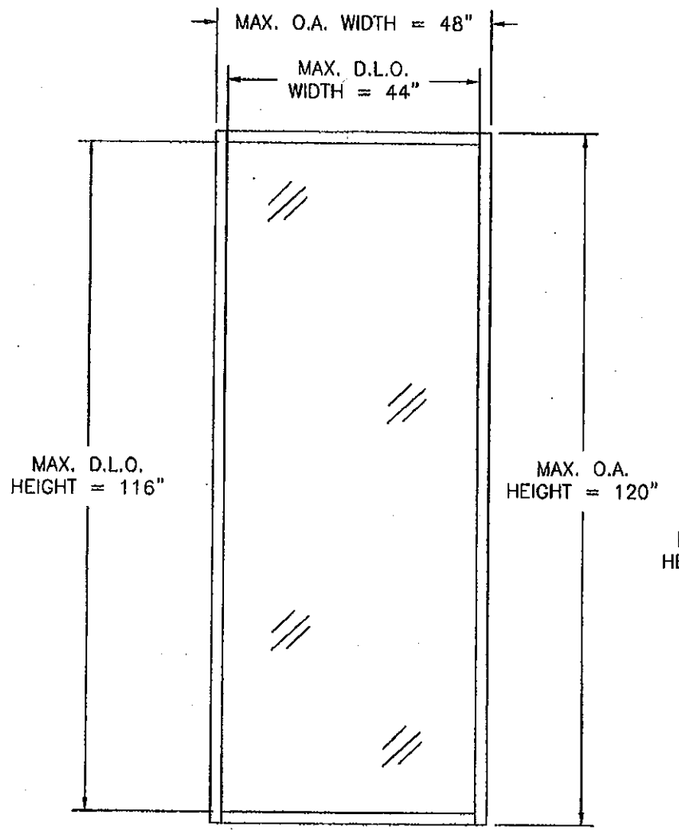

SERIES 1000 FW -LMI
4'0 x 10'0
TYPICAL ELEVATION EXTERIOR VIEW

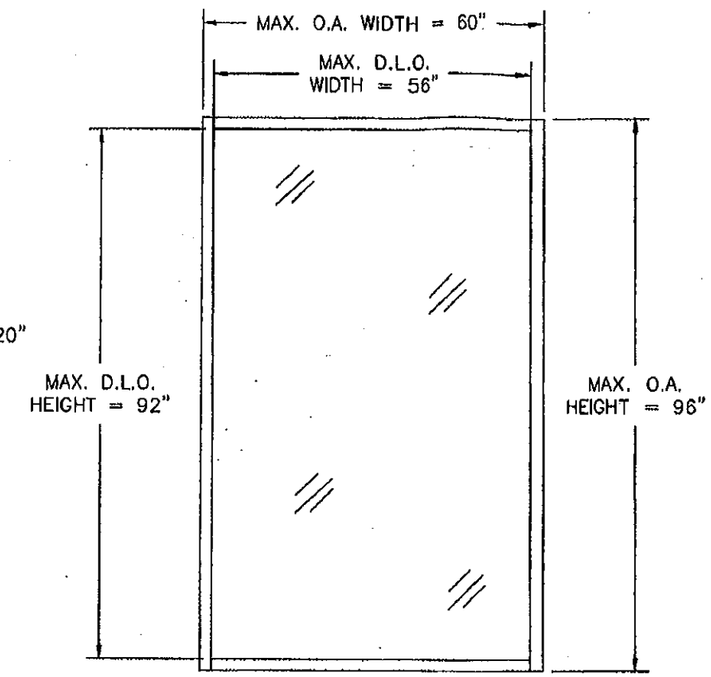

SERIES 1000 FW -LMI
5'0 x 8'0
TYPICAL ELEVATION EXTERIOR VIEW

NOTES:

1) THE PRODUCT SHOWN HEREIN IS DESIGNED AND MANUFACTURED TO COMPLY WITH REQUIREMENTS OF THE CURRENT FLORIDA BUILDING CODE INCLUDING THE HVHZ.
2) WOOD FRAMING/2X BUCK, 20GA. WOOD BACKED STEEL STUD OR MASONRY/CONCRETE OPENING TO BE DESIGNED AND ANCHORED TO PROPERLY TRANSFER ALL LOADS TO STRUCTURE. WOOD FRAMING/2X BUCK, 20GA. WOOD BACKED STEEL STUD OR MASONRY/CONCRETE OPENING IS THE RESPONSIBILITY OF THE ARCHITECT OR ENGINEER OF RECORD.
3) ALLOWABLE STRESS INCREASE OF 1/3 WAS NOT USED IN THE DESIGN OF THE PRODUCT SHOWN HEREIN. WIND LOAD DURATION FACTOR Cd=1.6 WAS USED FOR WOOD ANCHOR CALCULATIONS.
4) FRAME MATERIAL: ALUMINUM 6063--T6
5) UNITS MUST BE GLAZED PER ASTM E1300. SEE SHEET 6 FOR GLASS OPTIONS.
6) APPROVED IMPACT PROTECTIVE SYSTEM IS NOT REQUIRED FOR THIS PRODUCT IN WIND BORNE DEBRIS REGIONS.
7) FOR DESIGN PRESSURE RATINGS SEE SHEETS 2 AND 3.

PRODUCT RENEWED
as complying with the Florida
Building Code
Acceptance No 10-1102.08
Expiration Date FEB. 23, 2016
By Manuel Perez
Miami Dade Product Control

PRODUCT REVISED
as complying with the Florida
Building Code
Acceptance No 12-0130.21
Expiration Date FEB. 23, 2016
By Manuel Perez
Miami Dade Product Control

TABLE OF CONTENTS

SHEET NO.	DESCRIPTION
1	ELEVATION AND GENERAL NOTES
2 – 3	DESIGN PRESSURE CHARTS
4	ANCHORING LAYOUT AND NOTES
5	BILL OF MATERIALS AND CROSS SECTIONS
6	GLAZING DETAILS
7	INSTALLATION DETAILS
8	COMPONENTS

PRODUCT REVISED
as complying with the Florida
Building Code
Acceptance No 09-0519.13
Expiration Date FEB. 23, 2011
By Manuel Perez
Miami Dade Product Control
Division

WinDoor INCORPORATED
7500 AMSTERDAM DRIVE
ORLANDO, FL 32832
Phone: 407.481.8400
Fax: 407.481.0505
www.windoorinc.com

SERIES 1000 ALUMINUM-FIXED WINDOW – LMI
4'0 x 10'0 AND 5'0 x 8'0
ELEVATION AND GENERAL NOTES

DRAWN:	DWG NO.	REV
TJH	08-00665	–
SCALE NTS	DATE 12/19/08	SHEET 1 OF 8

LUIS R. LOMAS P.E.
Florida No. 62514

REVISIONS			
REV	DESCRIPTION	DATE	APPROVED

Maximum design pressure capacity chart
Series 1000 Aluminum Fixed Window - LMI 48" x 120" with Glazing Type "A"

Height (in)	Panel width (in) 24.0 Pos	24.0 Neg	30.0 Pos	30.0 Neg	36.0 Pos	36.0 Neg	42.0 Pos	42.0 Neg	48.0 Pos	48.0 Neg
24.0	150.0	175.0	150.0	175.0	150.0	175.0	150.0	175.0	150.0	175.0
30.0	150.0	175.0	150.0	175.0	150.0	175.0	150.0	175.0	150.0	175.0
36.0	150.0	175.0	150.0	175.0	150.0	175.0	150.0	175.0	150.0	175.0
42.0	150.0	175.0	150.0	175.0	150.0	175.0	150.0	175.0	150.0	175.0
48.0	150.0	175.0	150.0	175.0	150.0	175.0	150.0	175.0	150.0	175.0
54.0	150.0	175.0	150.0	175.0	150.0	175.0	150.0	175.0	150.0	175.0
60.0	150.0	175.0	150.0	175.0	150.0	175.0	150.0	175.0	150.0	175.0
66.0	150.0	175.0	150.0	175.0	150.0	175.0	150.0	175.0	150.0	175.0
72.0	150.0	175.0	150.0	175.0	150.0	175.0	150.0	175.0	150.0	175.0
78.0	150.0	175.0	150.0	175.0	150.0	175.0	150.0	175.0	150.0	175.0
84.0	150.0	175.0	150.0	175.0	150.0	175.0	150.0	175.0	150.0	175.0
90.0	150.0	175.0	150.0	175.0	150.0	175.0	150.0	175.0	150.0	175.0
96.0	150.0	175.0	150.0	175.0	150.0	175.0	150.0	175.0	150.0	175.0
102.0	150.0	175.0	150.0	175.0	150.0	175.0	150.0	175.0	150.0	175.0
108.0	150.0	175.0	150.0	175.0	150.0	175.0	150.0	175.0	150.0	175.0
114.0	150.0	175.0	150.0	175.0	150.0	175.0	150.0	175.0	150.0	175.0
120.0	150.0	175.0	150.0	175.0	150.0	175.0	150.0	175.0	150.0	175.0

Maximum design pressure capacity chart
Series 1000 Aluminum Fixed Window - LMI 48" x 120" with Glazing Type "B" & "C"

Height (in)	Panel width (in) 24.0 Pos	24.0 Neg	30.0 Pos	30.0 Neg	36.0 Pos	36.0 Neg	42.0 Pos	42.0 Neg	48.0 Pos	48.0 Neg
24.0	134.0	150.0	134.0	150.0	134.0	150.0	134.0	150.0	134.0	150.0
30.0	134.0	150.0	134.0	150.0	134.0	150.0	134.0	150.0	134.0	150.0
36.0	134.0	150.0	134.0	150.0	134.0	150.0	134.0	150.0	134.0	150.0
42.0	134.0	150.0	134.0	150.0	134.0	150.0	134.0	150.0	134.0	150.0
48.0	134.0	150.0	134.0	150.0	134.0	150.0	134.0	150.0	134.0	150.0
54.0	134.0	150.0	134.0	150.0	134.0	150.0	134.0	150.0	134.0	150.0
60.0	134.0	150.0	134.0	150.0	134.0	150.0	134.0	150.0	134.0	142.7
66.0	134.0	150.0	134.0	150.0	134.0	150.0	134.0	143.5	134.0	134.5
72.0	134.0	150.0	134.0	150.0	134.0	150.0	134.0	138.1	128.4	128.4
78.0	134.0	150.0	134.0	150.0	134.0	148.4	133.9	133.9	123.6	123.6
84.0	134.0	150.0	134.0	150.0	134.0	145.3	130.4	130.4	119.8	119.8
90.0	134.0	150.0	134.0	150.0	134.0	142.7	127.6	127.6	116.7	116.7
96.0	134.0	150.0	134.0	150.0	134.0	140.5	125.2	125.2	114.1	114.1
102.0	134.0	150.0	134.0	150.0	134.0	138.6	123.2	123.2	111.9	111.9
108.0	134.0	150.0	134.0	150.0	134.0	137.0	121.4	121.4	110.1	110.1
114.0	134.0	150.0	134.0	150.0	134.0	135.5	119.9	119.9	108.4	108.4
120.0	134.0	150.0	134.0	150.0	134.0	134.3	118.6	118.6	107.0	107.0

Maximum design pressure capacity chart
Series 1000 Aluminum Fixed Window - LMI 48" x 120" with Glazing Type "D"

Height (in)	Panel width (in) 24.0 Pos	24.0 Neg	30.0 Pos	30.0 Neg	36.0 Pos	36.0 Neg	42.0 Pos	42.0 Neg	48.0 Pos	48.0 Neg
24.0	134.0	150.0	134.0	150.0	134.0	150.0	134.0	150.0	134.0	150.0
30.0	134.0	150.0	134.0	150.0	134.0	150.0	134.0	150.0	134.0	150.0
36.0	134.0	150.0	134.0	150.0	134.0	150.0	134.0	150.0	134.0	150.0
42.0	134.0	150.0	134.0	150.0	134.0	150.0	134.0	150.0	134.0	150.0
48.0	134.0	150.0	134.0	150.0	134.0	150.0	134.0	150.0	134.0	150.0
54.0	134.0	150.0	134.0	150.0	134.0	150.0	134.0	150.0	134.0	150.0
60.0	134.0	150.0	134.0	150.0	134.0	150.0	134.0	150.0	134.0	150.0
66.0	134.0	150.0	134.0	150.0	134.0	150.0	134.0	150.0	134.0	150.0
72.0	134.0	150.0	134.0	150.0	134.0	150.0	134.0	150.0	134.0	150.0
78.0	134.0	150.0	134.0	150.0	134.0	150.0	134.0	150.0	134.0	150.0
84.0	134.0	150.0	134.0	150.0	134.0	150.0	134.0	150.0	134.0	150.0
90.0	134.0	150.0	134.0	150.0	134.0	150.0	134.0	150.0	134.0	146.2
96.0	134.0	150.0	134.0	150.0	134.0	150.0	134.0	150.0	134.0	142.9
102.0	134.0	150.0	134.0	150.0	134.0	150.0	134.0	150.0	134.0	140.2
108.0	134.0	150.0	134.0	150.0	134.0	150.0	134.0	150.0	134.0	137.8
114.0	134.0	150.0	134.0	150.0	134.0	150.0	134.0	150.0	134.0	135.8
120.0	134.0	150.0	134.0	150.0	134.0	150.0	134.0	148.5	134.0	134.0

Maximum design pressure capacity chart
Series 1000 Aluminum Fixed Window - LMI 48" x 120" with Glazing Type "E"

Height (in)	Panel width (in) 24.0 Pos	24.0 Neg	30.0 Pos	30.0 Neg	36.0 Pos	36.0 Neg	42.0 Pos	42.0 Neg	48.0 Pos	48.0 Neg
24.0	120.0	150.0	120.0	150.0	120.0	150.0	120.0	150.0	120.0	150.0
30.0	120.0	150.0	120.0	150.0	120.0	150.0	120.0	150.0	120.0	150.0
36.0	120.0	150.0	120.0	150.0	120.0	150.0	120.0	150.0	120.0	150.0
42.0	120.0	150.0	120.0	150.0	120.0	150.0	120.0	150.0	120.0	150.0
48.0	120.0	150.0	120.0	150.0	120.0	150.0	120.0	150.0	120.0	150.0
54.0	120.0	150.0	120.0	150.0	120.0	150.0	120.0	150.0	120.0	150.0
60.0	120.0	150.0	120.0	150.0	120.0	150.0	120.0	150.0	120.0	142.7
66.0	120.0	150.0	120.0	150.0	120.0	150.0	120.0	143.5	120.0	134.5
72.0	120.0	150.0	120.0	150.0	120.0	150.0	120.0	138.1	120.0	128.4
78.0	120.0	150.0	120.0	150.0	120.0	148.4	120.0	133.9	120.0	123.6
84.0	120.0	150.0	120.0	150.0	120.0	145.3	120.0	130.4	119.8	119.8
90.0	120.0	150.0	120.0	150.0	120.0	142.7	120.0	127.6	116.7	116.7
96.0	120.0	150.0	120.0	150.0	120.0	140.5	120.0	125.2	114.1	114.1
102.0	120.0	150.0	120.0	150.0	120.0	138.6	120.0	123.2	111.9	111.9
108.0	120.0	150.0	120.0	150.0	120.0	137.0	120.0	121.4	110.1	110.1
114.0	120.0	150.0	120.0	150.0	120.0	135.5	119.9	119.9	108.4	108.4
120.0	120.0	150.0	120.0	150.0	120.0	134.3	118.6	118.6	107.0	107.0

PRODUCT REVISED
as complying with the Florida
Building Code
Acceptance No 12-0130.21
Expiration Date FEB. 23, 2016
By Manuel Perez
Miami-Dade Product Control

RODUCT RENEWED
as complying with the Florida
Building Code
Acceptance No 10-1102.08
Expiration Date FEB. 23, 2016
By Manuel Perez
Miami-Dade Product Control

PRODUCT REVISED
as complying with the Florida
Building Code
Acceptance No 09-0519.03
Expiration Date FEB. 23, 2011
By Manuel Perez
Miami-Dade Product Control
Division

WinDoor INCORPORATED
7500 AMSTERDAM DRIVE
ORLANDO, FL 32832
Phone: 407.481.8400
Fax: 407.481.0505
www.windoorinc.com

SERIES 1000 ALUMINUM FIXED WINDOW – LMI
4'0 x 10'0 AND 5'0 x 8'0
4'0 x 10'0 DESIGN PRESSURE CHARTS

DRAWN:	DWG NO.	REV
TJH	08-00665	–
SCALE NTS	DATE 12/19/08	SHEET 2 OF 8

Luis R. Lomas
5/13/09

LUIS R. LOMAS P.E.
Florida No. 62514

REVISIONS			
REV	DESCRIPTION	DATE	APPROVED

Maximum design pressure capacity chart
Series 1000 Aluminum Fixed Window - LMI 60" x 96" with Glazing Type "A"

Panel width (in)

Height (in)	24.0		30.0		36.0		42.0		48.0		54.0		60.0	
	Pos	Neg	Pos	Neg	Pos	Neg	Pos	Neg	Pos	Neg	Pos	Neg	Pos	Neg
24.0	150.0	175.0	150.0	175.0	150.0	175.0	150.0	175.0	150.0	175.0	150.0	175.0	150.0	175.0
30.0	150.0	175.0	150.0	175.0	150.0	175.0	150.0	175.0	150.0	175.0	150.0	175.0	150.0	175.0
36.0	150.0	175.0	150.0	175.0	150.0	175.0	150.0	175.0	150.0	175.0	150.0	175.0	150.0	175.0
42.0	150.0	175.0	150.0	175.0	150.0	175.0	150.0	175.0	150.0	175.0	150.0	175.0	150.0	175.0
48.0	150.0	175.0	150.0	175.0	150.0	175.0	150.0	175.0	150.0	175.0	150.0	175.0	150.0	175.0
54.0	150.0	175.0	150.0	175.0	150.0	175.0	150.0	175.0	150.0	175.0	150.0	175.0	150.0	175.0
60.0	150.0	175.0	150.0	175.0	150.0	175.0	150.0	175.0	150.0	175.0	150.0	175.0	150.0	175.0
66.0	150.0	175.0	150.0	175.0	150.0	175.0	150.0	175.0	150.0	175.0	150.0	175.0	150.0	175.0
72.0	150.0	175.0	150.0	175.0	150.0	175.0	150.0	175.0	150.0	175.0	150.0	175.0	150.0	175.0
78.0	150.0	175.0	150.0	175.0	150.0	175.0	150.0	175.0	150.0	175.0	150.0	175.0	150.0	175.0
84.0	150.0	175.0	150.0	175.0	150.0	175.0	150.0	175.0	150.0	175.0	150.0	175.0	150.0	175.0
90.0	150.0	175.0	150.0	175.0	150.0	175.0	150.0	175.0	150.0	175.0	150.0	175.0	150.0	175.0
96.0	150.0	175.0	150.0	175.0	150.0	175.0	150.0	175.0	150.0	175.0	150.0	175.0	150.0	175.0

Maximum design pressure capacity chart
Series 1000 Aluminum Fixed Window - LMI 60" x 96" with Glazing Type "B" & "C"

Panel width (in)

Height (in)	24.0		30.0		36.0		42.0		48.0		54.0		60.0	
	Pos	Neg	Pos	Neg	Pos	Neg	Pos	Neg	Pos	Neg	Pos	Neg	Pos	Neg
24.0	100.0	133.5	100.0	133.5	100.0	133.5	100.0	133.5	100.0	133.5	100.0	133.5	100.0	133.5
30.0	100.0	133.5	100.0	133.5	100.0	133.5	100.0	133.5	100.0	133.5	100.0	133.5	100.0	133.5
36.0	100.0	133.5	100.0	133.5	100.0	133.5	100.0	133.5	100.0	133.5	100.0	133.5	100.0	133.5
42.0	100.0	133.5	100.0	133.5	100.0	133.5	100.0	133.5	100.0	133.5	100.0	133.5	100.0	133.5
48.0	100.0	133.5	100.0	133.5	100.0	133.5	100.0	133.5	100.0	133.5	100.0	133.5	100.0	127.5
54.0	100.0	133.5	100.0	133.5	100.0	133.5	100.0	133.5	100.0	133.5	100.0	133.5	100.0	123.6
60.0	100.0	133.5	100.0	133.5	100.0	133.5	100.0	133.5	100.0	127.5	100.0	123.6	100.0	122.4
66.0	100.0	133.5	100.0	133.5	100.0	133.5	100.0	128.2	100.0	120.2	100.0	115.1	100.0	112.2
72.0	100.0	133.5	100.0	133.5	100.0	133.5	100.0	123.4	100.0	114.7	100.0	108.8	100.0	104.9
78.0	100.0	133.5	100.0	133.5	100.0	132.6	100.0	119.6	100.0	110.5	100.0	104.0	99.4	99.4
84.0	100.0	133.5	100.0	133.5	100.0	129.8	100.0	116.5	100.0	107.1	100.0	100.2	95.2	95.2
90.0	100.0	133.5	100.0	133.5	100.0	127.5	100.0	114.0	100.0	104.3	97.1	97.1	91.8	91.8
96.0	100.0	133.5	100.0	133.5	100.0	125.5	100.0	111.9	100.0	102.0	94.6	94.6	89.0	89.0

Maximum design pressure capacity chart
Series 1000 Aluminum Fixed Window - LMI 60" x 96" with Glazing Type "D"

Panel width (in)

Height (in)	24.0		30.0		36.0		42.0		48.0		54.0		60.0	
	Pos	Neg	Pos	Neg	Pos	Neg	Pos	Neg	Pos	Neg	Pos	Neg	Pos	Neg
24.0	126.0	150.0	126.0	150.0	126.0	150.0	126.0	150.0	126.0	150.0	126.0	150.0	126.0	150.0
30.0	126.0	150.0	126.0	150.0	126.0	150.0	126.0	150.0	126.0	150.0	126.0	150.0	126.0	150.0
36.0	126.0	150.0	126.0	150.0	126.0	150.0	126.0	150.0	126.0	150.0	126.0	150.0	126.0	150.0
42.0	126.0	150.0	126.0	150.0	126.0	150.0	126.0	150.0	126.0	150.0	126.0	150.0	126.0	150.0
48.0	126.0	150.0	126.0	150.0	126.0	150.0	126.0	150.0	126.0	150.0	126.0	150.0	126.0	150.0
54.0	126.0	150.0	126.0	150.0	126.0	150.0	126.0	150.0	126.0	150.0	126.0	150.0	126.0	150.0
60.0	126.0	150.0	126.0	150.0	126.0	150.0	126.0	150.0	126.0	150.0	126.0	150.0	126.0	150.0
66.0	126.0	150.0	126.0	150.0	126.0	150.0	126.0	150.0	126.0	150.0	126.0	150.0	126.0	150.0
72.0	126.0	150.0	126.0	150.0	126.0	150.0	126.0	150.0	126.0	150.0	126.0	150.0	126.0	148.5
78.0	126.0	150.0	126.0	150.0	126.0	150.0	126.0	150.0	126.0	150.0	126.0	147.2	126.0	140.8
84.0	126.0	150.0	126.0	150.0	126.0	150.0	126.0	150.0	126.0	150.0	126.0	141.8	126.0	134.8
90.0	126.0	150.0	126.0	150.0	126.0	150.0	126.0	150.0	126.0	147.7	126.0	137.5	126.0	129.9
96.0	126.0	150.0	126.0	150.0	126.0	150.0	126.0	150.0	126.0	144.4	126.0	133.9	126.0	126.0

Maximum design pressure capacity chart
Series 1000 Aluminum Fixed Window - LMI 60" x 96" with Glazing Type "E"

Panel width (in)

Height (in)	24.0		30.0		36.0		42.0		48.0		54.0		60.0	
	Pos	Neg	Pos	Neg	Pos	Neg	Pos	Neg	Pos	Neg	Pos	Neg	Pos	Neg
24.0	100.0	150.0	100.0	150.0	100.0	150.0	100.0	150.0	100.0	150.0	100.0	150.0	100.0	150.0
30.0	100.0	150.0	100.0	150.0	100.0	150.0	100.0	150.0	100.0	150.0	100.0	150.0	100.0	150.0
36.0	100.0	150.0	100.0	150.0	100.0	150.0	100.0	150.0	100.0	150.0	100.0	150.0	100.0	150.0
42.0	100.0	150.0	100.0	150.0	100.0	150.0	100.0	150.0	100.0	150.0	100.0	150.0	100.0	150.0
48.0	100.0	150.0	100.0	150.0	100.0	150.0	100.0	150.0	100.0	150.0	100.0	150.0	100.0	150.0
54.0	100.0	150.0	100.0	150.0	100.0	150.0	100.0	150.0	100.0	150.0	100.0	150.0	100.0	148.6
60.0	100.0	150.0	100.0	150.0	100.0	150.0	100.0	150.0	100.0	150.0	100.0	148.6	100.0	147.1
66.0	100.0	150.0	100.0	150.0	100.0	150.0	100.0	150.0	100.0	144.5	100.0	138.3	100.0	134.9
72.0	100.0	150.0	100.0	150.0	100.0	150.0	100.0	148.4	100.0	137.9	100.0	130.8	100.0	126.1
78.0	100.0	150.0	100.0	150.0	100.0	150.0	100.0	143.8	100.0	132.8	100.0	125.0	100.0	119.5
84.0	100.0	150.0	100.0	150.0	100.0	150.0	100.0	140.1	100.0	128.7	100.0	120.5	100.0	114.4
90.0	100.0	150.0	100.0	150.0	100.0	150.0	100.0	137.1	100.0	125.4	100.0	116.8	100.0	110.3
96.0	100.0	150.0	100.0	150.0	100.0	150.0	100.0	134.5	100.0	122.6	100.0	113.7	100.0	107.0

PRODUCT REVISED
as complying with the Florida
Building Code
Acceptance No 12-0130.21
Expiration Date FEB. 23, 2016
By Manuel Perez
Miami Dade Product Control

PRODUCT RENEWED
as complying with the Florida
Building Code
Acceptance No. 10-1102.08
Expiration Date FEB. 23, 2016
By Manuel Perez
Miami Dade Product Control

PRODUCT REVISED
as complying with the Florida
Building Code
Acceptance No 09-0519.13
Expiration Date FEB. 28, 2011
By Manuel Perez
Miami Dade Product Control
Division

WinDoor INCORPORATED
7500 AMSTERDAM DRIVE
ORLANDO, FL 32832
Phone: 407.481.8400
Fax: 407.481.0505
www.windoorinc.com

SERIES 1000 ALUMINUM FIXED WINDOW – LMI
4'0 x 10'0 AND 5'0 x 8'0
5'0 x 8'0 DESIGN PRESSURE CHARTS

DRAWN:	DWG NO.	REV
TJH	08-00665	–
SCALE NTS	DATE 12/19/08	SHEET 3 OF 8

5/12/09

LUIS R. LOMAS P.E.
Florida No. 62514

REVISIONS			
REV	DESCRIPTION	DATE	APPROVED

FRAME CONSTRUCTION:
FRAMES ARE CONSTRUCTED FROM EXTRUDED 6063-T6 ALUMINUM. VERTICAL STILES ARE NOTCHED TO RECEIVE HORIZONTAL RAILS. EACH RAIL IS SECURED TO STILES WITH (2) #10 x 1 1/4" SQ. DRIVE SCREW AT EACH END, B.O.M. ITEM #10. ALL FRAMES USE A FIXED GLASS STOP ON THE EXTERIOR AND AN APPLIED GLASS STOP ON THE INTERIOR.

ANCHORING NOTES:

1) THERE IS ONE INSTALLATION ANCHORS AT EACH INSTALLATION ANCHOR LOCATION IN HEAD, SILL AND JAMBS.
2) FOR ANCHORING INTO MASONRY/CONCRETE THROUGH A PROPERLY SECURED 1X NON-STRUCTURAL WOOD BUCK USE 1/4" ELCO CRETE-FLEX SS4 MASONRY SCREW WITH SUFFICIENT LENGTH TO ACHIEVE A 1 1/4" MINIMUM EMBEDMENT INTO SUBSTRATE WITH 1 3/4" MINIMUM EDGE DISTANCE. LOCATE ANCHORS AS SHOWN IN ELEVATIONS AND INSTALLATION DETAILS.
3) FOR ANCHORING INTO WOOD FRAMING, 2X BUCK OR WOOD BACKED 20GA. MINIMUM STEEL STUD USE #14 CUT THREAD WOOD SCREW WITH SUFFICIENT LENGTH TO ACHIEVE A 1 3/8" MINIMUM EMBEDMENT INTO SUBSTRATE. LOCATE ANCHORS AS SHOWN IN ELEVATIONS AND INSTALLATION DETAILS.
4) SHIM AS REQUIRED AT EACH INSTALLATION ANCHOR WITH LOAD BEARING SHIM. SHIM WHERE SPACE OF 1/16" OR GREATER OCCURS. MAXIMUM ALLOWABLE SHIM STACK TO BE 1/4".
5) ALL FASTENERS TO BE CORROSION RESISTANT.
6) INSTALLATION ANCHORS SHALL BE INSTALLED IN ACCORDANCE WITH ANCHOR MANUFACTURER'S INSTALLATION INSTRUCTIONS, AND ANCHORS SHALL NOT BE USED IN SUBSTRATES WITH STRENGTHS LESS THAN THE MINIMUM STRENGTH SPECIFIED BELOW:
   A. WOOD – MINIMUM SPECIFIC GRAVITY OF G=0.42
   B. CONCRETE – MINIMUM COMPRESSIVE STRENGTH OF 3,200 PSI.
   C. MASONRY – STRENGTH CONFORMANCE TO ASTM C-90, GRADE N, TYPE 1 (OR GREATER).
   D. METAL FRAMING – 20GA (.040) MINIMUM THICKNESS

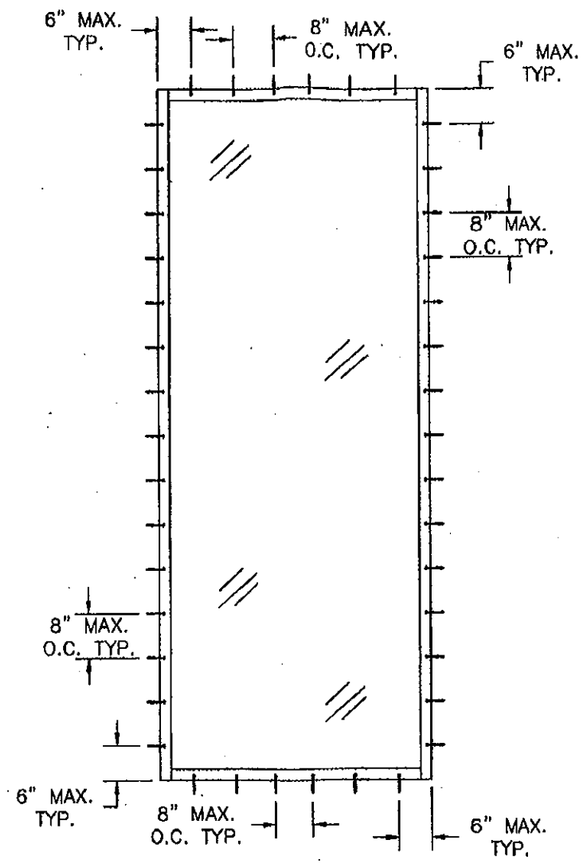

SERIES 1000 FW – LMI
4'0 x 10'0 ANCHORING

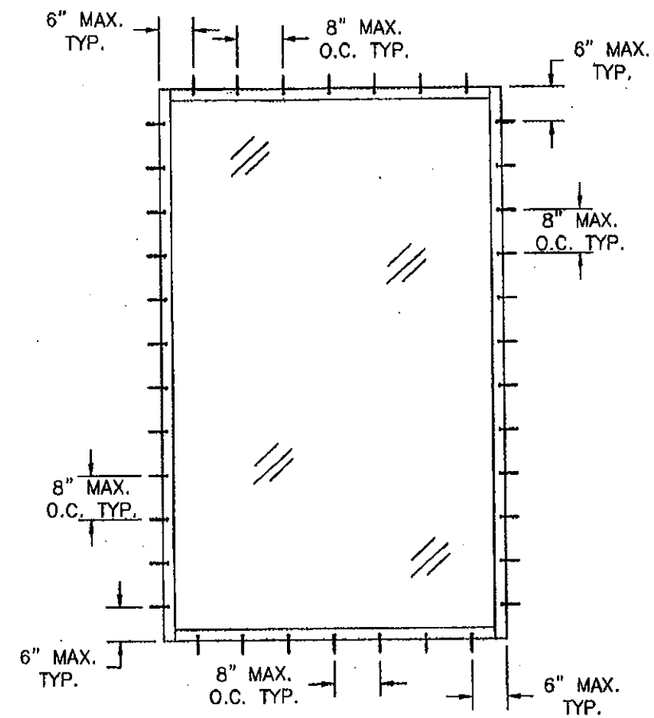

SERIES 1000 FW – LMI
5'0 x 8'0 ANCHORING

PRODUCT REVISED
as complying with the Florida
Building Code
Acceptance No 12-0130.21
Expiration Date FEB. 25, 2016
By Manuel Perez
Miami Dade Product Control

PRODUCT RENEWED
as complying with the Florida
Building Code
Acceptance No 10-1102.08
Expiration Date FEB. 25, 2016
By Manuel Perez
Miami Dade Product Control

PRODUCT REVISED
as complying with the Florida
Building Code
Acceptance No 09-0519.13
Expiration Date FEB. 25, 2011
By Manuel Perez
Miami Dade Product Control
Division

WinDoor INCORPORATED
7500 AMSTERDAM DRIVE
ORLANDO, FL 32832
Phone: 407.481.8400
Fax: 407.481.0505
www.windoorinc.com

SERIES 1000 ALUMINUM FIXED WINDOW – LMI
4'0 x 10'0 AND 5'0 x 8'0
ANCHORING LAYOUTS AND NOTES

DRAWN:	DWG NO.	REV
TJH	08-00665	–
SCALE NTS	DATE 12/19/08	SHEET 4 OF 8

Luis R. Lomas
5/13/09

LUIS R. LOMAS P.E.
Florida No. 62514

PARTS LIST				
NO.	PART NUMBER	DESCRIPTION	MANUFACTURER	MATERIAL
1	FH-02485	HEAD, SILL & JAMB FRAME	KEYMARK	ALUMINUM 6063-T6
2	FS-02862	FLUSH FRAME PLATE	KEYMARK	ALUMINUM 6063-T6
3	FS-01882	INSERT	KEYMARK	ALUMINUM 6063-T6
4	FS-02861	1 5/16" INSULATED GLASS STOP	KEYMARK	ALUMINUM 6063-T6
5	FS-02478	1" INSULATED GLASS STOP	KEYMARK	ALUMINUM 6063-T6
6	FS-02479	9/16" GLASS STOP	KEYMARK	ALUMINUM 6063-T6
7	GS-VN-07A	VINYL GLASS STOP		
8	SIKAFAST 552	GLAZING COMPOUND	SIKA CORP.	POLYURETHANE
9		GLAZING, SEE SHT. 6 FOR DETAILS		
10		#10 x 1 1/4" PH SQU. DR. SCREW		18-8 STAINLESS STL
11		#10 x 1 1/4" PPH SCREW		18-8 STAINLESS STL
12		1/4" ELCO CRETE-FLEX SS4		STAINLESS STEEL
13		#14 CUT THREAD WOOD SCREW		STAINLESS STEEL

REVISIONS			
REV	DESCRIPTION	DATE	APPROVED

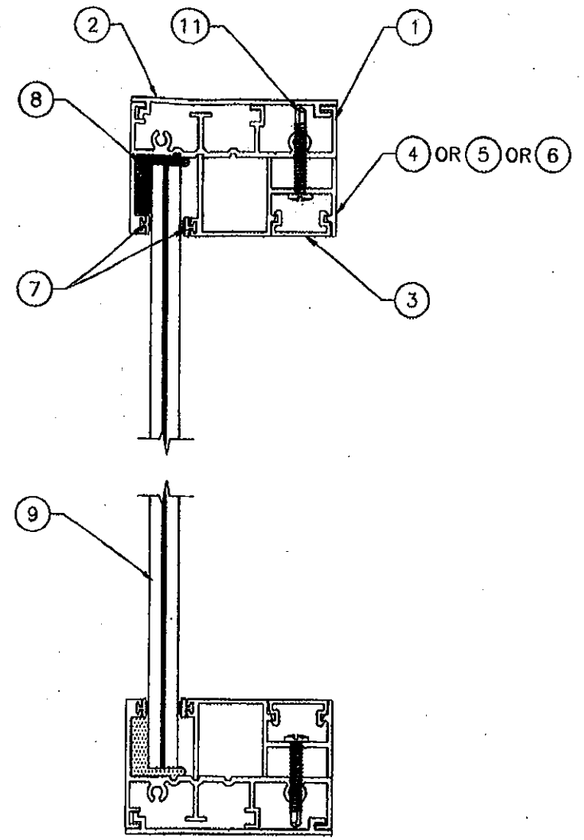

VERTICAL CROSS SECTION A
SERIES 1000 FW – LMI

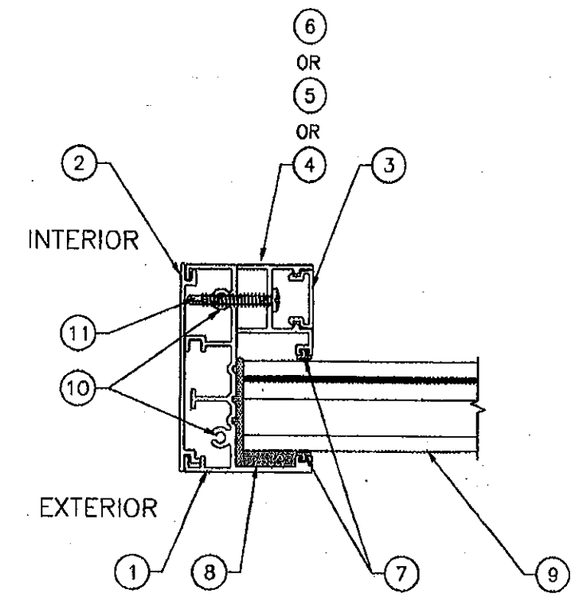

HORIZONTAL CROSS SECTION B
SERIES 1000 FW – LMI

PRODUCT REVISED
as complying with the Florida Building Code
Acceptance No 12-0130.21
Expiration Date FEB. 23, 2016
By Manuel Sosa
Miami-Dade Product Control

PRODUCT RENEWED
as complying with the Florida Building Code
Acceptance No 10-1107.08
Expiration Date FEB. 23, 2016
By Manuel Sosa
Miami-Dade Product Control

PRODUCT REVISED
as complying with the Florida Building Code
Acceptance No 09-0519.13
Expiration Date FEB. 23, 2011
By Manuel Sosa
Miami-Dade Product Control Division

WinDoor INCORPORATED
7500 AMSTERDAM DRIVE
ORLANDO, FL 32832
Phone: 407.481.8400
Fax: 407.481.0505
www.windoorinc.com

SERIES 1000 ALUMINUM FIXED WINDOW – LMI
4'0 x 10'0 AND 5'0 x 8'0
BILL OF MATERIALS AND CROSS SECTIONS

DRAWN: TJH	DWG NO. 08-00665	REV –
SCALE NTS	DATE 12/19/08	SHEET 5 OF 8

Luis R. Lomas
5/12/09

LUIS R. LOMAS P.E.
Florida No. 62514

REVISIONS			
REV	DESCRIPTION	DATE	APPROVED

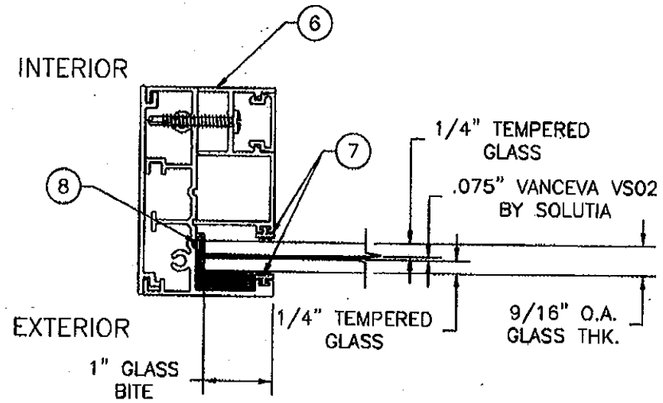

GLAZING TYPE A
9/16" LAMINATED TEMPERED GLASS W/0.075" VANCEVA VS02 BY SOLUTIA

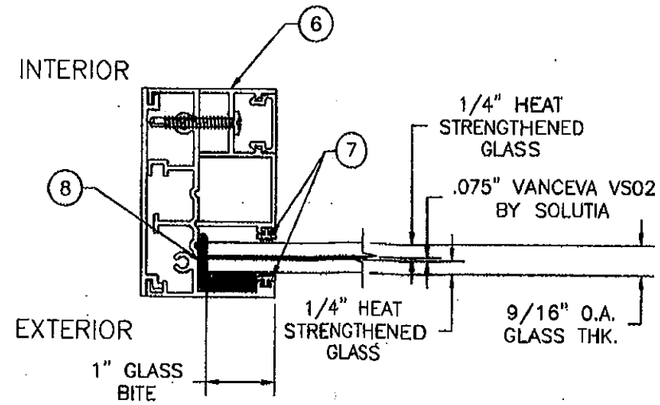

GLAZING TYPE B
9/16" LAMINATED HEAT STRENGTHENED GLASS W/0.075" VANCEVA VS02 BY SOLUTIA

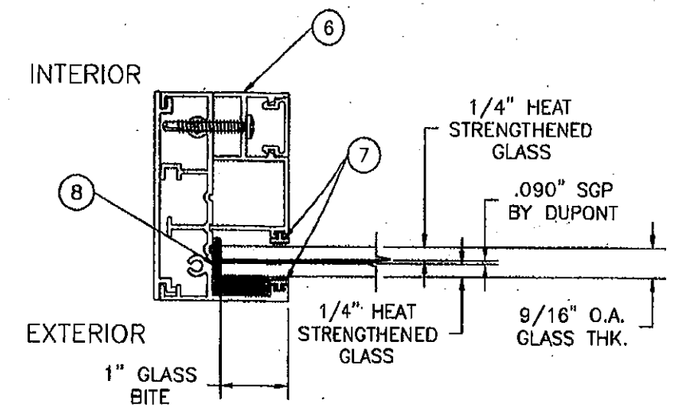

GLAZING TYPE C
9/16" LAMINATED HEAT STRENGTHENED GLASS W/0.090" SGP BY DUPONT

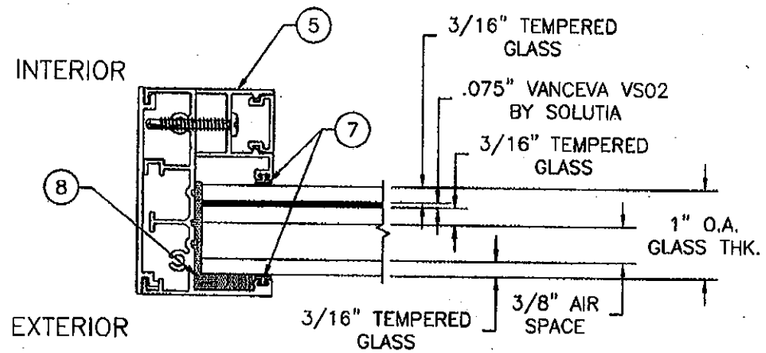

GLAZING TYPE D
1" IGU LAMINATED TEMPERED GLASS W/0.075" VANCEVA BY SOLUTIA

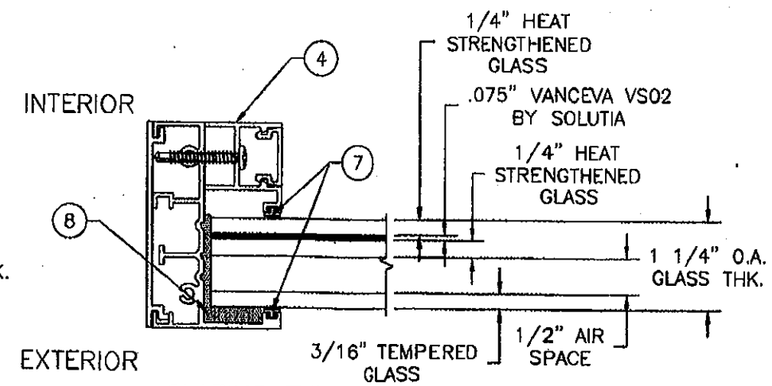

GLAZING TYPE D
1 1/4" IGU LAMINATED TEMPERED/HEAT STRENGTHENED GLASS W/0.075" VANCEVA BY SOLUTIA

PRODUCT REVISED
as complying with the Florida Building Code
Acceptance No 12-0130.21
Expiration Date FEB. 23, 2016
By Manuel Perez
Miami-Dade Product Control

PRODUCT RENEWED
as complying with the Florida Building Code
Acceptance No 10-1102.08
Expiration Date FEB. 23, 2016
By Manuel Perez
Miami-Dade Product Control

PRODUCT REVISED
as complying with the Florida Building Code
Acceptance No 09-0519.13
Expiration Date FEB. 23, 2011
By Manuel Perez
Miami-Dade Product Control Division

WinDoor INCORPORATED
7500 AMSTERDAM DRIVE
ORLANDO, FL 32832
Phone: 407.481.8400
Fax: 407.481.0505
www.windoorinc.com

SERIES 1000 ALUMINUM FIXED WINDOW - LMI
4'0 x 10'0 AND 5'0 x 8'0
GLAZING DETAILS

DRAWN:	DWG NO.	REV
TJH	08-00665	–
SCALE NTS	DATE 12/19/08	SHEET 6 OF 8

Luis R. Lomas
5/13/09

LUIS R. LOMAS P.E.
Florida No. 62514

REVISIONS			
REV	DESCRIPTION	DATE	APPROVED

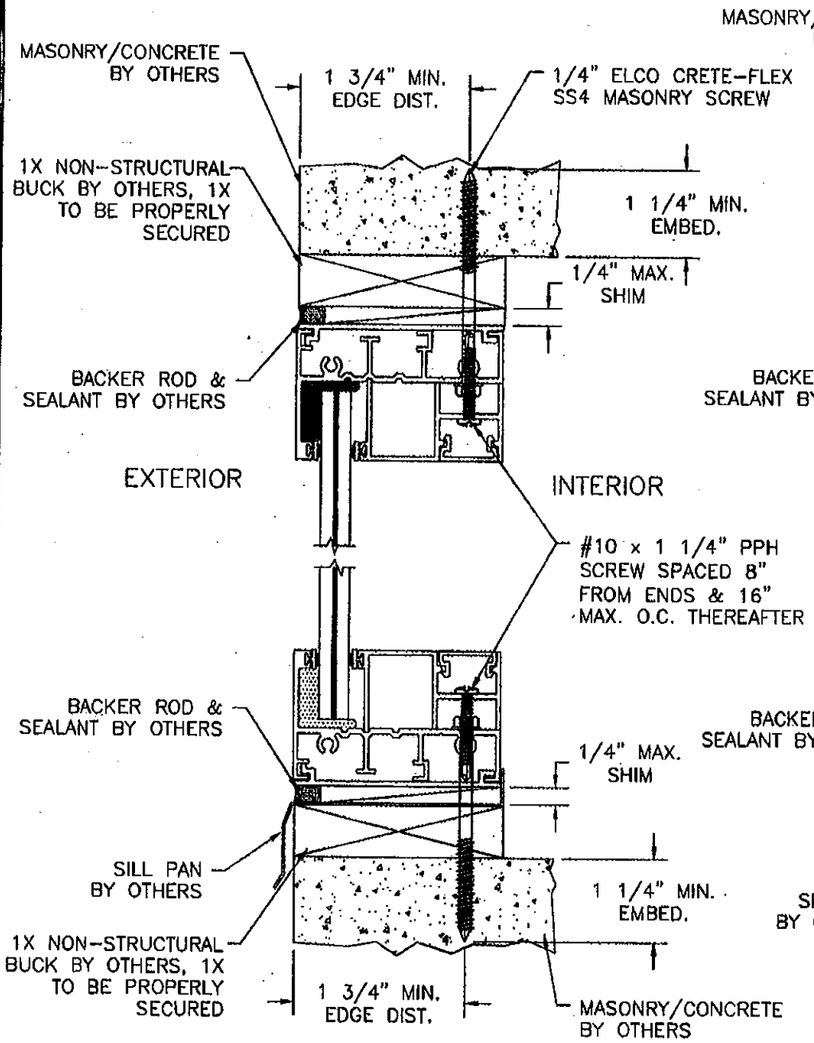

1000 SERIES LMI FW

1X BUCK TO MASONRY/CONCRETE INSTALLATION, HEAD & SILL SHOWN JAMB INSTALLATION IS SAME AS HEAD

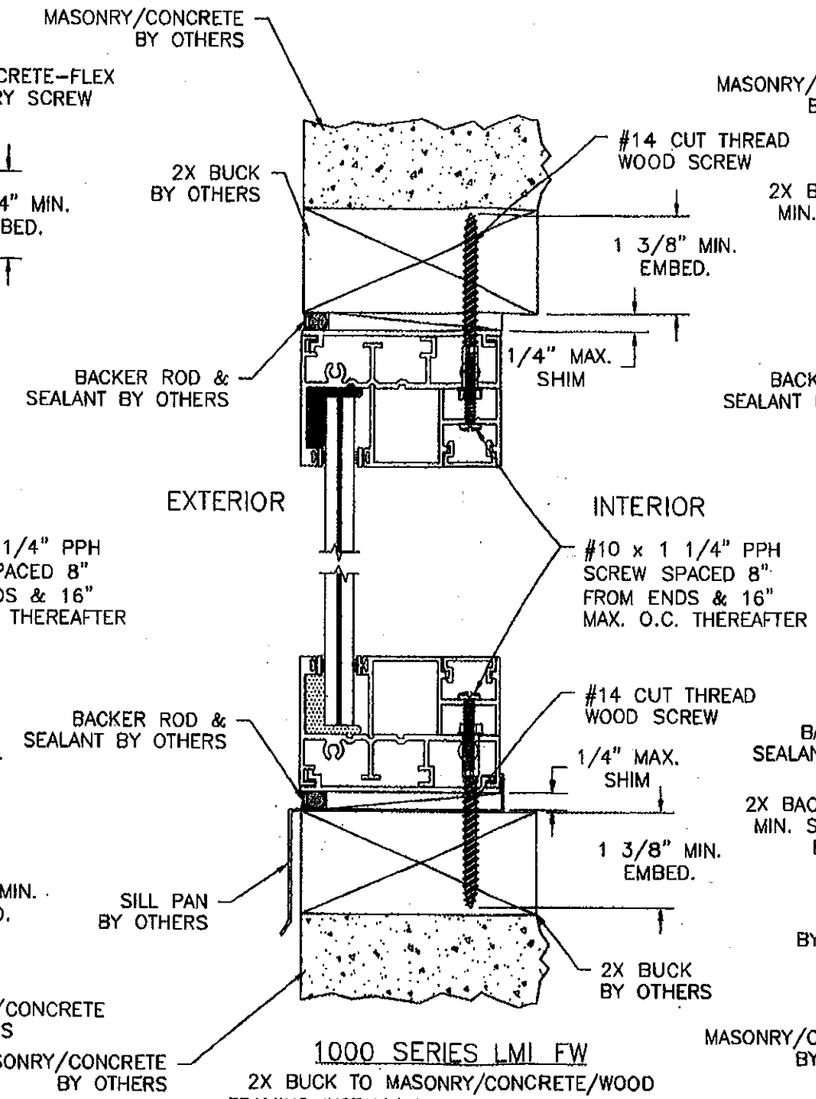

1000 SERIES LMI FW

2X BUCK TO MASONRY/CONCRETE/WOOD FRAMING INSTALLATION, HEAD & SILL SHOWN JAMB INSTALLATION IS SAME AS HEAD

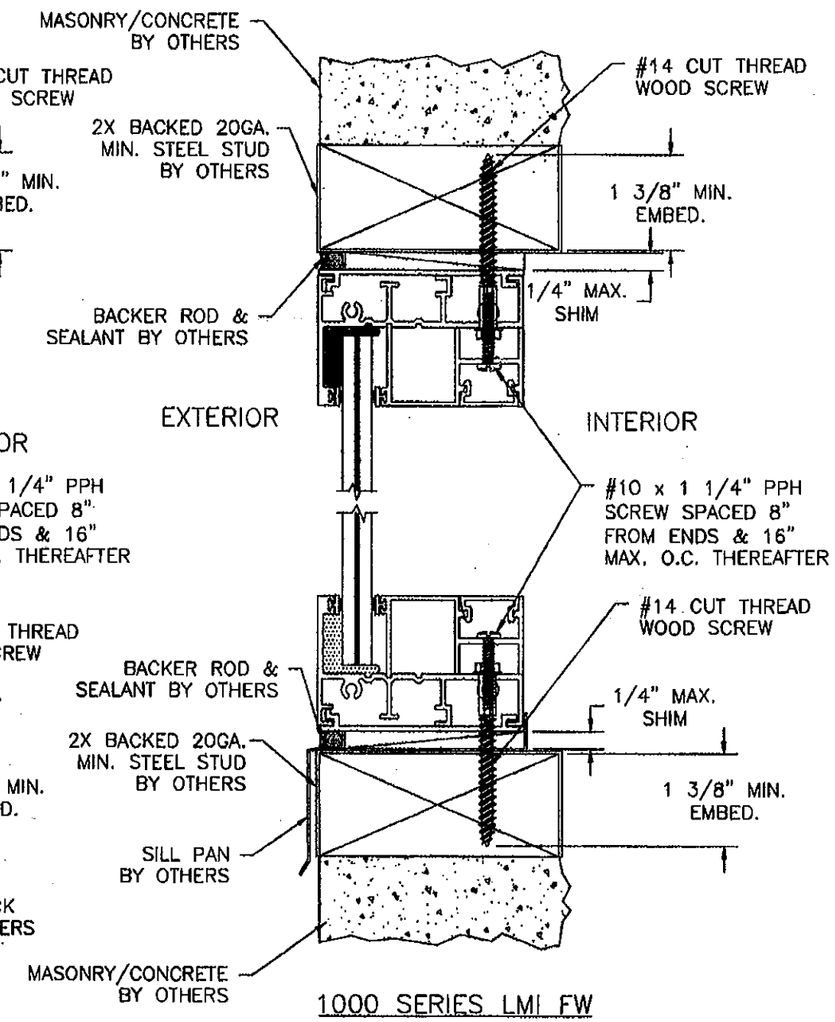

1000 SERIES LMI FW

2X BACKED STEEL STUD INSTALLATION, HEAD & SILL SHOWN JAMB INSTALLATION IS SAME AS HEAD

PRODUCT REVISED
as complying with the Florida Building Code
Acceptance No 12-0130.21
Expiration Date FEB.23,2016
By Manuel Serra
Miami-Dade Product Control

PRODUCT RENEWED
as complying with the Florida Building Code
Acceptance No 10-1102.08
Expiration Date FEB.23,2016
By Manuel Serra
Miami-Dade Product Control

PRODUCT REVISED
as complying with the Florida Building Code
Acceptance No 09-0519.13
Expiration Date FEB.23,2011
By Manuel Serra
Miami-Dade Product Control Division

WinDoor INCORPORATED
7500 AMSTERDAM DRIVE
ORLANDO, FL 32832
Phone: 407.481.8400
Fax: 407.481.0503
www.windoorinc.com

SERIES 1000 ALUMINUM FIXED WINDOW – LMI
4'0 x 10'0 AND 5'0 x 8'0
INSTALLATION DETAILS

DRAWN:	DWG NO.	REV
TJH	08-00665	–
SCALE NTS / DATE 12/19/08	SHEET 7 OF 8	

Luis R. Lomas 5/13/09

LUIS R. LOMAS P.E.
Florida No. 62514

REVISIONS			
REV	DESCRIPTION	DATE	APPROVED

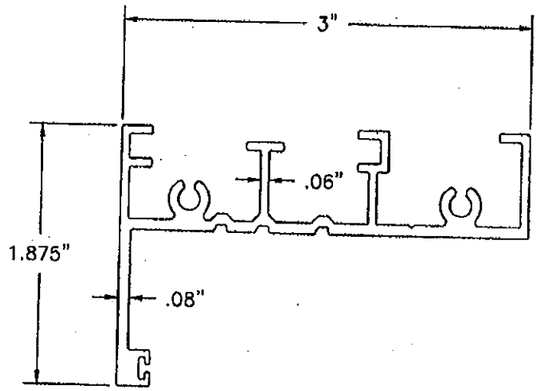

1 HEAD, SILL & JAMB FRAME
6063-T6 ALUM.

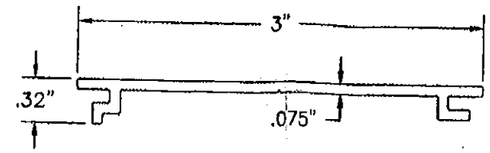

2 FLUSH FRAME PLATE
6063-T6 ALUM.

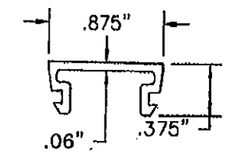

3 INSERT
6063-T6 ALUM.

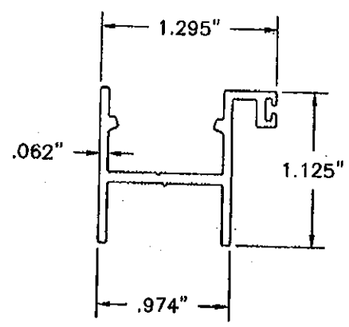

4 1 5/16" INSULATED GLASS STOP
6063-T6 ALUM.

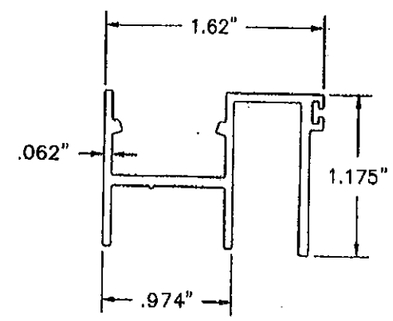

5 1" INSULATED GLASS STOP
6063-T6 ALUM.

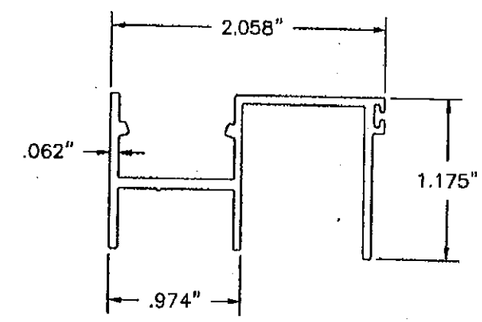

6 9/16" GLASS STOP
6063-T6 ALUM.

PRODUCT REVISED
as complying with the Florida Building Code
Acceptance No 12-0130.21
Expiration Date FEB.23.2016
By Manuel Perez
Miami Dade Product Control

PRODUCT RENEWED
as complying with the Florida Building Code
Acceptance No 10-1102.08
Expiration Date FEB.23.2016
By Manuel Perez
Miami Dade Product Control

PRODUCT REVISED
as complying with the Florida Building Code
Acceptance No 09-0519.13
Expiration Date FEB.23.2011
By Manuel Perez
Miami Dade Product Control Division

WinDoor INCORPORATED
7500 AMSTERDAM DRIVE
ORLANDO, FL 32832
Phone: 407.481.8400
Fax: 407.481.0505
www.windoorinc.com

SERIES 1000 ALUMINUM FIXED WINDOW - LMI
4'0 x 10'0 AND 5'0 x 8'0
COMPONENTS

DRAWN: TJH	DWG NO. 08-00665	REV -
SCALE NTS	DATE 12/19/08	SHEET 8 OF 8

LUIS R. LOMAS P.E.
Florida No. 62514