MIAMI-DADE COUNTY
DEPARTMENT OF PERMITTING, ENVIRONMENT, AND REGULATORY AFFAIRS (PERA)
BOARD AND CODE ADMINISTRATION DIVISION

MIAMI-DADE COUNTY
PRODUCT CONTROL SECTION
11805 SW 26 Street, Room 208
Miami, Florida 33175-2474
T (786) 315-2590 F (786) 315-2599
www.miamidade.gov/pera/

NOTICE OF ACCEPTANCE (NOA)

EGS International, LLC
3133 S.W. 25th Street
Pembroke Park, FL 33009

SCOPE:

This NOA is being issued under the applicable rules and regulations governing the use of construction materials. The documentation submitted has been reviewed and accepted by Miami-Dade County PERA -Product Control Section to be used in Miami Dade County and other areas where allowed by the Authority Having Jurisdiction (AHJ).

This NOA shall not be valid after the expiration date stated below. The Miami-Dade County Product Control Section (In Miami Dade County) and/or the AHJ (in areas other than Miami Dade County) reserve the right to have this product or material tested for quality assurance purposes. If this product or material fails to perform in the accepted manner, the manufacturer will incur the expense of such testing and the AHJ may immediately revoke, modify, or suspend the use of such product or material within their jurisdiction. PERA reserves the right to revoke this acceptance, if it is determined by Miami-Dade County Product Control Section that this product or material fails to meet the requirements of the applicable building code.

This product is approved as described herein, and has been designed to comply with the Florida Building Code, including the High Velocity Hurricane Zone.

DESCRIPTION: Atlantic Series Aluminum Sliding Glass Door – S.M.I.

APPROVAL DOCUMENT: Drawing No. **W04-80 Rev F**, titled "Atlantic Series SMI 130 Alum Sliding Glass Door", sheets 1 through 8 of 8, prepared by AL-Farooq Corporation, dated 09/10/04 and last revised on MAY 17, 2012, signed and sealed by Javad Ahmad, P.E., bearing the Miami-Dade County Product Control Revision stamp with the Notice of Acceptance number and expiration date by the Miami-Dade County Product Control Section.

MISSILE IMPACT RATING: Small Missile Impact Resistant

Limitations:

1. See Design Pressure (DP) ratings with glass types & Reinforcing in sheet 2. See DP ratings of anchor types in sheet 3. Lower Design Pressure Ratings shall apply to entire system.
2. Positive (Exterior) DP shall be limited to sill height per sheet 2.
3. All SGD doors containing operable panel (X) require channel reinf (item #31) at Bottom Rails.

LABELING: Each unit shall bear a permanent label with the manufacturer's name or logo, city, state and series and following statement: "Miami-Dade County Product Control Approved", noted herein.

RENEWAL of this NOA shall be considered after a renewal application has been filed and there has been no change in the applicable building code negatively affecting the performance of this product.

TERMINATION of this NOA will occur after the expiration date or if there has been a revision or change in the materials, use, and/or manufacture of the product or process. Misuse of this NOA as an endorsement of any product, for sales, advertising or any other purposes shall automatically terminate this NOA. Failure to comply with any section of this NOA shall be cause for termination and removal of NOA.

ADVERTISEMENT: The NOA number preceded by the words Miami-Dade County, Florida, and followed by the expiration date may be displayed in advertising literature. If any portion of the NOA is displayed, then it shall be done in its entirety.

INSPECTION: A copy of this entire NOA shall be provided to the user by the manufacturer or its distributors and shall be available for inspection at the job site at the request of the Building Official.

This NOA **revises NOA # 09-0520.08** and consists of this page 1 and evidence pages E-1, as well as approval document mentioned above.

The submitted documentation was reviewed by **Ishaq I. Chanda, P.E.**

MIAMI-DADE COUNTY APPROVED

7/16/12

NOTICE OF ACCEPTANCE: EVIDENCE SUBMITTED

A. DRAWINGS

1. Manufacturer's die drawings and sections (transferred from file # **09-0520.08**)
2. Drawing No. **W04-64 Rev F**, titled "Atlantic Series LM 130 Alum Sliding Glass Door", sheets 1 through 8 of 8, prepared by AL-Farooq Corporation, dated 07/07/04 and last revised on MAY 17, 2012, signed and sealed by Javad Ahmad, P.E.

B. TESTS (transferred from file # 09-0520.08)

1. Test reports on: 1) Uniform Static Air Pressure Test, Loading per FBC, TAS 202-94
   2) Large Missile Impact Test per FBC, TAS 201-94
   3) Small Missile Impact Test per FBC, TAS 201-94
   4) Cyclic Wind Pressure Loading per FBC, TAS 203-94

   along with marked-up drawings and installation diagram of an aluminum sliding glass door, prepared by Fenestration Testing Laboratory, Inc., Test Report No. **FTL-5728**, dated 10/10/08, signed and sealed by Carlos Rionda, P.E.
2. Test reports on: 1) Air Infiltration Test, per FBC, TAS 202-94
   2) Uniform Static Air Pressure Test, Loading per FBC TAS 202-94
   3) Water Resistance Test, per FBC, TAS 202-94
   4) Small Missile Impact Test per FBC, TAS 201-94
   5) Cyclic Wind Pressure Loading per FBC, TAS 203-94
   6) Forced Entry Test, per FBC 2411 3.2.1, TAS 202-94

   along with marked-up drawings and installation diagram of an aluminum sliding glass door, prepared by Fenestration Testing Laboratory, Inc., Test Report No. **FTL-2652**, dated 05/15/00, signed and sealed by Aldo P. Gonzales, P. E.

C. CALCULATIONS

1. Anchor verification calculations and structural analysis, complying with FBC-2010, prepared by Al Farooq Corporation, dated 01/18/12 and revised on MAY 17, 2012, signed and sealed by Javad Ahmad, P.E.
2. Anchor verification calculations and structural analysis, complying with FBC-2007, prepared by Al Farooq Corporation, dated 3/24/09 dated and signed and sealed by Arshad Viqar, P.E. (transferred from file # **09-0520.08**)
3. Glazing complies w/ ASTME-1300-02 & -04

D. QUALITY ASSURANCE

1. Miami Dade Department of Permitting, Environment, and Regulatory Affairs (PERA).

E. MATERIAL CERTIFICATIONS

1. Notice of Acceptance No. **11-0325.05** issued to Solutia, Inc. for their "**Saflex clear & color interlayer**", expiring on 05/21/16.

F. STATEMENTS

1. Statement letter of conformance to FBC 2010and letter of no financial interest, prepared by Al Farooq Corporation, dated 01/26/12, signed and sealed by Javad Ahmad, P.E.
2. Lab compliance as part of the above referenced test report.

G. OTHER

1. This NOA **revises** NOA # **09-0520.08**, expiring on DEC 30, 2014.
2. Commitment letter dated May 10, 2012, issued by EGS, Int'l. for one (1) unit future test including OOX and OXO SGD conditions per TAS 201, 202 (STR) & 203-LMI, signed by R. R. LaViolette (Test will serve both LMI/SMI files).

Ishaq I. Chanda

Ishaq I. Chanda, P.E.
Product Control Examiner
NOA No 12-0131.15
Expiration Date: December 30, 2014
Approval Date: July 27, 2012

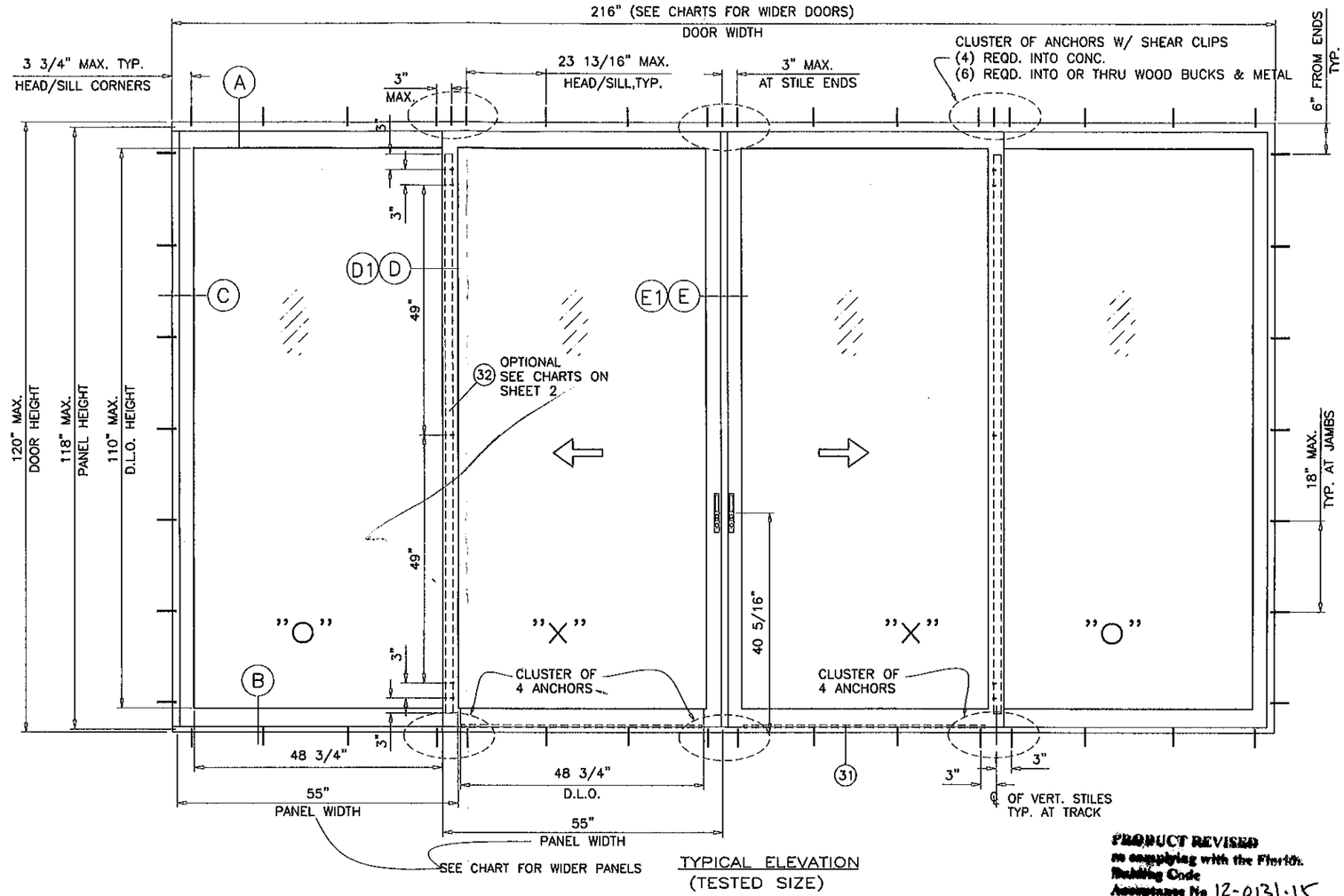

TYPICAL ELEVATION
(TESTED SIZE)

DAYLITE OPENINGS:
D.L.O. HEIGHT = PANEL HEIGHT − 8.875"
D.L.O. WIDTH = PANE
PANEL HEIGHT = DOOR HEIGHT − 2"

THESE DOORS ARE RATED FOR SMALL MISSILE IMPACT.
MIAMI-DADE COUNTY APPROVED IMPACT RESISTANT SHUTTERS REQUIRED FOR INSTALLATIONS UP TO 30 FT. OF GRADE.
SHUTTERS NOT REQD. FOR INSTALLATIONS ABOVE 30 FT. OF GRADE.

ATLANTIC SERIES SMI 130 ALUM. SLIDING GLASS DOOR

SEE SHEET 2 FOR DESIGN LOAD CAPACITY OF DESIRED GLASS/REINF.

USING CHART ON SHEET 3 SELECT ANCHOR OPTION WITH DESIGN RATING MORE THAN DESIGN LOADS REQUIRED.

LOWER DESIGN PRESSURES FROM GLASS OR ANCHOR CHARTS WILL APPLY TO ENTIRE SYSTEM.

THIS PRODUCT HAS BEEN DESIGNED AND TESTED TO COMPLY WITH THE REQUIREMENTS OF THE FLORIDA BUILDING CODE INCLUDING HIGH VELOCITY HURRICANE ZONE (HVHZ).

1BY OR 2BY WOOD BUCKS BY OTHERS, MUST BE ANCHORED PROPERLY TO TRANSFER LOADS TO THE STRUCTURE.

ANCHORS SHALL BE AS LISTED, SPACED AS SHOWN ON DETAILS, ANCHORS EMBEDMENT TO BASE MATERIAL SHALL BE BEYOND WALL DRESSING OR STUCCO.

ANCHORING OR LOADING CONDITIONS NOT SHOWN IN THESE DETAILS ARE NOT PART OF THIS APPROVAL.

A LOAD DURATION INCREASE IS USED IN DESIGN OF ANCHORS INTO WOOD ONLY.

MATERIALS INCLUDING BUT NOT LIMITED TO STEEL/METAL SCREWS, THAT COME INTO CONTACT WITH OTHER DISSIMILAR MATERIALS SHALL MEET THE REQUIREMENTS OF THE FLORIDA BLDG. CODE SECTION 2003.8.4.

PRODUCT REVISED
in complying with the Florida Building Code
Acceptance No. 12-0131.15
Expiration Date DEC 30, 2014
By [signature]
Miami-Dade Product Control

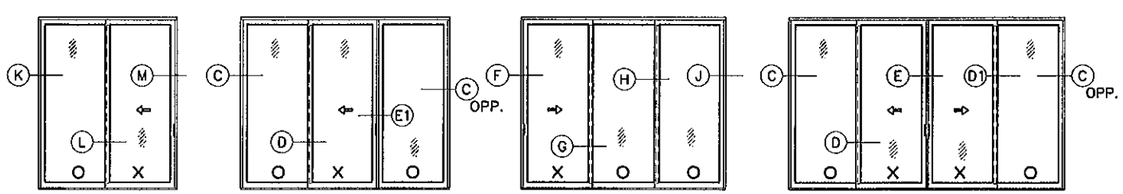

OX (SHOWN)
XO

OXO (SHOWN)
OXO

XOO (SHOWN)
OOX
XOX

OXXO (SHOWN)

APPROVED CONFIGURATIONS

TWO TRACK FRAME DOOR CONFIGURATIONS OF MORE THAN FOUR PANELS USING STILE COMBINATIONS SHOWN IN THESE DETAILS MAY ALSO BE APPROVED (EXAMPLE OOXXOO).

ALL DOOR INSTALLATIONS MUST BE IN ACCORDANCE WITH EGS INSTALLATION INSTRUCTIONS.
ALL SEALANTS TO BE TREMCO SPECTREM 2 OR EQUAL. (EQUAL SEALANTS MUST BE TESTED BY SEALANT MANUFACTURER FOR COMPATIBILITY & ADHESION).

Engr: JAVAD AHMAD
CIVIL
FLA. PE # 70592
C.A.N. 3538

MAY 17 2012

AL-FAROOQ CORPORATION
ENGINEERS & PRODUCT DEVELOPMENT
1235 S.W. 87 AVE
MIAMI, FLORIDA 33174
TEL. (305) 264-8100 FAX. (305) 262-6978

EGS\SMI\W04-80EGS

ATLANTIC SERIES SMI 130 ALUM. SLIDING GLASS DOOR

EGS INTERNATIONAL, LLC
3133 S.W. 25TH STREET
PEMBROKE PARK, FL. 33009
TEL. (954) 964-1441 FAX. (954) 964-1533

revisions:

no	date	by	description
C	03.25.09		UPDATED FOR 2007 FBC
D	10.05.09		NO CHANGE THIS SHEET
E	11.14.11		UPDATED TO 2010 FBC
F	05.14.12		REV. PER PERA COMMENTS

date: 9-10-04
scale: 1/2"=1'-0"
dr. by: KAY
chk. by:

drawing no.
W04-80

DESIGN LOAD CAPACITY – PSF (GLASS)					
PANEL WIDTH NOMINAL INCHES	DOOR HEIGHT INCHES	W/O REINF'D INTERLOCKS		WITH REINF'D INTERLOCKS	
		EXT.(+)	INT.(–)	EXT.(+)	INT.(–)
24	84	80.0	160.0	130.0	130.0
30		80.0	160.0	130.0	130.0
36		80.0	160.0	130.0	130.0
39–1/4		80.0	160.0	130.0	130.0
42		80.0	160.0	130.0	130.0
48		80.0	130.0	130.0	130.0
50		80.0	130.0	130.0	130.0
54		80.0	130.0	130.0	130.0
56		80.0	130.0	130.0	130.0
60		80.0	130.0	130.0	130.0
24	90	80.0	160.0	130.0	130.0
30		80.0	160.0	130.0	130.0
36		80.0	160.0	130.0	130.0
39–1/4		80.0	160.0	130.0	130.0
42		80.0	160.0	130.0	130.0
48		80.0	130.0	130.0	130.0
50		80.0	130.0	130.0	130.0
54		80.0	130.0	130.0	130.0
56		80.0	130.0	130.0	130.0
60		–	–	130.0	130.0
24	96	80.0	160.0	130.0	130.0
30		80.0	160.0	130.0	130.0
36		80.0	160.0	130.0	130.0
39–1/4		80.0	160.0	130.0	130.0
42		80.0	130.0	130.0	130.0
48		80.0	130.0	130.0	130.0
50		80.0	130.0	130.0	130.0
54		80.0	130.0	130.0	130.0
56		–	–	130.0	130.0
60		–	–	130.0	130.0
24	102	80.0	130.0	130.0	130.0
30		80.0	130.0	130.0	130.0
36		80.0	130.0	130.0	130.0
39–1/4		80.0	130.0	130.0	130.0
42		80.0	130.0	130.0	130.0
48		80.0	130.0	130.0	130.0
50		80.0	130.0	130.0	130.0
54		–	–	130.0	130.0
56		–	–	130.0	130.0
60		–	–	128.3	128.3
24	108	80.0	130.0	130.0	130.0
30		80.0	130.0	130.0	130.0
36		80.0	130.0	130.0	130.0
39–1/4		80.0	130.0	130.0	130.0
42		80.0	130.0	130.0	130.0
48		80.0	130.0	130.0	130.0
50		–	–	130.0	130.0
54		–	–	130.0	130.0
56		–	–	127.9	127.9
60		–	–	122.5	122.5

DESIGN LOAD CAPACITY – PSF (GLASS)					
PANEL WIDTH NOMINAL INCHES	DOOR HEIGHT INCHES	W/O REINF'D INTERLOCKS		WITH REINF'D INTERLOCKS	
		EXT.(+)	INT.(–)	EXT.(+)	INT.(–)
24	114	–	–	130.0	130.0
30		–	–	130.0	130.0
36		–	–	130.0	130.0
39–1/4		–	–	130.0	130.0
42		–	–	130.0	130.0
48		–	–	130.0	130.0
50		–	–	130.0	130.0
54		–	–	127.9	127.9
56		–	–	122.7	122.7
24	120	–	–	130.0	130.0
30		–	–	130.0	130.0
36		–	–	130.0	130.0
39–1/4		–	–	130.0	130.0
42		–	–	130.0	130.0
48		–	–	130.0	130.0
50		–	–	130.0	130.0
54		–	–	121.3	121.3

DOOR SIZES TO COMPLY WITH FBC EGRESS REQUIREMENTS AS APPLICABLE.

NOTE:
GLASS CAPACITIES ON THIS SHEET ARE BASED ON ASTM E1300–04 (3 SEC. GUSTS) AND FLORIDA BUILDING COMMISSION DECLARATORY STATEMENT DCA05–DEC–219

$$\text{PANEL WIDTH NOMINAL} = \frac{\text{OVERALL DOOR WIDTH}}{\text{NUMBER OF PANELS}}$$

PANEL HEIGHT = DOOR HEIGHT – 2"

MAX. OVERALL DOOR WIDTH ANY CONFIGURATION = 216"

(INTERPOLATION BETWEEN WIDTHS ALLOWED)

SHOWN CAPACITIES ARE FOR
4.938" SILL HEIGHTS
LIMIT EXTERIOR(+) LOADS AS FOLLOWS
3.750" SILL HT. = +80.0 PSF
3.188" SILL HT. = +53.3 PSF

2.500" SILL HEIGHTS CAN BE USED FOR INSTALLATIONS WHERE WATER INFILTRATION RESISTANCE IS NOT REQUIRED OR WHERE OVERHANG RATIO COMPLIES WITH FBC REQUIREMENTS.

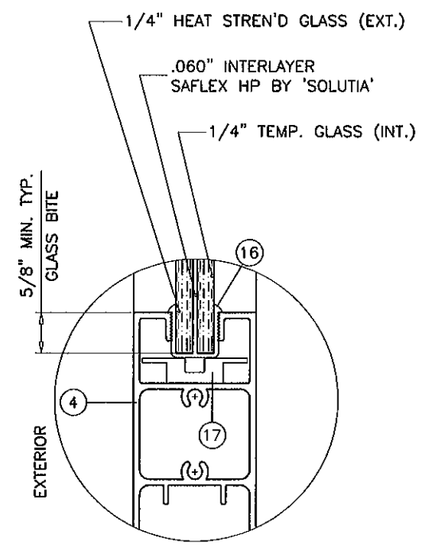

GLAZING DETAIL

PRODUCT REVISED
in complying with the Florida Building Code
Acceptance No 12-0113.15
Expiration Date 12/30/14
By [signature]
Typed Date, Product Control

Engr: JAVAD AHMAD
CIVIL
FLA. PE # 70592
C.A.N. 3538

MAY 17 2012

AL-FAROOQ CORPORATION
ENGINEERS & PRODUCT DEVELOPMENT
1235 S.W. 87 AVE
MIAMI, FLORIDA 33174
TEL. (305) 264-8100 FAX. (305) 262-6978
EGS\SMI\W04-80EGS

ATLANTIC SERIES SMI 130 ALUM. SLIDING GLASS DOOR

EGS INTERNATIONAL, LLC
3133 S.W. 25TH STREET
PEMBROKE PARK, FL. 33009
TEL. (954) 964-1441 FAX. (954) 964-1533

revisions:

no	date	by	description
C	03.25.09		UPDATED FOR 2007 FBC
D	10.05.09		REV. PER BCCO COMMENTS
E	11.14.11		NO CHANGE THIS SHEET
F	05.14.12		REV. PER PERA COMMENTS

date: 9–10–04
scale: 1/2"=1'–0"
dr. by: KAY
chk. by:

drawing no.
W04–80

DESIGN LOAD CAPACITY – PSF (ANCHORS)				
PANEL WIDTH NOMINAL INCHES	DOOR HEIGHT INCHES	ANCHORS TYPE 'A' EXT.(+)/INT.(–)	ANCHORS TYPE 'B' EXT.(+)/INT.(–)	ANCHORS TYPE 'C' EXT.(+)/INT.(–)
24	84	160.0	160.0	160.0
30		160.0	160.0	160.0
36		160.0	160.0	160.0
39–1/4		160.0	160.0	160.0
42		160.0	160.0	160.0
48		160.0	130.0	160.0
50		158.2	130.0	160.0
54		151.6	130.0	160.0
56		148.8	130.0	160.0
60		144.0	130.0	160.0
24	90	160.0	160.0	160.0
30		160.0	160.0	160.0
36		160.0	160.0	160.0
39–1/4		160.0	160.0	160.0
42		160.0	160.0	160.0
48		147.3	130.0	160.0
50		143.6	130.0	160.0
54		137.1	130.0	160.0
56		134.4	130.0	160.0
60		129.6	130.0	160.0
24	96	160.0	160.0	160.0
30		160.0	160.0	160.0
36		160.0	160.0	160.0
39–1/4		155.6	160.0	160.0
42		148.1	130.0	160.0
48		135.0	130.0	160.0
50		131.4	130.0	160.0
54		125.2	130.0	160.0
56		122.5	130.0	160.0
60		117.8	130.0	153.9
24	102	160.0	130.0	160.0
30		160.0	130.0	160.0
36		154.3	130.0	160.0
39–1/4		144.3	130.0	160.0
42		137.1	130.0	160.0
48		124.6	130.0	160.0
50		121.2	130.0	158.3
54		115.2	130.0	150.5
56		112.6	130.0	147.1
60		108.0	125.2	141.1
24	108	160.0	130.0	160.0
30		160.0	130.0	160.0
36		144.0	130.0	160.0
39–1/4		134.5	130.0	160.0
42		127.7	130.0	160.0
48		115.7	130.0	151.1
50		112.4	130.0	146.8
54		106.7	123.7	139.3
56		104.1	120.7	136.0
60		99.7	115.6	130.2

$$\text{PANEL WIDTH NOMINAL} = \frac{\text{OVERALL DOOR WIDTH}}{\text{NUMBER OF PANELS}}$$

PANEL HEIGHT = DOOR HEIGHT – 2"

DESIGN LOAD CAPACITY – PSF (ANCHORS)				
PANEL WIDTH NOMINAL INCHES	DOOR HEIGHT INCHES	ANCHORS TYPE 'A' EXT.(+)/INT.(–)	ANCHORS TYPE 'B' EXT.(+)/INT.(–)	ANCHORS TYPE 'C' EXT.(+)/INT.(–)
24	114	160.0	130.0	160.0
30		157.1	130.0	160.0
36		135.0	130.0	160.0
39–1/4		126.0	130.0	160.0
42		119.4	130.0	156.0
48		108.0	125.2	141.1
50		104.8	121.5	136.9
54		99.3	115.1	129.7
56		96.9	112.3	126.5
24	120	160.0	130.0	160.0
30		148.1	130.0	160.0
36		127.1	130.0	160.0
39–1/4		118.4	130.0	154.7
42		112.2	130.0	146.6
48		101.3	117.4	132.3
50		98.2	113.9	128.3
54		92.9	107.7	121.3

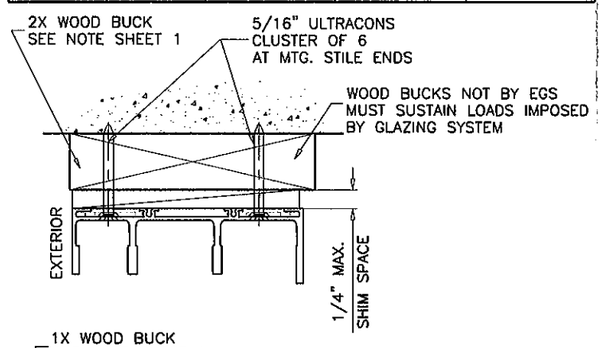

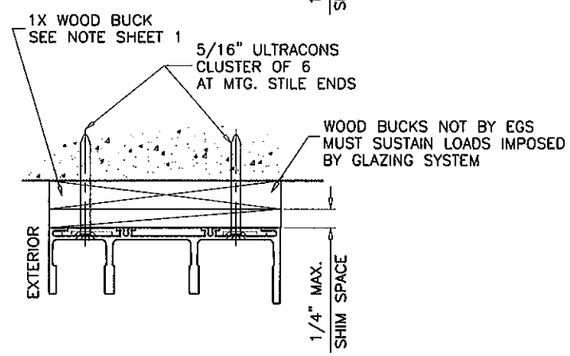

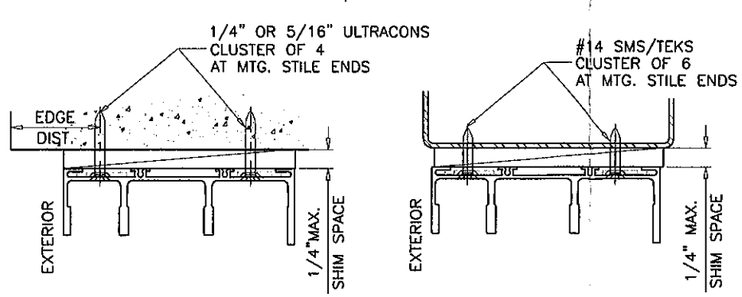

ANCHOR OPTIONS

TYPICAL ANCHORS: SEE ELEV. FOR SPACING

AT HEAD

TYPE 'A'

1/4" DIA. ULTRACON BY 'ELCO' (Fu=177 KSI, Fy=155 KSI)
DIRECTLY INTO CONCRETE, 1–3/4" MIN. CONCRETE EMBEDMENT

TYPE 'B'

5/16" DIA. ULTRACON BY 'ELCO' (Fu=177 KSI, Fy=155 KSI)
INTO WOOD STRUCTURES, 1–7/8" MIN. WOOD EMBEDMENT
THRU 1BY BUCKS INTO CONCRETE, 1–1/4" MIN. CONC. EMBEDMENT

TYPE 'C'

5/16" DIA. ULTRACON BY 'ELCO' (Fu=177 KSI, Fy=155 KSI)
DIRECTLY INTO CONCRETE, 1–3/4" MIN. CONC. EMBED

TYPE 'C'

#14 SMS OR SELF DRILLING SCREWS (GRADE 2 CRS)
INTO METAL STRUCTURES OR APPROVED CLIPPED MULLIONS
STEEL : 1/8" THK. MIN. (Fy = 36 KSI MIN.)
ALUMINUM : 1/8" THK. MIN. (6063–T5 MIN.)
(STEEL IN CONTACT WITH ALUMINUM TO BE PLATED OR PAINTED)

AT SILL

TYPE 'A'

1/4" DIA. ULTRACON BY 'ELCO' (Fu=177 KSI, Fy=155 KSI)
DIRECTLY INTO CONCRETE, 1–3/4" MIN. CONCRETE EMBEDMENT

TYPE 'C'

5/16" DIA. ULTRACON BY 'ELCO' (Fu=177 KSI, Fy=155 KSI)
DIRECTLY INTO CONCRETE, 1–3/4" MIN. CONC. EMBED

AT JAMBS

1/4" DIA. ULTRACON BY 'ELCO' (Fu=177 KSI, Fy=155 KSI)
INTO 2BY BUCKS OR WOOD STRUCTURES, 1–1/2" MIN. WOOD EMBEDMENT
THRU 1BY BUCKS INTO CONC. OR MASONRY, 1–1/4" MIN. CONC. OR MASONRY EMBED.
DIRECTLY INTO CONC. OR MASONRY, 1–1/4" MIN. CONC. OR MASONRY EMBED

#14 SMS OR SELF DRILLING SCREWS (GRADE 2 CRS)
INTO METAL STRUCTURES OR APPROVED CLIPPED MULLIONS
STEEL : 1/8" THK. MIN. (Fy = 36 KSI MIN.)
ALUMINUM : 1/8" THK. MIN. (6063–T5 MIN.)
(STEEL IN CONTACT WITH ALUMINUM TO BE PLATED OR PAINTED)

ANCHOR EDGE DISTANCES

INTO CONCRETE = 2–1/2" MIN. (1/4" DIA. ANCHORS)
3–1/8" MIN. (5/16" DIA. ANCHORS)
INTO WOOD STRUCTURE = 1" MIN. (1/4" DIA. ANCHORS)
1–1/4" MIN. (5/16" DIA. ANCHORS)
INTO METAL STRUCTURE = 3/4" MIN.

CONCRETE AT HEAD, SILL OR JAMBS f'c = 3000 PSI MIN.
C–90 HOLLOW/FILLED BLOCK AT JAMBS f'm = 2000 PSI MIN.

PRODUCT REVISED
in complying with the Florida Building Code
Acceptance No. 12-0131.15
Expiration Date 12/30/14
[illegible]

Engr: JAVAD AHMAD
CIVIL
FLA. PE # 70592
C.A.N. 3538

MAY 17 2012

AL-FAROOQ CORPORATION
ENGINEERS & PRODUCT DEVELOPMENT
1235 S.W. 87 AVE
MIAMI, FLORIDA 33174
TEL. (305) 264-8100 FAX. (305) 262-6978
EGS\SMI\W04-80EGS

ATLANTIC SERIES SMI 130 ALUM. SLIDING GLASS DOOR

EGS INTERNATIONAL, LLC
3133 S.W. 25TH STREET
PEMBROKE PARK, FL. 33009
TEL. (954) 964-1441 FAX. (954) 964-1533

revisions:

no	date	by	description
C	03.25.09		UPDATED FOR 2007 FBC
D	10.05.09		NO CHANGE THIS SHEET
E	11.14.11		UPDATED TO 2010 FBC
F	05.14.12		REV. PER PERA COMMENTS

date: 9–10–04
scale: 1/2"=1'–0"
dr. by: KAY
chk. by:

drawing no.
W04–80

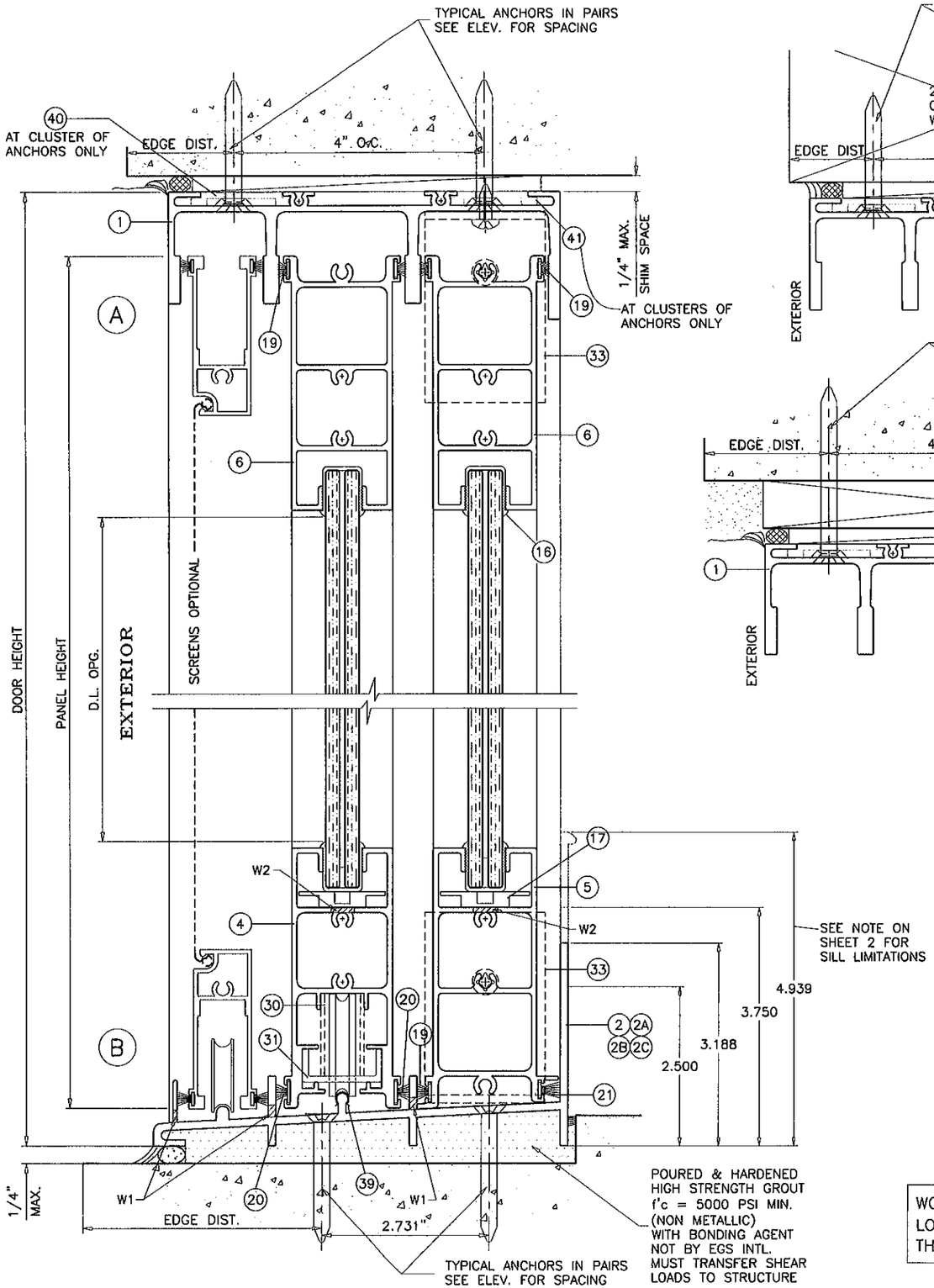

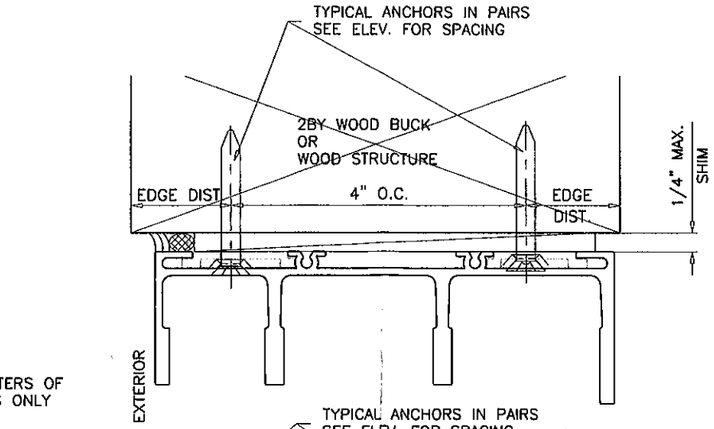

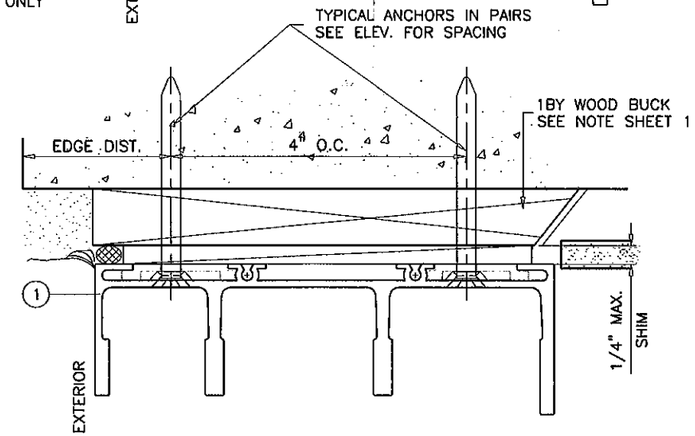

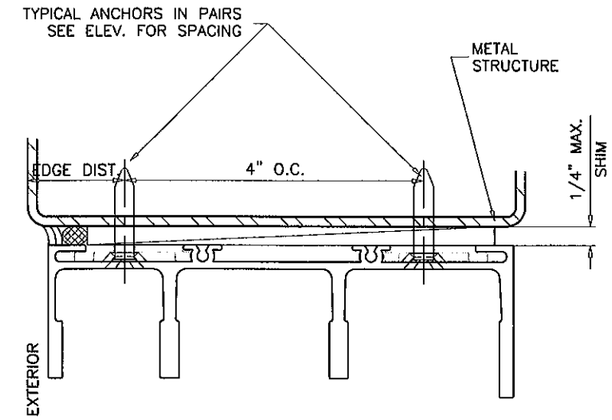

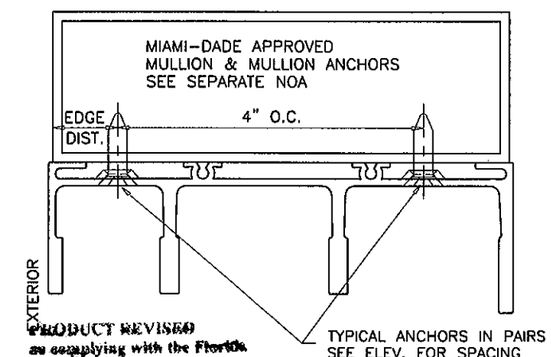

PRODUCT REVISED
as complying with the Florida
Building Code
Acceptance No. 12-0313.15
Expiration Date 12/30/14

SEALANT:

ALL JOINTS AND FRAME CONNECTIONS SEALED WITH WHITE/ALUMINUM COLORED SILICONE.
MAJOR INTERLOCK STILES TOP AND BOTTOM ENDS FILLED WITH EXPANDING URETHANE FOAM.

ALL INSTALLATION ANCHOR HEADS TO BE SEALED & EXPOSED ANCHORS TO BE CAPPED WITH ALUM. BUTTON COVERS.

WEEPHOLES:

W1 = 3/16"H X 3/4"W WEEP SLOTS AT QUARTER POINTS OF EACH PANEL
W2 = 3/8" WEEP HOLE AT 6" FROM ENDS AND CENTER OF EACH RAIL

WOOD BUCKS NOT BY EGS INTL., MUST SUSTAIN LOADS IMPOSED BY GLAZING SYSTEM AND TRANSFER THEM TO THE BUILDING STRUCTURE.

Engr: JAVAD AHMAD
CIVIL
FLA. PE # 70592
C.A.N. 3538

MAY 1 8 2012

AL-FAROOQ CORPORATION
ENGINEERS & PRODUCT DEVELOPMENT
1235 S.W. 87 AVE
MIAMI, FLORIDA 33174
TEL (305) 264-8100 FAX. (305) 262-6978
EGS\SMI\W04-80EGS

ATLANTIC SERIES SMI 130 ALUM. SLIDING GLASS DOOR

EGS INTERNATIONAL, LLC
3133 S.W. 25TH STREET
PEMBROKE PARK, FL. 33009
TEL. (954) 964-1441 FAX. (954) 964-1533

revisions:

no	date	by	description
C	03.25.09		UPDATED FOR 2007 FBC
D	10.05.09		NO CHANGE THIS SHEET
E	11.14.11		NO CHANGE THIS SHEET
F	05.14.12		REV. PER PERA COMMENTS

date:
scale: 1/2" = 1"
dr. by:
chk. by:

drawing no.
W04-80

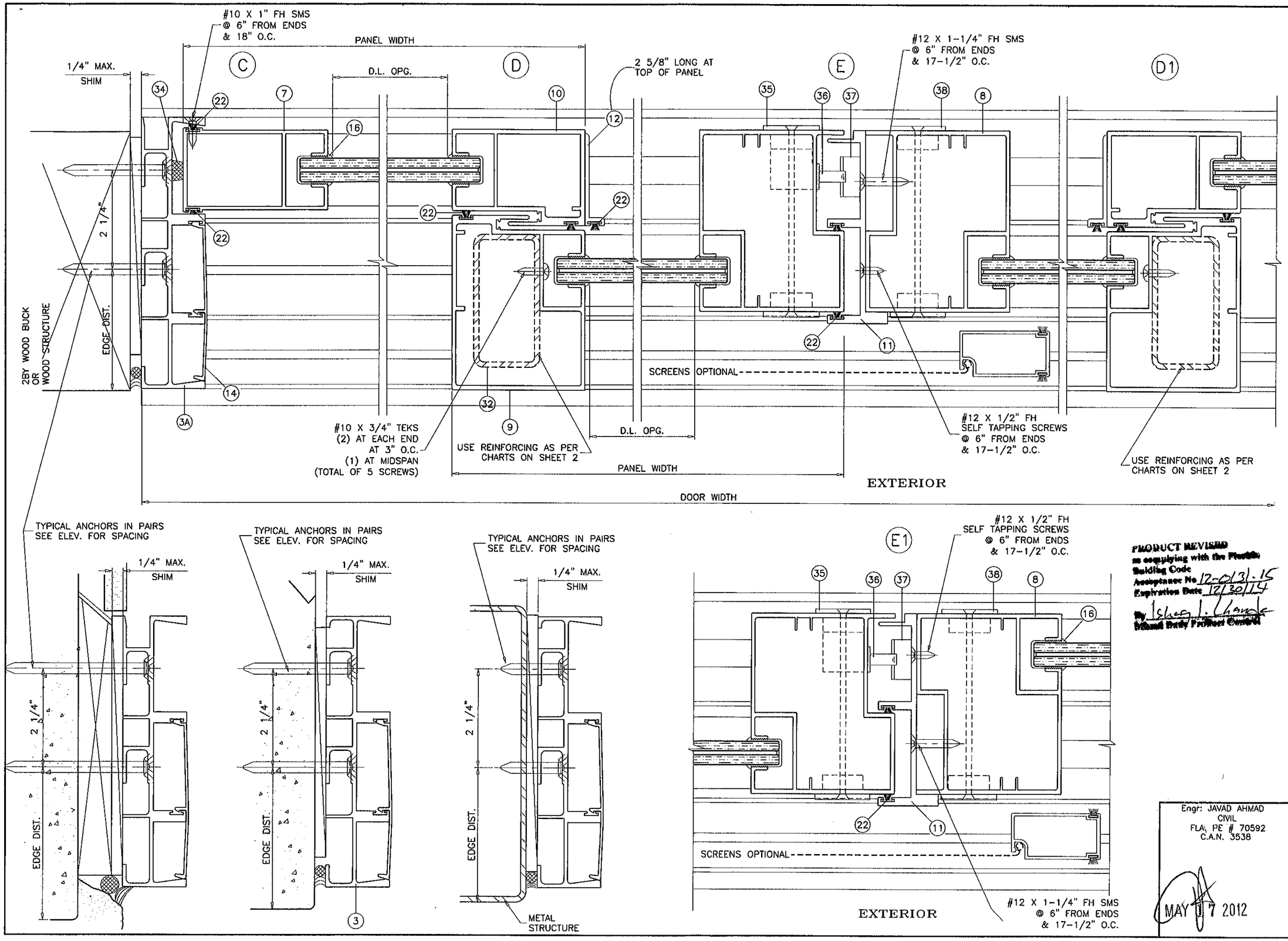

PRODUCT REVISED
in complying with the Florida
Building Code
Acceptance No. 12-0131.15
Expiration Date 12/30/14
By Ishwar L. Chandra
Miami Dade Product Control

Engr: JAVAD AHMAD
CIVIL
FLA. PE # 70592
C.A.N. 3538

MAY 17 2012

AL-FAROOQ CORPORATION
ENGINEERS & PRODUCT DEVELOPMENT
1235 S.W. 87 AVE
MIAMI, FLORIDA 33174
TEL. (305) 264-8100 FAX. (305) 262-6978
EGS\SMI\W04-80EGS

ATLANTIC SERIES SMI 130 ALUM. SLIDING GLASS DOOR

EGS INTERNATIONAL, LLC
3133 S.W. 25TH STREET
PEMBROKE PARK, FL. 33009
TEL. (954) 964-1441 FAX. (954) 964-1533

revisions:

no	date	by	description
C	03.25.09		UPDATED FOR 2007 FBC
D	10.05.09		NO CHANGE THIS SHEET
E	11.14.11		UPDATED TO 2010 FBC
F	05.14.12		REV. PER PERA COMMENTS

date: 9-10-04
scale: 1/2" = 1"
dr. by: KAY
chk. by:

drawing no.
W04-80

sheet 5 of 8

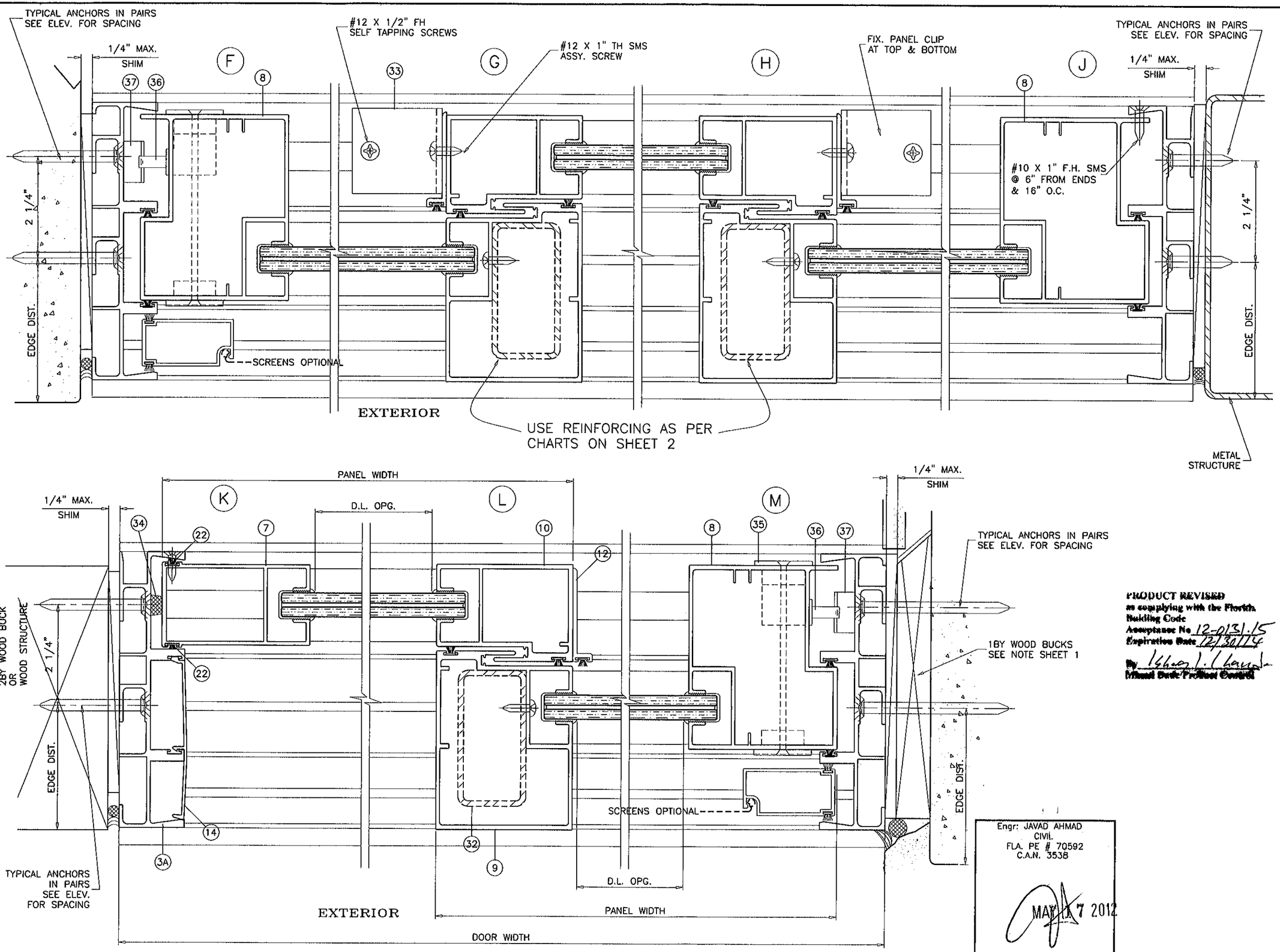

PRODUCT REVISED
as complying with the Florida Building Code
Acceptance No. 12-0131.15
Expiration Date 12/30/14
By Ishwar L. Lawala
Miami Dade Product Control

Engr: JAVAD AHMAD
CIVIL
FLA. PE # 70592
C.A.N. 3538

MAY 17 2012

AL-FAROOQ CORPORATION
ENGINEERS & PRODUCT DEVELOPMENT
1235 S.W. 87 AVE
MIAMI, FLORIDA 33174
TEL. (305) 264-8100 FAX. (305) 262-6978

EGS\SMI\W04-80EGS

ATLANTIC SERIES SMI 130 ALUM. SLIDING GLASS DOOR

EGS INTERNATIONAL, LLC
3133 S.W. 25TH STREET
PEMBROKE PARK, FL. 33009
TEL. (954) 964-1441 FAX. (954) 964-1533

revisions:

no	date	by	description
C	03.25.09		UPDATED FOR 2007 FBC
D	10.05.09		NO CHANGE THIS SHEET
E	11.14.11		UPDATED TO 2010 FBC
F	05.14.12		REV. PER PERA COMMENTS

date: 9-10-04
scale: 1/2" = 1"
dr. by: KAY
chk. by:

drawing no.
W04-80

sheet 6 of 8

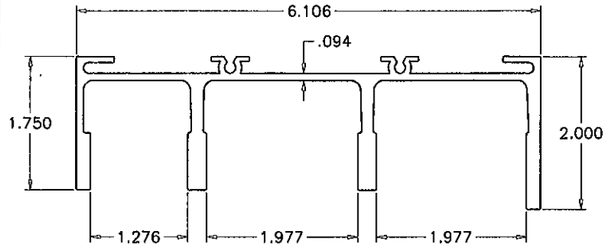

1 FRAME HEAD

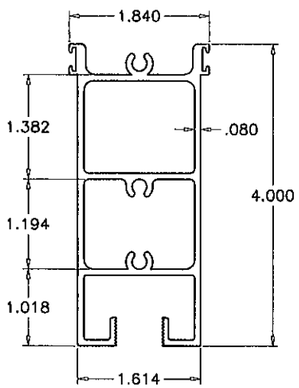

6 TOP RAIL

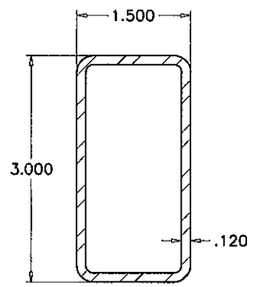

32 REINFORCING TUBE

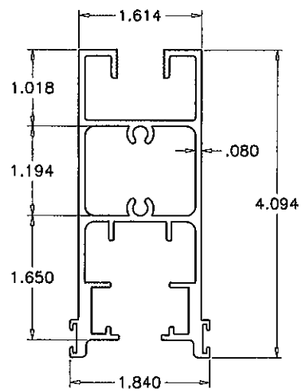

4 MOVING BOTTOM RAIL

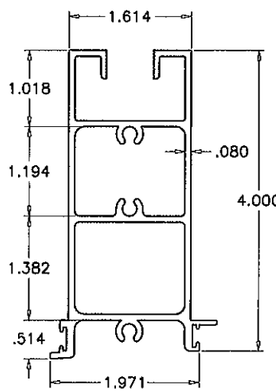

5 FIXED BOTTOM RAIL

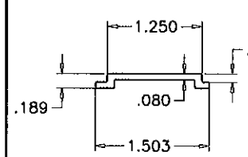

40 SHEAR CLIP

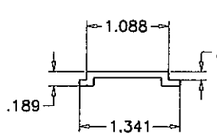

41 SHEAR CLIP

S.M.I. = SMALL MISSILE IMPACT GLASS SHAPES

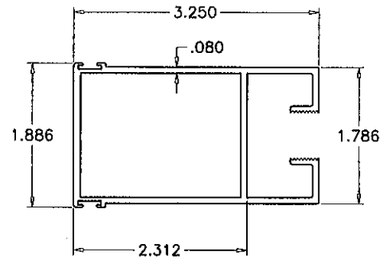

7 FIXED STILE

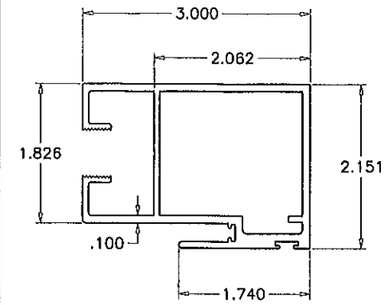

10 MINOR INTERLOCK

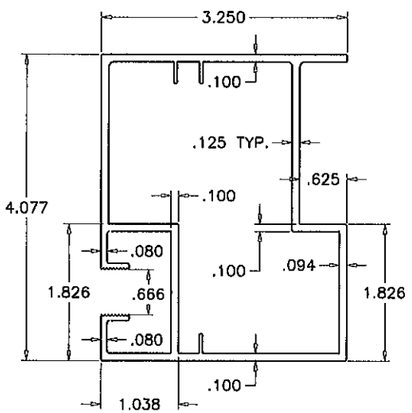

8 LOCKING STILE

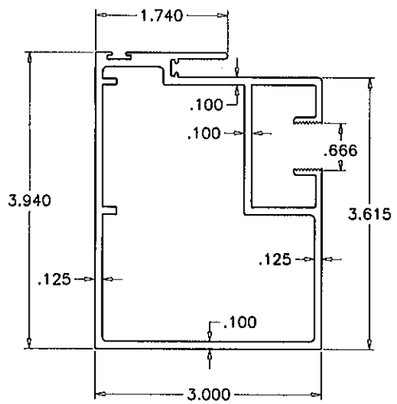

9 MAJOR INTERLOCK

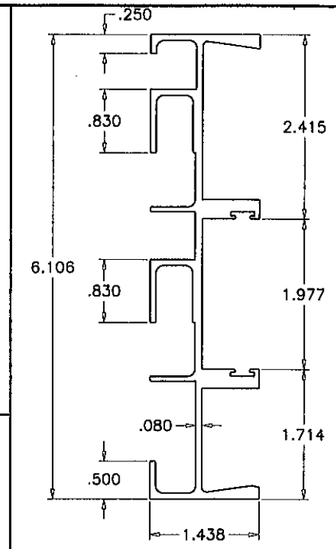

3 FRAME JAMB W/O POCKET

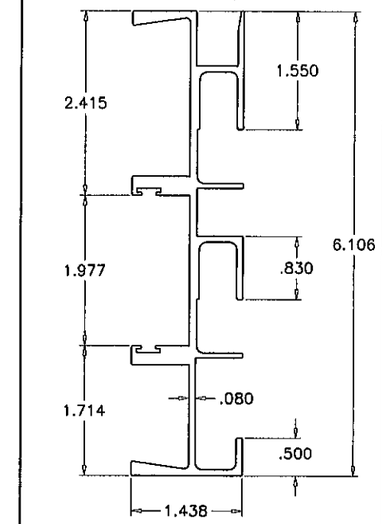

3A FRAME JAMB WITH POCKET

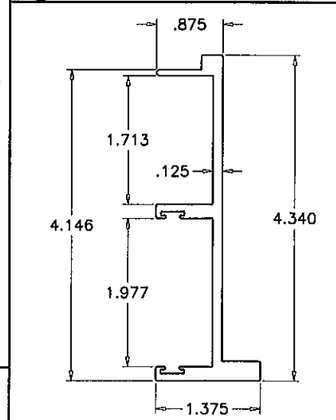

11 STILE ADAPTER

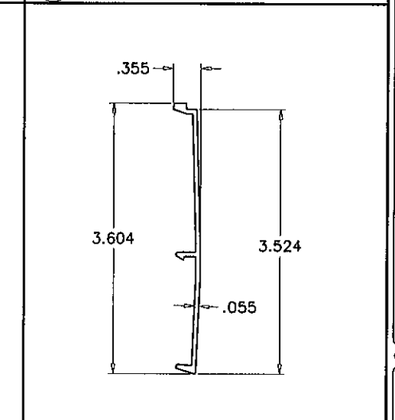

14 JAMB COVER

(SEE WATER RATING SHEET 2)

PRODUCT REVIEWED as complying with the Florida Building Code
Acceptance No. 12-0131.15
Expiration Date 12/30/14
By Ichwq L. Chowdhury
Miami-Dade Product Control

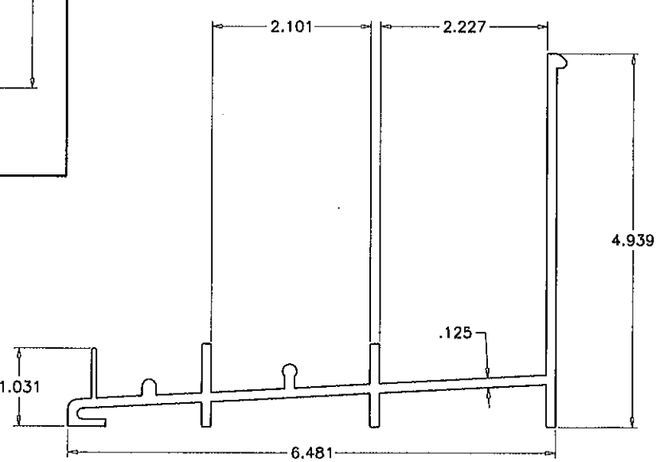

2B FRAME SILL

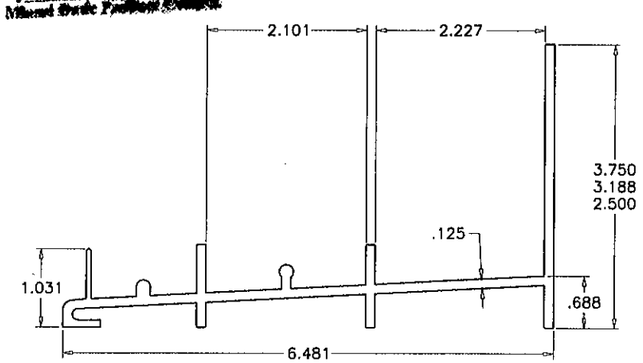

2 2A 2C FRAME SILL

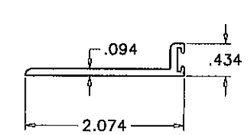

12 DOOR SWEEP

Engr: JAVAD AHMAD
CIVIL
FLA. PE # 70592
C.A.N. 3538

MAY 17 2012

AL-FAROOQ CORPORATION
ENGINEERS & PRODUCT DEVELOPMENT
1235 S.W. 87 AVE
MIAMI, FLORIDA 33174
TEL. (305) 264-8100 FAX. (305) 262-6978
EGS\SMI\W04-80EGS

ATLANTIC SERIES SMI 130 ALUM. SLIDING GLASS DOOR

EGS INTERNATIONAL, LLC
3133 S.W. 25TH STREET
PEMBROKE PARK, FL. 33009
TEL. (954) 964-1441 FAX. (954) 964-1533

revisions:

no	date	by	description
C	03.25.09		UPDATED FOR 2007 FBC
D	10.05.09		NO CHANGE THIS SHEET
E	11.14.11		NO CHANGE THIS SHEET
F	05.14.12		REV. PER PERA COMMENTS

date: 9-10-04
scale: 1/2" = 1"
dr. by: KAY
chk. by:

drawing no. W04-80

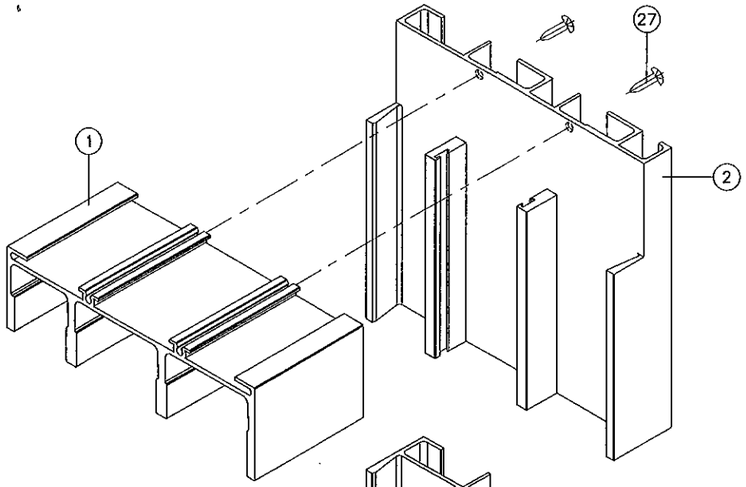

FRAME TOP CORNER

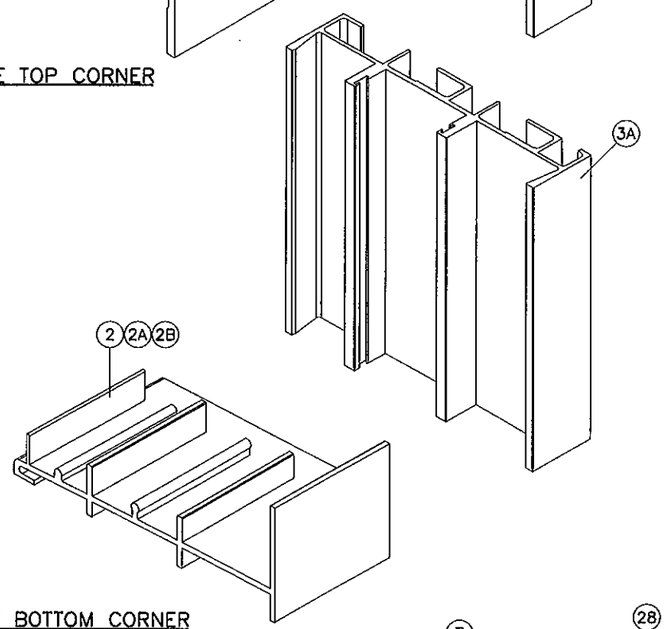

FRAME BOTTOM CORNER

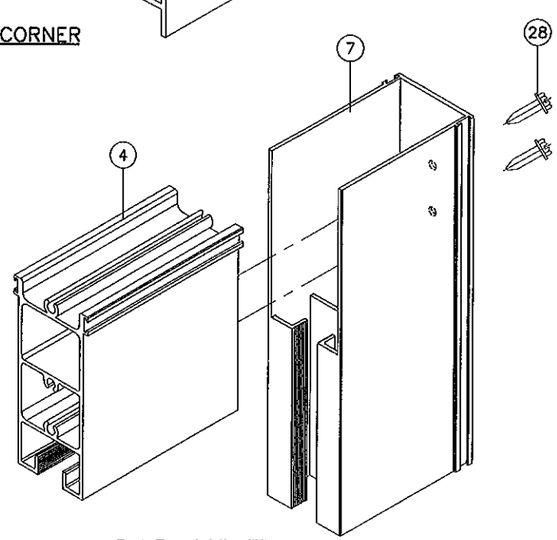

PANEL CORNER

ITEM NO.	PART NUMBER	QUANTITY	DESCRIPTION	MATERIAL	MANF./SUPPLIER/REMARKS
1	EGS-551	1	FRAME HEAD	6005-T5/6105-T5	–
2	EGS-580	1	FRAME SILL (3-3/16" HIGH)	6005-T5/6105-T5	–
2A	EGS-581	1	FRAME SILL (3-3/4" HIGH)	6005-T5/6105-T5	–
2B	EGS-552	1	FRAME SILL (4-15/16" HIGH)	6005-T5/6105-T5	–
2C	EGS-580	1	FRAME SILL (2-1/2" HIGH)	6005-T5/6105-T5	–
3	EGS-567	2	FRAME JAMB W/O POCKET	6005-T5/6105-T5	–
3A	EGS-553	2	ALT. FRAME JAMB W/ POCKET	6005-T5/6105-T5	–
4	EGS-573	1/MOV. PANEL	MOVING BOTT. RAIL (S.M.I.)	6005-T5/6105-T5	–
5	EGS-572	1/FIX. PANEL	FIXED BOTT. RAIL (S.M.I.)	6005-T5/6105-T5	–
6	EGS-571	1/PANEL	TOP RAIL (S.M.I.)	6005-T5/6105-T5	–
7	EGS-574	AS REQD.	FIXED STILE (S.M.I.)	6005-T5/6105-T5	–
8	EGS-575	AS REQD.	LOCKING STILE (S.M.I.)	6005-T5/6105-T5	–
9	EGS-576	AS REQD.	MAJOR INTERLOCK (S.M.I.)	6005-T5/6105-T5	–
10	EGS-577	AS REQD.	MINOR INTERLOCK (S.M.I.)	6005-T5/6105-T5	–
11	EGS-561	AS REQD.	STILE ADAPTER	6005-T5/6105-T5	–
12	EGS-566	AS REQD.	DOOR SWEEP	6063-T5/6105-T5	AT TOP OF FIXED PANEL
14	EGS-570	AS REQD.	JAMB COVER	6063-T5/6105-T5	OPTIONAL
16	EGS-72	AS REQD.	9/16" GLAZING GASKET	SOFT PVC	TEAMPLASTICS (BVC INC.)
17	TX11429E	2/ LITE	SETTING BLOCKS, 4" LONG, @ 10" FROM EACH END	EPDM	TREMCO
19	28027045/7527-6011-4	AS REQD.	FINSEAL WOOLPILE AT HORIZ. RAILS	–	AMESBURY
20	T-2836G	AS REQD.	POLYBOND FINSEAL AT MOV. BOTTOM RAIL	–	ULTRAFAB (.280H X .360 BASE)
21	38027045/7537-6011-6	AS REQD.	FINSEAL WOOLPILE AT FIX. BOTTOM RAIL	–	AMESBURY
22	21027045/7420-6011-2	AS REQD.	FINSEAL WOOLPILE AT VERT. STILES & SWEEP	–	AMESBURY
27	#8 X 3/4"	2/ CORNER	FRAME ASSEMBLY SCREWS	ST. STEEL	PH SMS
28	#12 X 1"	2/ CORNER	PANEL ASSEMBLY SCREWS	ST. STEEL	TH SMS
30	–	2/ PANEL	PANEL ROLLER ASSEMBLY	ST. STEEL	1-11/16" O.D. WHEELS
31	–	1/ MOV. PANEL	ALUM CHANNEL, FULL WIDTH OF PANEL	6063-T5	–
32	–	AS REQD.	INTERLOCK REINFORCEMENT	STEEL	1 1/2" X 3" X 11 G.A.
33	–	AS REQD.	FIX. PANEL CLIP (AT FRAME HEAD/SILL)	ALUMINUM	2 X 3 X 1/8" X 1-7/8" LONG
34	–	AS REQD.	RUBBER BUMPER	–	1/2" X 1/2" SQ. X 3/16" HIGH
35	4430-00-08 OR W5208-NPV30	1	TRIMSET PULL	ABS RESIN OR BRASS (PVD)	ADAMS-RITE OR ASHLAND
36	MS1847-09	1	DEAD LOCK, MOUNTED W/ (2) #6 X 1/4" FH SCREWS	ST. STEEL	ADAMS-RITE
37	4801-05	1	STRIKE, MOUNTED W/ (2) #8 X 1" PH SCREWS & PLASTIC SHIM	ST. STEEL	ADAMS-RITE
38	4432 OR W5208-PP30	1	DUMMY TRIMSET PULL	ABS RESIN OR BRASS (PVD)	ADAMS-RITE OR ASHLAND
39	TC2	1	TRACK COVER	ST/ST	HYGRADE
40	EGS-584	AS REQD.	SHEAR CLIP AT CLUSTERS ONLY	6005-T5/6105-T5	–
41	EGS-584	AS REQD.	SHEAR CLIP AT CLUSTERS ONLY	6005-T5/6105-T5	–

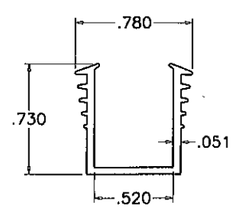

HARDNESS = 85 SHORE A
TENSILE STRENGTH (BREAK)= 1810 PSI
ELONGATION AT BREAK = 320%
TEAR STRENGTH = 260 LBF/IN
SPECIFIC GRAVITY = 1.45

GLAZING GASKET
SCALE 1:1

(16)

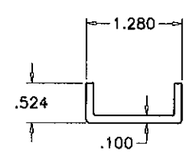

(31) MOV. PANEL REINF.

PRODUCT REVIEWED
as complying with the Florida Building Code
Acceptance No. 12-0131.15
Expiration Date 12/30/14
By Shaq L. Chanda
Miami Dade Product Control

Engr: JAVAD AHMAD
CIVIL
FLA. PE # 70592
C.A.N. 3538

MAY 17 2012

AL-FAROOQ CORPORATION
ENGINEERS & PRODUCT DEVELOPMENT
1235 S.W. 87 AVE
MIAMI, FLORIDA 33174
TEL. (305) 264-8100 FAX. (305) 262-6978

EGS\SMI\W04-80EGS

ATLANTIC SERIES SMI 130 ALUM. SLIDING GLASS DOOR

EGS INTERNATIONAL, LLC
3133 S.W. 25TH STREET
PEMBROKE PARK, FL. 33009
TEL. (954) 964-1441 FAX. (954) 964-1533

revisions:

no	date	by	description
C	03.25.09		UPDATED FOR 2007 FBC
D	10.05.09		NO CHANGE THIS SHEET
E	11.14.11		UPDATED TO 2010 FBC
F	05.14.12		REV. PER PERA COMMENTS

date: 9-10-04
scale: 1/2" = 1"
dr. by: KAY
chk. by:

drawing no.
W04-80

sheet 8 of 8