MIAMI-DADE COUNTY
DEPARTMENT OF PERMITTING, ENVIRONMENT, AND REGULATORY AFFAIRS (PERA)
BOARD AND CODE ADMINISTRATION DIVISION

MIAMI-DADE COUNTY
PRODUCT CONTROL SECTION
11805 SW 26 Street, Room 208
Miami, Florida 33175-2474
T (786) 315-2590 F (786) 315-2599
www.miamidade.gov/pera/

# NOTICE OF ACCEPTANCE (NOA)

**Ruskin Company**
**3900 Dr. Greaves Road**
**Grandview, MO 64030**

**SCOPE:** This NOA is being issued under the applicable rules and regulations governing the use of construction materials. The documentation submitted has been reviewed and accepted by Miami-Dade County PERA -Product Control Section to be used in Miami Dade County and other areas where allowed by the Authority Having Jurisdiction (AHJ).

This NOA shall not be valid after the expiration date stated below. The Miami-Dade County Product Control Section (In Miami Dade County) and/or the AHJ (in areas other than Miami Dade County) reserve the right to have this product or material tested for quality assurance purposes. If this product or material fails to perform in the accepted manner, the manufacturer will incur the expense of such testing and the AHJ may immediately revoke, modify, or suspend the use of such product or material within their jurisdiction. PERA reserves the right to revoke this acceptance, if it is determined by Miami-Dade County Product Control Section that this product or material fails to meet the requirements of the applicable building code. This product is approved as described herein, and has been designed to comply with the Florida Building Code, including the High Velocity Hurricane Zone.

**DESCRIPTION: Model PHB637HDXD Aluminum Penthouse Louver**

**APPROVAL DOCUMENT:** Drawing No. **60-021966**, titled "PHB637HDXD PENTHOUSE", sheets 1 through 13 of 13, prepared by Ruskin Company, dated 01/09/2006, with last revision F dated 09/18/2007, signed and sealed by William J. Mossie, P.E., bearing the Miami-Dade County Product Control renewal stamp with the Notice of Acceptance number and expiration date by the Miami-Dade County Product Control Section.

**MISSILE IMPACT RATING: Large and Small Missile Impact Resistant**

**LABELING:** Each unit shall bear a permanent label with the manufacturer's name or logo, city, state, model/series, and following statement: "Miami-Dade County Product Control Approved", unless otherwise noted herein.

**RENEWAL** of this NOA shall be considered after a renewal application has been filed and there has been no change in the applicable building code negatively affecting the performance of this product.

**TERMINATION** of this NOA will occur after the expiration date or if there has been a revision or change in the materials, use, and/or manufacture of the product or process. Misuse of this NOA as an endorsement of any product, for sales, advertising or any other purposes shall automatically terminate this NOA. Failure to comply with any section of this NOA shall be cause for termination and removal of NOA.

**ADVERTISEMENT:** The NOA number preceded by the words Miami-Dade County, Florida, and followed by the expiration date may be displayed in advertising literature. If any portion of the NOA is displayed, then it shall be done in its entirety.

**INSPECTION:** A copy of this entire NOA shall be provided to the user by the manufacturer or its distributors and shall be available for inspection at the job site at the request of the Building Official.

This NOA **renews NOA # 06-1101.08** and consists of this page 1 and evidence page E-1, as well as approval document mentioned above.

The submitted documentation was reviewed by **Carlos M. Utrera, P.E.**

MIAMI-DADE COUNTY APPROVED

04/12/2012

**NOA No. 12-0203.15**
**Expiration Date: April 26, 2017**
**Approval Date: April 19, 2012**

## NOTICE OF ACCEPTANCE: EVIDENCE SUBMITTED

**A. DRAWINGS**

1. Manufacturer's die drawings and sections.
2. Drawing No. **60-021966**, titled "PHB637HDXD PENTHOUSE", sheets 1 through 13 of 13, prepared by Ruskin Company, dated 01/09/2006, with last revision F dated 09/18/2007, signed and sealed by William J. Mossie, P.E.

**B. TESTS *"Submitted under NOA # 06-1101.08"***

1. Test report on TAS 201-Large Missile Impact Test, TAS 203-Cyclic Wind Pressure Test and TAS 202-Uniform Static Air Pressure Test titled "Ruskin Company STRUCTURAL PERFORMANCE TEST", prepared by National Certified Testing Laboratories, Test Report **# 210-3247.2,** dated 06/16/2006, signed and sealed on 08/03/2006 by Gerard J. Ferrara, P.E.

**C. CALCULATIONS**

1. Structural and anchoring calculations for PHB6375DXD Hinged Roof Penthouse, 23 pages, complying with the 2007 FBC, prepared by Daniel J. Rau P.E., signed and sealed on 01/24/2012 by William J. Mossie, P.E.

**D. QUALITY ASSURANCE**

1. Miami-Dade Department of Permitting, Environment, and Regulatory Affairs (PERA)

**E. MATERIAL CERTIFICATIONS**

1. None.

**F. STATEMENTS**

1. Statement letter of code conformance to 2010 FBC issued by Ruskin Company, dated 04/11/2012, signed and sealed by William J. Mossie, P.E.
2. Statement letter of no financial interest issued by Ruskin Company, dated 01/24/2012, signed and sealed by William J. Mossie, P.E.

04/12/2012

**Carlos M. Utrera, P.E.**
**Product Control Examiner**
**NOA No. 12-0203.15**
**Expiration Date: April 26, 2017**
**Approval Date: April 19, 2012**

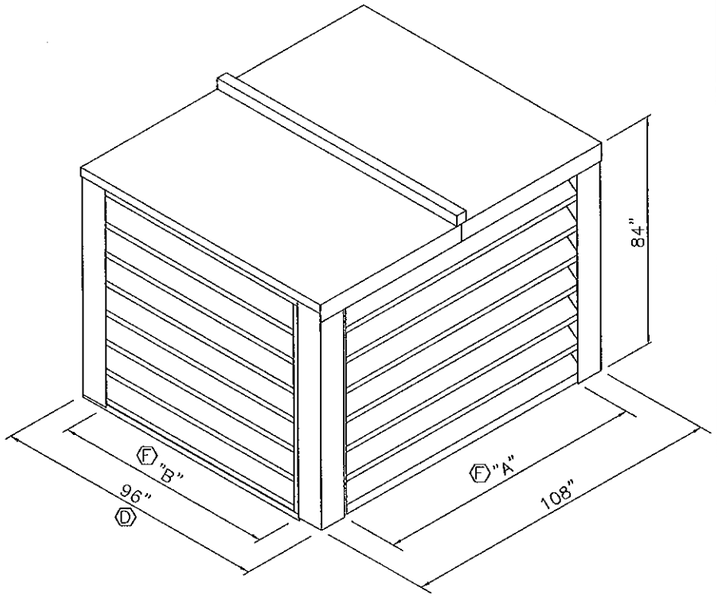


PENTHOUSE ISOMETRIC

| FRAME |
|---|
| 6063–T5 extruded aluminum with .125" nominal wall thickness. |
| **BLADES** |
| 6063–T5 extruded aluminum with .081" nominal wall thickness. Blades are positioned at 37.5° angle. |
| **SCREEN** |
| 5/8" x .040" expanded flattened aluminum bird screen. WELDED TO FRAME |
| **ROOF** |
| .080 thick formed aluminum panels |
| **SILL** |
| .125" thick formed aluminum |
| **FINISH** |
| Mill: See note 8 |

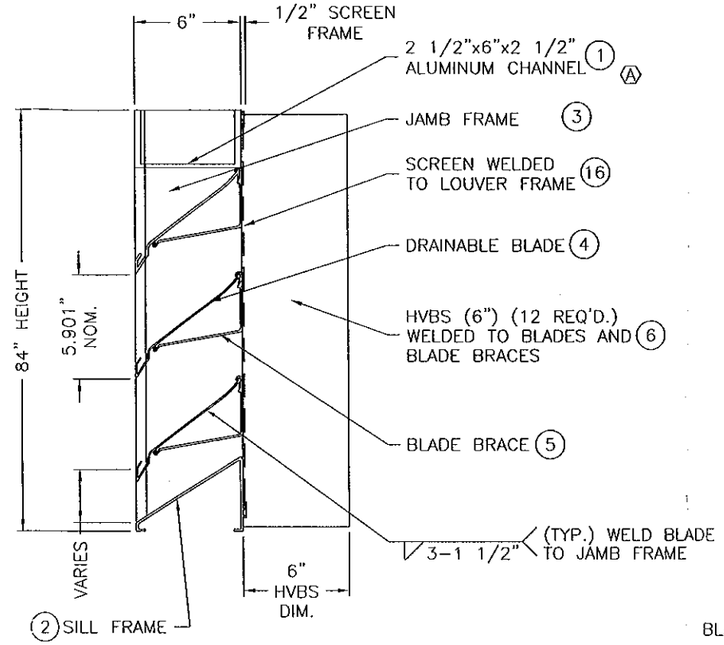


PHB6375DXD LOUVER SECTION

DESIGN PRESSURE RATING
±110 PSF

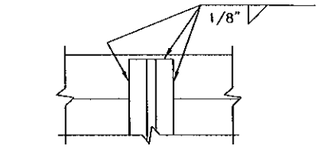


HVBS WELD DETAIL HEAD

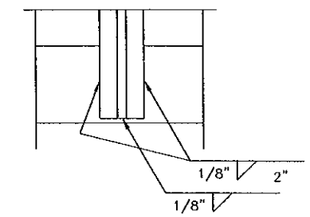


HVBS WELD DETAIL SILL

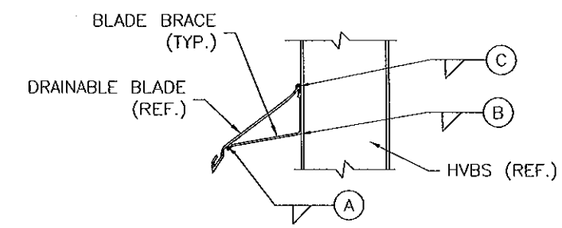


BLADE BRACE WELD DETAIL

Ⓐ WELD FRONT HOOK OF BLADE BRACE TO BLADE HOOK. WELD ONE SIDE AT CORNERS, BOTH SIDES AT INTERMEDIATE HVBS

Ⓑ WELD BLADE BRACE TO CORNER ANGLE AND HVBS, FULL HEIGHT OF BLADE BRACE.

Ⓒ WELD BLADE BRACE TO TOP OF BLADE. WELD ONE SIDE AT CORNERS, BOTH SIDES AT INTERMEDIATE HVBS.

FOR OFFICE USE ONLY

**PRODUCT RENEWED**
**as complying with the Florida Building Code**
**Acceptance No** 12-0203.15
**Expiration Date** 04/26/2017
**By** _____
**Miami Dade Product Control**

William J. Mossie
Registered
PE #71909
State of
Florida
Professional Engineer
01/24/2012

NOTE:
DESCRIPTION LINE ITEMS ON DWG. 05B

## NOTES:

1) DIMENSIONS SHOWN ARE ACTUAL SIZE.

2) PENTHOUSE DESIGN INCORPORATES STRUCTURAL SUPPORTS, ATTACHED TO REAR OF LOUVERS TO WITHSTAND A WINDLOAD OF ±110 PSF. REFERENCE PLAN VIEW FOR SIZE, QTY., & LOCATION.

3) HVBS = HIDDEN VERTICAL BLADE SUPPORT
OPP. = OPPOSITE
SIM. = SIMILAR
TYP. = TYPICAL

4) SEALING REQUIREMENTS AROUND PENTHOUSE SHALL COMPLY WITH PROVISIONS OF CHAPTER 15 OF FLORIDA BUILDING CODE.

5) BITUMINOUS COMPOUNDS REQUIRED BETWEEN DISSIMILAR METALS OR PENTHOUSE AND OTHER SURFACES IS THE RESPONSIBILITY OF THE INSTALLATION CONTRACTOR TO SUPPLY AND PROPERLY

6) DETAIL BALLOON DESCRIPTION:

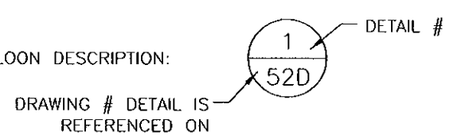


7) DIMENSIONS 'A'+12" AND 'B'+12" ARE THE OUTSIDE DIMENSIONS OF THE PENTHOUSE SIDES. DIMENSIONS 'A' AND 'B' ARE THE INSIDE OF THE CURB.

8) MILL FINISH IS STANDARD. PAINTED AND ANODIZE FINISHES ARE ALSO AVAILABLE.

9) MAXIMUM PHB6375DXD PENTHOUSE OUTSIDE DIMENSIONS ARE 84"x96"x84" TALL AS INDICATED ON THESE DRAWINGS. PENTHOUSE UNITS MAY BE CONSTRUCTED IN SMALLER SIZES. MINIMUM OUTSIDE DIMENSIONS ARE 24"x24"x12" TALL.

10) RUSKIN DOES NOT PROVIDE OR INSTALL ROOF CURBS.

11) RUSKIN DOES NOT INSTALL PHB6375DXD PENTHOUSE. PROPER PENTHOUSE INSTALLATION PER THE APPROVED INSTALLATION DETAILS IS THE RESPONSIBILITY OF THE INSTALLATION CONTRACTOR.

12) REF DWGS: –02D THRU –04D FOR DETAILS, –05B FOR PARTS LIST, AND –06D THRU –25B FOR PARTS

13) THIS SYSTEM IS TO BE INSTALLED IN A LOCATION WHERE THE ROOM INSIDE THE SYSTEM IS DESIGNED TO DRAIN WATER PENETRATING INTO THE ROOM, AND THE ROOM WILL HOUSE WATER RESISTANT/WATER PROOF EQUIPMENT, COMPONENTS OR SUPPLIES.

| ENGINEER OF RECORD | | | |
|---|---|---|---|
| William J. Mossie, PE | | | |
| ENGINEERING DISCIPLINE | | | |
| Civil Engineer | | | |
| REGISTRATION NUMBER | | | |
| State of Florida #71909 | | | |
| DWN. BY: WRT | CHK. BY: DJR | APPV'D. BY: DJR | APPV'D. BY: |
| DATE: 7/11/05 | DATE: 1/9/06 | DATE: 1/9/06 | DATE: |

| CHANGE LETTER | REVISION DESCRIPTION | DWN. BY: | CHK'D. BY: | APPV'D. BY: | APPV'D. BY: | DATE |
|---|---|---|---|---|---|---|
| Ⓕ | REVISED NOTE 7 REVISED O.D. LOCATIONS | RAT | | | | 09/18/07 |
| Ⓔ | MODEL NAME CHANGE | DAR | VMA | VMA | | 5-18-06 |
| Ⓓ | EXTENDED SILL (NOT VISIBLE) | RFM | DJR | VMA | | 5-3-06 |
| Ⓒ | REMOVED SILL FROM ISOMETRIC | WRT | | | | 2/21/06 |
| Ⓑ | ADDED OFFICE USE BOX | WRT | DJR | DJR | | 2/8/06 |
| Ⓐ | CHANGED HEAD CHANNEL | DJR | DJR | | | 2-3-2006 |

*RUSKIN Mfg* *Grandview, MO*

PLOT SCALE: NONE

DWG. CERTIFIED BY: _____ DATE: _____

TITLE: PHB637HDXD (E) PENTHOUSE SPECS, NOTES AND DETAILS

DWG. NO. 60-021966-00D

Sheet One of 13

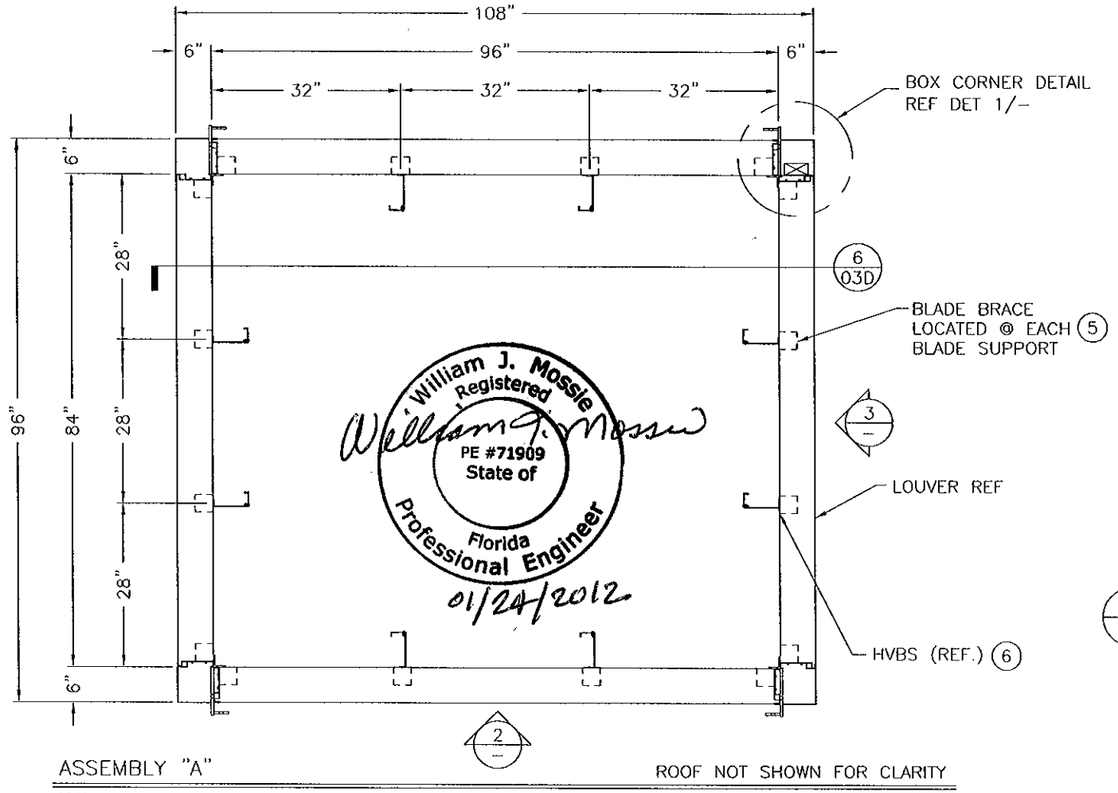


ASSEMBLY "A"

N.T.S.

ROOF NOT SHOWN FOR CLARITY

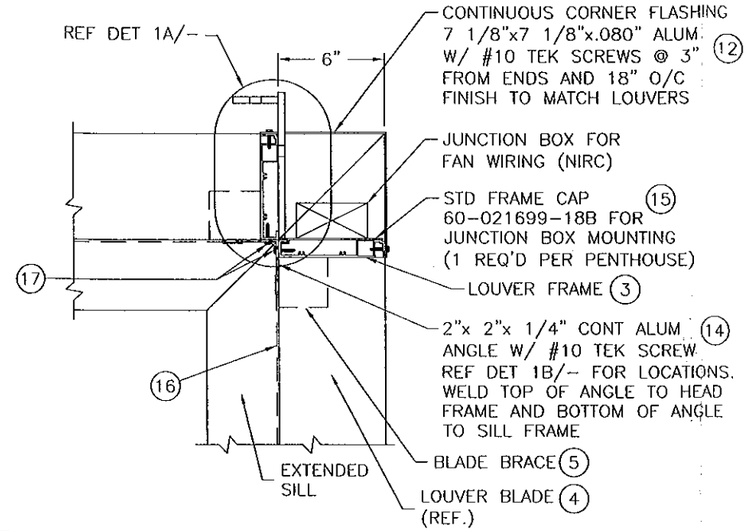


1 / – BOX CORNER DETAIL

NTS

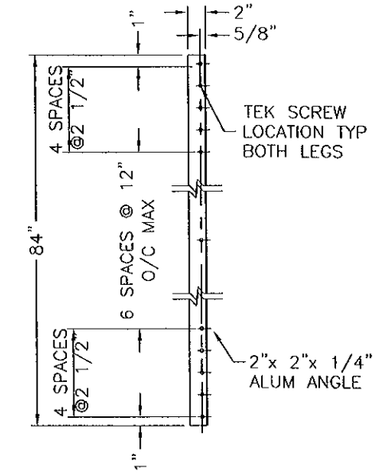


1B / – ITEM 14 – LOUVER CORNER ANGLE

NTS Ⓑ

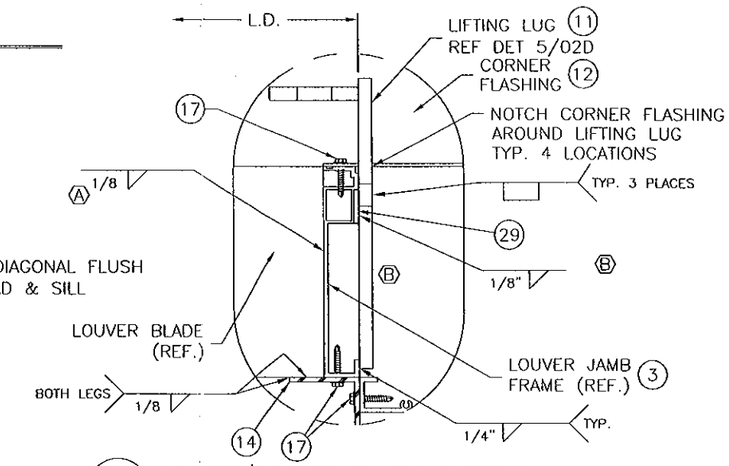


1A / – LOUVER/CORNER FLASHING DETAIL

NTS

ASSEMBLY "A"

N.T.S.

HEIGHT ('C') = 84

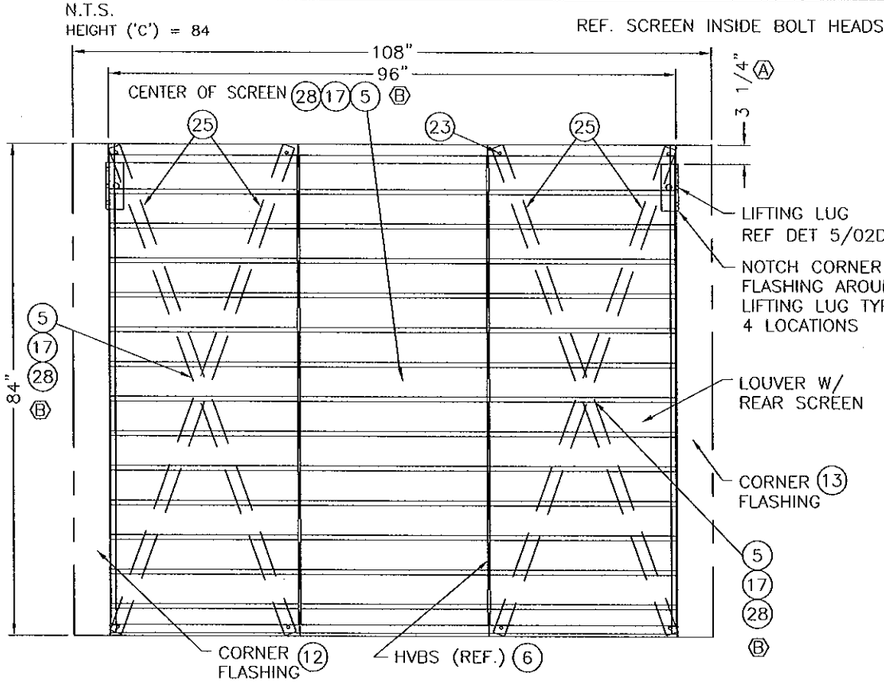


2 / – ELEVATION

N.T.S.

NOTE:
DESCRIPTION LINE ITEMS ON DWG. 05B

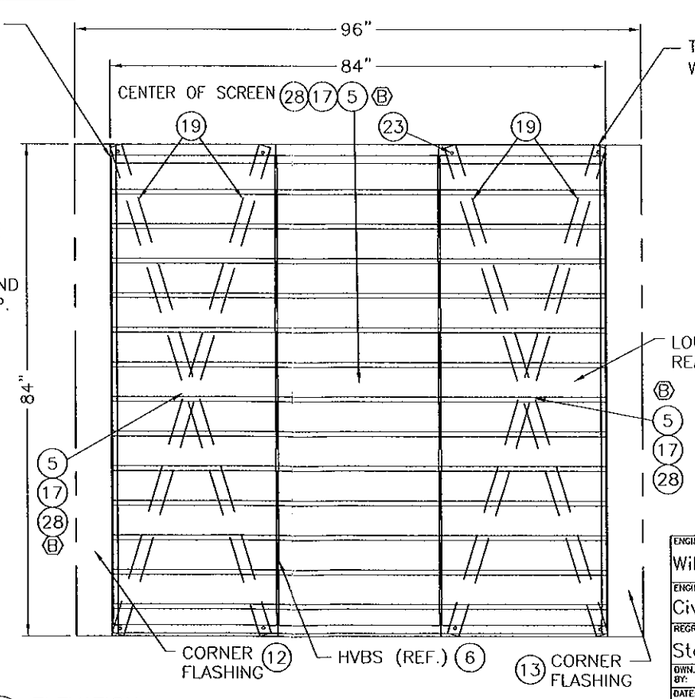


3 / – ELEVATION

N.T.S.

FOR OFFICE USE ONLY

PRODUCT RENEWED
as complying with the Florida
Building Code
Acceptance No 12-0203.15
Expiration Date 04/26/2017
By
Miami Dade Product Control

| CHANGE LETTER | REVISION DESCRIPTION | DWN. BY: | CHK'D. BY: | APPV'D. BY: | APPV'D. BY: | DATE |
|---|---|---|---|---|---|---|
| Ⓒ | MODEL NAME CHANGE | DAR | VMA | VMA | | 5-18-6 |
| Ⓑ | ADD SCREEN ANGLES, FILLER PLATE IN LOUVER/CORNER | RFM | DJR | VMA | | 5-3-06 |
| Ⓐ | CHANGED HEAD DIMENSION, ADDED WELD, ADDED FL APPROVAL BOX | DJR | DJR | VMA | | 2-3-2006 |

ENGINEER OF RECORD: William J. Mossie, PE

ENGINEERING DISCIPLINE: Civil Engineer

REGISTRATION NUMBER: State of Florida #71909

| DWN. BY: | CHK. BY: | APPV'D. BY: | APPV'D. BY: |
|---|---|---|---|
| WRT | DJR | DJR | |
| DATE: 7/11/05 | DATE: 1/9/06 | DATE: 1/9/06 | DATE: |

RUSKIN Mfg Grandview, MO

PLOT SCALE: NONE

DWG. CERTIFIED BY: DATE:

TITLE: PHB637HDXD Ⓒ PENTHOUSE DETAILS

DWG. NO. 60-021966-01D

Sheet 2 of 13

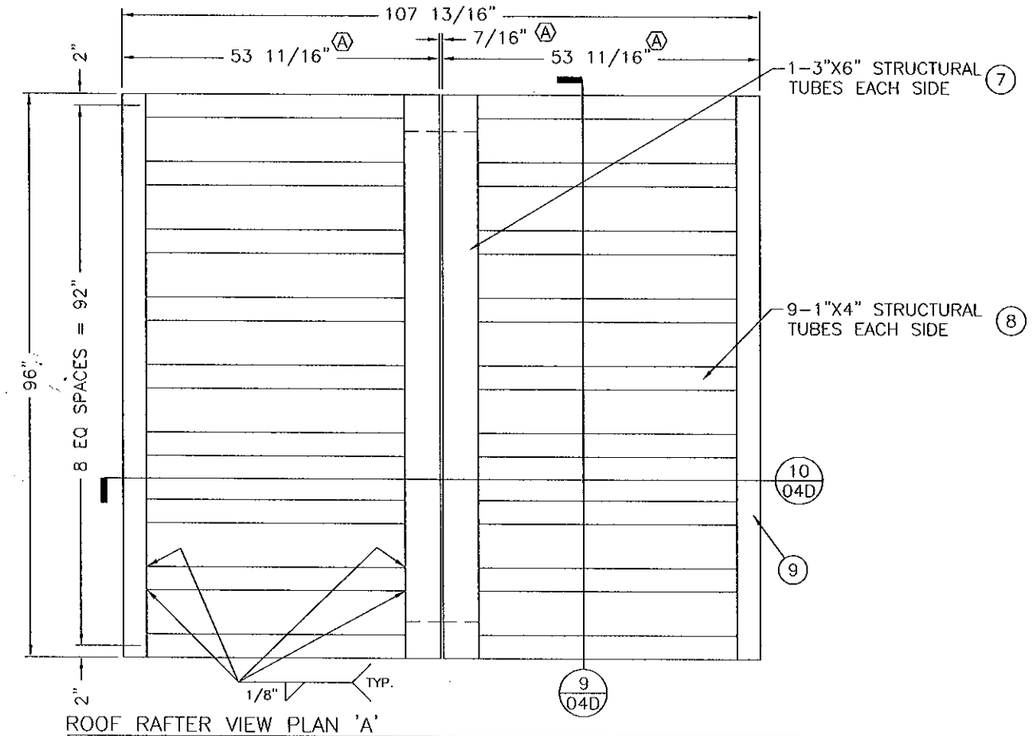


ROOF RAFTER VIEW PLAN 'A'
NTS

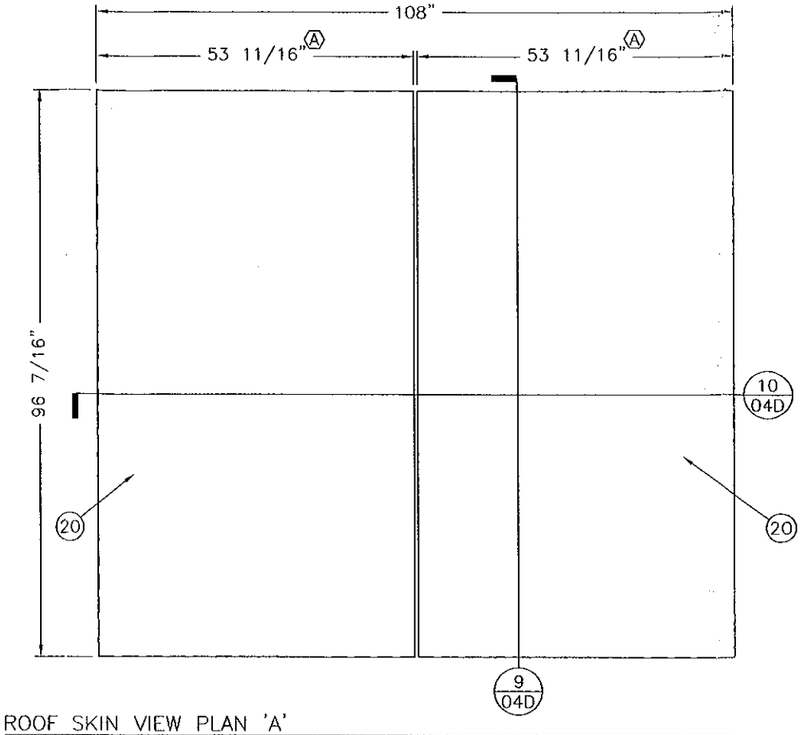


ROOF SKIN VIEW PLAN 'A'
NTS

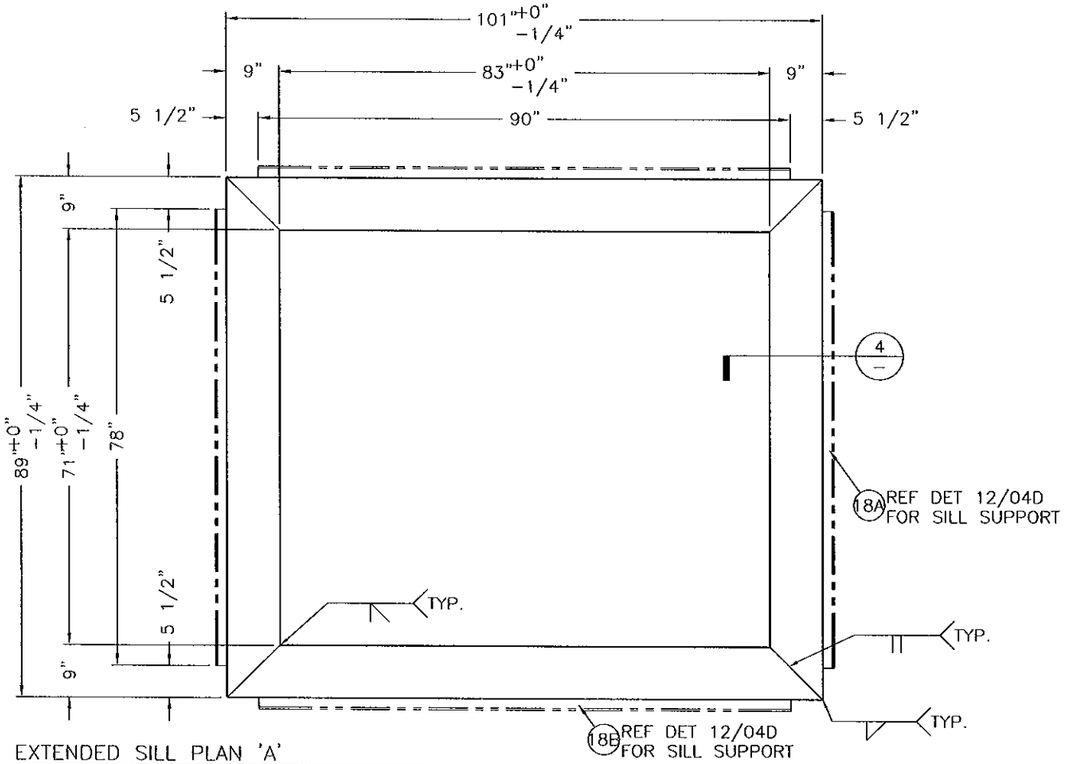


EXTENDED SILL PLAN 'A'
NTS

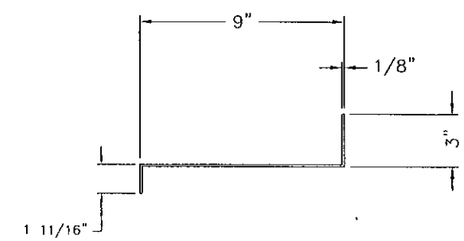


4 / – EXTENDED SILL DETAIL
NTS
MAT'L: .125" THICK FORMED ALUMINUM
FINISH TO MATCH LOUVER (SHIP LOOSE)

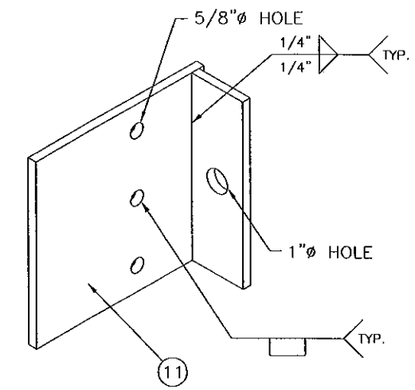


REF DWG 60-021966-09B FOR SPECIAL LIFTING LUG INFO Ⓑ

5 / – SPECIAL LIFTING LUG
NTS
MAT'L: .375" THICK ALUMINUM
FINISH TO MATCH LOUVER

FOR OFFICE USE ONLY

PRODUCT RENEWED
as complying with the Florida Building Code
Acceptance No 12-0203.15
Expiration Date 04/26/2017
By
Miami Dade Product Control

William J. Mossie Registered PE #71909 State of Florida Professional Engineer
01/24/2012

NOTE:
DESCRIPTION LINE ITEMS ON DWG. 05B

| | | | | | | |
|---|---|---|---|---|---|---|
| Ⓔ | MODEL NAME CHANGE | DAR | VMA | VMA | | 5-18-6 |
| Ⓑ | SPECIAL LIFTING LUG CHANGE # TO 60-021966-09B | RFM | DJR | VMA | | 5-3-06 |
| Ⓐ | MODIFIED EXTENDED SILL CHANGED ROOF RAFTER/SKIN | DJR | DJR | VMA | | 2-3-2006 |
| CHANGE LETTER | REVISION DESCRIPTION | DWN. BY: | CHK'D. BY: | APPV'D. BY: | APPV'D. BY: | DATE |

| | | | | |
|---|---|---|---|---|
| ENGINEER OF RECORD: William J. Mossie, PE | DWN. BY: WRT DATE: 7/11/05 | CHK. BY: DJR DATE: 1/9/06 | APPV'D. BY: DJR DATE: 1/9/06 | APPV'D. BY: DATE: |
| ENGINEERING DISCIPLINE: Civil Engineer | | | | |
| REGISTRATION NUMBER: State of Florida #71909 | | | | |

RUSKIN Mfg Grandview, MO

PLOT SCALE: NONE

DWG. CERTIFIED BY: DATE:

TITLE: PHB637HDXD (E) PENTHOUSE DETAILS

DWG. NO. 60-021966-02D
Sheet 3 of 13

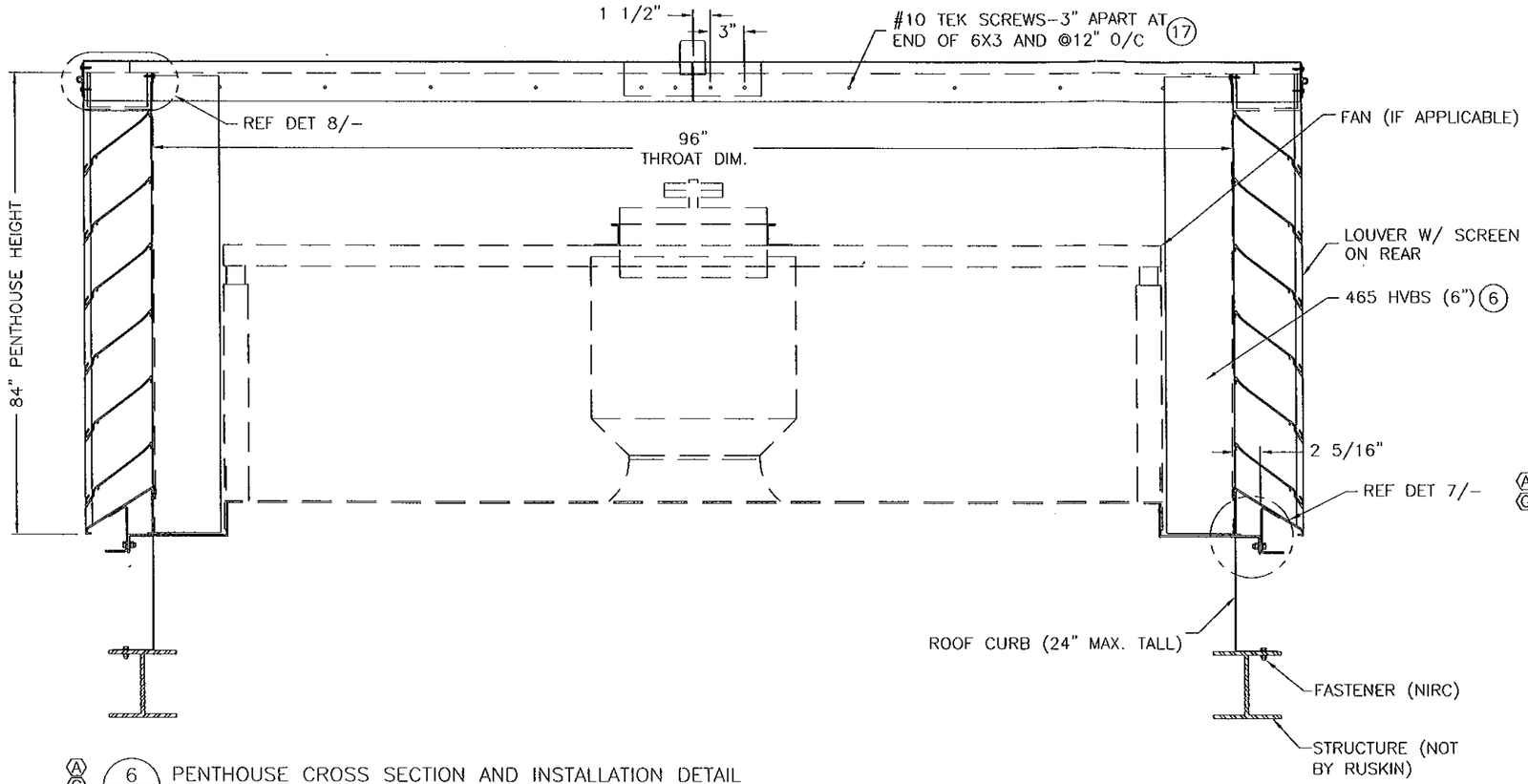


Ⓐ Ⓒ 6 / 01B PENTHOUSE CROSS SECTION AND INSTALLATION DETAIL
NTS

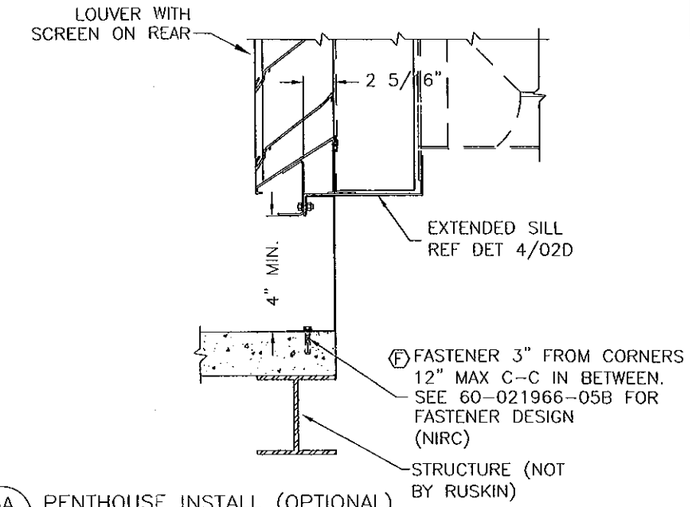


Ⓐ Ⓒ 6A / 01B PENTHOUSE INSTALL (OPTIONAL)
NTS
(FOR DETAILS NOT NOTED REF DET 6/-)

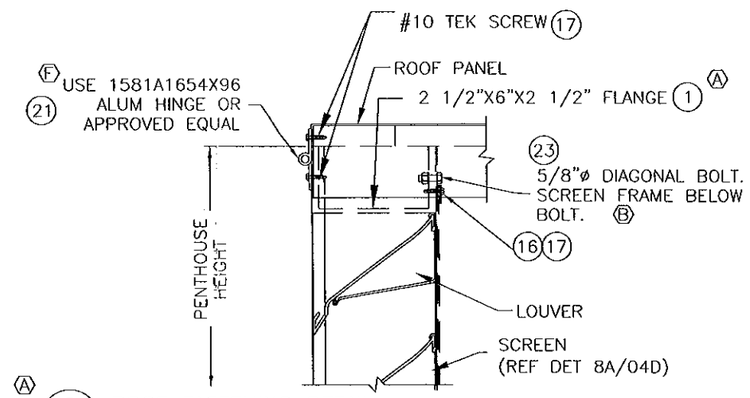


Ⓐ 8 / — ROOF FASTENING DETAIL
NTS

William J. Mossie Registered PE #71909 State of Florida Professional Engineer
01/24/2012

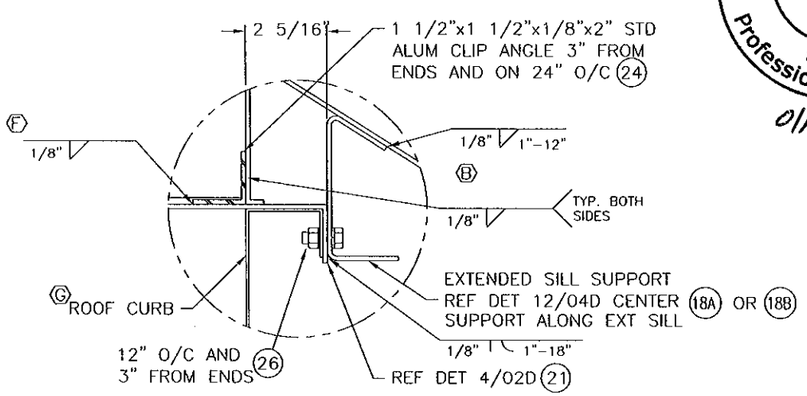


Ⓐ 7 / — PENTHOUSE/CURB CONNECTION DETAIL
NTS

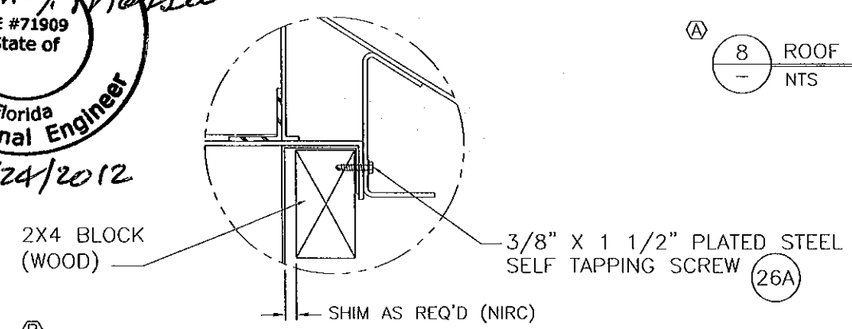


Ⓑ Ⓖ 7A / — PENTHOUSE/INSULATED CURB CONNECTION DETAIL
NTS

NOTE:
DESCRIPTION LINE ITEMS ON DWG. 05B

FOR OFFICE USE ONLY

**PRODUCT RENEWED**
as complying with the Florida Building Code
Acceptance No 12-0203.15
Expiration Date 04/26/2017
By
Miami Dade Product Control

| CHANGE LETTER | REVISION DESCRIPTION | DWN. BY: | CHK'D. BY: | APPV'D. BY: | APPV'D. BY: | DATE |
|---|---|---|---|---|---|---|
| Ⓖ | REVISED CURB LOCATION ADDED DIM TO VIEW 7A | RAT | | | | 09/18/07 |
| Ⓕ | CORRECTED HINGE #, CORRECTED CLIP CONNECTION DETAIL | DJR | VMA | VMA | | 8-28-06 |
| Ⓔ | MODEL NAME CHANGE | DAR | VMA | VMA | | 5-18-6 |
| Ⓐ | MODIFIED HEAD AND EXTENDED SILL ADDED FL APPROVAL BOX | DJR | DJR | VMA | | 2-3-2006 |

| | | | | |
|---|---|---|---|---|
| ENGINEER OF RECORD: William J. Mossie, PE | DWN. BY: WRT DATE: 7/11/05 | CHK. BY: DJR DATE: 1/9/06 | APPV'D. BY: DJR DATE: 1/9/06 | APPV'D. BY: DATE: |
| ENGINEERING DISCIPLINE: Civil Engineer | | | | |
| REGISTRATION NUMBER: State of Florida #71909 | | | | |

RUSKIN Mfg Grandview, MO

PLOT SCALE: NONE
DWG. CERTIFIED BY: DATE:

TITLE: PHB637HDXD (E) PENTHOUSE DETAILS

DWG. NO. 60-021966-03D
Sheet 4 of 13

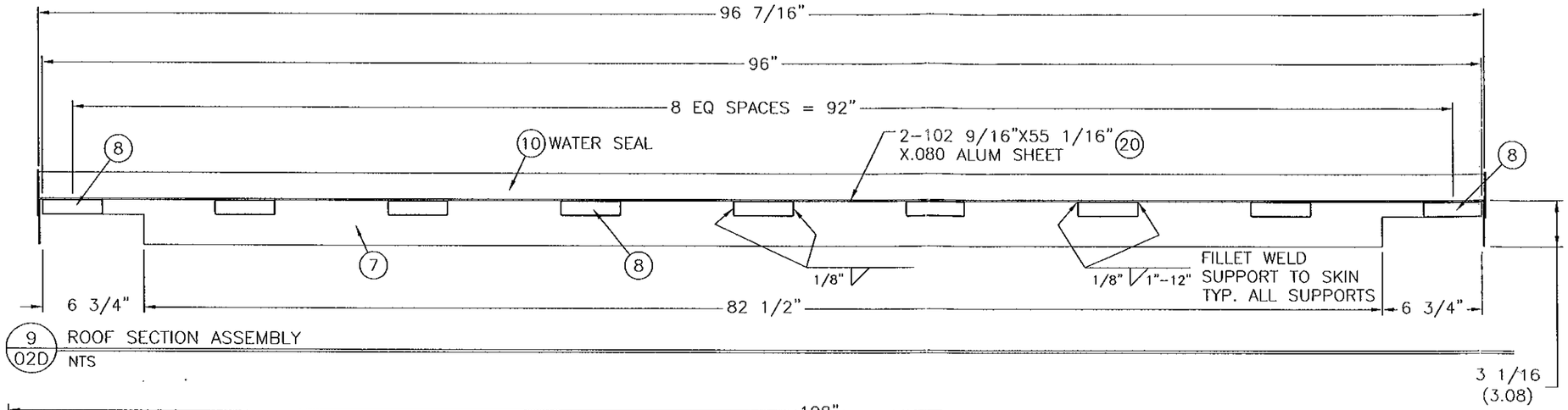


9 / 02D ROOF SECTION ASSEMBLY
NTS

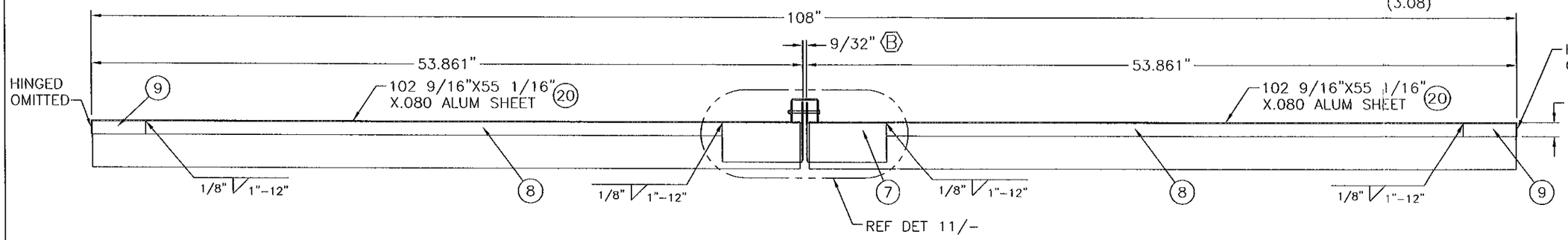


10 / 02D ROOF SECTION ASSEMBLY
NTS

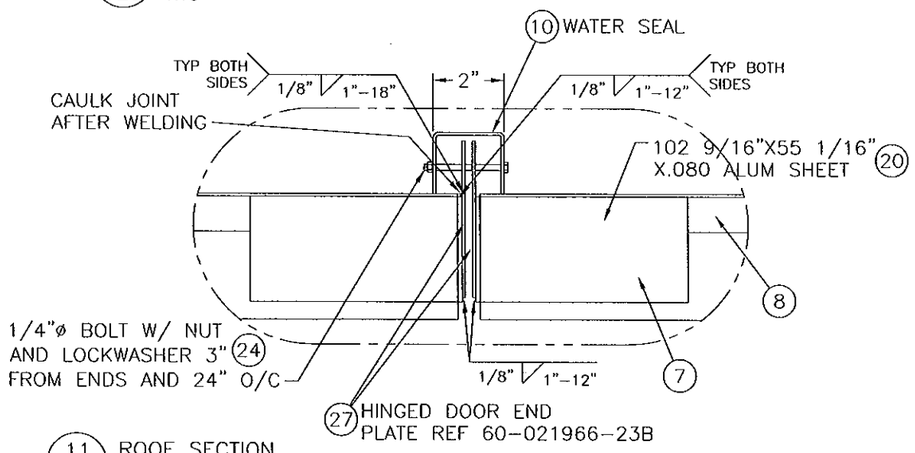


11 / 02D ROOF SECTION
NTS

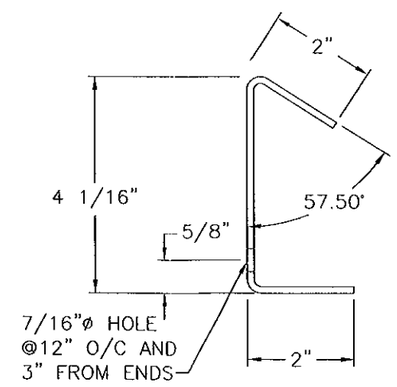


12 / 02D SILL SUPPORT
NTS
MATL: 1/8" FORMED ALUM
LENGTH: 2 @ 78" AND 2 @ 90"

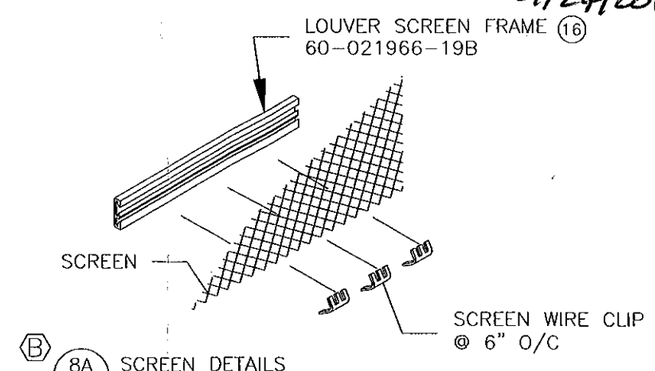


B 8A / 03D SCREEN DETAILS
NTS

FOR OFFICE USE ONLY

PRODUCT RENEWED
as complying with the Florida Building Code
Acceptance No 12-0203.15
Expiration Date 04/26/2017
By
Miami Dade Product Control

William J. Mossie
Registered
PE #71909
State of
Florida
Professional Engineer
01/24/2012

NOTE:
DESCRIPTION LINE ITEMS ON DWG. 05B

| CHANGE LETTER | REVISION DESCRIPTION | DWN. BY: | CHK'D. BY: | APPV'D. BY: | APPV'D. BY: | DATE |
|---|---|---|---|---|---|---|
| E | MODEL NAME CHANGE | DAR | VMA | VMA | | 5-18-6 |
| A | ADDED FLORIDA APPROVAL BOX | DJR | DJR | VMA | | 2-6-2006 |

| | | | | |
|---|---|---|---|---|
| ENGINEER OF RECORD: William J. Mossie, PE | DWN. BY: WRT DATE: 7/11/05 | CHK. BY: DJR DATE: 1/9/06 | APPV'D. BY: DJR DATE: 1/9/06 | APPV'D. BY: DATE: |
| ENGINEERING DISCIPLINE: Civil Engineer | | | | |
| REGISTRATION NUMBER: State of Florida #71909 | | | | |

RUSKIN Mfg Grandview, MO

TITLE: PHB637HDXD E PENTHOUSE DETAILS

PLOT SCALE: NONE

DWG. CERTIFIED BY: DATE:

DWG. NO. 60-021966-04D

Sheet 5 of 13

TABLE 1

| LINE ITEM | DRAWING NUMBER | MATERIAL | DESCRIPTION | RUSKIN NUMBER |
|---|---|---|---|---|
| 1 | 60-021966-06B | 6063-T6 ALUM | 2 1/2"X6"X2 1/2" CHANNEL | – |
| 2 | 60-021966-06B | 6063-T5 ALUM | LOUVER SILL | 70-021130-00B |
| 3 | 60-021966-06B | 6063-T5 ALUM | JAMB FRAME | 70-020691-00B |
| 4 | 60-021966-06B | 6063-T5 ALUM | DRAINABLE BLADE | 70-020560-00B |
| 5 | 60-021966-06B | 6063-T5 ALUM | BLADE BRACE | 70-020568-00B |
| 6 | 60-021966-07B | 6063-T6 ALUM | 6" HVBS | 70-021465-00B |
| 7 | 60-021966-08B | 6063-T6 1/8" ALUM | 3"X6" RECT TUBE ROOF SUPPORT | – |
| 8 | 60-021966-08B | 6063-T6 1/8" ALUM | 1"X4" RECT TUBE SUPPORT (SHORT) | – |
| 9 | 60-021966-08B | 6063-T6 1/8" ALUM | 1"X4" RECT TUBE SUPPORT (LONG) | – |
| 10 | 60-021966-08B | 6063-T5 1/8" ALUM | WATER SEAL | – |
| 11 | 60-021966-09B | 3003-T14 3/8" ALUM | SPECIAL LIFTING LUG | – |
| 12 | 60-021966-10B | 6063-T5 .080" ALUM | LH CORNER FLASHING | – |
| 13 | 60-021966-10B | 6063-T5 .080" ALUM | RH CORNER FLASHING | – |
| 14 | 60-021966-01B | 6063-T6 1/4" ALUM | 2"X2"X1/4"X84" ANGLE | – |
| 15 | 60-021966-09B | 6063-T5 ALUM | END CAP 12" LONG | 70-021389-00B |
| 16 | 60-021966-09B | 6063-T5 ALUM | SCREEN FRAME | 70-021197-00A |
| 17 | – | PLATED STEEL | #10-16X1" TEK SCREW | – |
| 18A | 60-021966-09B | 6063-T5 ALUM | 78" LONG SILL SUPPORT | – |
| 18B | 60-021966-09B | 6063-T5 ALUM | 90" LONG SILL SUPPORT | – |
| 19 | 60-021966-11B | GALV STL | 2" WIDE X3/16" X 87" DIAGONAL STRAP | – |
| 20 | 60-021966-11B | 3003-H14 .080" ALUM | ROOF SKIN .08" THK | – |
| (B) 21 | 60-021966-11B | 5052 ALUM | (F) 1581A165 4X96 HINGE-1/8" THK, 3/8" PIN, 2" KNUCKLE | – |
| 22 | 60-021966-11B | 3003-H14 ALUM | 1 1/2"X1 1/2"X1/8"X2" CLIP ANGLE | 85-020366-00B |
| (G) 23 | – | PLATED STEEL | 5/8"X1" HHB W/ WASHER, LOCKWASHER, & HEX NUT | – |
| (G) 24 | – | PLATED STEEL | 1/4"X1" HHB W/ LOCKWASHER, & HEX NUT | – |
| 25 | 60-021966-11B | GALV STL | 2" WIDE X3/16" X 88" DIAGONAL STRAP | – |
| (G) 26 | – | PLATED STEEL | 3/8" X 1 1/2" HHB W/ WASHER, LOCKWASHER, & HEX NUT | – |
| (B) 26A | – | PLATED STEEL | 3/8" X 1 1/2" PLATED STEEL SELF TAPPING SCREW | |
| 27 | 60-021966-12B | 6063-T5 ALUM | 4 7/16"X 95 7/8"X .080" HINGED DOOR END PLATE | – |
| (B) 28 | | PLATED STEEL | #10 WASHER | |
| (B) 29 | | 3003-H14 ALUM | FILLER BAR 1/8" THK 9" LONG | – |

(B)

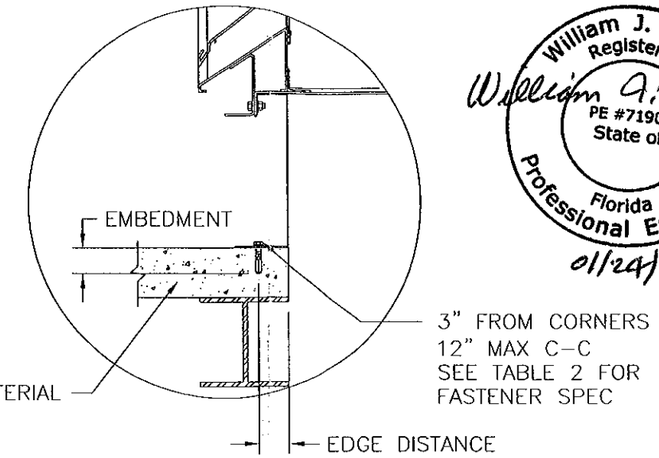


(F) (G) CURB ANCHOR DETAILS

William J. Mossie
Registered
PE #71909
State of
Florida
Professional Engineer
01/24/2012

FOR OFFICE USE ONLY

PRODUCT RENEWED
as complying with the Florida
Building Code
Acceptance No 17-0203.15
Expiration Date 04/26/2017
By
Miami Dade Product Control

TABLE 2 (F)

| BASE MATERIAL | FASTENER TYPE | SPECIAL REQUIREMENT |
|---|---|---|
| TIMBER FRAME | 5/16" DIA. LAG SCREW | 3" MINIMUM EMBEDMENT, 1 1/2" EDGE DISTANCE |
| STEEL DECKING | 3/8" DIA. SELF-TAPPING SCREW | 10 GAUGE MINIMUM THICKNESS FOR BASE MATERIAL |
| CONCRETE | 3/8" DIA. HILTI KWIK BOLT II EXP. ANCHOR OR EQUAL | 2 1/2" MINIMUM EMBEDMENT AND EDGE DISTANCE, 2000 PSI MIN CONCRETE |

| CHANGE LETTER | REVISION DESCRIPTION | DWN. BY: | CHK'D. BY: | APPV'D. BY: | APPV'D. BY: | DATE |
|---|---|---|---|---|---|---|
| (G) | REVISED CURB ANCHOR DETAIL AND SPELLING FOR 23, 24 & 26 | RAT | | | | 9/18/07 |
| (F) | REVISED HINGE #, PROVIDED ANCHOR DETAILS | DJR | VMA | VMA | | 8-28-06 |
| (E) | MODEL NAME CHANGE | DAR | VMA | VMA | | 5-18-6 |
| (B) | MODIFIED DWG NUMBER COLUMN DATA | RFM | DJR | VMA | | 5-4-06 |
| (A) | MODIFIED DWG NUMBER COLUMN DATA | DJR | DJR | VMA | | 2-6-2006 |

| ENGINEER OF RECORD | DWN. BY: WRT | CHK. BY: DJR | APPV'D. BY: DJR | APPV'D. BY: |
|---|---|---|---|---|
| William J. Mossie, PE | DATE: 12/16/05 | DATE: 1/9/06 | DATE: 1/9/06 | DATE: |
| ENGINEERING DISCIPLINE: Civil Engineer | | | | |
| REGISTRATION NUMBER: State of Florida #71909 | | | | |

RUSKIN SWARTWOUT
3900 DR. GREAVES RD
GRANDVIEW, MO 64030
PROPRIETARY INFORMATION

PLOT SCALE: NONE

DWG. CERTIFIED
BY:
DATE:

TITLE: PHB637HDXD (E) PENTHOUSE SPECS, NOTES AND DETAILS

DWG. NO. 60-021966-05B
Sheet 6 of 13

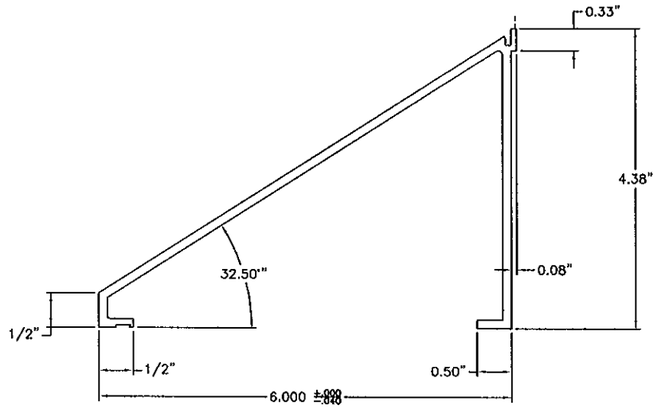


PLANT REF: 70-021130-00B

ITEM 2 – ALUMINUM SILL
NTS

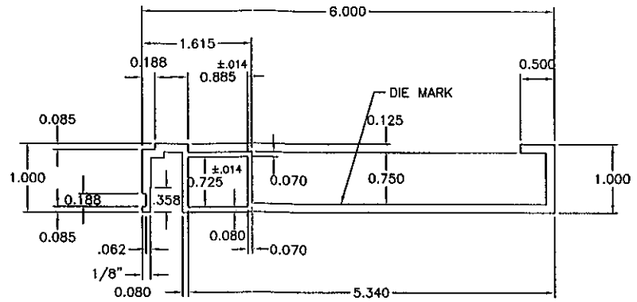


PLANT REF: 70-020691-00B

ITEM 3 – ALUMINUM JAMB
NTS

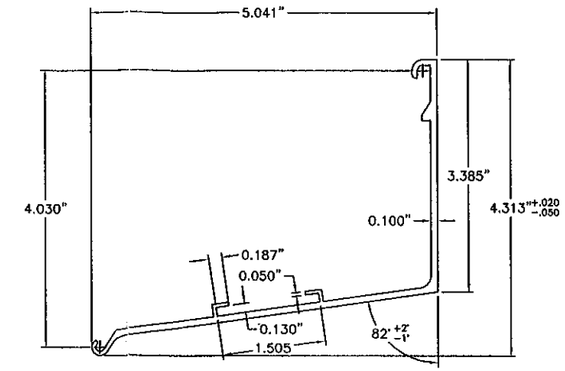


PLANT REF: 70-020568-00B

ITEM 5 – ALUMINUM BLADE BRACE
NTS

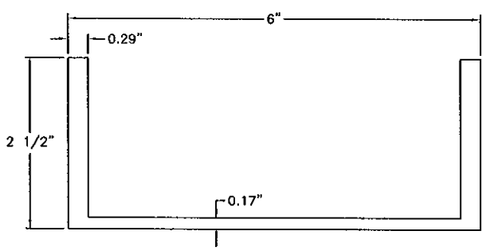


ITEM 1 – ALUMINUM HEAD CHANNEL
NTS

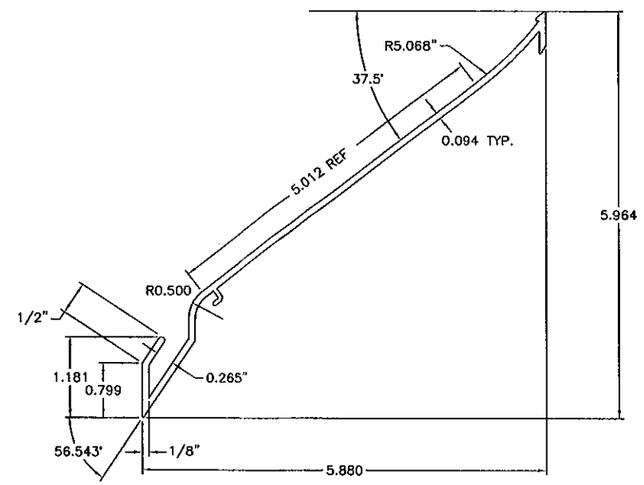


PLANT REF: 70-021045-00B

ITEM 4 – ALUMINUM DRAINABLE BLADE
NTS

NOTES:
1. REF 60-021966-05B FOR MATERIAL.

William J. Mossie
Registered
PE #71909
State of
Florida
Professional Engineer
01/24/2012

FOR OFFICE USE ONLY

PRODUCT RENEWED
as complying with the Florida
Building Code
Acceptance No 12-0203.15
Expiration Date 04/26/2017
By
Miami-Dade Product Control

| ENGINEER OF RECORD | | | |
|---|---|---|---|
| William J. Mossie, PE | | | |
| ENGINEERING DISCIPLINE | | | |
| Civil Engineer | | | |
| REGRISTRATION NUMBER | | | |
| State of Florida #71909 | | | |
| DWN. BY: WRT | CHK. BY: DJR | APPV'D. BY: DJR | APPV'D. BY: |
| DATE: 12/16/05 | DATE: 1/9/06 | DATE: 1/9/06 | DATE: |

| CHANGE LETTER | REVISION DESCRIPTION | DWN. BY: | CHK'D. BY: | APPV'D. BY: | APPV'D. BY: | DATE |
|---|---|---|---|---|---|---|
| E | MODEL NAME CHANGE | DAR | VMA | VMA | | 5-18-6 |
| B | CHANGED DWG # TO 70-020691-00B | RFM | DJR | VMA | | 5-4-06 |
| A | CHANGED DWG CONTENT | DJR | DJR | VMA | | 2-6-2006 |

RUSKIN
SWARTWOUT
3900 DR. GREAVES RD
GRANDVIEW, MO 64030
PROPRIETARY INFORMATION

PLOT SCALE
NONE

DWG. CERTIFIED
BY:
DATE:

TITLE
PHB637HDXD (E) PENTHOUSE
PART DETAILS

DWG. NO.
60-021966-06B
Sheet 7 of 13

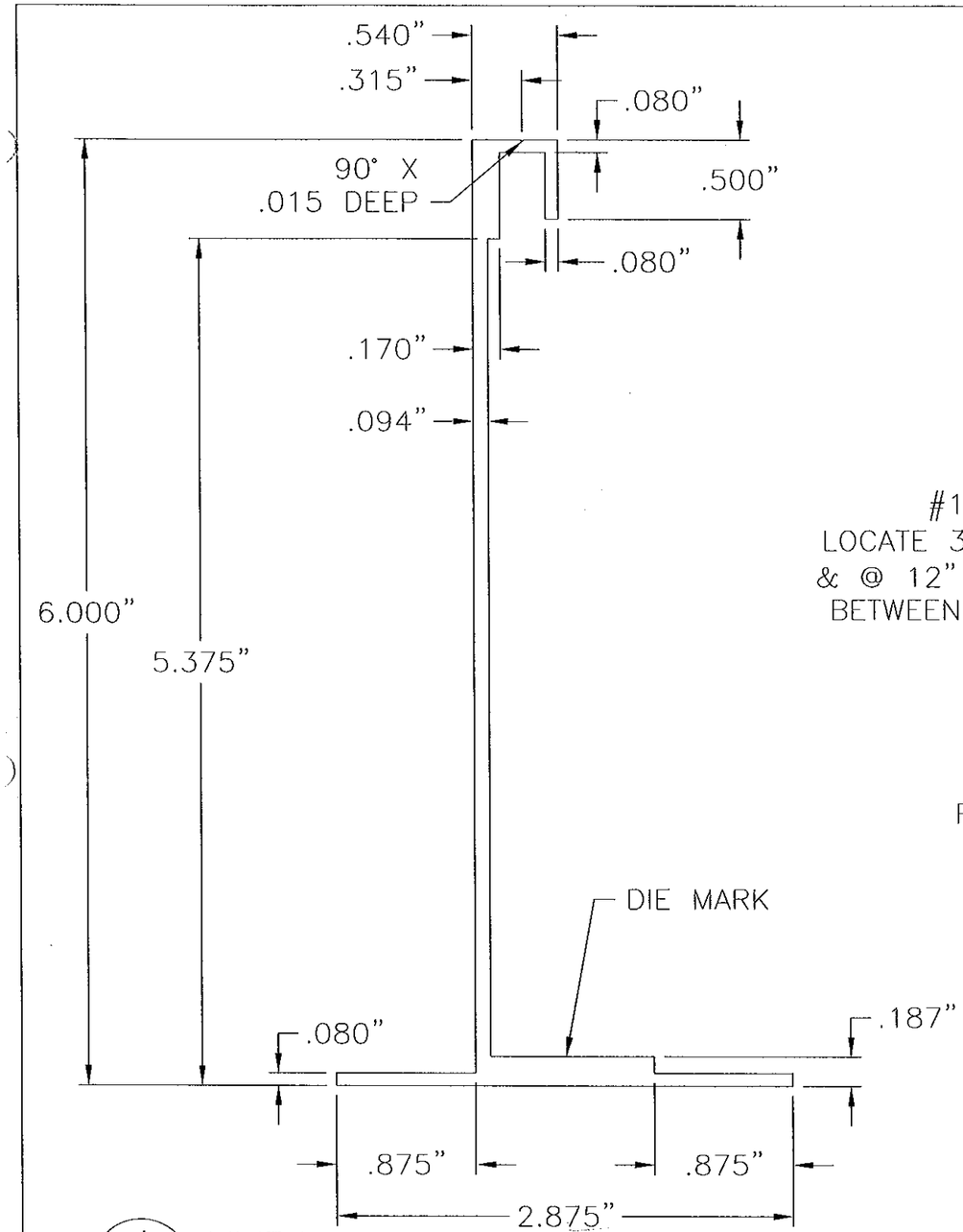


1 / – HVBS
NTS

PLANT REF: 70–021465–00B

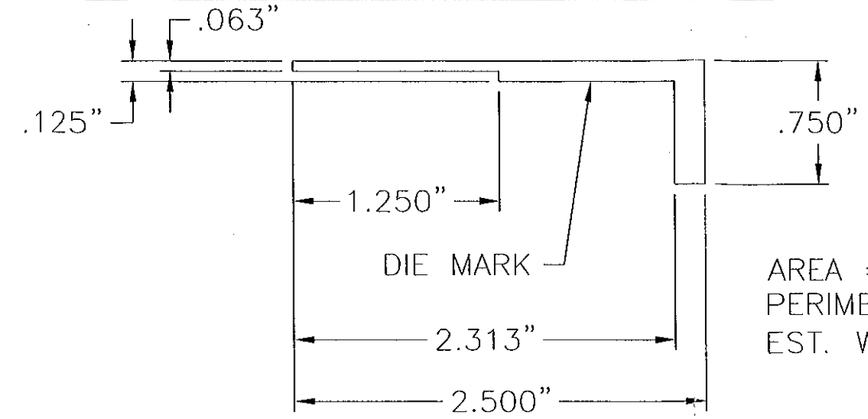


AREA = .352 SQ IN
PERIMETER = 6.500 IN
EST. WEIGHT = .422 LB/FT.

2 / – ADD ON FLANGE
NTS

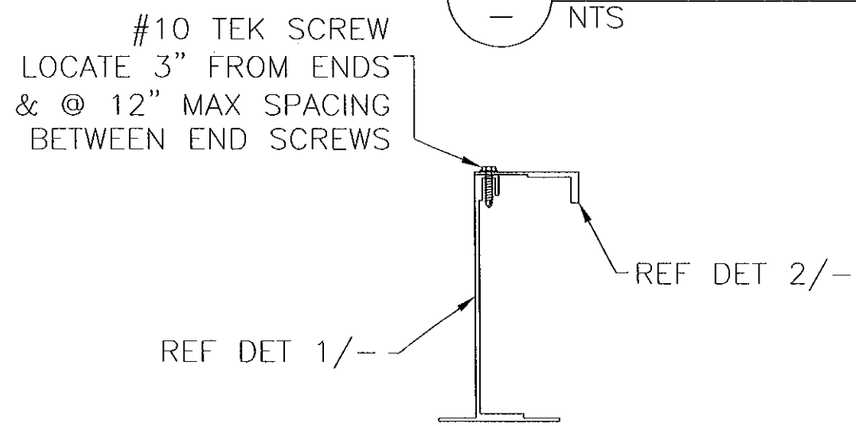


6" HVBS

William J. Mossie
Registered
PE #71909
State of
Florida
Professional Engineer
01/24/2012

FOR OFFICE USE ONLY

PRODUCT RENEWED
as complying with the Florida
Building Code
Acceptance No 12-0203.15
Expiration Date 04/26/2017
By
Miami Dade Product Control

| | |
|---|---|
| ENGINEER OF RECORD | William J. Mossie, PE |
| ENGINEERING DISCIPLINE | Civil Engineer |
| REGRISTRATION NUMBER | State of Florida #71909 |

| DWN. BY: | CHK. BY: | APPV'D. BY: | APPV'D. BY: |
|---|---|---|---|
| WRT | DJR | DJR | |
| DATE: 12/16/05 | DATE: 1/9/06 | DATE: 1/9/06 | DATE: |

MATERIAL: 6063–T6 EXTRUDED ALUMINUM

| CHANGE LETTER | REVISION DESCRIPTION | DWN. BY: | CHK'D. BY: | APPV'D. BY: | APPV'D. BY: | DATE |
|---|---|---|---|---|---|---|
| E | MODEL NAME CHANGE | DAR | VMA | VMA | | 5-18-6 |
| A | CHANGED DWG CONTENT | DJR | DJR | VMA | | 2-6-2006 |

RUSKIN SWARTWOUT
3900 DR. GREAVES RD
GRANDVIEW, MO 64030
PROPRIETARY INFORMATION

PLOT SCALE: NONE

DWG. CERTIFIED
BY:
DATE:

TITLE
E PHB637HDXD
6" HVBS
W/ ADD ON FLANGE

DWG. NO.
60-021966-07B
Sheet 8 of 13

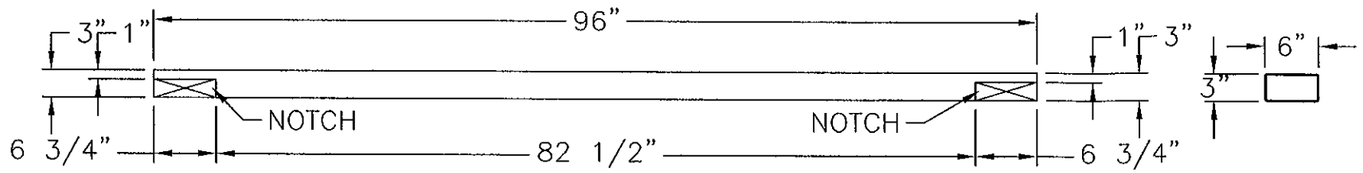


ITEM 7 – 3"X6" ROOF RAFTER
NTS

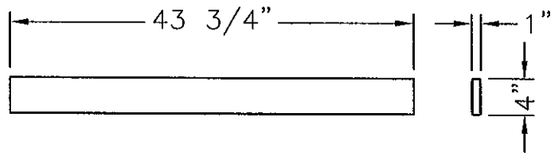


ITEM 8 – 1"X4" ROOF RAFTER
NTS

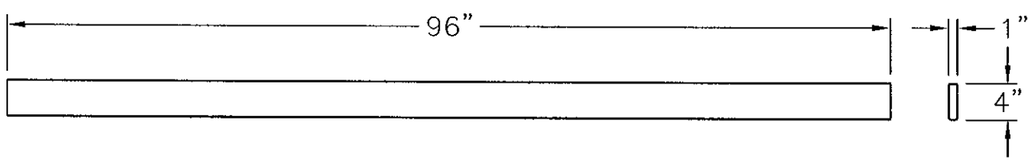


ITEM 9 – 1"X4" ROOF RAFTER
NTS

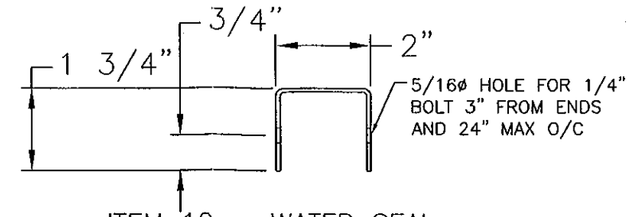


ITEM 10 – WATER SEAL
NTS
LENGTH: 96 7/16"

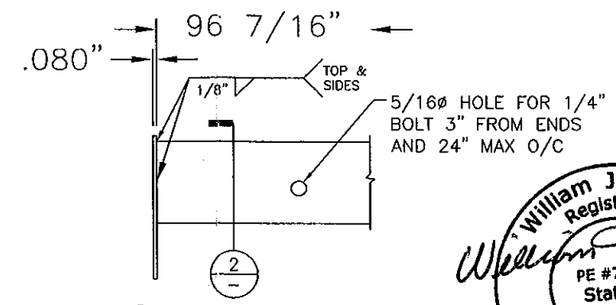


1 WATER SEAL AT END
NTS

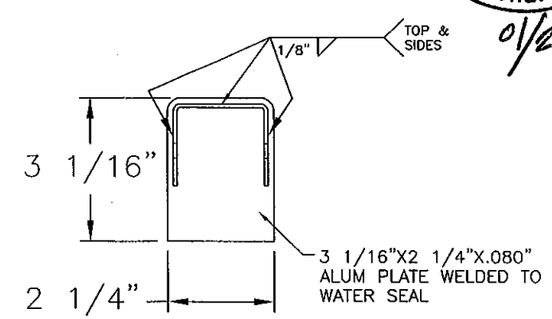


2 WATER SEAL AT END DETAIL
NTS

William J. Mossie
Registered
PE #71909
State of
Florida
Professional Engineer
01/24/2012

NOTES:
1. REF 60-021966-05B FOR MATERIAL.

FOR OFFICE USE ONLY

PRODUCT RENEWED
as complying with the Florida
Building Code
Acceptance No 12-0203.15
Expiration Date 04/26/2017
By
Miami Dade Product Control

| | | | | | |
|---|---|---|---|---|---|
| ENGINEER OF RECORD: William J. Mossie, PE | | | | | |
| ENGINEERING DISCIPLINE: Civil Engineer | | | | | |
| REGRISTRATION NUMBER: State of Florida #71909 | | | | | |
| DWN. BY: WRT | CHK. BY: DJR | APPV'D. BY: DJR | APPV'D. BY: | | |
| DATE: 12/16/05 | DATE: 1/9/06 | DATE: 1/9/06 | DATE: | | |

| CHANGE LETTER | REVISION DESCRIPTION | DWN. BY: | CHK'D. BY: | APPV'D. BY: | APPV'D. BY: | DATE |
|---|---|---|---|---|---|---|
| E | MODEL NAME CHANGE | DAR | VMA | VMA | | 5-18-6 |
| A | CHANGED DWG CONTENT | DJR | DJR | VMA | | 2-6-2006 |

RUSKIN SWARTWOUT
3900 DR. GREAVES RD
GRANDVIEW, MO 64030
PROPRIETARY INFORMATION

PLOT SCALE: NONE

DWG. CERTIFIED
BY:
DATE:

TITLE: PHB637HDXD (E) PENTHOUSE PART DETAILS

DWG. NO. 60-021966-08B
Sheet 9 of 13

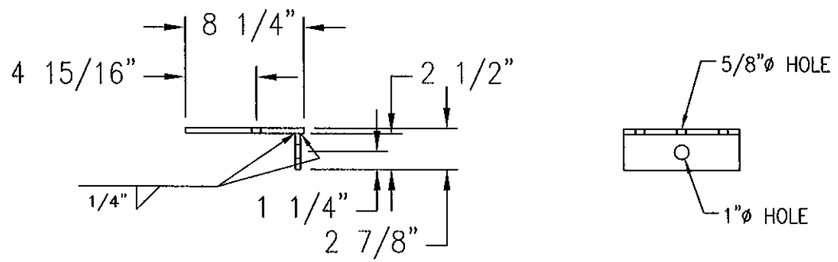


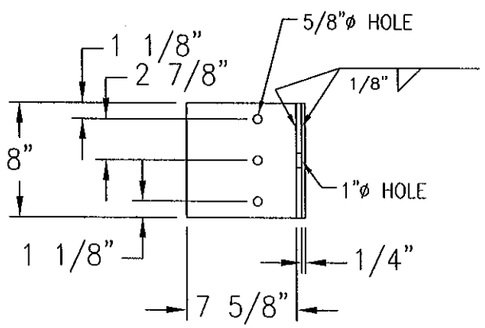


ITEM 11 – SPECIAL LIFTING LUG

NTS

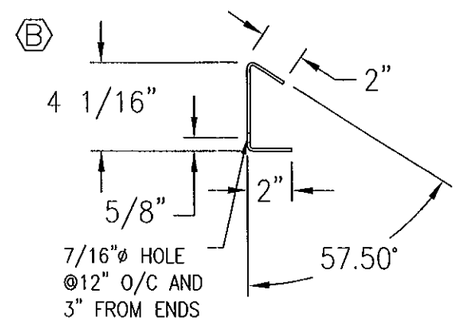


ITEM 18A/18B – SILL SUPPORT

NTS – 2 @ 78" LONG AND 2 @ 90" LONG

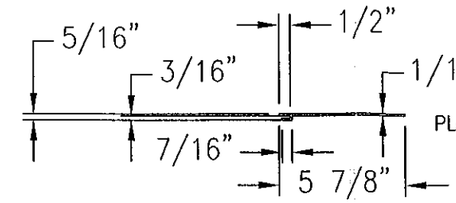


PLANT REF: 70-021389-00B

ITEM 15 – END CAP

NTS

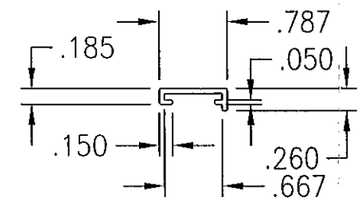


PLANT REF: 70-021197-00B

ITEM 16 – SCREEN FRAME

NTS

NOTES:

1. REF 60-021966-05B FOR MATERIAL.

William J. Mossie Registered PE #71909 State of Florida Professional Engineer

01/24/2012

FOR OFFICE USE ONLY

PRODUCT RENEWED
as complying with the Florida
Building Code
Acceptance No 12-0203.15
Expiration Date 04/26/2017
By
Miami Dade Product Control

| ENGINEER OF RECORD | | | |
|---|---|---|---|
| William J. Mossie, PE | | | |
| ENGINEERING DISCIPLINE | | | |
| Civil Engineer | | | |
| REGISTRATION NUMBER | | | |
| State of Florida #71909 | | | |
| DWN. BY: WRT | CHK. BY: DJR | APPV'D. BY: DJR | APPV'D. BY: |
| DATE: 12/16/05 | DATE: 1/9/06 | DATE: 1/9/06 | DATE: |

| CHANGE LETTER | REVISION DESCRIPTION | DWN. BY: | CHK'D. BY: | APPV'D. BY: | APPV'D. BY: | DATE |
|---|---|---|---|---|---|---|
| E | MODEL NAME CHANGE | DAR | VMA | VMA | | 5-18-6 |
| B | DELETE DIM. | RFM | DJR | VMA | | 5-4-06 |
| A | CHANGED DWG CONTENT | DJR | DJR | VMA | | 2-6-2006 |

RUSKIN SWARTWOUT

3900 DR. GREAVES RD
GRANDVIEW, MO 64030
PROPRIETARY INFORMATION

PLOT SCALE: NONE

DWG. CERTIFIED
BY:
DATE:

TITLE: PHB637HDXD (E) PENTHOUSE PART DETAILS

DWG. NO. 60-021966-09B

Sheet 10 of 13

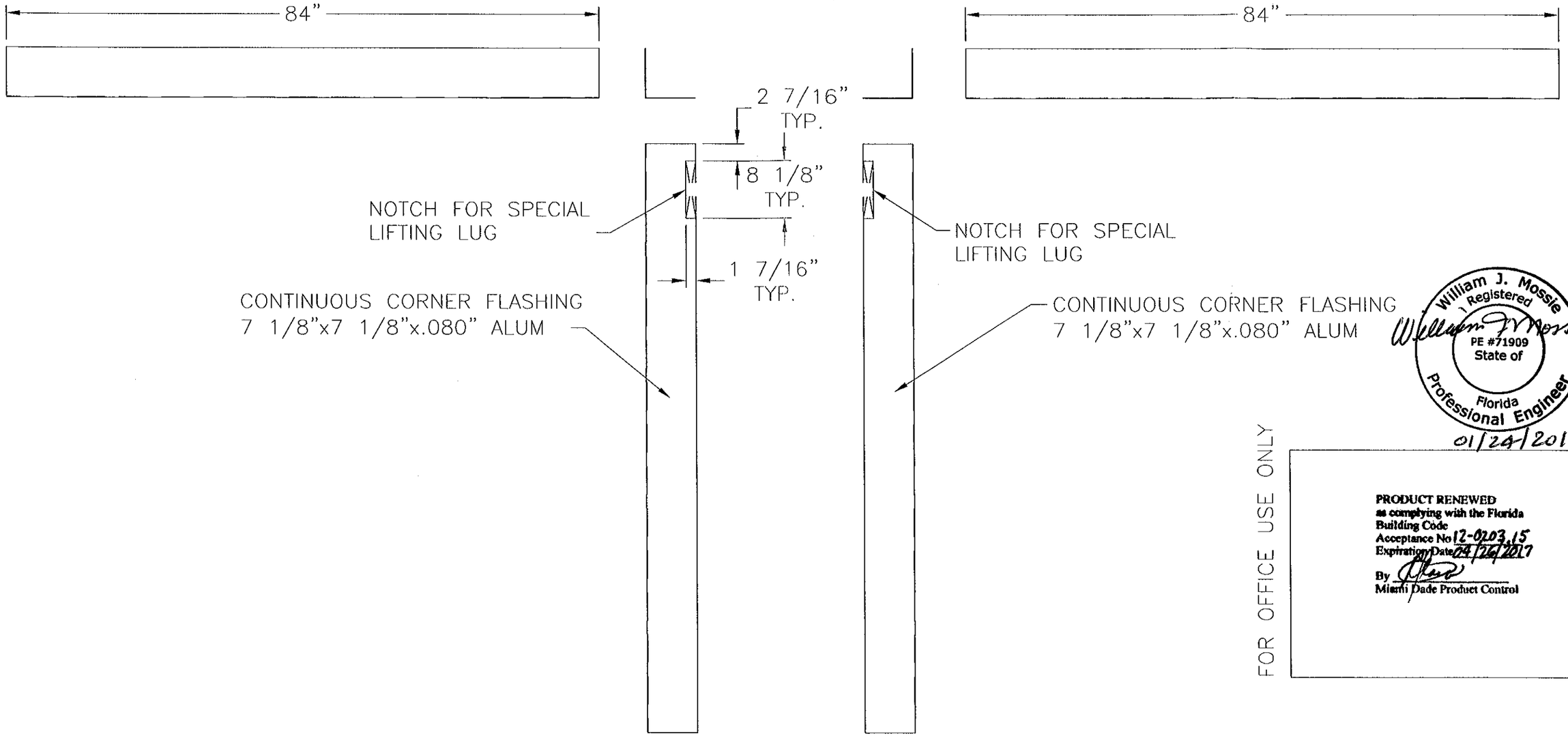


LEFT HAND CORNER FLASHING
NTS

RIGHT HAND CORNER FLASHING
NTS

William J. Mossie Registered PE #71909 State of Florida Professional Engineer
01/24/2012

FOR OFFICE USE ONLY

PRODUCT RENEWED
as complying with the Florida Building Code
Acceptance No 12-0203.15
Expiration Date 04/26/2017
By
Miami Dade Product Control

NOTES:
1. REF 60-021966-05B FOR MATERIAL.

| CHANGE LETTER | REVISION DESCRIPTION | DWN. BY: | CHK'D. BY: | APPV'D. BY: | APPV'D. BY: | DATE |
|---|---|---|---|---|---|---|
| E | MODEL NAME CHANGE | DAR | VMA | VMA | | 5-18-6 |
| A | CHANGED DWG CONTENT | DJR | DJR | VMA | | 2-6-2006 |

| | | | | |
|---|---|---|---|---|
| ENGINEER OF RECORD: William J. Mossie, PE | DWN. BY: WRT DATE: 12/16/05 | CHK. BY: DJR DATE: 1/9/06 | APPV'D. BY: DJR DATE: 1/9/06 | APPV'D. BY: DATE: |
| ENGINEERING DISCIPLINE: Civil Engineer | | | | |
| REGRISTRATION NUMBER: State of Florida #71909 | | | | |

RUSKIN SWARTWOUT
3900 DR. GREAVES RD
GRANDVIEW, MO 64030
PROPRIETARY INFORMATION

TITLE: PHB637HDXD (E) PENTHOUSE CORNER FLASHING .080 3003-H14 ALUMINUM

PLOT SCALE: NONE

DWG. CERTIFIED BY: DATE:

DWG. NO. 60-021966-10B
Sheet 11 of 13

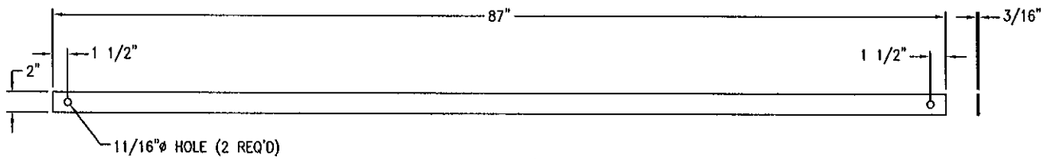


ITEM 19 – 2"X3/16"X87" DIAGONAL STRAP
NTS

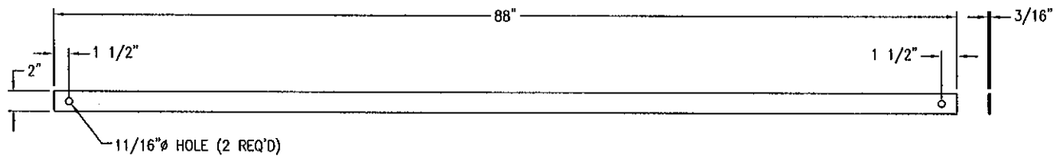


ITEM 25 – 2"X3/16"X88" DIAGONAL STRAP
NTS

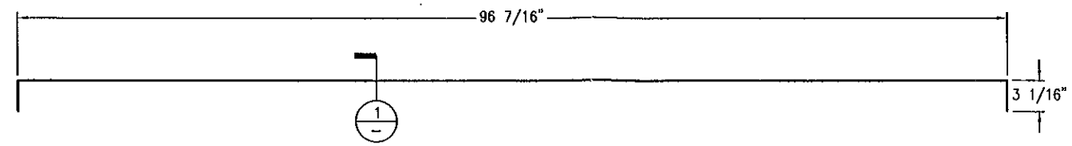


ITEM 20 – PENTHOUSE ROOF SKIN
NTS

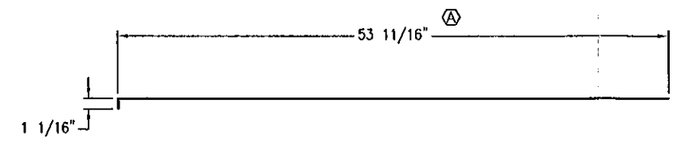


1/– PENTHOUSE ROOF SKIN SECTION
NTS

William J. Mossie
Registered
PE #71909
State of
Florida
Professional Engineer
01/24/2012

FOR OFFICE USE ONLY

PRODUCT RENEWED
as complying with the Florida
Building Code
Acceptance No 12-0203.15
Expiration Date 04/26/2017
By
Miami Dade Product Control

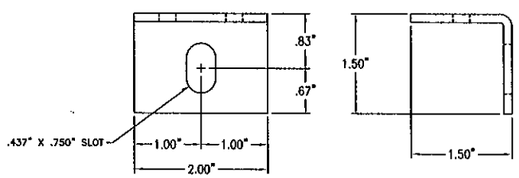


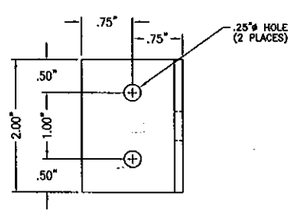


ITEM 22 – 1 1/2"X1 1/2"X1/8"X2" CLIP ANGLE
NTS

PLANT REF: 85-020366-00B

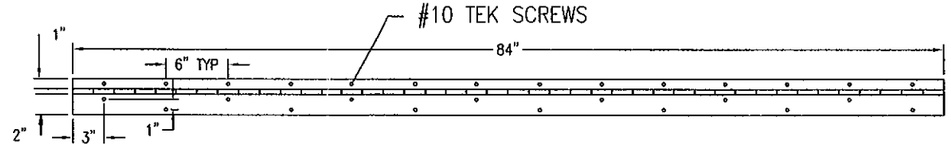


ITEM 21 – HINGE DETAIL
NTS

NOTES:
1. REF 60-021966-05B FOR MATERIAL.

| | | | | | | |
|---|---|---|---|---|---|---|
| E | MODEL NAME CHANGE | DAR | VMA | VMA | | 5-18-6 |
| B | ADDED ITEM 21 | DJR | DJR | VMA | | 5-4-06 |
| A | CHANGED DWG CONTENT | DJR | DJR | VMA | | 2-6-2006 |
| CHANGE LETTER | REVISION DESCRIPTION | DWN. BY: | CHK'D. BY: | APPV'D. BY: | APPV'D. BY: | DATE |

ENGINEER OF RECORD
William J. Mossie, PE

ENGINEERING DISCIPLINE
Civil Engineer

REGRISTRATION NUMBER
State of Florida #71909

| DWN. BY: WRT | CHK. BY: DJR | APPV'D. BY: DJR | APPV'D. BY: |
|---|---|---|---|
| DATE: 12/16/05 | DATE: 1/9/06 | DATE: 1/9/06 | DATE: |

RUSKIN
SWARTWOUT
3900 DR. GREAVES RD
GRANDVIEW, MO 64030
PROPRIETARY INFORMATION

PLOT SCALE
NONE

DWG. CERTIFIED
BY:
DATE:

TITLE
PHB637HDXD (E) PENTHOUSE
PART DETAILS

DWG. NO.
60-021966-11B
Sheet 12 of 13

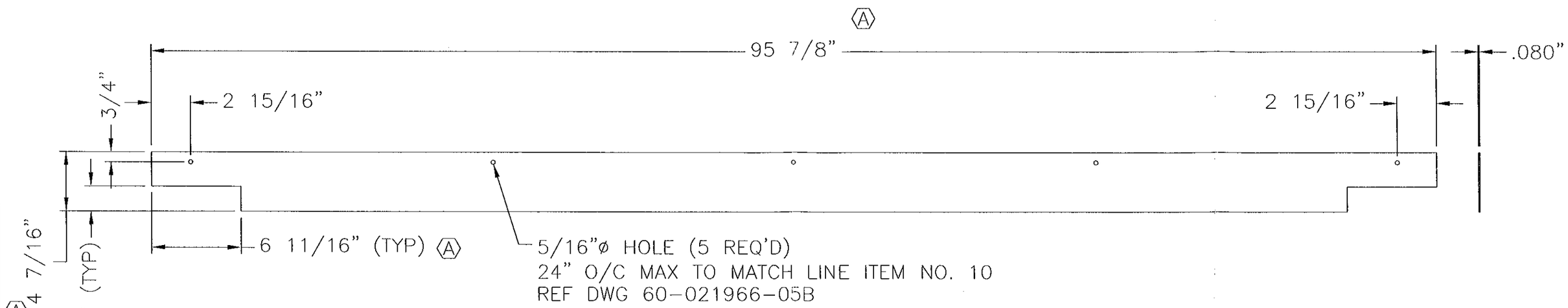


A

## ITEM 27 – 9 1/16"X96"X.080" HINGED DOOR END PLATE

NTS

William J. Mossie
Registered
PE #71909
State of
Florida
Professional Engineer

01/24/2012

NOTES:
1. REF 60-021966-05B FOR MATERIAL.

FOR OFFICE USE ONLY

**PRODUCT RENEWED**
**as complying with the Florida**
**Building Code**
**Acceptance No** 12-0203.15
**Expiration Date** 04/26/2017
**By**
**Miami Dade Product Control**

| CHANGE LETTER | REVISION DESCRIPTION | DWN. BY: | CHK'D. BY: | APPV'D. BY: | APPV'D. BY: | DATE |
|---|---|---|---|---|---|---|
| E | MODEL NAME CHANGE | DAR | VMA | VMA | | 5-18-6 |
| A | CHGD DWG CONTENT, ADDED NOTCHES, REV'D HEIGHT | DJR | DJR | VMA | | 2-3-2006 |

| | | | | |
|---|---|---|---|---|
| ENGINEER OF RECORD: William J. Mossie, PE | DWN. BY: WRT DATE: 12/16/05 | CHK. BY: DJR DATE: 1/9/06 | APPV'D. BY: DJR DATE: 1/9/06 | APPV'D. BY: DATE: |
| ENGINEERING DISCIPLINE: Civil Engineer | | | | |
| REGRISTRATION NUMBER: State of Florida #71909 | | | | |

RUSKIN SWARTWOUT
3900 DR. GREAVES RD
GRANDVIEW, MO 64030
PROPRIETARY INFORMATION

PLOT SCALE: NONE

DWG. CERTIFIED
BY:
DATE:

TITLE: PHB637HDXD (E) PENTHOUSE HINGED DOOR END PLATE 6063-T5 .080 ALUM

DWG. NO. 60-021966-12B
Sheet 13 of 13