MIAMI-DADE COUNTY
DEPARTMENT OF PERMITTING, ENVIRONMENT, AND REGULATORY AFFAIRS (PERA)
BOARD AND CODE ADMINISTRATION DIVISION

MIAMI-DADE COUNTY
PRODUCT CONTROL SECTION
11805 SW 26 Street, Room 208
Miami, Florida 33175-2474
T (786) 315-2590 F (786) 315-2599
www.miamidade.gov/pera/

NOTICE OF ACCEPTANCE (NOA)

General Impact Glass & Windows, Corp.
290 West 78th Road
Hialeah, FL 33014

SCOPE:

This NOA is being issued under the applicable rules and regulations governing the use of construction materials. The documentation submitted has been reviewed and accepted by Miami-Dade County PERA - Product Control Section to be used in Miami Dade County and other areas where allowed by the Authority Having Jurisdiction (AHJ).

This NOA shall not be valid after the expiration date stated below. The Miami-Dade County Product Control Section (In Miami Dade County) and/or the AHJ (in areas other than Miami Dade County) reserve the right to have this product or material tested for quality assurance purposes. If this product or material fails to perform in the accepted manner, the manufacturer will incur the expense of such testing and the AHJ may immediately revoke, modify, or suspend the use of such product or material within their jurisdiction. PERA reserves the right to revoke this acceptance, if it is determined by Miami-Dade County Product Control Section that this product or material fails to meet the requirements of the applicable building code.

This product is approved as described herein, and has been designed to comply with the Florida Building Code, including the High Velocity Hurricane Zone.

DESCRIPTION: Series "20000 High Impact" Aluminum Single Hung Window – L.M.I.

APPROVAL DOCUMENT: Drawing No. **12-005**, titled "Series 20000 High Impact Single Hung Window – Large Missile Impact Resistant", sheets 1 through 9 of 9, dated 01/09/12, with revision #1 dated 01/09/12, prepared by Tilteco, Inc., signed and sealed by Walter A. Tillit, Jr., P.E., bearing the Miami-Dade County Product Control Revision stamp with the Notice of Acceptance number and expiration date by the Miami-Dade County Product Control Section.

MISSILE IMPACT RATING: Large and Small Missile Impact Resistant

LABELING: Each unit shall bear a permanent label with the manufacturer's name or logo, city, state, model/series, and following statement: "Miami-Dade County Product Control Approved", unless otherwise noted herein.

RENEWAL of this NOA shall be considered after a renewal application has been filed and there has been no change in the applicable building code negatively affecting the performance of this product.

TERMINATION of this NOA will occur after the expiration date or if there has been a revision or change in the materials, use, and/or manufacture of the product or process. Misuse of this NOA as an endorsement of any product, for sales, advertising or any other purposes shall automatically terminate this NOA. Failure to comply with any section of this NOA shall be cause for termination and removal of NOA.

ADVERTISEMENT: The NOA number preceded by the words Miami-Dade County, Florida, and followed by the expiration date may be displayed in advertising literature. If any portion of the NOA is displayed, then it shall be done in its entirety.

INSPECTION: A copy of this entire NOA shall be provided to the user by the manufacturer or its distributors and shall be available for inspection at the job site at the request of the Building Official.

This NOA **revises NOA # 09-0319.08** and consists of this page 1 and evidence pages E-1 and E-2, as well as approval document mentioned above.

The submitted documentation was reviewed by **Manuel Perez, P.E.**

MIAMI-DADE COUNTY APPROVED

4/3/12

General Impact Glass & Windows, Corp.

NOTICE OF ACCEPTANCE: EVIDENCE SUBMITTED

A. DRAWINGS

1. Manufacturer's die drawings and sections.
2. Drawing No **12-005**, Sheets 1 through 9 of 9, titled "Series 20000 High Impact Single Hung Window – Large Missile Impact Resistant", dated 01/09/12, with revision #1 dated 01/09/12, prepared by Tilteco, Inc., signed and sealed by Walter A. Tillit, Jr., P.E.

B. TESTS

1. Test reports on: 1) Air Infiltration Test, per FBC, TAS 202-94
   2) Uniform Static Air Pressure Test, Loading per FBC TAS 202-94
   3) Water Resistance Test, per FBC, TAS 202-94
   4) Large Missile Impact Test per FBC, TAS 201-94
   5) Cyclic Wind Pressure Loading per FBC, TAS 203-94
   6) Forced Entry Test, per FBC 2411 3.2.1, TAS 202-94

   along with marked-up drawings and installation diagram of an aluminum single hung window with 5/16" and 7/16" HS laminated glass, prepared by Fenestration Testing Laboratory, Inc., Test Report No.**FTL-5807**, dated 01/21/09, signed and sealed by Michael R. Wenzel, P.E.
   (Submitted under previous NOA#09-0319.08)

C. CALCULATIONS

1. Anchor verification calculations and structural analysis, complying with FBC-2007, prepared by Tilteco, Inc., dated 03/17/09, signed and sealed by Walter A. Tillit, Jr., P.E.
   (Submitted under previous NOA#09-0319.08)
2. Glazing complies with ASTM E1300-04

D. QUALITY ASSURANCE

1. Miami-Dade Department of Permitting, Environment, and Regulatory Affairs (PERA).

E. MATERIAL CERTIFICATIONS

1. Notice of Acceptance No. **11–0624.02** issued to **E.I. DuPont DeNemours & Co., Inc.** for their "**DuPont SentryGlas® Interlayer**" dated 08/25/11, expiring on 01/14/17.
2. Notice of Acceptance No. **11–0624.01** issued to **E.I. DuPont DeNemours & Co., Inc.** for their **"DuPont Butacite® PVB Interlayer"** dated 09/08/11, expiring on 12/11/16.

Manuel Perez, P.E.
Product Control Examiner
NOA No. 12-0206.06
Expiration Date: May 27, 2014
Approval Date: April 12, 2012

NOTICE OF ACCEPTANCE: EVIDENCE SUBMITTED

F. STATEMENTS

1. Statement letter of conformance, complying with FBC-2010, dated January 27, 2012, signed and sealed by Walter A. Tillit, Jr., P.E.
2. Statement letter of no financial interest, dated March 2, 2009, signed and sealed by Walter A. Tillit, P.E.
   (Submitted under previous NOA#09-0319.08)

G. OTHER

1. Notice of Acceptance No. **09-0319.08**, issued to General Impact Glass & Windows, Corp. for their Series "20000 High Impact" Aluminum Single Hung Window – L.M.I., approved on 05/27/09 and expiring on 05/27/14.

Manuel Perez, P.E.
Product Control Examiner
NOA No. 12-0206.06
Expiration Date: May 27, 2014
Approval Date: April 12, 2012

GENERAL NOTES:

1. SERIES 20000 HIGH IMPACT SINGLE HUNG WINDOW LARGE MISSILE IMPACT RESISTANT, SHOWN ON THIS PRODUCT APPROVAL DOCUMENT (P.A.D.) HAS BEEN VERIFIED FOR COMPLIANCE IN ACCORDANCE WITH THE **2007 & 2010** EDITIONS OF THE FLORIDA BUILDING CODE. SERIES 20000 HIGH IMPACT SINGLE HUNG WINDOW LARGE MISSILE IMPACT RESISTANT MAY BE INSTALLED AT HIGH VELOCITY HURRICANE ZONES.

   DESIGN WIND LOADS SHALL BE DETERMINED AS PER SECTIONS **1620** OF THE ABOVE MENTIONED CODES, USING ASCE 7-05 STANDARD FOR INSTALLATIONS UNDER 2007 FBC & ASCE 7-10 FOR INSTALLATIONS UNDER 2010 FBC AND SHALL NOT EXCEED THE MAXIMUM (A.S.D.) DESIGN PRESSURE RATINGS INDICATED ON NOTE 2 BELOW.

   IN ORDER TO VERIFY THE ABOVE CONDITION, ULTIMATE DESIGN WIND LOADS DETERMINED PER ASCE 7-10 SHALL BE FIRST REDUCED TO A.S.D. DESIGN WIND LOADS BY MULTIPLYING THEM BY 0.6 IN ORDER TO COMPARE THESE W/ MAX. (A.S.D.) DESIGN PRESSURE RATINGS INDICATED ON NOTE 2 BELOW.

   IN ORDER TO VERIFY THAT ANCHORS ON THIS P.A.D., AS TESTED, WERE NOT OVERSTRESSED, A 33% INCREASE IN ALLOWABLE STRESS FOR WIND LOADS WAS **NOT** USED IN THEIR ANALYSIS. FASTENERS SPACING IN WOOD HAS BEEN DETERMINED IN ACCORDANCE WITH N.D.S.

   THIS WINDOW'S ADEQUACY FOR IMPACT AND WIND RESISTANCE HAS BEEN VERIFIED IN ACCORDANCE WITH SECTION **1626** OF THE ABOVE MENTIONED CODE AS PER PROTOCOLS TAS-201, TAS-202, TAS-203, PER FENESTRATION TESTING LABORATORY REPORT # **5807** AND AS PER SUBMITTED STRUCTURAL CALCULATIONS, PERFORMED AS PER SECTIONS **1612** & **1615** OF THE FLORIDA BUILDING CODE, 2007 & 2010 EDITIONS RESPECTIVELY.

2. **MAXIMUM A.S.D. DESIGN PRESSURE RATINGS FOR THIS WINDOW SHALL BE AS SHOWN ON SHEET 4 (SCHEDULE #1).**

3. **THIS SERIES 20000 HIGH IMPACT SINGLE HUNG WINDOW LARGE MISSILE IMPACT RESISTANT WILL NOT REQUIRE A HURRICANE PROTECTION DEVICE.**

4. **THIS SERIES 20000 HIGH IMPACT SINGLE HUNG WINDOW LARGE MISSILE IMPACT RESISTANT IS APPROVED FOR AIR AND WATER INFILTRATION (SEE SCHEDULE #1 ON SHEET 4).**

5. SERIES 20000 HIGH IMPACT SINGLE HUNG WINDOW LARGE MISSILE IMPACT RESISTANT SHALL COMPLY WITH SECTIONS 2411.5.1 & 2411.5.2 OF THE FLORIDA BUILDING CODE.

6. ALL ALUMINUM EXTRUSIONS SHALL BE ALUMINUM ASSOCIATION 6063-T6 ALLOY AND TEMPER, WITH Fy= 25.0 ksi MINIMUM. THE THICKNESS OF ALL EXTRUSIONS SHALL BE AS SHOWN ON THIS DRAWING.

7. ALL SCREWS USED FOR ASSEMBLY CONNECTIONS (METAL TO METAL) TO BE STAINLESS STEEL 304 OR 316 AISI SERIES OR CORROSION RESISTANT COATED CARBON STEEL AS PER DIN 50018 WITH 50 ksi YIELD STRENGTH AND 90 ksi TENSILE STRENGTH & SHALL COMPLY W/ FLORIDA BUILDING CODE SECTION 2411.3.3.4.

8. WOOD BUCKS BY OTHERS, MUST BE ANCHORED PROPERLY TO TRANSFER LOADS TO THE BUILDING STRUCTURE. WOOD BUCKS MUST BE SOUTHERN PINE, G = 0.55. AND SHALL COMPLY WITH SECTIONS 2411.3.3.3 & 2326 OF THE 2007 & 2010 EDITIONS OF THE FLORIDA BUILDING CODE.

9. **ANCHOR NOTES:** EMBEDMENT AND EDGE DISTANCE ARE BEYOND ANY FINISH.

   (A) TO EXISTING POURED CONCRETE: (MIN. f'c = 3192 psi), MIN. EDGE DISTANCE (E.D.) = 2 1/2".
   - 1/4"ø TAPCON ANCHOR W/ 1 1/4" MIN. EMBEDMENT, AS MANUFACTURED BY ITW/BUILDEX, INC. (COMPONENT 22), THRU 1" P.T. WOOD BUCK.

   (B) TO EXISTING A.S.T.M. C-90 CONCRETE BLOCK WALL. MIN. EDGE DISTANCE (E.D.) = 2 1/2".
   - 1/4"ø TAPCON ANCHOR W/ 1 1/4" MIN. EMBEDMENT, AS MANUFACTURED BY ITW/BUILDEX, INC. (COMPONENT 22), THRU 1" P.T. WOOD BUCK.

   (C) TO EXISTING 2xP.T. WOOD BUCK. MIN. EDGE DISTANCE (E.D.) = 1".
   - 1/4"ø-14 TEK SCREW ANCHORS W/ 1 1/2" MIN. EMBEDMENT, AS MANUFACTURED BY ITW/BUILDEX, INC (COMPONENT 23).

   (D) TO EXISTING MIN. 1/8" THICK ALUMINUM TUBE (6063-T5 ALLOY) MIN. EDGE DISTANCE (E.D.) = 1/2".
   - 1/4"ø-14 TEK SCREW, AS MANUFACTURED BY ITW/BUILDEX, INC. (COMPONENT 23).

   (E) TO EXISTING MIN. 12 GAGE STEEL MEMBER (ASTM A-500, A-653 OR A-36) MIN. EDGE DISTANCE (E.D.) = 1/2".
   - 1/4"ø-14 TEK SCREW, AS MANUFACTURED BY ITW/BUILDEX, INC. (COMPONENT 23).

10. PROVIDE 1/4" MAX. LOAD BEARING SHIM SPACE (TYP.).

11. REMAINING COMPONENTS FOR THIS ALUMINUM SINGLE HUNG WINDOW SYSTEM SHALL BE AS INDICATED ON BILL OF MATERIALS, SHEET 3 OF THIS DRAWING.

12. SERIES 20000 HIGH IMPACT SINGLE HUNG WINDOW LARGE MISSILE IMPACT RESISTANT MANUFACTURER'S LABEL SHALL BE PLACED ON A READILY VISIBLE LOCATION.
    ONE LABEL SHALL BE PLACED FOR EVERY UNIT. LABEL SHALL READ AS FOLLOWS:

    GENERAL IMPACT GLASS AND WINDOWS, CORP.
    HIALEAH, FLORIDA
    MIAMI-DADE COUNTY PRODUCT CONTROL APPROVED.

13. (a) THIS P.A.D. PREPARED BY THIS ENGINEER IS GENERIC AND DOES NOT PROVIDE INFORMATION FOR A SITE SPECIFIC PROJECT; i.e. WHERE THE SITE CONDITIONS DEVIATE FROM THE P.A.D.

    (b) CONTRACTOR TO BE RESPONSIBLE FOR THE SELECTION, PURCHASE AND INSTALLATION INCLUDING LIFE SAFETY OF THIS PRODUCT, BASED ON THIS P.A.D., PROVIDED HE/SHE DOES NOT DEVIATE FROM THE CONDITIONS DETAILED ON THIS DOCUMENT. CONSTRUCTION SAFETY AT SITE IS THE CONTRACTOR'S RESPONSIBILITY.

    (c) THIS P.A.D. WILL BE CONSIDERED INVALID IF ALTERED BY ANY MEANS.

    (d) ORIGINAL P.A.D. SHALL BEAR THE DATE AND ORIGINAL SEAL AND SIGNATURE OF THE PROFESSIONAL ENGINEER OF RECORD THAT PREPARED IT.

PRODUCT REVISED
as complying with the Florida Building Code
Acceptance No 12-0206.06
Expiration Date MAY 27, 2014
By Manuel Perez
Miami-Dade Product Control

MIAMI-DADE COUNTY

WALTER A. TILLIT JR. LICENSE No. 44167 STATE OF FLORIDA PROFESSIONAL ENGINEER

P.E. SEAL/SIGNATURE/DATE

© 2012 TILTECO INC.

TILTECO INC.
TILLIT TESTING & ENGINEERING COMPANY
6355 N.W. 36th. St., Ste. 305, VIRGINIA GARDENS, Fl 33166
Phone : (305)871-1530 . Fax : (305)871-1531
e-mail: tilteco@aol.com
EB-0006719
WALTER A. TILLIT Jr., P.E.
FLORIDA Lic. 44167

FLORIDA BUILDING CODE (High Velocity Hurricane Zone)

SERIES 20000 HIGH IMPACT SINGLE HUNG WINDOW
LARGE MISSILE IMPACT RESISTANT

GENERAL IMPACT GLASS & WINDOWS
The Clear Solution
290 WEST 78 ROAD
HIALEAH, FL. 33014
PHONE: (305) 558-8103
FAX: (305) 558-6665
www.generalimpact.com

REV. NO	DESCRIPTION	DATE	REV. No	DESCRIPTION	DATE
1	OLD 07-307	01/09/12	3		
2			4		

DRAWN BY: J.A./F.P./M.C.V./A.C
01/09/12 DATE
12-005 DRAWING No
SHEET 1 OF 9

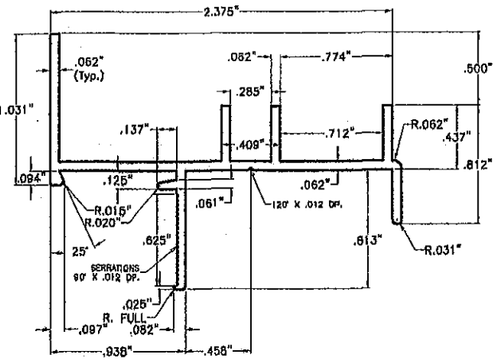

① FRAME HEAD
SCALE 1" = 1"
6063-T6 ALLOY & TEMPER

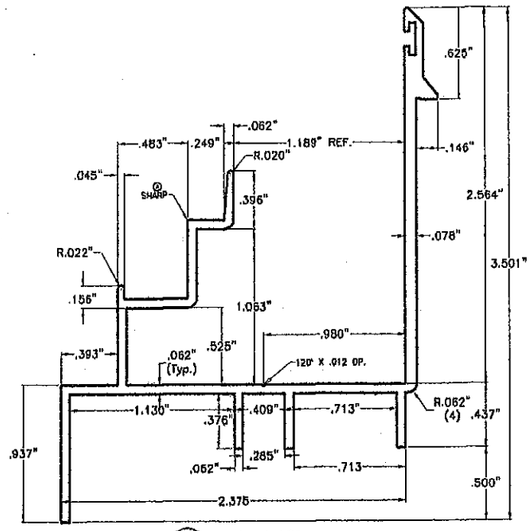

② FRAME SILL
SCALE 1" = 1"
6063-T6 ALLOY & TEMPER

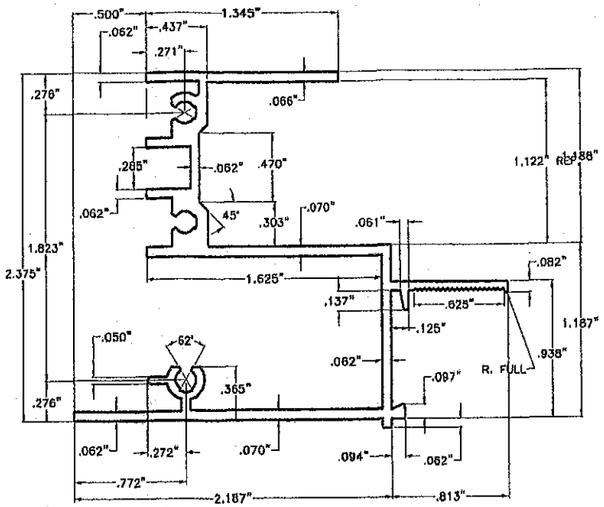

③ FRAME JAMB
SCALE 1" = 1"
6063-T6 ALLOY & TEMPER

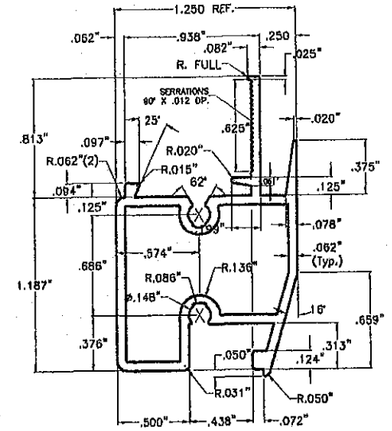

④ FIXED MTG. RAIL
SCALE 1" = 1"
6063-T6 ALLOY & TEMPER

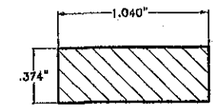

4I ALUM. INSERT BAR FOR ④
SCALE 1" = 1"
6063-T6 ALLOY & TEMPER

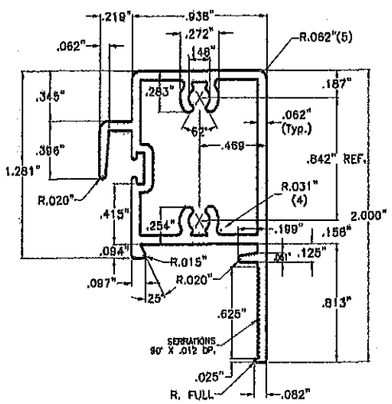

⑤ VENT TOP RAIL
SCALE 1" = 1"
6063-T6 ALLOY & TEMPER

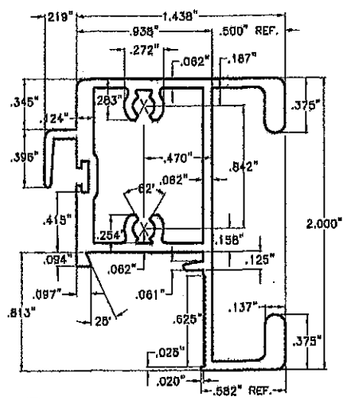

5A H.D. VENT TOP RAIL
SCALE 1" = 1"
6063-T6 ALLOY & TEMPER

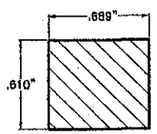

5AI ALUM. INSERT BAR FOR 5A
SCALE 1" = 1"
6063-T6 ALLOY & TEMPER

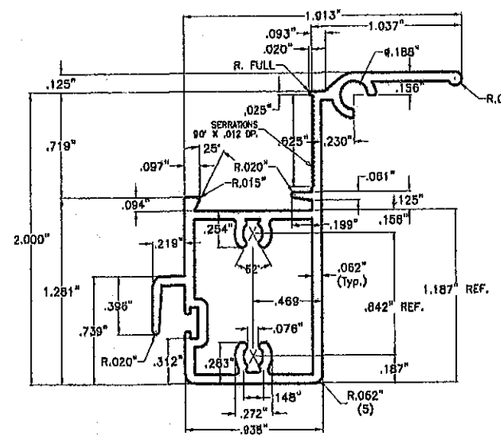

⑥ VENT BOTTOM RAIL
SCALE 1" = 1"
6063-T6 ALLOY & TEMPER

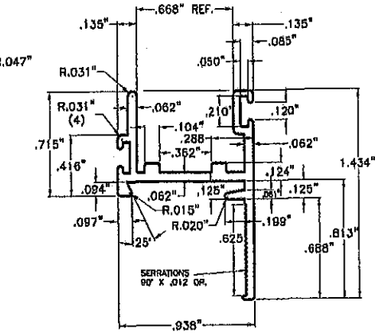

⑦ VENT SIDE RAIL
SCALE 1" = 1"
6063-T6 ALLOY & TEMPER

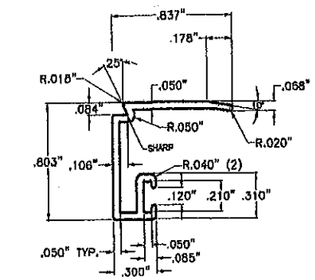

⑧ GLAZING BEAD FOR 5/16" GLASS
SCALE 1" = 1"
6063-T6 ALLOY & TEMPER

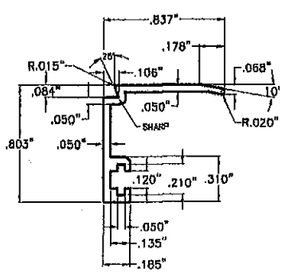

8A GLAZING BEAD FOR 7/16" GLASS
SCALE 1" = 1"
6063-T6 ALLOY & TEMPER

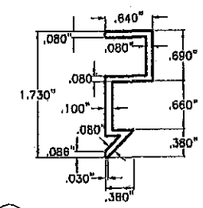

⑬ SASH CAM
SCALE 1/2" = 1"
6063-T6 ALLOY & TEMPER

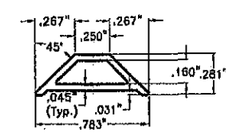

24 COLONIAL MUNTIN
SCALE 1" = 1"
6063-T6 ALLOY & TEMPER

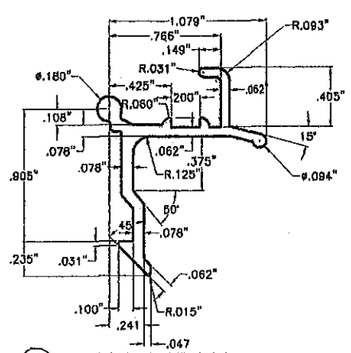

⑨ VENT LATCH
SCALE 1" = 1"
6063-T6 ALLOY & TEMPER

COMPONENTS

FLORIDA BUILDING CODE (High Velocity Hurricane Zone)

PRODUCT REVISED
as complying with the Florida Building Code
Acceptance No 12-0206.06
Expiration Date MAY 27, 2014
By Manuel Barrera
Miami Dade Product Control

MIAMI-DADE COUNTY

WALTER A. TILLIT JR. LICENSE No. 44167 STATE OF FLORIDA PROFESSIONAL ENGINEER
SEAL/SIGNATURE/DATE

© 2012 TILTECO INC.

TILTECO INC.
TILLIT TESTING & ENGINEERING COMPANY
6355 N.W. 36th. St., Ste. 305, VIRGINIA GARDENS, Fl 33166
Phone : (305)871-1530 . Fax : (305)871-1531
e-mail: tilteco@aol.com
EB-0006719
WALTER A. TILLIT Jr., P.E.
FLORIDA Lic. 44167

SERIES 20000 HIGH IMPACT SINGLE HUNG WINDOW
LARGE MISSILE IMPACT RESISTANT

GENERAL IMPACT GLASS & WINDOWS
The Clear Solution
290 WEST 78 ROAD
HIALEAH, FL. 33014
PHONE: (305) 558-8103
FAX: (305) 558-6665
www.generalimpact.com

REV. NO	DESCRIPTION	DATE	REV. No	DESCRIPTION	DATE
1	OLD 07-307	01/09/12	3		
2			4		

DRAWN BY: A./F.P./N.C.V./A.G
01/09/12
DATE
12-005
DRAWING No
SHEET 2 OF 9

BILL OF MATERIALS

ITEM #	DESCRIPTION	MATERIAL
1	FRAME HEAD	6063-T6
2	FRAME SILL	6063-T6
3	FRAME JAMB	6063-T6
4	FIXED MEETING RAIL	6063-T6
4I	ALUMINUM INSERT BAR FOR 4	6063-T6
5	VENT TOP RAIL	6063-T6
5A	H.D VENT TOP RAIL	6063-T6
5AI	ALUMINUM INSERT BAR FOR 5A	6063-T6
6	VENT BOTTOM RAIL	6063-T6
7	VENT SIDE RAIL	6063-T6
8	GLAZING BEAD FOR 5/16" GLASS	6063-T6
8A	GLAZING BEAD FOR 7/16" GLASS	6063-T6
9	VENT LATCH @ 6" FROM ENDS	6063-T6
10	LATCH SPRING	ST. STEEL
11	GLAZING BULB VINYL	NEOPRENE
12	FRAME & VENT ASSEMBLY SCREWS, (20) #8 x 1" PH SMS	ST. STEEL
13	SASH CAM	6063-T6
14	VENT WEATHER STRIPPING	-
15	FRAME SILL WEATHER STRIPPING	-
16	BLOCK & TACKLE BALANCE	
17	BUMPON SPACER, 1/4" DIAMETER HALF SPHERE, CLEAR, 3" FROM CORNERS MAX. AND 12" O.C. (MAX.), AT MID-GLASS BITE ELEVATION, BY FRANK LOWE RUBBEL AND GASKET FLB-28, CLEAR.	SILICONE
18	SASH STOP	-
19	GLASS, 0.326" OVERALL LAMINATED GLASS WITH (1) 1/8" HEAT STRENGTHENED GLASS + A 0.090" INNER LAYER FILM DUPONT BUTACITE PVB, INTERLAYER BY EI DUPONT DE NEMOURS, + (1) 1/8" HEAT STRENGTHENED GLASS	-
19A	GLASS, 0.444" OVERALL LAMINATED GLASS WITH (1) 3/16" HEAT STRENGTHENED GLASS + A 0.090" INNER LAYER FILM DUPONT BUTACITE PVB, INTERLAYER BY EI DUPONT DE NEMOURS, + (1) 3/16" HEAT STRENGTHENED GLASS	-
19B	GLASS, 0.444" OVERALL LAMINATED GLASS WITH (1) 3/16" HEAT STRENGTHENED GLASS + A 0.090" INNER LAYER FILM SENTRY GLASS PLUS, INTERLAYER BY EI DUPONT DE NEMOURS, + (1) 3/16" HEAT STRENGTHENED GLASS	-
20	DOW CORNING 795	STRUCTURAL SILICONE
21	SEALANT, FIXED PANEL FRAME. FRAME ALL AROUND (EXTERIOR AND INTERIOR), FRAME CORNERS AND VENT CORNERS.	SILICONE
22	ANCHORS, 1/4"ø TAPCON ANCHOR BY ITW BUILDEX, INC.	STEEL
23	ANCHORS, 1/4"ø-14 TEK SCREW BY ITW BUILDEX, INC TO WOOD BUCK, ALUMNUM TUBE OR STEEL MEMBER.	STEEL
24	COLONIAL MUNTIN (OPTIONAL)	6063-T5
25	(4) NYLON GUIDES LOCATED AT VENT JAMB STILES AT 4 1/4" AND 35" FROM BOTTOM USING (1) #6 X 1/2" PH SMS.	NYLON
26	(2) NYLON GUIDES LOCATED AT EACH END OF VENT MEETING RAIL USING (2) #8 X 1" PH SMS.	NYLON

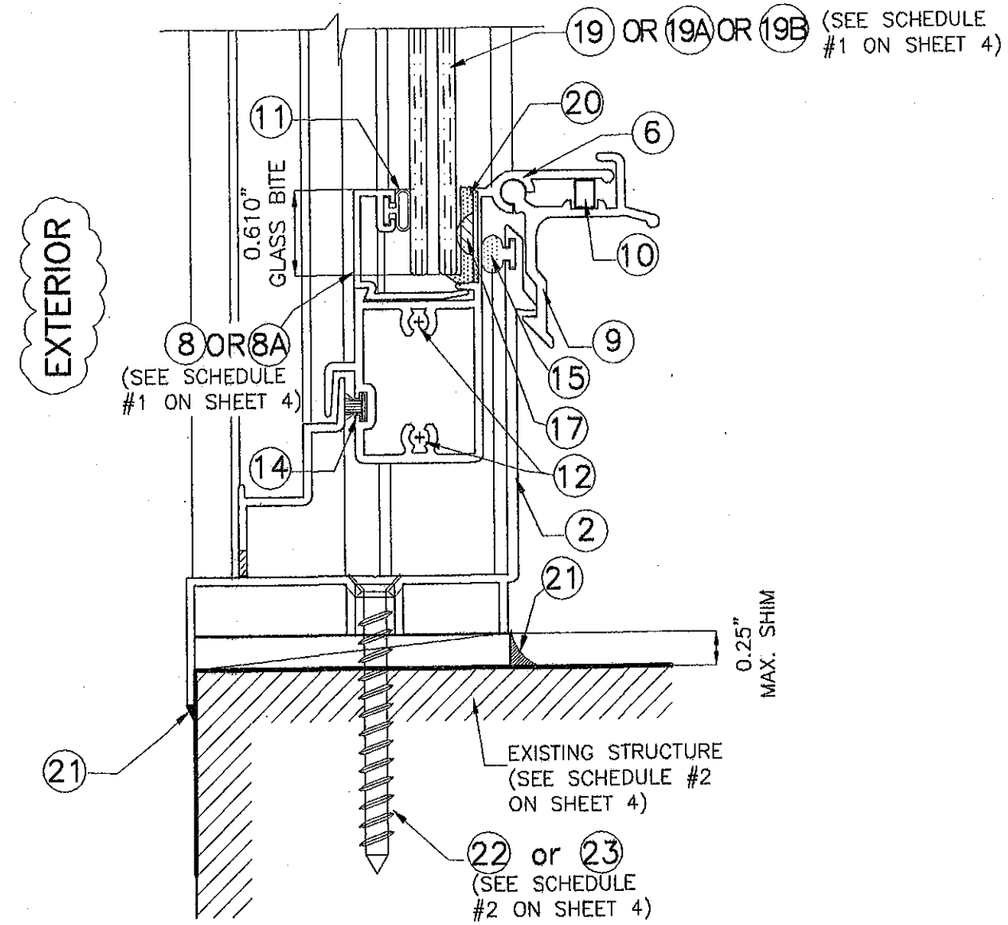

GLAZING DETAIL (SECTION)

SCALE: N.T.S.

FLORIDA BUILDING CODE (High Velocity Hurricane Zone)

PRODUCT REVISED
as complying with the Florida Building Code
Acceptance No 12-0206.06
Expiration Date MAY 27, 2014
By Manuel Perez
Miami Dade Product Control
MIAMI-DADE COUNTY

WALTER A. TILLIT JR. LICENSE No. 44167 STATE OF FLORIDA PROFESSIONAL ENGINEER
P.E. SEAL/SIGNATURE/DATE

© 2012 TILTECO INC.

TILTECO INC.
TILLIT TESTING & ENGINEERING COMPANY
6355 N.W. 36th. St., Ste. 305, VIRGINIA GARDENS, Fl 33166
Phone : (305)871-1530 . Fax : (305)871-1531
e-mail: tilteco@aol.com
E8-0006719
WALTER A. TILLIT Jr., P.E.
FLORIDA Lic. 44167

SERIES 20000 HIGH IMPACT SINGLE HUNG WINDOW
LARGE MISSILE IMPACT RESISTANT

GENERAL IMPACT GLASS & WINDOWS
The Clear Solution
290 WEST 78 ROAD
HIALEAH, FL. 33014
PHONE: (305) 558-8103
FAX: (305) 558-6665
www.generalimpact.com

REV. NO	DESCRIPTION	DATE	REV. No	DESCRIPTION	DATE
1	OLD 07-307	01/09/12	3		
2			4		

DRAWN BY: L.A./F.P./M.C.V./A.C
01/09/12 DATE
12-005 DRAWING No
SHEET 3 OF 9

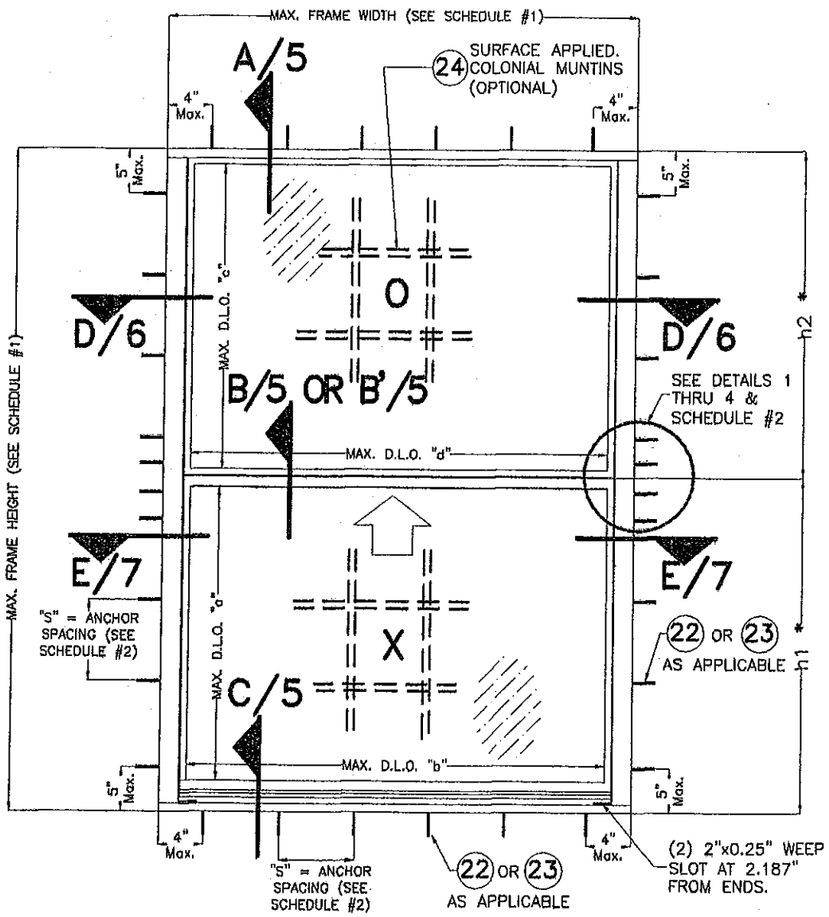

TYPICAL EXTERIOR ELEVATION (OX).

SCALE: N.T.S.

* **NOTE:** h1 AND h2 MAY BE DIFFERENT FROM EACH OTHER BUT THEY SHALL BE SUCH THAT h1 + h2 DOES NOT EXCEED MAXIMUM FRAME HEIGHT INDICATED ON SCHEDULE #1. ADDITIONALLY, DAYLIGHT OPENINGS CREATED BY h1 AND h2 SHALL BE SUCH THAT MAXIMUM DAYLIGHT OPENINGS "a" AND "c" INDICATED ON SCHEDULE #1 ARE NOT EXCEEDED.

SINGLE HUNG WINDOW SCHEDULE #1

WINDOW CASE #	MAXIMUM A.S.D. DESIGN PRESSURE RATING	MAXIMUM WATER PRESSURE	MAXIMUM FRAME WIDTH	MAXIMUM FRAME HEIGHT	MAXIMUM D.L.O. "a"	MAXIMUM D.L.O. "b"	MAXIMUM D.L.O. "c"	MAXIMUM D.L.O. "d"	REQUIRED GLAZING BEAD	REQUIRED GLASS TYPE (SEE BILL OF MATERIALS)	REQUIRED MEETING RAIL
I	+80.0, −80.0 psf	12.0 psf	53 1/8"	74 1/4"	33 1/4"	47 3/8"	33 5/8"	47 1/4"	8	19	4 + 5
II	+90.0, −90.0 psf	13.5 psf	53 1/8"	74 1/4"	33 1/4"	47 3/8"	33 5/8"	47 1/4"	8A	19A	4 + 4I + 5A + 5AI
III	+100.0, −100.0 psf	15.0 psf	44"	74 1/4"	33 1/4"	38 1/8"	33 5/8"	38"	8A	19A	4 + 4I + 5A + 5AI
IV	+120.0, −150.0 psf	18.0 psf	53 1/8"	74 1/4"	33 1/4"	47 3/8"	33 3/8"	47 1/4"	8A	19B	4 + 4I + 5A + 5AI

MAXIMUM ANCHOR SPACING SCHEDULE #2

SUBSTRATE	ANCHOR TYPE	A.S.D. DESIGN PRESSURE RATING (psf)	HEAD/ SILL	JAMBS	REQUIRED ADDITIONAL CONCENTRATION OF ANCHORS @ MEETING RAIL
CONCRETE	1/4"ø ITW/ BUILDEX TAPCON ANCHOR 22	80 OR LESS	13" o.c.	13" o.c.	SEE DETAIL 2 (3 ANCHORS)
		>80 TO 100	10 1/2" o.c.	10 1/2" o.c.	SEE DETAIL 3 (4 ANCHORS)
		>100 TO 150	7" o.c.	7" o.c.	SEE DETAIL 4 (5 ANCHORS)
BLOCK	1/4"ø ITW/ BUILDEX TAPCON ANCHOR 22	80 OR LESS	13" o.c.	13" o.c.	SEE DETAIL 2 (3 ANCHORS)
		>80 TO 100	10 1/2" o.c.	10 1/2" o.c.	SEE DETAIL 3 (4 ANCHORS)
		>100 TO 150	7" o.c.	7" o.c.	SEE DETAIL 4 (5 ANCHORS)
WOOD	1/4"ø−14 ITW/ BUILDEX TEK SCREW 23	80 OR LESS	15 1/2" o.c.	13" o.c.	SEE DETAIL 2 (3 ANCHORS)
		>80 TO 100	12 1/2" o.c.	12 1/2" o.c.	SEE DETAIL 2 (3 ANCHORS)
		>100 TO 150	8 1/2" o.c.	8 1/2" o.c.	SEE DETAIL 4 (5 ANCHORS)
ALUMINUM TUBE OR STEEL MEMBER	1/4"ø−14 ITW/ BUILDEX TEK SCREW 23	80 OR LESS	18 1/2" o.c.	13" o.c.	SEE DETAIL 1 (2 ANCHORS)
		>80 TO 100	14 1/2" o.c.	13" o.c.	SEE DETAIL 2 (3 ANCHORS)
		>100 TO 150	9 1/2" o.c.	9 1/2" o.c.	SEE DETAIL 3 (4 ANCHORS)

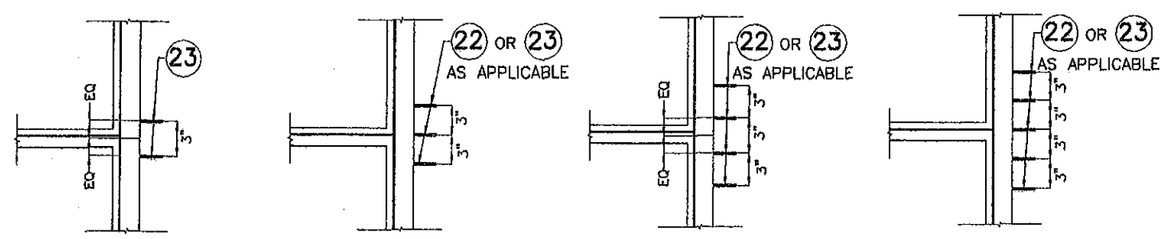

DETAIL 1
2 ANCHORS

DETAIL 2
3 ANCHORS

DETAIL 3
4 ANCHORS

DETAIL 4
5 ANCHORS

REQUIREMENTS FOR ANCHORS CONCENTRATION AT ENDS OF MEETING RAILS

SCALE: N.T.S.

FLORIDA BUILDING CODE (High Velocity Hurricane Zone)

PRODUCT REVISED
as complying with the Florida Building Code
Acceptance No 12-0206.06
Expiration Date May 27, 2014
By Miami Dade Product Control
MIAMI-DADE COUNTY

WALTER A. TILLIT JR. LICENSE No. 44167 STATE OF FLORIDA PROFESSIONAL ENGINEER
P.E. SEAL, SIGNATURE/DATE

©2012 TILTECO INC.

TILTECO INC.
TILLIT TESTING & ENGINEERING COMPANY
6355 N.W. 36th. St., Ste. 305, VIRGINIA GARDENS, Fl 33166
Phone : (305)871-1530 . Fax : (305)871-1531
e-mail: tilteco@aol.com
EB-0006719
WALTER A. TILLIT Jr., P.E.
FLORIDA Lic. 44167

SERIES 20000 HIGH IMPACT SINGLE HUNG WINDOW
LARGE MISSILE IMPACT RESISTANT

GENERAL IMPACT GLASS & WINDOWS
The Clear Solution
290 WEST 78 ROAD
HIALEAH, FL. 33014
PHONE: (305) 558-8103
FAX: (305) 558-6665
www.generalimpact.com

REV. NO	DESCRIPTION	DATE	REV. No	DESCRIPTION	DATE
1	OLD 07-307	01/09/12	3		
2			4		

DRAWN BY: I.A./F.P./M.C.V./A.G
01/09/12
DATE
12-005
DRAWING No
SHEET 4 OF 9

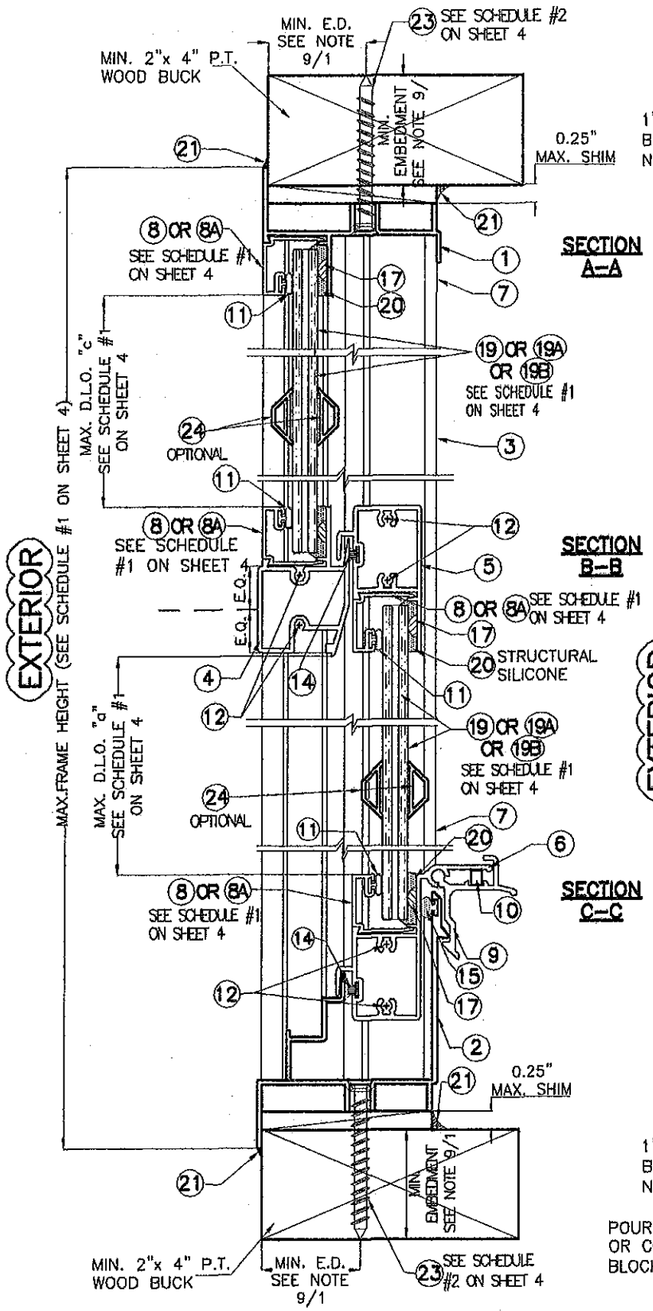

INSTALLATION INTO WOOD

SCALE: 3/4"=1"

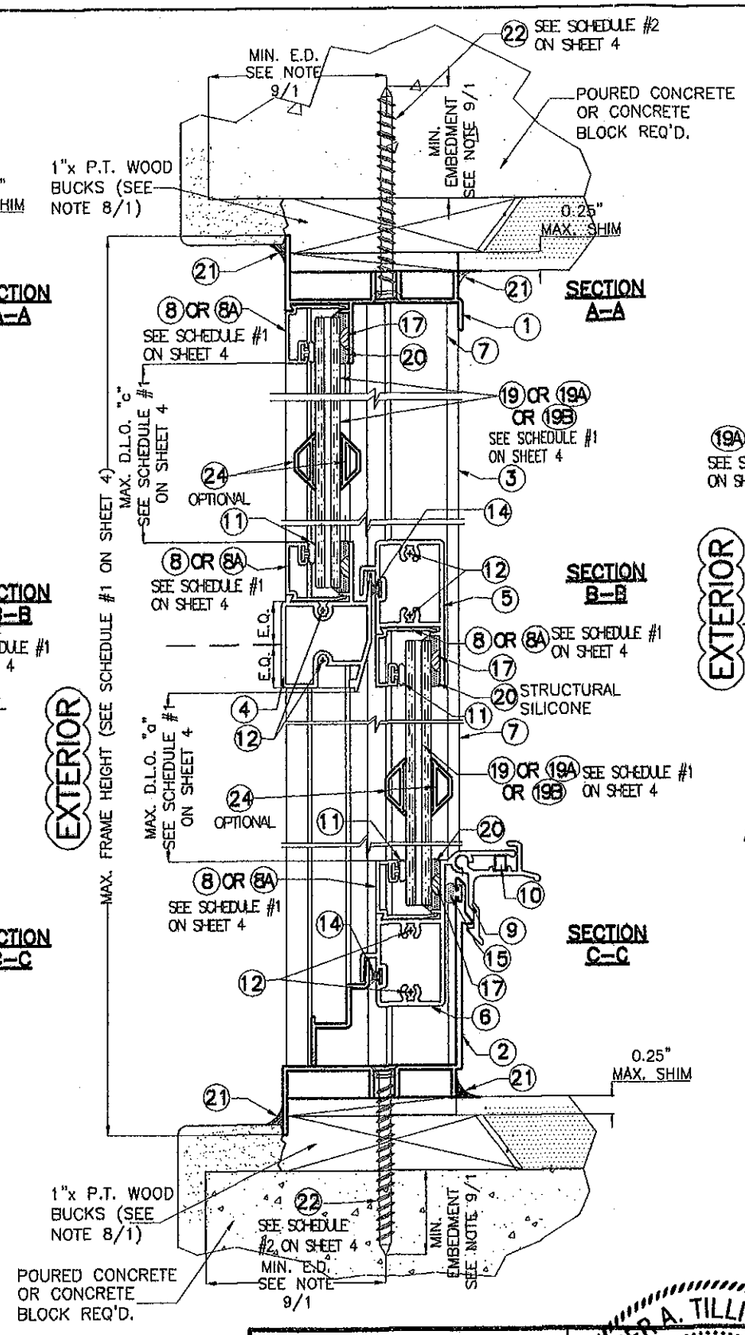

INSTALLATION INTO POURED CONCRETE OR CONCRETE BLOCK

SCALE: 3/4"=1"

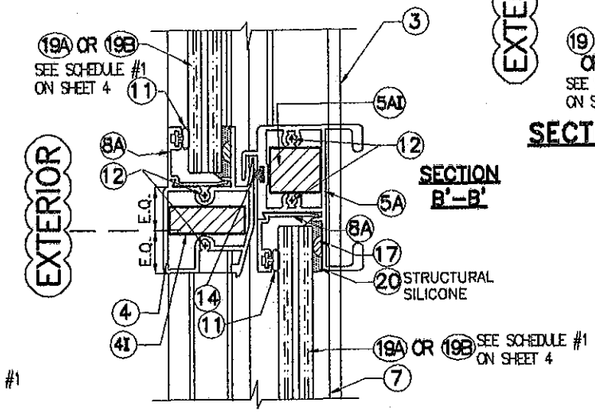

AT MEETING RAILS (4) & (5A) W/ (4I) & (5AI) REINFORCEMENTS

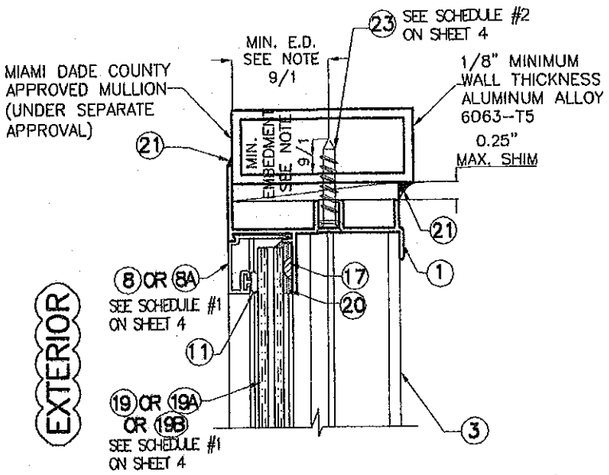

SECTION A-A (SECTION C-C sim.)

INSTALLATION INTO ALUMINUM MULLION

SCALE: 3/8"=1"

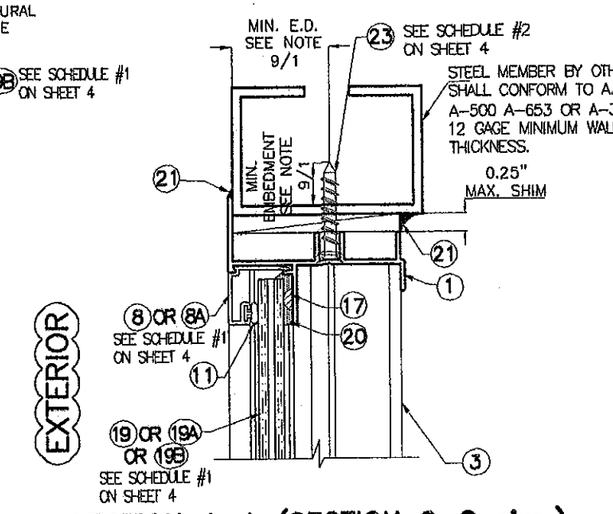

SECTION A-A (SECTION C-C sim.)

INSTALLATION INTO STEEL MEMBER

SCALE: 3/8"=1"

FLORIDA BUILDING CODE (High Velocity Hurricane Zone)

PRODUCT REVISED
as complying with the Florida Building Code
Acceptance No 12-0206.06
Expiration Date MAY 27, 2014
By Manuel Cruz
Miami-Dade Product Control
MIAMI-DADE COUNTY

WALTER A. TILLIT JR. LICENSE No. 44167 STATE OF FLORIDA PROFESSIONAL ENGINEER
SEAL/SIGNATURE/DATE

© 2012 TILTECO INC.

TILTECO INC.
TILLIT TESTING & ENGINEERING COMPANY
6355 N.W. 36th. St., Ste. 305, VIRGINIA GARDENS, Fl 33166
Phone : (305)871-1630 , Fax : (305)871-1531
e-mail: tilteco@aol.com
EB-0006719
WALTER A. TILLIT Jr., P.E.
FLORIDA Lic. 44167

SERIES 20000 HIGH IMPACT SINGLE HUNG WINDOW
LARGE MISSILE IMPACT RESISTANT

GENERAL IMPACT GLASS & WINDOWS
The Clear Solution
290 WEST 78 ROAD
HIALEAH, FL. 33014
PHONE: (305) 558-8103
FAX: (305) 558-6665
www.generalimpact.com

REV. NO	DESCRIPTION	DATE	REV. No	DESCRIPTION	DATE
1	OLD 07-307	01/09/12	3		
2			4		

DRAWN BY: I.A./F.P./M.C.V./A.G
01/09/12 DATE
12-005 DRAWING No
SHEET 5 OF 9

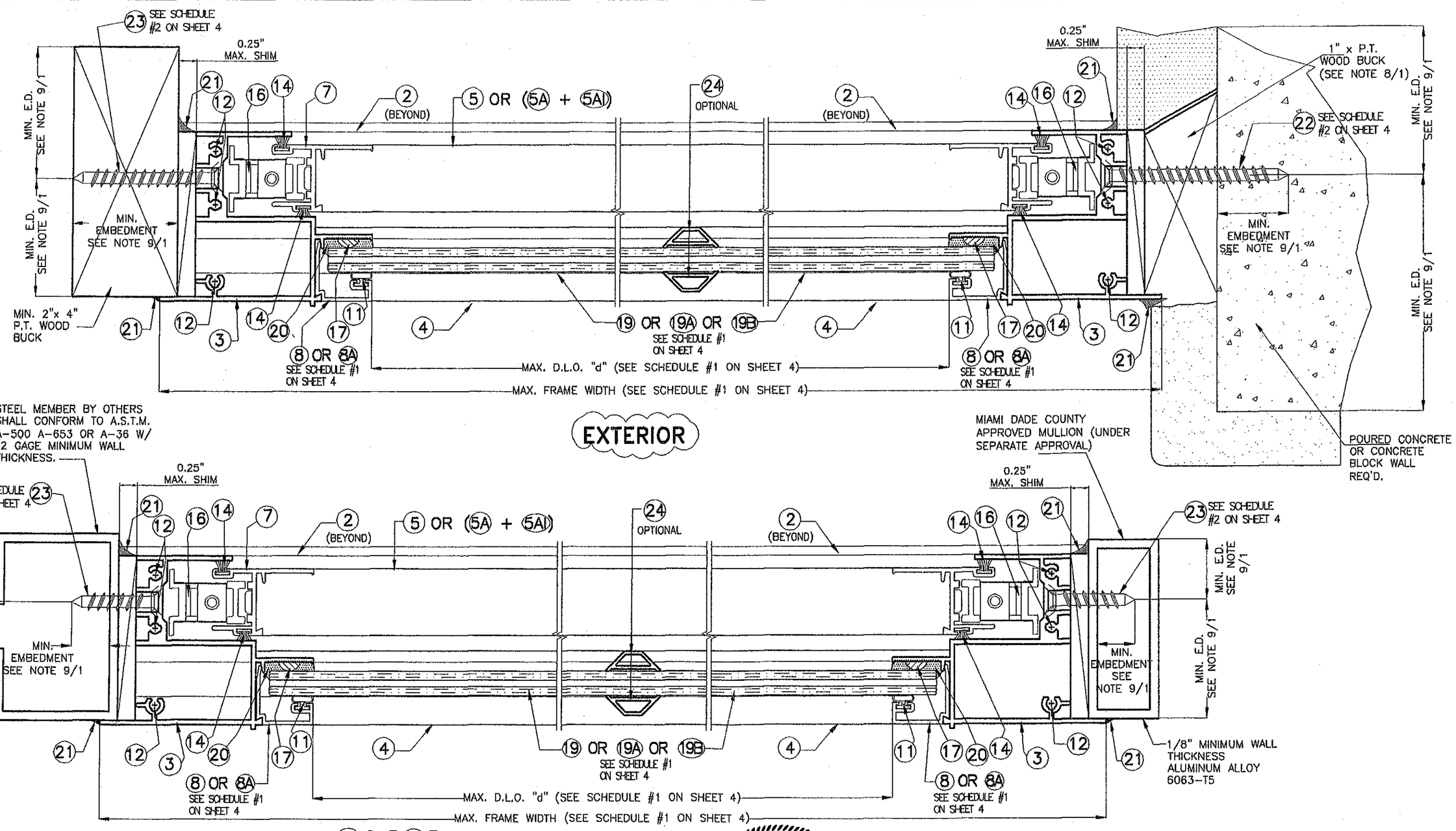

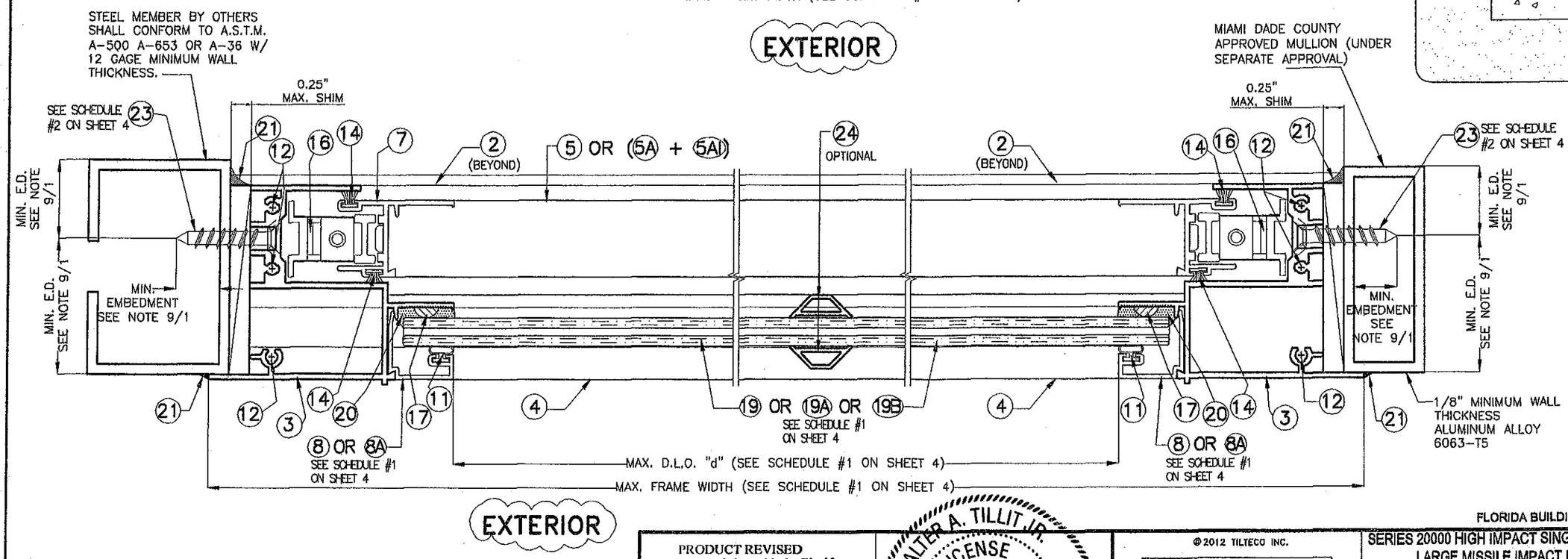

SECTIONS D-D
INSTALLATIONS INTO WOOD, POURED CONCRETE, CONCRETE BLOCK OR METAL.

SCALE 1/2" = 1"

FLORIDA BUILDING CODE (High Velocity Hurricane Zone)

PRODUCT REVISED
as complying with the Florida Building Code
Acceptance No 12-0206.06
Expiration Date MAY 27, 2014
By Manuel Perez
Miami Dade Product Control
MIAMI-DADE COUNTY

WALTER A. TILLIT, JR. LICENSE No. 44167 STATE OF FLORIDA PROFESSIONAL ENGINEER
PE SEAL/SIGNATURE/DATE

©2012 TILTECO INC.

TILTECO INC.
TILLIT TESTING & ENGINEERING COMPANY
6355 N.W. 36th. St., Ste. 305, VIRGINIA GARDENS, Fl 33166
Phone : (305)871-1530 . Fax : (305)871-1531
e-mail: tilteco@aol.com
EB-0006719
WALTER A. TILLIT Jr., P.E.
FLORIDA Lic. 44167

SERIES 20000 HIGH IMPACT SINGLE HUNG WINDOW
LARGE MISSILE IMPACT RESISTANT

GENERAL IMPACT GLASS & WINDOWS
The Clear Solution
290 WEST 78 ROAD
HIALEAH, FL. 33014
PHONE: (305) 558-8103
FAX: (305) 558-6665
www.generalimpact.com

REV. NO	DESCRIPTION	DATE	REV. No	DESCRIPTION	DATE
1	OLD 07-307	01/09/12	3		
2			4		

DRAWN BY: I.A./F.P./M.C.V./A.G
01/09/12 DATE
12-005 DRAWING No
SHEET 6 OF 9

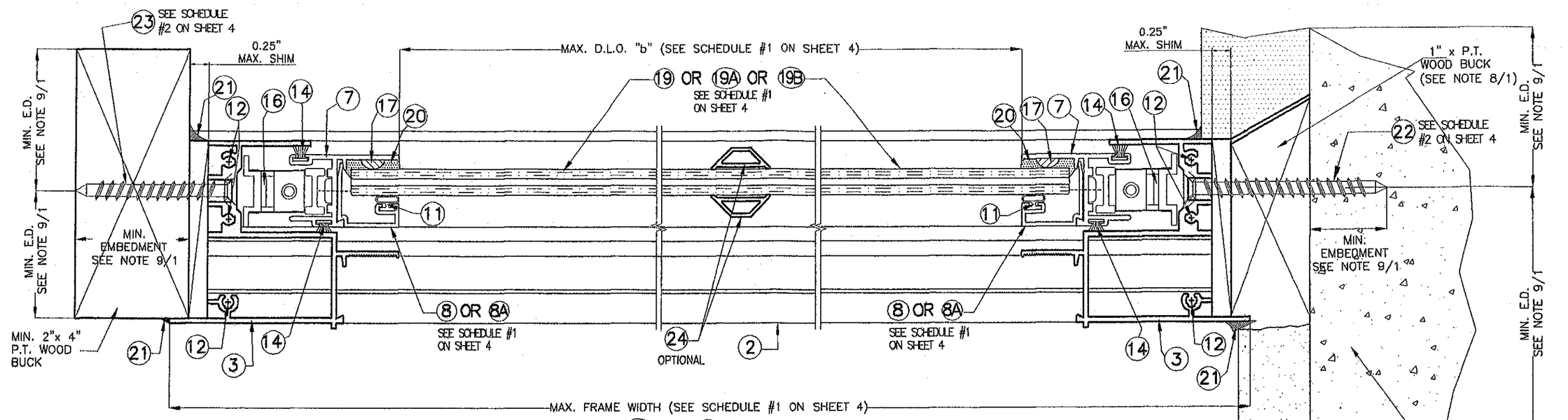

EXTERIOR

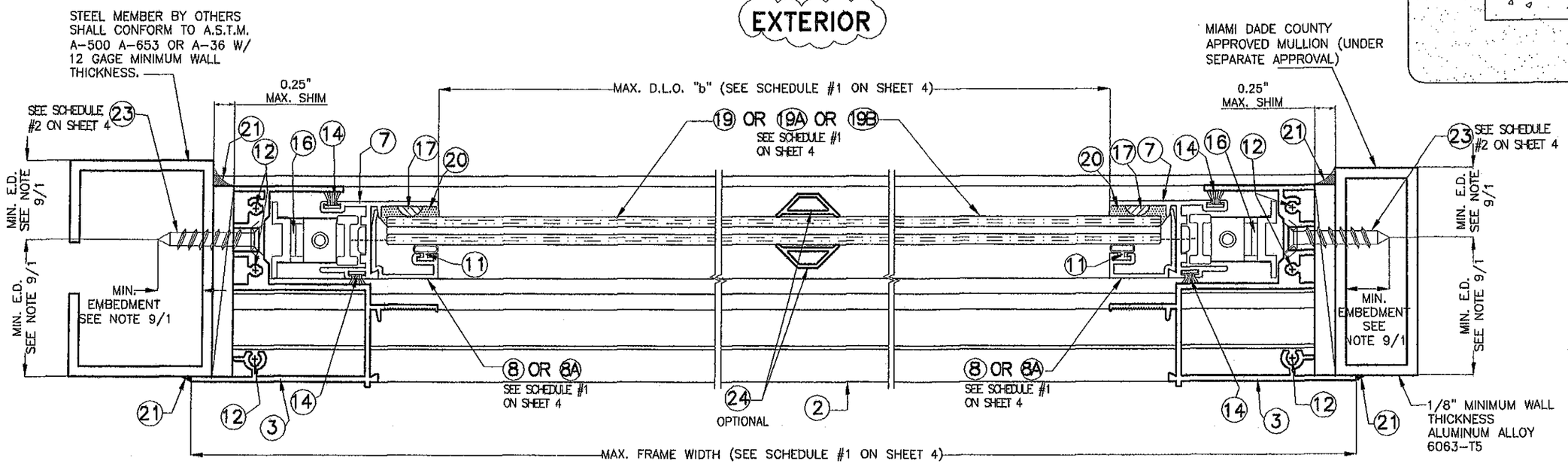

EXTERIOR

SECTIONS E-E
INSTALLATIONS INTO WOOD, POURED CONCRETE, CONCRETE BLOCK OR METAL.

SCALE 1/2" = 1"

FLORIDA BUILDING CODE (High Velocity Hurricane Zone)

PRODUCT REVISED
as complying with the Florida Building Code
Acceptance No 12-0206.06
Expiration Date May 27, 2014
By Manuel Suarez
Miami Dade Product Control
MIAMI-DADE COUNTY

WALTER A. TILLIT JR. LICENSE NO. 44167 STATE OF FLORIDA PROFESSIONAL ENGINEER
SEAL/SIGNATURE/DATE

© 2012 TILTECO INC.

TILTECO INC.
TILLIT TESTING & ENGINEERING COMPANY
6355 N.W. 36th. St., Ste. 305, VIRGINIA GARDENS, Fl 33166
Phone : (305)871-1530 Fax : (305)871-1531
e-mail: tilteco@aol.com
EB-0006719
WALTER A. TILLIT Jr., P.E.
FLORIDA Lic. 44167

SERIES 20000 HIGH IMPACT SINGLE HUNG WINDOW
LARGE MISSILE IMPACT RESISTANT

GENERAL IMPACT GLASS & WINDOWS
The Clear Solution
290 WEST 78 ROAD
HIALEAH, FL. 33014
PHONE: (305) 558-8103
FAX: (305) 558-6665
www.generalimpact.com

REV. NO	DESCRIPTION	DATE	REV. No	DESCRIPTION	DATE
1	OLD 07-507	01/09/12	3		
2			4		

DRAWN BY: I.A./F.P./M.C.V./A.C
01/09/12 DATE
12-005 DRAWING No
SHEET 7 OF 9

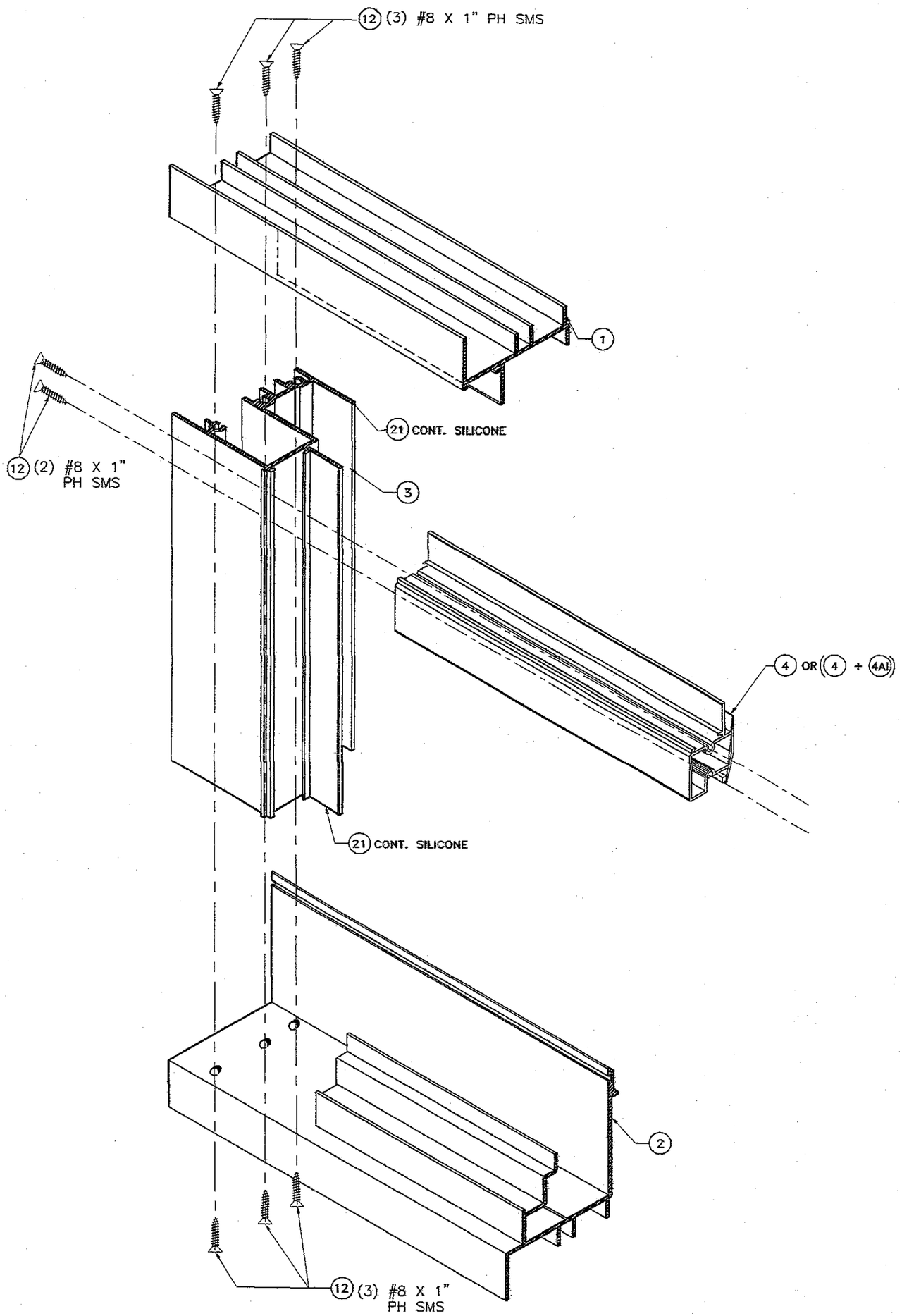

CORNER CONNECTION AT FRAME HEAD AND SILL

SCALE 1/2" = 1"

FLORIDA BUILDING CODE (High Velocity Hurricane Zone)

PRODUCT REVISED
as complying with the Florida Building Code
Acceptance No 12-0206.06
Expiration Date MAY 27, 2014
By Manuel Perez
Miami-Dade Product Control

MIAMI-DADE COUNTY

WALTER A. TILLIT JR. LICENSE No 44167 STATE OF FLORIDA PROFESSIONAL ENGINEER

P.E. SEAL/SIGNATURE/DATE

©2012 TILTECO INC.

TILTECO INC.
TILLIT TESTING & ENGINEERING COMPANY
8355 N.W. 36th. St. Ste. 305, VIRGINIA GARDENS, Fl 33166
Phone : (305)871-1530 . Fax : (305)871-1531
e-mail: tilteco@aol.com
EB-0006719
WALTER A. TILLIT Jr., P.E.
FLORIDA Lic. 44167

SERIES 20000 HIGH IMPACT SINGLE HUNG WINDOW
LARGE MISSILE IMPACT RESISTANT

GENERAL IMPACT GLASS & WINDOWS
The Clear Solution

290 WEST 78 ROAD
HIALEAH, FL 33014
PHONE: (305) 558-8103
FAX: (305) 558-6665
www.generalimpact.com

REV. NO	DESCRIPTION	DATE	REV. No	DESCRIPTION	DATE
1	OLD 07-307	01/09/12	3		
2			4		

DRAWN BY: L.A./F.P./M.C.V./A.G
01/09/12 DATE
12-005 DRAWING No
SHEET 8 OF 9

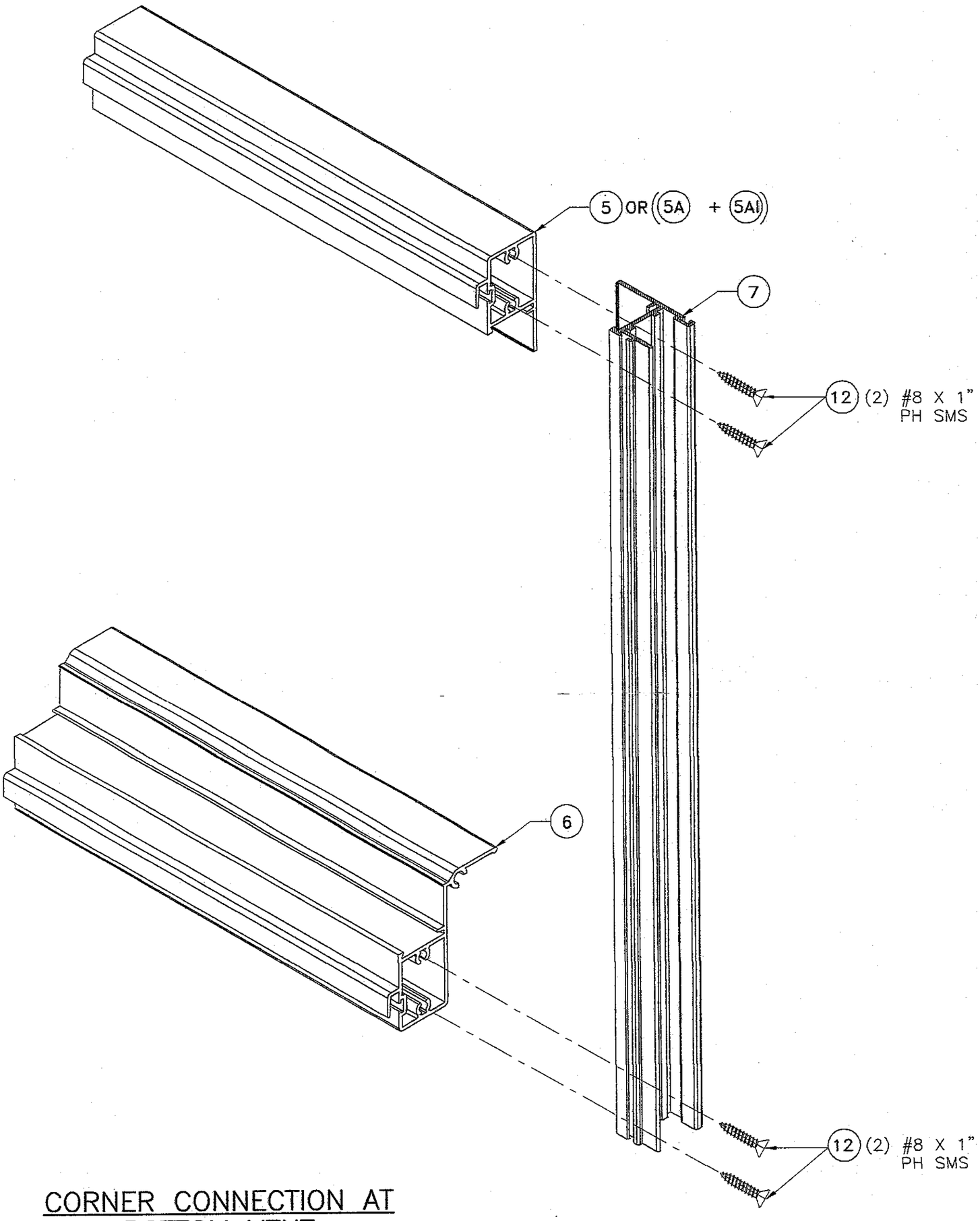

CORNER CONNECTION AT BOTTOM VENT

SCALE 3/4" = 1"

FLORIDA BUILDING CODE (High Velocity Hurricane Zone)

PRODUCT REVISED
as complying with the Florida Building Code
Acceptance No 12-0206.06
Expiration Date May 21, 2014
By Manuel Perez
Miami Dade Product Control
MIAMI-DADE COUNTY

WALTER A. TILLIT, JR. LICENSE No. 44167 STATE OF FLORIDA PROFESSIONAL ENGINEER
SEAL/SIGNATURE/DATE

©2012 TILTECO INC.

TILTECO INC.
TILLIT TESTING & ENGINEERING COMPANY
6355 N.W. 36th. St., Ste. 305, VIRGINIA GARDENS, Fl 33166
Phone : (305)871-1530 . Fax : (305)871-1531
e-mail: tilteco@aol.com
EB-0006719
WALTER A. TILLIT Jr., P.E.
FLORIDA Lic. 44167

SERIES 20000 HIGH IMPACT SINGLE HUNG WINDOW
LARGE MISSILE IMPACT RESISTANT

GENERAL IMPACT GLASS & WINDOWS
The Clear Solution
290 WEST 78 ROAD
HIALEAH, FL. 33014
PHONE: (305) 558-8103
FAX: (305) 558-6665
www.generalimpact.com

REV. NO	DESCRIPTION	DATE	REV. No	DESCRIPTION	DATE
1	OLD 07-307	01/09/12	3		
2			4		

DRAWN BY: A./F.P./M.C.V./A.G
01/09/12
DATE
12-005
DRAWING No
SHEET 9 OF 9