MIAMI-DADE COUNTY
DEPARTMENT OF PERMITTING, ENVIRONMENT, AND REGULATORY AFFAIRS (PERA)
BOARD AND CODE ADMINISTRATION DIVISION

MIAMI-DADE COUNTY
PRODUCT CONTROL SECTION
11805 SW 26 Street, Room 208
Miami, Florida 33175-2474
T (786) 315-2590 F (786) 315-2599
www.miamidade.gov/pera/

NOTICE OF ACCEPTANCE (NOA)

General Impact Glass & Windows, Corp.
290 West 78th Road
Hialeah, FL 33014

SCOPE:

This NOA is being issued under the applicable rules and regulations governing the use of construction materials. The documentation submitted has been reviewed and accepted by Miami-Dade County PERA - Product Control Section to be used in Miami Dade County and other areas where allowed by the Authority Having Jurisdiction (AHJ).

This NOA shall not be valid after the expiration date stated below. The Miami-Dade County Product Control Section (In Miami Dade County) and/or the AHJ (in areas other than Miami Dade County) reserve the right to have this product or material tested for quality assurance purposes. If this product or material fails to perform in the accepted manner, the manufacturer will incur the expense of such testing and the AHJ may immediately revoke, modify, or suspend the use of such product or material within their jurisdiction. PERA reserves the right to revoke this acceptance, if it is determined by Miami-Dade County Product Control Section that this product or material fails to meet the requirements of the applicable building code.

This product is approved as described herein, and has been designed to comply with the Florida Building Code, including the High Velocity Hurricane Zone.

DESCRIPTION: Series "21000 High Impact " Aluminum Fixed Window – L.M.I.

APPROVAL DOCUMENT: Drawing No. **12–004**, titled "Series 21000 High Impact Fixed Laminated Glass Windows", sheets 1 through 9 of 9, dated 01/09/12, with revision #1 dated 01/09/12, prepared by Tilteco, Inc., signed and sealed by Walter A. Tillit, Jr., P.E., bearing the Miami–Dade County Product Control Revision stamp with the Notice of Acceptance number and expiration date by the Miami–Dade County Product Control Section.

MISSILE IMPACT RATING: Large and Small Missile Impact Resistant

LABELING: Each unit shall bear a permanent label with the manufacturer's name or logo, city, state, model/series, and following statement: "Miami-Dade County Product Control Approved", unless otherwise noted herein.

RENEWAL of this NOA shall be considered after a renewal application has been filed and there has been no change in the applicable building code negatively affecting the performance of this product.

TERMINATION of this NOA will occur after the expiration date or if there has been a revision or change in the materials, use, and/or manufacture of the product or process. Misuse of this NOA as an endorsement of any product, for sales, advertising or any other purposes shall automatically terminate this NOA. Failure to comply with any section of this NOA shall be cause for termination and removal of NOA.

ADVERTISEMENT: The NOA number preceded by the words Miami-Dade County, Florida, and followed by the expiration date may be displayed in advertising literature. If any portion of the NOA is displayed, then it shall be done in its entirety.

INSPECTION: A copy of this entire NOA shall be provided to the user by the manufacturer or its distributors and shall be available for inspection at the job site at the request of the Building Official.

This NOA **revises NOA # 10-0104.03** and consists of this page 1 and evidence pages E-1 and E-2, as well as approval document mentioned above.

The submitted documentation was reviewed by **Manuel Perez, P.E.**

MIAMI-DADE COUNTY APPROVED

4/3/12

General Impact Glass & Windows, Corp.

NOTICE OF ACCEPTANCE: EVIDENCE SUBMITTED

A. DRAWINGS

1. Manufacturer's die drawings and sections.
2. Drawing No **12–004**, titled "Series 21000 High Impact Fixed Laminated Glass Windows", sheets 1 through 9 of 9, dated 01/09/12, with revision #1 dated 01/09/12, prepared by Tilteco, Inc., signed and sealed by Walter A. Tillit, Jr., P.E.

B. TESTS

1. Test reports on: 1) Air Infiltration Test, per FBC, TAS 202–94
   2) Uniform Static Air Pressure Test, Loading per FBC TAS 202–94
   3) Water Resistance Test, per FBC, TAS 202–94
   4) Large Missile Impact Test per FBC, TAS 201–94
   5) Cyclic Wind Pressure Loading per FBC, TAS 203–94
   6) Forced Entry Test, per FBC 2411 3.2.1, TAS 202–94

   along with marked–up drawings and installation diagram of a aluminum fixed window, prepared by Fenestration Testing Laboratory, Inc., Test Report No. **FTL–6058**, dated 10/23/09, signed and sealed by Julio E. Gonzalez, P. E. ***(Submitted under previous NOA#10-0104.03)***

C. CALCULATIONS

1. Anchor calculations and structural analysis, complying with FBC–2007, prepared by Tilteco, Inc., dated 11/12/09, signed and sealed by Walter A. Tillit, Jr., P.E. ***(Submitted under previous NOA#10-0104.03)***
2. Glazing complies with ASTM E1300-04

D. QUALITY ASSURANCE

1. Miami-Dade Department of Permitting, Environment, and Regulatory Affairs (PERA).

E. MATERIAL CERTIFICATIONS

1. Notice of Acceptance No. **11–0624.02** issued to **E.I. DuPont DeNemours & Co., Inc.** for their "**DuPont SentryGlas® Interlayer**" dated 08/25/11, expiring on 01/14/17.
2. Notice of Acceptance No. **11–0624.01** issued to **E.I. DuPont DeNemours & Co., Inc.** for their "**DuPont Butacite® PVB Interlayer**" dated 09/08/11, expiring on 12/11/16.

Manuel Perez, P.E.
Product Control Examiner
NOA No. 12-0206.07
Expiration Date: February 17, 2015
Approval Date: April 12, 2012

NOTICE OF ACCEPTANCE: EVIDENCE SUBMITTED

F. STATEMENTS

1. Statement letter of conformance, complying with FBC-2010, dated January 27, 2012, signed and sealed by Walter A. Tillit, Jr., P.E.
2. Statement letter of no financial interest, dated November 3, 2009, signed and sealed by Walter A. Tillit, Jr., P.E.
   (Submitted under previous NOA#10-0104.03)
3. Laboratory compliance letter for Test Report No. **FTL–6058**, issued by Fenestration Testing Laboratory, Inc., dated October 23, 2009, signed and sealed by Julio E. Gonzalez, P. E.
   (Submitted under previous NOA#10-0104.03)

G. OTHER

1. Notice of Acceptance No. **10-0104.03**, issued to General Impact Glass & Windows, Corp. for their Series "21000 High Impact Laminated Glass" Aluminum Fixed Window – L.M.I., approved on 02/17/10 and expiring on 02/17/15.

Manuel Perez, P.E.
Product Control Examiner
NOA No. 12-0206.07
Expiration Date: February 17, 2015
Approval Date: April 12, 2012

GENERAL NOTES:

1. SERIES 21000 HIGH IMPACT FIXED LAMINATED GLASS WINDOWS, SHOWN ON THIS PRODUCT APPROVAL DOCUMENT (P.A.D.) HAVE BEEN VERIFIED FOR COMPLIANCE IN ACCORDANCE WITH THE 2007 & 2010 EDITIONS OF THE FLORIDA BUILDING CODE. THESE WINDOWS MAY BE INSTALLED AT HIGH VELOCITY HURRICANE ZONES (MIAMI-DADE/BROWARD COUNTIES).
DESIGN WIND LOADS SHALL BE DETERMINED AS PER SECTIONS **1620** OF THE ABOVE MENTIONED CODES, USING ASCE 7-05 STANDARD FOR INSTALLATIONS UNDER 2007 FBC & ASCE 7-10 FOR INSTALLATIONS UNDER 2010 FBC AND SHALL NOT EXCEED THE MAXIMUM (A.S.D.) DESIGN PRESSURE RATINGS INDICATED ON NOTE 2 BELOW.
IN ORDER TO VERIFY THE ABOVE CONDITION, ULTIMATE DESIGN WIND LOADS DETERMINED PER ASCE 7-10 SHALL BE FIRST REDUCED TO A.S.D. DESIGN WIND LOADS BY MULTIPLYING THEM BY 0.6 IN ORDER TO COMPARE THESE W/ MAX. (A.S.D.) DESIGN PRESSURE RATINGS INDICATED ON NOTE 2 BELOW.
IN ORDER TO VERIFY THAT ANCHORS ON THIS P.A.D., AS TESTED, WERE NOT OVERSTRESSED, A 33% INCREASE IN ALLOWABLE STRESS FOR WIND LOADS WAS **NOT** USED IN THEIR ANALYSIS. FASTENERS SPACING IN WOOD HAS BEEN DETERMINED IN ACCORDANCE WITH NDS 2005.
THESE WINDOWS' ADEQUACY FOR IMPACT AND WIND RESISTANCE HAS BEEN VERIFIED IN ACCORDANCE WITH SECTION **1626** OF THE ABOVE MENTIONED CODE AS PER PROTOCOLS TAS-201, TAS-202, & TAS-203, PER FENESTRATION TESTING LAB REPORT # **6058** AND AS PER SUBMITTED STRUCTURAL CALCULATIONS, PERFORMED AS PER SECTIONS **1612** & **1615** OF THE FLORIDA BUILDING CODE, 2007 & 2010 EDITIONS, RESPECTIVELY.

2. **MAXIMUM A.S.D. DESIGN PRESSURE RATINGS SHALL BE AS PER SCHEDULES SHOWN ON SHEETS 6, 7 & 8. CRITERIA FOR ADDRESSING DIFFERENT SHAPES IS AS EXPLAINED ON THIS SHEET (*).**

3. **THESE WINDOWS WILL NOT REQUIRE A HURRICANE PROTECTION DEVICE.**

4. **THESE WINDOWS ARE APPROVED FOR AIR AND WATER INFILTRATION.**

5. THESE WINDOWS COMPLY WITH SECTIONS 2406.1, 2411.4.1 AND 2411.4.2 OF THE FLORIDA BUILDING CODE.

6. ALL ALUMINUM EXTRUSIONS SHALL BE ALUMINUM ASSOCIATION 6063-T6 ALLOY AND TEMPER. THE THICKNESS OF ALL EXTRUSIONS SHALL BE AS SHOWN ON SHEET 2 OF THIS DRAWING.

7. ALL SCREWS USED FOR ASSEMBLY CONNECTIONS (METAL TO METAL) TO BE STAINLESS STEEL 304 OR 316 AISI SERIES OR CORROSION RESISTANT COATED CARBON STEEL AS PER DIN 50018 AND SECTION 2411.3.3.4 OF THE FLORIDA BUILDING CODE WITH 50 ksi YIELD STRENGTH AND 90 ksi TENSILE STRENGTH.

8. WOOD BUCKS NOT BY GENERAL IMPACT GLASS & WINDOWS, CORP. WOOD BUCKS MUST BE SOUTHERN PINE WITH G=0.55. AND SHALL COMPLY WITH SECTIONS 2411.3.3.3 AND 2326 OF THE 2007 & 2010 EDITIONS OF THE FLORIDA BUIDING CODE. MUST SUSTAIN LOADS IMPOSED BY GLAZING SYSTEM AND TRANSFER THEM TO THE BUILDING STRUCTURE.

9. **ANCHOR NOTES: SEE SHEET 9 FOR MAXIMUM SPACING, EMBEDMENT AND EDGE DISTANCE ARE BEYOND ANY WALL FINISH.**
   (A) TO EXISTING POURED CONCRETE: (Min. f'c = 2730 psi,). MIN. EDGE DISTANCE = 2 1/2".
   - 1/4"Ø ULTRACON 1 1/4" MIN. EMBEDMENT, AS MANUFACTURED BY ELCO CONSTRUCTION PRODUCTS. (COMPONENT (8)), THRU 1" P.T. WOOD BUCK.

   (B) TO EXISTING HOLLOW BLOCK WALL (Min. f'm = 1924 psi,). MIN. EDGE DISTANCE = 2 1/2".
   - 1/4"Ø ULTRACON 1 1/4" MIN. EMBEDMENT, AS MANUFACTURED BY ELCO CONSTRUCTION PRODUCTS. (COMPONENT (8)), THRU 1" P.T. WOOD BUCK.

   (C) TO EXISTING 2x P.T. WOOD BUCK. (MIN. G = 0.55) MIN. EDGE DISTANCE = 1".
   - 1/4"Ø ULTRACON 1 1/2" MIN. THREADED PENETRATION, AS MANUFACTURED BY ELCO CONSTRUCTION PRODUCTS. (COMPONENT (8)).

   (D) TO EXISTING MIN. 1/8" THICK ALUMINUM TUBE (6063-T5 ALLOY) MIN. EDGE DISTANCE = 1/2".
   - 1/4"Ø-14 TEK SCREW, MIN. 3/4" LONG, AS MANUFACTURED BY ITW BUILDEX, INC. (COMPONENT (8A)).

   (E) TO EXISTING MIN. 12 GAGE (0.106") STEEL MEMBER (ASTM A-500, A-653 OR A-36) MIN. EDGE DISTANCE = 3/8".
   - 1/4"Ø-14 TEK SCREW, MIN. 3/4" LONG, AS MANUFACTURED BY ITW BUILDEX, INC. (COMPONENT (8A)).

10. PROVIDE 1/4" MAX. LOAD BEARING SHIM SPACE (TYP.).

11. REMAINING COMPONENTS FOR THESE WINDOWS SHALL BE AS INDICATED ON BILL OF MATERIALS ON SHEET 2.

12. WINDOWS' MANUFACTURER LABEL SHALL BE PLACED ON A READILY VISIBLE LOCATION.
ONE LABEL SHALL BE PLACED FOR EVERY UNIT. LABEL SHALL READ AS FOLLOWS:
GENERAL IMPACT GLASS AND WINDOWS, CORP.
HIALEAH, FLORIDA
MIAMI-DADE COUNTY PRODUCT CONTROL APPROVED.

13. (A) THIS P.A.D. PREPARED BY THIS ENGINEER IS GENERIC AND DOES NOT PROVIDE INFORMATION FOR A SITE SPECIFIC PROJECT; I.E. WHERE THE SITE CONDITIONS DEVIATE FROM THE P.A.D.
(B) CONTRACTOR TO BE RESPONSIBLE FOR THE SELECTION, PURCHASE AND INSTALLATION INCLUDING LIFE SAFETY OF THIS PRODUCT, BASED ON THIS P.A.D., PROVIDED HE/SHE DOES NOT DEVIATE FROM THE CONDITIONS DETAILED ON THIS DOCUMENT. CONSTRUCTION SAFETY AT SITE IS THE CONTRACTOR'S RESPONSIBILITY.
(C) THIS P.A.D. WILL BE CONSIDERED INVALID IF ALTERED BY ANY MEANS.
(D) SITE SPECIFIC PROJECTS SHALL BE PREPARED BY A FLORIDA REGISTERED ENGINEER OR ARCHITECT WHICH WILL BECOME THE ENGINEER OF RECORD (E.O.R.) FOR THE PROJECT AND WHO WILL BE RESPONSIBLE FOR THE PROPER USE OF THE P.A.D. ENGINEER OF RECORD, ACTING AS DELEGATED ENGINEER TO THE P.A.D., SHALL SUBMIT TO THIS LATTER SITE SPECIFIC DRAWING FOR REVIEW.
(E) ORIGINAL P.A.D. SHALL BEAR THE DATE AND ORIGINAL SEAL AND SIGNATURE OF THE PROFESSIONAL ENGINEER OF RECORD THAT PREPARED IT.

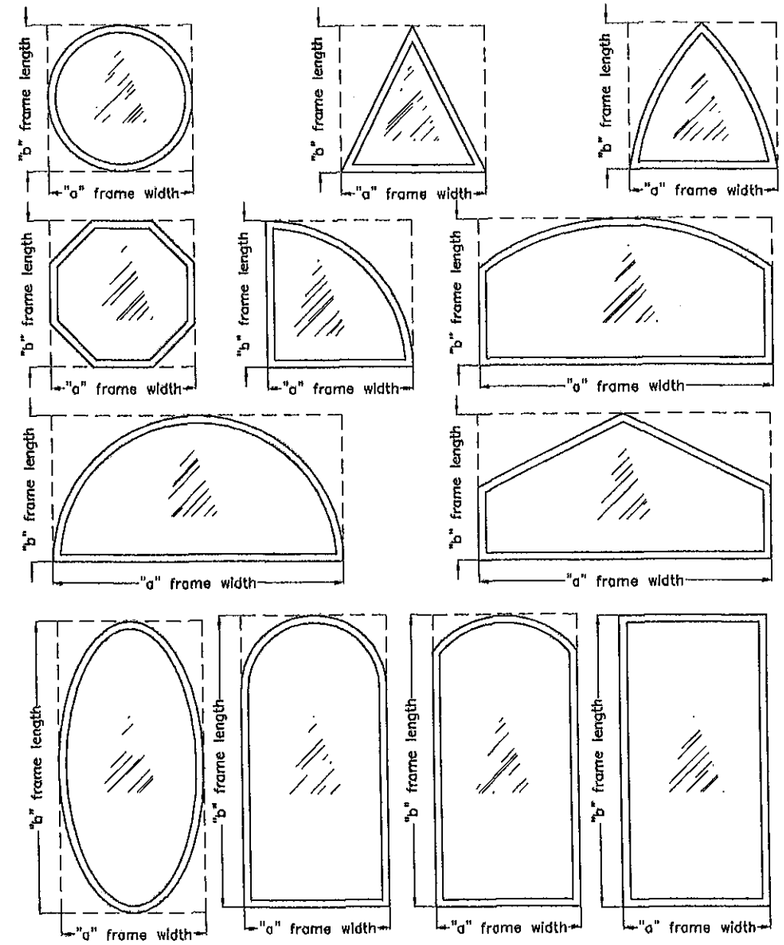

* MAXIMUM A.S.D. DESIGN PRESSURE RATING (psf) FOR ALTERNATE SHAPES AS SHOWN ABOVE OR SIMILAR CAN BE DETERMINED BY INSCRIBING FIXED WINDOW SHAPE WITHIN SQUARE "a" x "b" OR RECTANGLE "a" x "b" AS SHOWN IN DOTTED LINES AND OBTAINING MAXIMUM A.S.D. DESIGN PRESSURE RATING (psf) FOR THOSE ALTERNATE SHAPES FROM SCHEDULES ON SHEETS **6, 7 & 8 FOR SERIES 21000 HIGH IMPACT FIXED LAMINATED GLASS WINDOWS.**

FLORIDA BUILDING CODE (High Velocity Hurricane Zone)

PRODUCT REVISED
as complying with the Florida Building Code
Acceptance No 12-0206.07
Expiration Date FEB. 17 2015
By Manuel Perez
Miami Dade Product Control

MIAMI-DADE COUNTY

WALTER A. TILLIT JR. LICENSE No. 44167 STATE OF FLORIDA PROFESSIONAL ENGINEER

P.E. SEAL / SIGNATURE / DATE

©2012 TILTECO INC.

TILTECO INC.
TILLIT TESTING & ENGINEERING COMPANY
6355 N.W. 36th. St., Ste. 305, VIRGINIA GARDENS, Fl 33166
Phone : (305)871-1530 . Fax : (305)871-1531
e-mail: tilteco@aol.com
E8-0006719
WALTER A. TILLIT Jr., P.E.
FLORIDA Lic. 44167

SERIES 21000 HIGH IMPACT FIXED LAMINATED GLASS WINDOWS

GENERAL IMPACT GLASS & WINDOWS
290 WEST 78 ROAD
HIALEAH, FL. 33014
PHONE: (305) 556-8103
FAX: (305) 556-6665
www.generalimpact.com

REV. NO	DESCRIPTION	DATE	REV. No	DESCRIPTION	DATE
1	OLD 09-101	01/09/12	3		
2			4		

DRAWN BY: I.A./R.E./A.G
01/09/12 DATE
12-004 DRAWING No
SHEET 1 OF 9

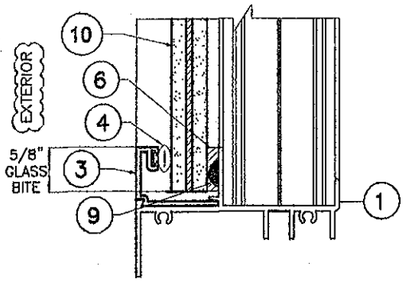

GLAZING DETAIL FOR

(10) W/ (3)

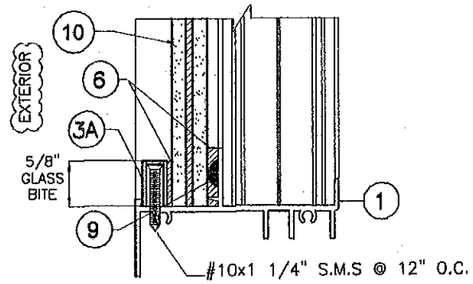

GLAZING DETAIL FOR

(10) W/ (3A)

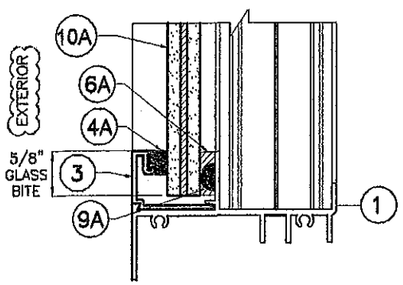

GLAZING DETAIL FOR

(10A) W/ (3)

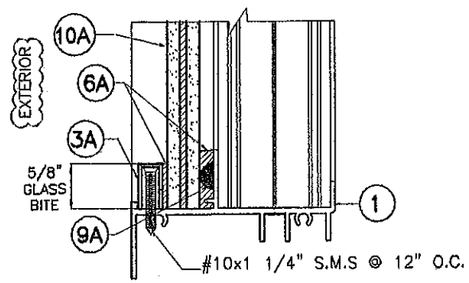

GLAZING DETAIL FOR

(10A) W/ (3A)

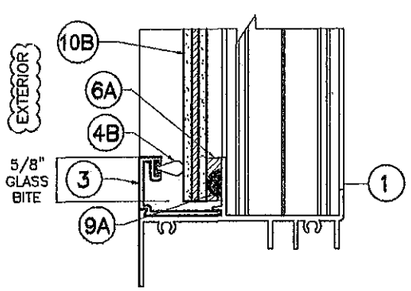

GLAZING DETAIL FOR

(10B) W/ (3)

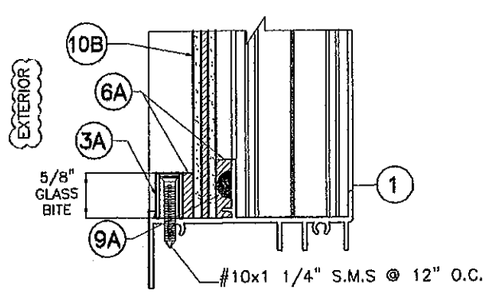

GLAZING DETAIL FOR

(10B) W/ (3A)

GLAZING DETAILS

SCALE 1/2" = 1"

BILL OF MATERIALS

ITEM #	DESCRIPTION	DIMENSIONS & REMARKS	MATERIAL
1	FRAME HEAD/SILL	(2) REQUIRED	6063-T6
2	FRAME JAMB	(2) REQUIRED	6063-T6
3	GLAZING BEAD FOR FULLY STRAIGHT FRAME WINDOWS	(4) REQUIRED	6063-T6
3A	GLAZING BEAD FOR CURVED AND COMBINATION CURVED/STRAIGHT FRAME WINDOWS	(4) REQUIRED	6063-T6
4	WEATHER STRIPING, ULTRAFAB E-271	(4) AT GLAZING BEAD	NEOPRENE
4A	WEATHER STRIPING SOLID RUBBER	(4) AT GLAZING BEAD	NEOPRENE
4B	WEATHER STRIPING 0.296" HEIGHT, SCHLEGEL SYSTEM, INC., Q375T190	(4) AT GLAZING BEAD	NEOPRENE
5	CORNER FRAME ASSEMBLY SCREWS	(2) #8 x 1" PH SMS REQ'D.	STEEL
6	DOW CORNING 995	------	STRUCTURAL SILICONE
6A	DOW CORNING 795	------	STRUCTURAL SILICONE
7	WHITE COLOR SILICONE AT FIXED PANEL FRAME AND FRAME CORNERS.	ALL AROUND (EXTERIOR)	SEALANT
8	1/4"ø ULTRACON BY ELCO CONSTRUCTION PRODUCTS, TO POURED CONCRETE, HOLLOW BLOCK OR WOOD WALL REQ'D. (SEE SCHEDULE)	------	CARBON STEEL
8A	1/4"ø ITW BUILDEX TEK SCREW TO METAL (SEE SCHEDULE)	------	STEEL
9	0.145" HEIGHT BUMPER SPACER, CUT FROM 3/8"ø SPHERE, CLEAR 3" FROM CORNERS MAX. AND 12" O.C. (MAX.) AT MID-GLASS BITE ELEVATION	FRANK LOWE RUBBEL, GASKET TLB-28, CLEAR.	SILICONE
9A	0.211" HEIGHT BUMPER SPACER, CUT FROM 3/8"ø SPHERE, CLEAR 3" FROM CORNERS MAX. AND 12" O.C. (MAX.) AT MID-GLASS BITE ELEVATION	FRANK LOWE RUBBEL, GASKET FLB-38, CLEAR.	SILICONE
10	0.590" (9/16" NOMINAL) LAMINATED GLASS W/ 1/4" H.S. GLASS + 0.090" SENTRYGLAS® INTERLAYER + 1/4" H.S. GLASS	INTERLAYER BY: E.I. DUPONT DE NEMOURS & Co., INC.	GLASS
10A	0.484" (7/16" NOMINAL) LAMINATED GLASS W/ 3/16" H.S. GLASS + 0.090" BUTACITE® PVB. INTERLAYER + 3/16" H.S. GLASS	INTERLAYER BY: E.I. DUPONT DE NEMOURS & Co., INC.	GLASS
10B	0.326" (5/16" NOMINAL) LAMINATED GLASS W/ 1/8" H.S. GLASS + 0.090" BUTACITE® PVB. INTERLAYER + 1/8" H.S. GLASS	INTERLAYER BY: E.I. DUPONT DE NEMOURS & Co., INC.	GLASS

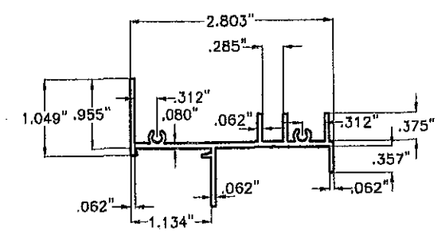

(1) FRAME HEAD & SILL

6063-T6 ALLOY

(2) FRAME JAMB

6063-T6 ALLOY

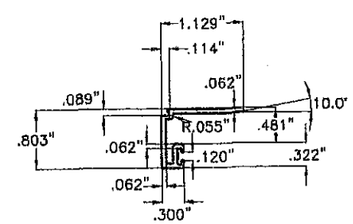

(3) GLAZING BEAD FOR FULLY STRAIGHT FRAME WINDOWS

6063-T6 ALLOY

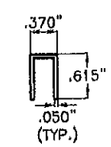

(3A) GLAZING BEAD FOR CURVED AND COMBINATION CURVED/STRAIGHT FRAME WINDOWS

6063-T6 ALLOY

COMPONENTS

SCALE 1/2" = 1"

FLORIDA BUILDING CODE (High Velocity Hurricane Zone)

PRODUCT REVISED
as complying with the Florida Building Code
Acceptance No 12-0206.07
Expiration Date FEB.17.2015
By Miami Dade Product Control
MIAMI-DADE COUNTY

WALTER A. TILLIT JR. LICENSE No. 44167 STATE OF FLORIDA PROFESSIONAL ENGINEER
P.E. SEAL, SIGNATURE & DATE

©2012 TILTECO INC.

TILTECO INC.
TILLIT TESTING & ENGINEERING COMPANY
6355 N.W. 36th. St., Ste. 305, VIRGINIA GARDENS, FL 33166
Phone : (305)871-1530 . Fax : (305)871-1531
e-mail: tilteco@aol.com
EB-0006719
WALTER A. TILLIT Jr., P.E.
FLORIDA Lic. 44167

SERIES 21000 HIGH IMPACT FIXED LAMINATED GLASS WINDOWS

GENERAL IMPACT GLASS & WINDOWS The Clear Solution
290 WEST 78 ROAD
HIALEAH, FL. 33014
PHONE: (305) 558-8103
FAX: (305) 558-6665
www.generalimpact.com

REV. NO	DESCRIPTION	DATE	REV. No	DESCRIPTION	DATE
1	OLD 09-201	01/09/12	3		
2			4		

DRAWN BY: I.A./R.E./A.G

01/09/12 DATE

12-004 DRAWING No

SHEET 2 OF 9

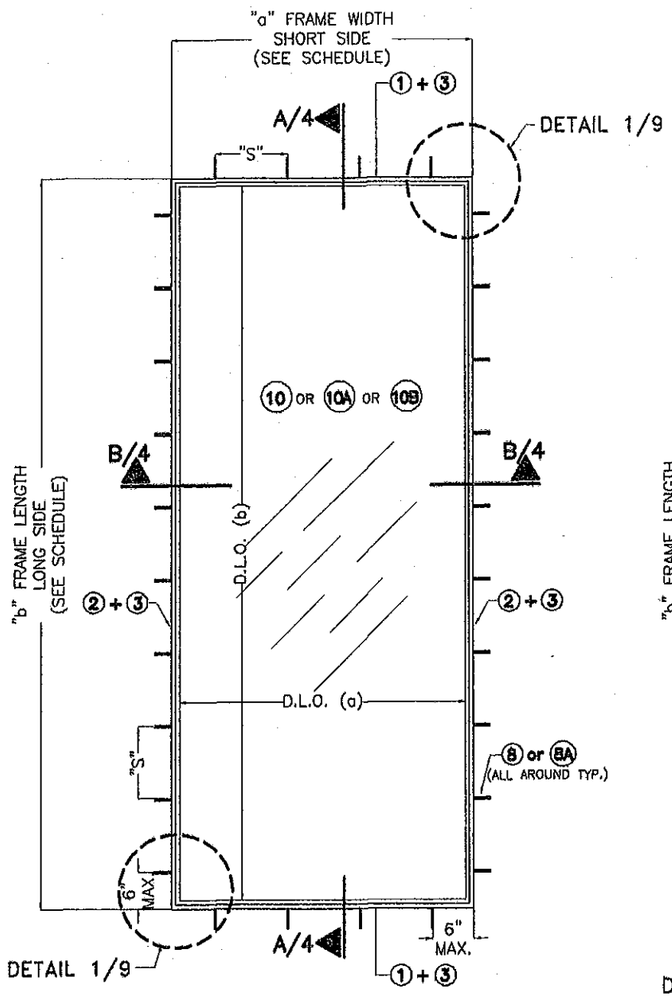

CASE 1: RECTANGULAR

SCALE: 1/2"=1'-0

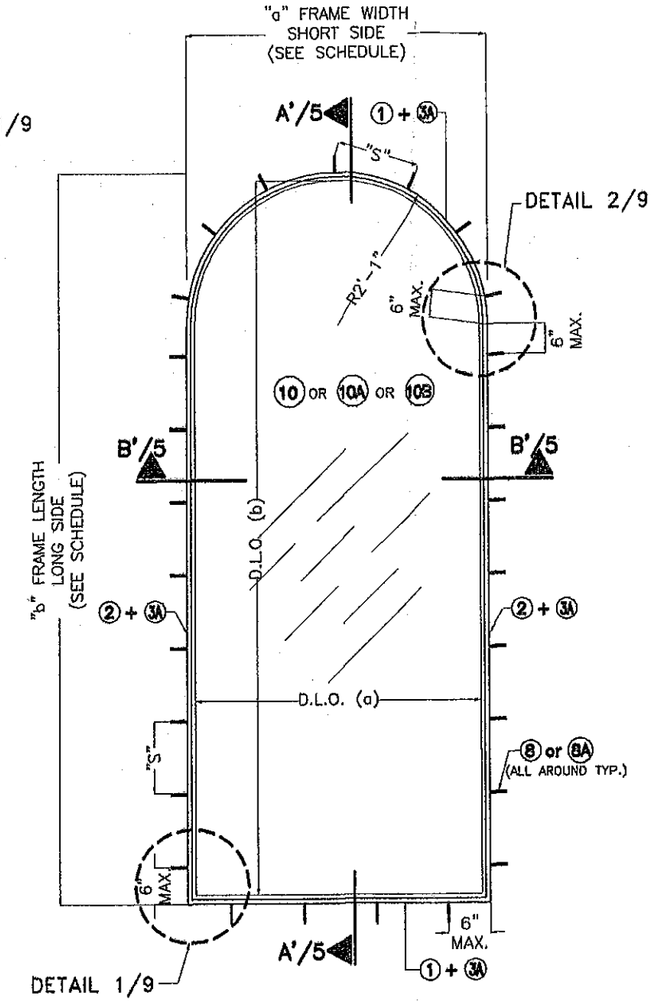

CASE 2: HALF ROUND TOP

SCALE: 1/2"=1'-0

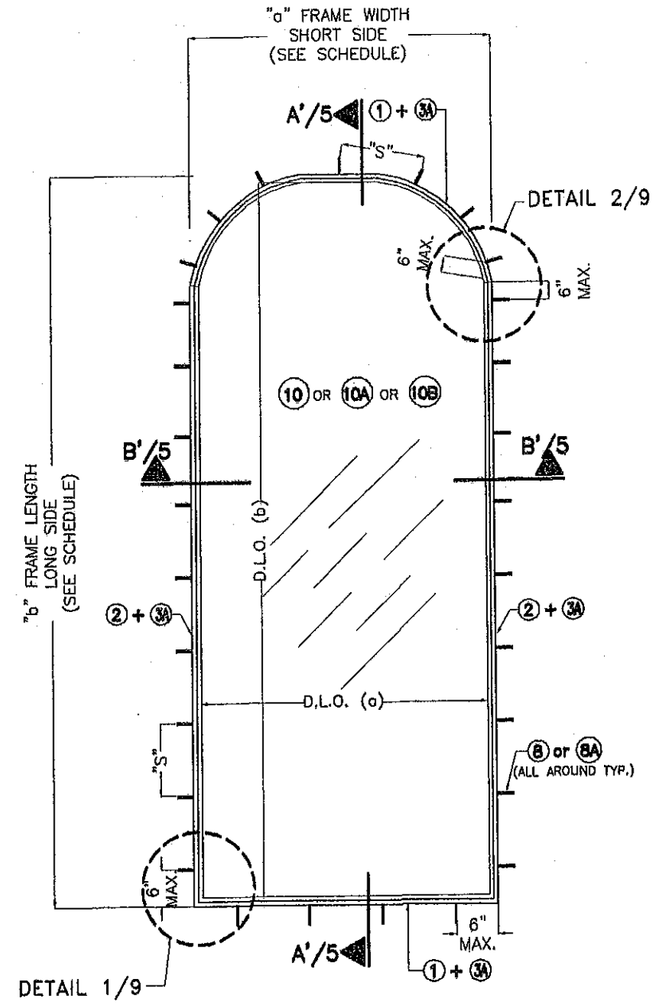

CASE 3: EYEBROW

SCALE: 1/2"=1'-0

"S"= MAX. ANCHOR SPACING
(SEE SCHEDULE ON SHEET 9)

FOR "a" FRAME WIDTH (SHORT SIDE), "b" FRAME LENGTH (LONG SIDE) AND MAX. D.L.O. (a) AND MAX. D.L.O. (b) SEE SCHEDULES ON SHEETS 6, 7 & 8.

TYPICAL EXTERIOR ELEVATIONS FOR SERIES 21000 HIGH IMPACT FIXED LAMINATED GLASS WINDOW

(SEE NOTE * ON SHEET 1)

FLORIDA BUILDING CODE (High Velocity Hurricane Zone)

PRODUCT REVISED
as complying with the Florida Building Code
Acceptance No 12-0206.07
Expiration Date FEB. 17, 2015
By Manuel Perez
Miami Dade Product Control
MIAMI-DADE COUNTY

WALTER A. TILLIT JR. LICENSE No. 44167 STATE OF FLORIDA PROFESSIONAL ENGINEER
P.E. SEAL / SIGNATURE / DATE

© 2012 TILTECO INC.

TILTECO INC.
TILLIT TESTING & ENGINEERING COMPANY
6355 N.W. 36th. St., Ste. 305, VIRGINIA GARDENS, Fl 33166
Phone : (305)871-1530 . Fax : (305)871-1531
e-mail: tilteco@aol.com
EB-0006719
WALTER A. TILLIT Jr., P.E.
FLORIDA Lic. 44167

SERIES 21000 HIGH IMPACT FIXED LAMINATED GLASS WINDOWS

GENERAL IMPACT GLASS & WINDOWS
290 WEST 78 ROAD
HIALEAH, FL. 33014
PHONE: (305) 558-8103
FAX: (305) 558-6665
www.generalimpact.com

REV. NO	DESCRIPTION	DATE	REV. No	DESCRIPTION	DATE
1	OLD 09-201	01/09/12	3		
2			4		

DRAWN BY: I.A./R.E./A.G
01/09/12 DATE
12-004 DRAWING No
SHEET 3 OF 9

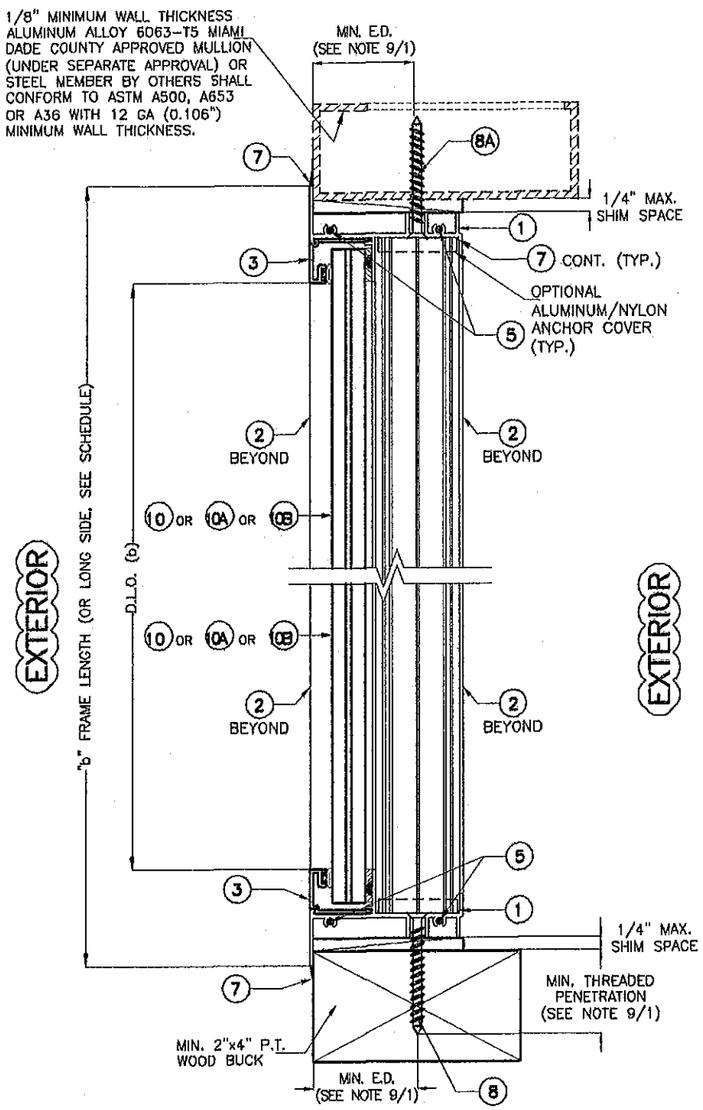

SECTION A-A

SCALE: 3/8"=1"

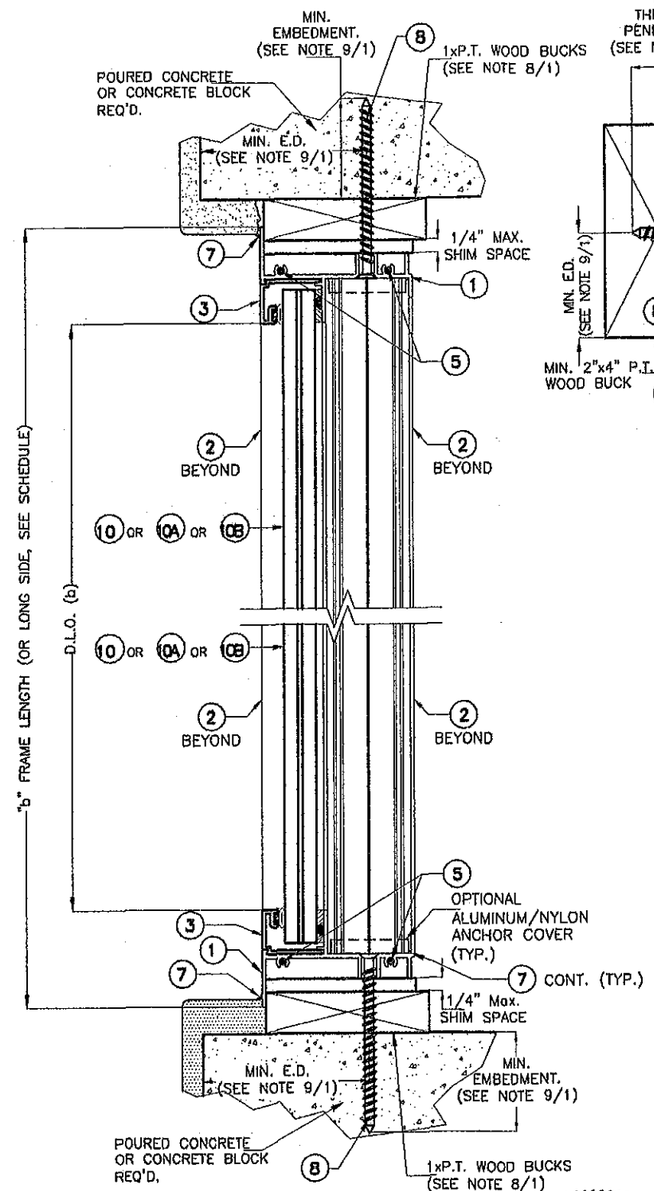

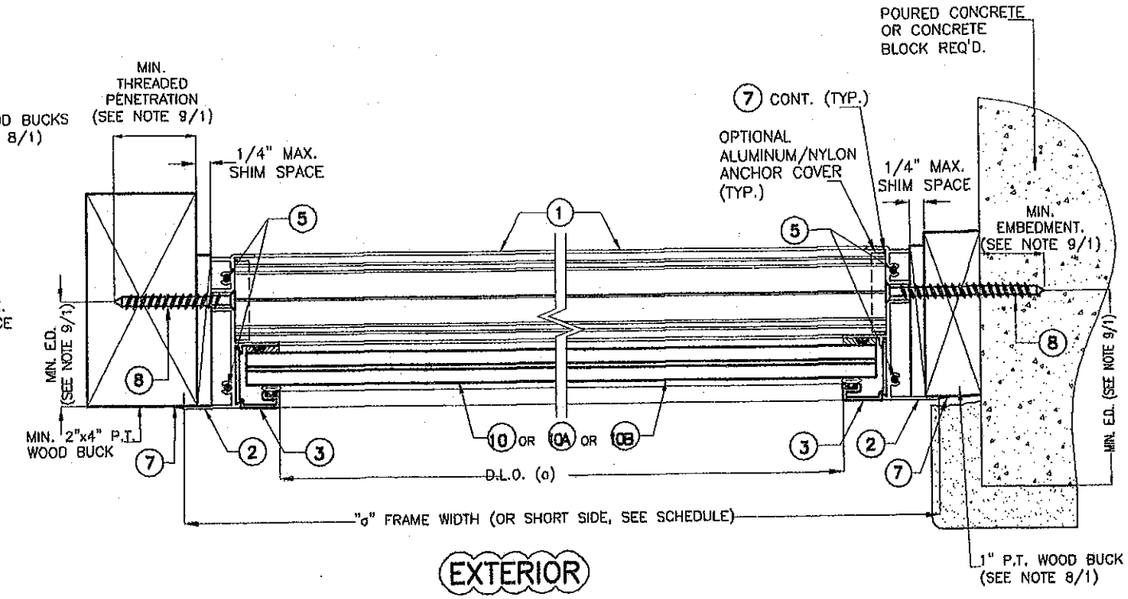

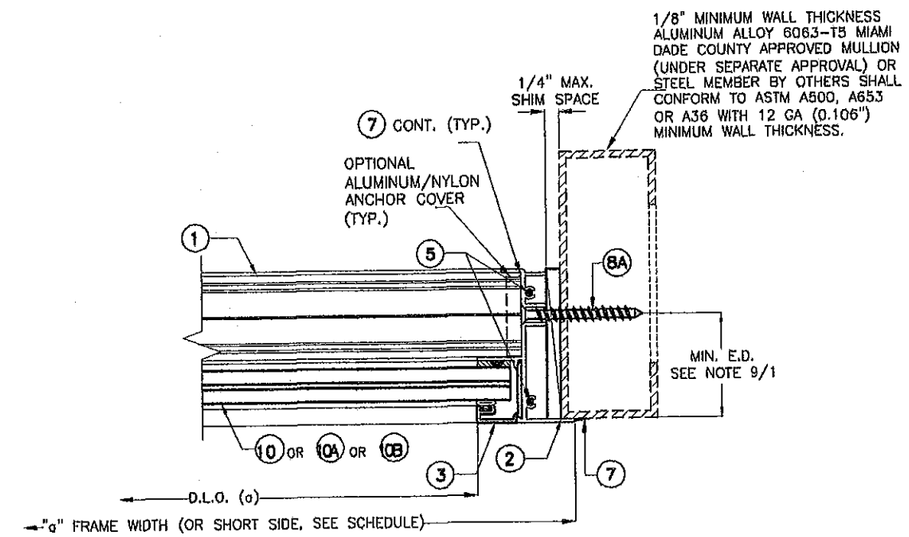

SECTION B-B

SCALE: 3/8"=1"

FLORIDA BUILDING CODE (High Velocity Hurricane Zone)

PRODUCT REVISED
as complying with the Florida Building Code
Acceptance No 12-0206.07
Expiration Date Feb.17.2015
By Maurel Sieg
Miami Dade Product Control
MIAMI-DADE COUNTY

WALTER A. TILLIT JR. LICENSE No. 44167 STATE OF FLORIDA PROFESSIONAL ENGINEER
SEAL/SIGNATURE/DATE 1/20/12

© 2012 TILTECO INC.

TILTECO INC.
TILLIT TESTING & ENGINEERING COMPANY
6355 N.W. 36th. St., Ste. 305, VIRGINIA GARDENS, Fl 33166
Phone : (305)871-1530 . Fax : (305)871-1531
e-mail: tilteco@aol.com
EB-0006719
WALTER A. TILLIT Jr., P.E.
FLORIDA Lic. 44167

SERIES 21000 HIGH IMPACT FIXED LAMINATED GLASS WINDOWS

GENERAL IMPACT GLASS & WINDOWS The Clear Solution
290 WEST 78 ROAD
HIALEAH, FL. 33014
PHONE: (305) 558-8103
FAX: (305) 558-6665
www.generalimpact.com

REV. NO	DESCRIPTION	DATE	REV. No	DESCRIPTION	DATE
1	OLD 09-201	01/09/12	3		
2			4		

DRAWN BY: I.A./R.E./A.G

01/09/12 DATE

12-004 DRAWING No

SHEET 4 OF 9

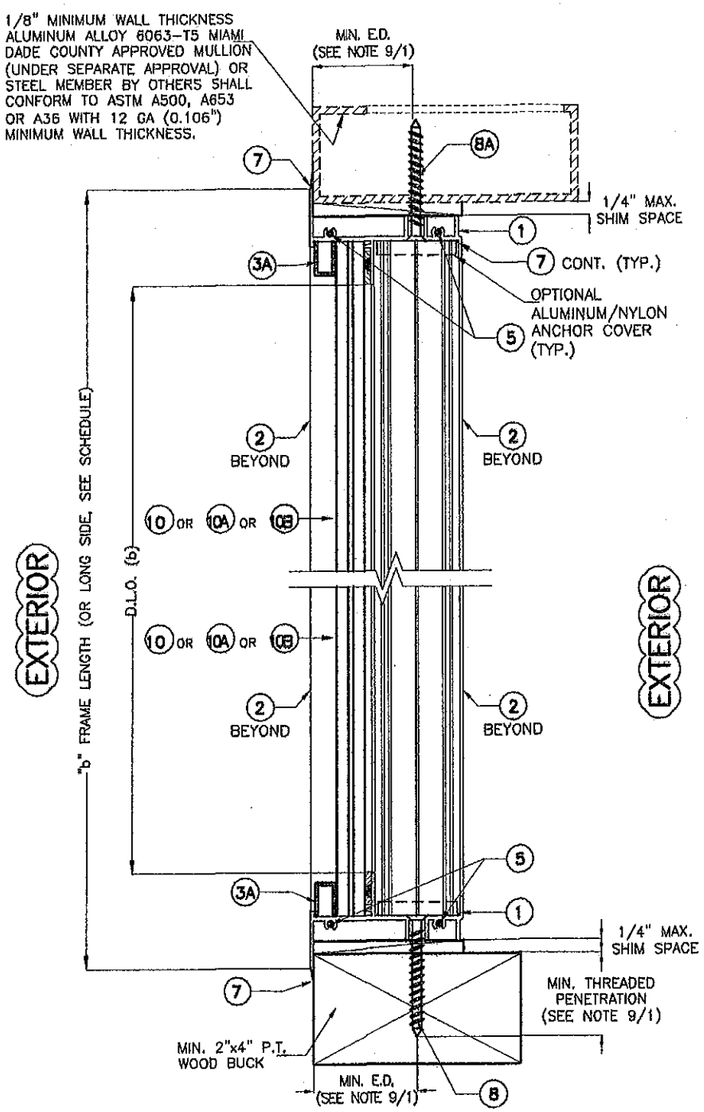

SECTION A'-A'

SCALE: 3/8"=1"

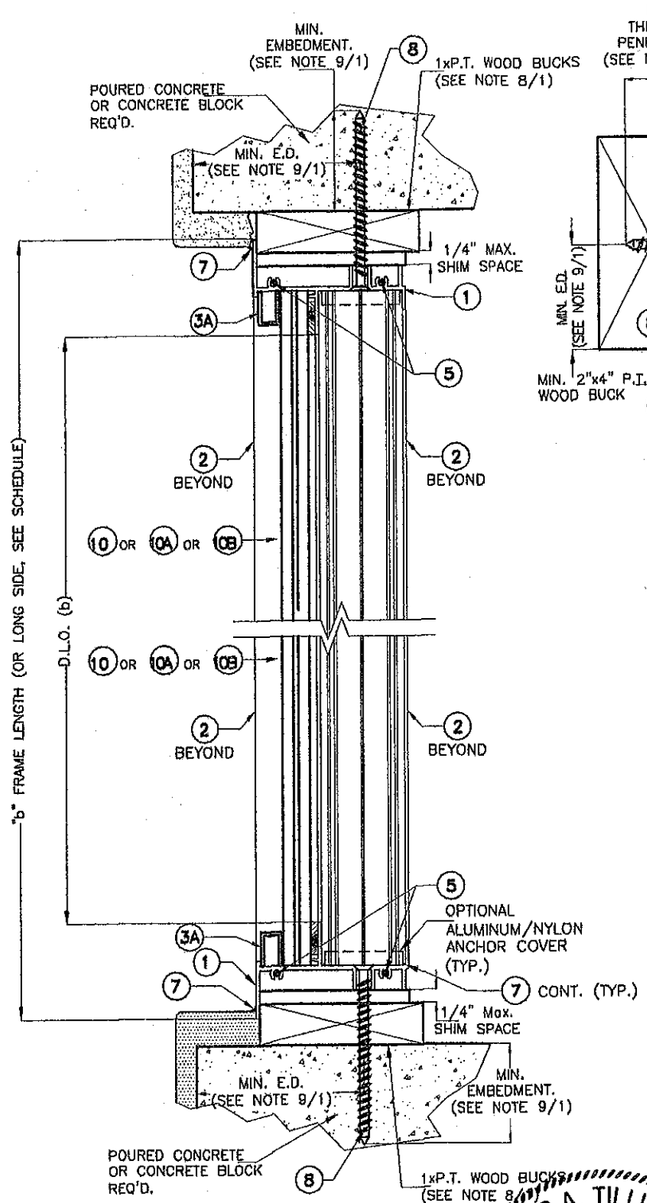

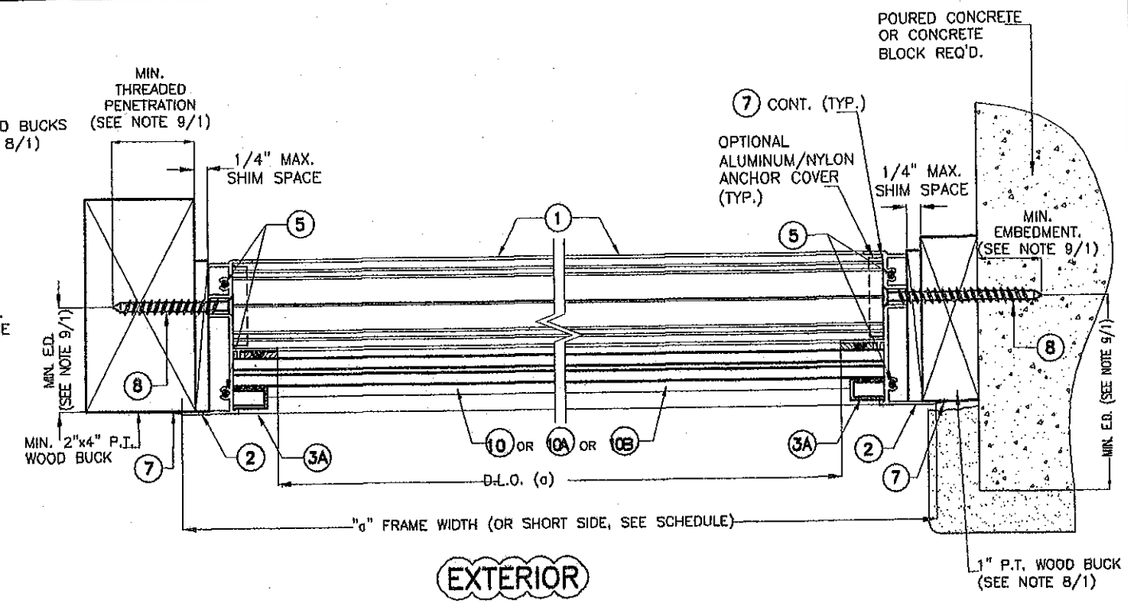

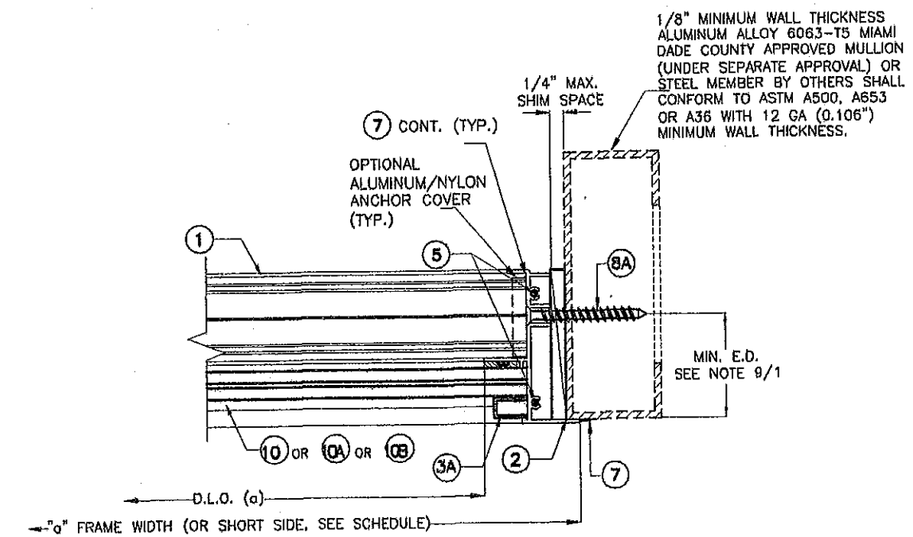

SECTION B'-B'

SCALE: 3/8"=1"

FLORIDA BUILDING CODE (High Velocity Hurricane Zone)

PRODUCT REVISED
as complying with the Florida Building Code
Acceptance No 12-0206.07
Expiration Date FEB. 17, 2015
By Manuel Perez
Miami-Dade Product Control
MIAMI-DADE COUNTY

WALTER A. TILLIT JR. LICENSE No. 44167 STATE OF FLORIDA PROFESSIONAL ENGINEER
P.E. SEAL/SIGNATURE/DATE

© 2012 TILTECO INC.

TILTECO INC.
TILLIT TESTING & ENGINEERING COMPANY
6355 N.W. 36th. St., Ste. 305, VIRGINIA GARDENS, Fl 33166
Phone : (305)871-1530 . Fax : (305)871-1531
e-mail: tilteco@aol.com
EB-0006719
WALTER A. TILLIT Jr., P.E.
FLORIDA Lic. 44167

SERIES 21000 HIGH IMPACT FIXED LAMINATED GLASS WINDOWS

GENERAL IMPACT GLASS & WINDOWS
290 WEST 78 ROAD
HIALEAH, FL. 33014
PHONE: (305) 558-8103
FAX: (305) 558-6665
www.generalimpact.com

REV. NO	DESCRIPTION	DATE	REV. No	DESCRIPTION	DATE
1	OLD 09-201	01/09/12	3		
2			4		

DRAWN BY: I.A./R.E./A.G
01/09/12 DATE
12-004 DRAWING No
SHEET 5 OF 9

MAXIMUM FRAME WIDTH "a" AND LENGTH "b" VERSUS A.S.D. DESIGN PRESSURE RATING (psf) SCHEDULE VALID FOR ALL SHAPES WITH GLASS (10)

"a"	"b"	psf +	psf −
18"	18"	130	154
	24"	130	154
	30"	130	154
	36"	130	154
	42"	130	154
	48"	130	154
	54"	130	154
	60"	130	154
	66"	130	154
	72"	130	154
	78"	130	154
	84"	130	154
	90"	130	154
	96"	130	154
	102"	130	154
	108"	130	154
	114"	130	154
	120"	130	154
	126"	130	154
	132"	130	154
	138"	130	154
	144"	130	154
	150"	130	154
	156"	130	154
	162"	130	154
	168"	130	154
	174"	130	154
	180"	130	154

"a"	"b"	psf +	psf −
24"	24"	130	154
	30"	130	154
	36"	130	154
	42"	130	154
	48"	130	154
	54"	130	154
	60"	130	154
	66"	130	154
	72"	130	154
	78"	130	154
	84"	130	154
	90"	130	154
	96"	130	154
	102"	130	154
	108"	130	154
	114"	130	154
	120"	130	154
	126"	130	154
	132"	130	154
	138"	130	154
	144"	130	154
	150"	130	154
	156"	130	154
	162"	130	154
	168"	130	154
	174"	130	154
	180"	130	154
	186"	130	154
	192"	130	154
	196"	130	154

"a"	"b"	psf +	psf −
30"	30"	130	154
	36"	130	154
	42"	130	154
	48"	130	154
	54"	130	154
	60"	130	154
	66"	130	154
	72"	130	154
	78"	130	154
	84"	130	154
	90"	130	154
	96"	130	154
	102"	130	154
	108"	130	154
	114"	130	154
	120"	130	154
	126"	130	154
	132"	130	154
	138"	130	154
	144"	130	154
	150"	130	154
	153"	130	154
	156"	130	154
	162"	130	154
	168"	130	154
	174"	130	154
	180"	130	154
	186"	130	154
	192"	130	154
	196"	130	154

"a"	"b"	psf +	psf −
36"	36"	130	154
	42"	130	154
	48"	130	154
	54"	130	154
	60"	130	154
	66"	130	154
	72"	130	154
	78"	130	154
	84"	130	154
	90"	130	154
	96"	130	154
	102"	130	154
	108"	130	154
	114"	130	154
	120"	130	154
	126"	130	154
	132"	130	154
	138"	130	154
	144"	130	154
	150"	130	154
	156"	130	154
	162"	130	154
	166"	130	154

"a"	"b"	psf +	psf −
42"	42"	130	154
	48"	130	154
	54"	130	154
	60"	130	154
	66"	130	154
	72"	130	154
	78"	130	154
	84"	130	154
	90"	130	154
	96"	130	154
	102"	130	154
	108"	130	154
	114"	130	154
	120"	130	154
	126"	130	154
	132"	130	154
	138"	130	154
	142"	130	154
48"	48"	130	154
	54"	130	154
	60"	130	154
	66"	130	154
	72"	130	154
	78"	130	154
	84"	130	154
	90"	130	154
	95"	130	154
	96"	130	154
	102"	130	154
	108"	130	154
	114"	130	154
	120"	130	154
	125"	130	152

"a"	"b"	psf +	psf −
54"	54"	120.3	142.5
	60"	120.3	142.5
	66"	120.3	142.5
	72"	120.3	142.5
	78"	120.3	142.5
	84"	120.3	142.5
	90"	120.3	142.5
	96"	120.3	142.5
	102"	120.3	142.5
	108"	120.3	142.5
	111"	120.3	139
60"	60"	108.3	128.3
	66"	108.3	128.3
	72"	108.3	128.3
	76"	108.3	128.3
	78"	108.3	128.3
	84"	108.3	128.3
	90"	108.3	128.3
	96"	108.3	128.3
	100"	108.3	128.3
66"	66"	98.5	116.67
	72"	98.5	116.67
	78"	98.5	116.6
	84"	98.5	116.6
	90"	98.5	116.6
72"	72"	90.3	106.9
	78"	90.3	106.9
	83"	90.3	106.9

MAXIMUM DAY LIGHT OPENING (D.L.O.) FOR A GIVEN COMPONENT AT EACH END OF GLASS

SIDE	COMPONENTS @ EACH END OF GLASS	MAX. DAY LIGHT OPENING (D.L.O.) Formula
MAX. D.L.O. (a) (SHORT SIDE)	② + ③, ② + ③ OR ② + ③A, ② + ③A	"a"−3.526"
MAX. D.L.O. (b) (LONG SIDE)	① + ③, ① + ③ OR ① + ③A, ① + ③A	"b"−3.526"

DIMENSIONS LEGEND

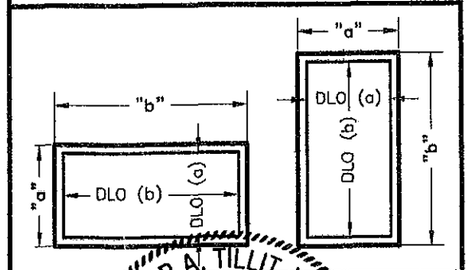

PRODUCT REVISED
as complying with the Florida
Building Code
Acceptance No 12-0206.07
Expiration Date Feb. 17, 2015
By
Miami Dade Product Control
MIAMI-DADE COUNTY

WALTER A. TILLIT JR. LICENSE No. 44167 STATE OF FLORIDA PROFESSIONAL ENGINEER

SEAL / SIGNATURE / DATE

© 2012 TILTECO INC.

TILTECO INC.
TILLIT TESTING & ENGINEERING COMPANY
6355 N.W. 36th. St., Ste. 305, VIRGINIA GARDENS, Fl 33166
Phone : (305)871-1530 . Fax : (305)871-1531
e-mail: tilteco@aol.com
EB-0006719
WALTER A. TILLIT Jr., P.E.
FLORIDA Lic. 44167

FLORIDA BUILDING CODE (High Velocity Hurricane Zone)

SERIES 21000 HIGH IMPACT FIXED LAMINATED GLASS WINDOWS

GENERAL IMPACT GLASS & WINDOWS The Clear Solution
290 WEST 78 ROAD
HIALEAH, FL. 33014
PHONE: (305) 558-8103
FAX: (305) 558-6665
www.generalimpact.com

REV. NO	DESCRIPTION	DATE	REV. No	DESCRIPTION	DATE
1	OLD 08-201	01/09/12	3		
2			4		

DRAWN BY: I.A./R.E./A.G
01/09/12 DATE
12-004 DRAWING No
SHEET 6 OF 9

MAXIMUM FRAME WIDTH "a" AND LENGTH "b" VERSUS A.S.D. DESIGN PRESSURE RATING (psf) SCHEDULE VALID FOR ALL SHAPES WITH GLASS (10A)

"a"	"b"	psf +	psf −
18"	18"	90	90
	24"	90	90
	30"	90	90
	36"	90	90
	42"	90	90
	48"	90	90
	54"	90	90
	60"	90	90
	66"	90	90
	72"	90	90
	78"	90	90
	84"	90	90
	90"	90	90
	96"	90	90
	102"	90	90
	108"	90	90
	114"	90	90
	120"	90	90
	126"	90	90
	132"	90	90
	138"	90	90
	144"	90	90
	150"	90	90
	156"	90	90
	162"	90	90
	168"	90	90
	174"	90	90
	180"	90	90

"a"	"b"	psf +	psf −
24"	24"	90	90
	30"	90	90
	36"	90	90
	42"	90	90
	48"	90	90
	54"	90	90
	60"	90	90
	66"	90	90
	72"	90	90
	78"	90	90
	84"	90	90
	90"	90	90
	96"	90	90
	102"	90	90
	108"	90	90
	114"	90	90
	120"	90	90
	126"	90	90
	132"	90	90
	138"	90	90
	144"	90	90
	150"	90	90
	156"	90	90
	162"	90	90
	168"	90	90
	174"	90	90
	180"	90	90
	186"	90	90
	191"	90	90

"a"	"b"	psf +	psf −
30"	30"	90	90
	36"	90	90
	42"	90	90
	48"	90	90
	54"	90	90
	60"	90	90
	66"	90	90
	72"	90	90
	78"	90	90
	84"	90	90
	90"	90	90
	96"	90	90
	102"	90	90
	108"	90	90
	114"	90	90
	120"	90	90
	126"	90	90
	132"	90	90
	138"	90	90
	144"	90	90
	150"	90	90
	153"	90	90
	156"	90	90
	162"	90	90
	168"	90	90
	174"	90	90
	179	90	90

"a"	"b"	psf +	psf −
36"	36"	90	90
	42"	90	90
	48"	90	90
	54"	90	90
	60"	90	90
	66"	90	90
	72"	90	90
	78"	90	90
	84"	90	90
	90"	90	90
	96"	90	90
	102"	90	90
	108"	90	90
	114"	90	90
	120"	90	90
	126"	90	90
	132"	90	90
	138"	90	90
	144"	90	90
	150"	90	90
	152"	90	90

"a"	"b"	psf +	psf −
42"	42"	90	90
	48"	90	90
	54"	90	90
	60"	90	90
	66"	90	90
	72"	90	90
	78"	90	90
	84"	90	90
	90"	90	90
	96"	90	90
	102"	90	90
	108"	90	90
	114"	90	90
	120"	90	90
	126"	90	90
	130"	90	90
48"	48"	90	90
	54"	90	90
	60"	90	90
	66"	90	90
	72"	90	90
	78"	90	90
	84"	90	90
	90"	90	90
	95"	90	90
	96"	90	90
	102"	90	90
	108"	90	90
	114"	90	90

"a"	"b"	psf +	psf −
54"	54"	83.3	83.3
	60"	83.3	83.3
	66"	83.3	83.3
	72"	83.3	83.3
	78"	83.3	83.3
	84"	83.3	83.3
	90"	83.3	83.3
	96"	83.3	83.3
	101"	83.3	83.3
60"	60"	75	75
	66"	75	75
	72"	75	75
	76"	75	75
	78"	75	75
	84"	75	75
	90"	75	75
66"	66"	68.2	68.2
	72"	68.2	68.2
	76"	68.2	68.2
	78"	68.2	68.2
	83"	68.2	68.2
72"	72"	62.5	62.5
	76"	62.5	62.5

DIMENSIONS LEGEND

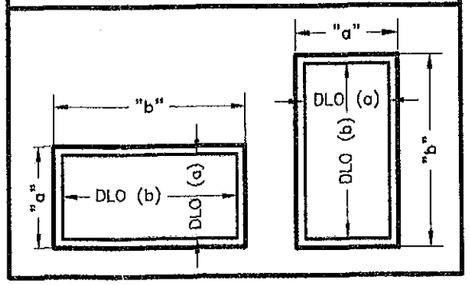

MAXIMUM DAY LIGHT OPENING (D.L.O.) FOR A GIVEN COMPONENT AT EACH END OF GLASS

SIDE	COMPONENTS @ EACH END OF GLASS	MAX. DAY LIGHT OPENING (D.L.O.) Formula
MAX. D.L.O. (a) (SHORT SIDE)	(2) + (3), (2) + (3) OR (2) + (3A), (2) + (3A)	"a" − 3.526"
MAX. D.L.O. (b) (LONG SIDE)	(1) + (3), (1) + (3) OR (1) + (3A), (1) + (3A)	"b" − 3.526"

PRODUCT REVISED
as complying with the Florida Building Code
Acceptance No 12-0206.07
Expiration Date FEB. 11, 2015
By Miami-Dade Product Control

MIAMI-DADE COUNTY

WALTER A. TILLIT JR. LICENSE No. 44167 STATE OF FLORIDA PROFESSIONAL ENGINEER

SEAL / SIGNATURE / DATE

© 2012 TILTECO INC.

TILTECO INC.
TILLIT TESTING & ENGINEERING COMPANY
6355 N.W. 36th. St., Ste. 305, VIRGINIA GARDENS, Fl 33166
Phone : (305)871-1530 , Fax : (305)871-1531
e-mail: tilteco@aol.com
EB-0006719
WALTER A. TILLIT Jr., P.E.
FLORIDA Lic. 44167

FLORIDA BUILDING CODE (High Velocity Hurricane Zone)

SERIES 21000 HIGH IMPACT FIXED LAMINATED GLASS WINDOWS

GENERAL IMPACT GLASS & WINDOWS
290 WEST 78 ROAD
HIALEAH, FL. 33014
PHONE: (305) 558-8103
FAX: (305) 558-6665
www.generalimpact.com

REV. NO	DESCRIPTION	DATE	REV. No	DESCRIPTION	DATE
1	OLD 09-201	01/09/12	3		
2			4		

DRAWN BY: I.A./R.E./A.G

01/09/12 DATE

12-004 DRAWING No

SHEET 7 OF 9

MAXIMUM FRAME WIDTH "a" AND LENGTH "b" VERSUS A.S.D. DESIGN PRESSURE RATING (psf) SCHEDULE VALID FOR ALL SHAPES WITH GLASS 10B

"a"	"b"	psf +	psf −
18"	18"	75	75
	24"	75	75
	30"	75	75
	36"	75	75
	42"	75	75
	48"	75	75
	54"	75	75
	60"	75	75
	66"	75	75
	72"	75	75
	78"	75	75
	84"	75	75
	90"	75	75
	96"	75	75
	102"	75	75
	108"	75	75
	114"	75	75
	120"	75	75
	126"	75	75
	132"	75	75
	138"	75	75
	144"	75	75
	150"	75	75
	156"	75	75
	162"	75	75
	168"	75	75
	174"	75	75
	180"	75	75

"a"	"b"	psf +	psf −
24"	24"	75	75
	30"	75	75
	36"	75	75
	42"	75	75
	48"	75	75
	54"	75	75
	60"	75	75
	66"	75	75
	72"	75	75
	78"	75	75
	84"	75	75
	90"	75	75
	96"	75	75
	102"	75	75
	108"	75	75
	114"	75	75
	120"	75	75
	126"	75	75
	132"	75	75
	138"	75	75
	144"	75	75
	150"	75	75
	156"	75	75
	162"	75	75
	168"	75	75
	174"	75	75
	180"	75	75
	185"	75	75

"a"	"b"	psf +	psf −
30"	30"	75	75
	36"	75	75
	42"	75	75
	48"	75	75
	54"	75	75
	60"	75	75
	66"	75	75
	72"	75	75
	78"	75	75
	84"	75	75
	90"	75	75
	96"	75	75
	102"	75	75
	108"	75	75
	114"	75	75
	120"	75	75
	126"	74	74
	132"	72	72
	138"	71	71
	144"	71	71
	148"	70	70

"a"	"b"	psf +	psf −
36"	36"	75	75
	42"	75	75
	48"	75	75
	54"	75	75
	60"	75	75
	66"	75	75
	72"	75	75
	78"	75	75
	84"	75	75
	90"	75	75
	96"	74	74
	102"	69	69
	108"	65	65
	114"	62	62
	120"	59	59
	123"	58	58

"a"	"b"	psf +	psf −
42"	42"	75	75
	48"	75	75
	54"	75	75
	60"	75	75
	66"	75	75
	72"	75	75
	78"	75	75
	84"	75	75
	90"	75	75
	96"	69	69
	102"	63	63
	105"	61	61

"a"	"b"	psf +	psf −
48"	48"	75	75
	54"	75	75
	60"	75	75
	66"	75	75
	72"	75	75
	78"	75	75
	84"	75	75
	90"	70	70
	92"	69	69
54"	54"	69.4	69.4
	60"	69.4	69.4
	66"	69.4	69.4
	72"	69.4	69.4
	78"	69.4	69.4
	82"	69.4	69.4
60"	60"	62.5	62.5
	66"	62.5	62.5
	72"	62.5	62.5
	74"	62.5	62.5

MAXIMUM DAY LIGHT OPENING (D.L.O.) FOR A GIVEN COMPONENT AT EACH END OF GLASS

SIDE	COMPONENTS @ EACH END OF GLASS	MAX. DAY LIGHT OPENING (D.L.O.) Formula
MAX. D.L.O. (a) (SHORT SIDE)	②+③, ②+③ OR ②+③A, ②+③A	"a"−3.526"
MAX. D.L.O. (b) (LONG SIDE)	①+③, ①+③ OR ①+③A, ①+③A	"b"−3.526"

DIMENSIONS LEGEND

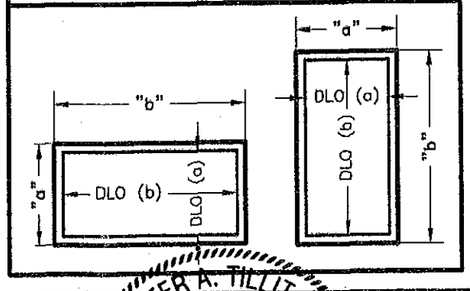

PRODUCT REVISED
as complying with the Florida
Building Code
Acceptance No 12-0206.07
Expiration Date FEB. 17, 2015
By Manuel Perez
Miami Dade Product Control

MIAMI-DADE COUNTY

WALTER A. TILLIT JR. LICENSE NO. 44167 STATE OF FLORIDA PROFESSIONAL ENGINEER
SEAL SIGNATURE DATE

©2012 TILTECO INC.

TILTECO INC.
TILLIT TESTING & ENGINEERING COMPANY
6355 N.W. 36th. St., Ste. 305, VIRGINIA GARDENS, Fl 33166
Phone : (305)871-1530 . Fax : (305)871-1531
e-mail: tilteco@aol.com
EB-0006719
WALTER A. TILLIT Jr., P.E.
FLORIDA Lic. 44167

FLORIDA BUILDING CODE (High Velocity Hurricane Zone)

SERIES 21000 HIGH IMPACT FIXED LAMINATED GLASS WINDOWS

GENERAL IMPACT GLASS & WINDOWS The Clear Solution
290 WEST 78 ROAD
HIALEAH, FL. 33014
PHONE: (305) 558-8103
FAX: (305) 558-6665
www.generalimpact.com

REV. NO	DESCRIPTION	DATE	REV. No	DESCRIPTION	DATE
1	OLD 09-201	01/09/12	3		
2			4		

DRAWN BY: I.A./R.E./A.G
01/09/12 DATE
12-004 DRAWING No
SHEET 8 OF 9

MAXIMUM ANCHOR SPACING SCHEDULE "S"

SUBSTRATE	ANCHOR TYPE	NEGATIVE A.S.D. DESIGN PRESSURE RATING (psf)	HEAD/SILL	JAMB
CONCRETE OR BLOCK (SEE NOTE 9A & 9B/1)	1/4"ø ULTRACON (8)	75 or less	9" O.C.	12" O.C.
		> 75 up to 90	9" O.C.	11 1/2" O.C.
		> 90 up to 130	8" O.C.	8" O.C.
		> 130 up to 154	6 1/2" O.C.	6 1/2" O.C.
WOOD (SEE NOTE 9C/1)	1/4"ø ULTRACON (8)	75 or less	9" O.C.	9 1/2" O.C.
		> 75 up to 90	8" O.C.	8" O.C.
		> 90 up to 130	5 1/2" O.C.	5 1/2" O.C.
		> 130 up to 154	4 1/2" O.C.	4 1/2" O.C.
METAL (SEE NOTE 9D/1 & 9E/1)	1/4"ø TEK SCREW (8A)	75 or less	9" O.C.	12" O.C.
		> 75 up to 90	9" O.C.	12" O.C.
		> 90 up to 130	8" O.C.	8" O.C.
		> 130 up to 154	7" O.C.	7" O.C.

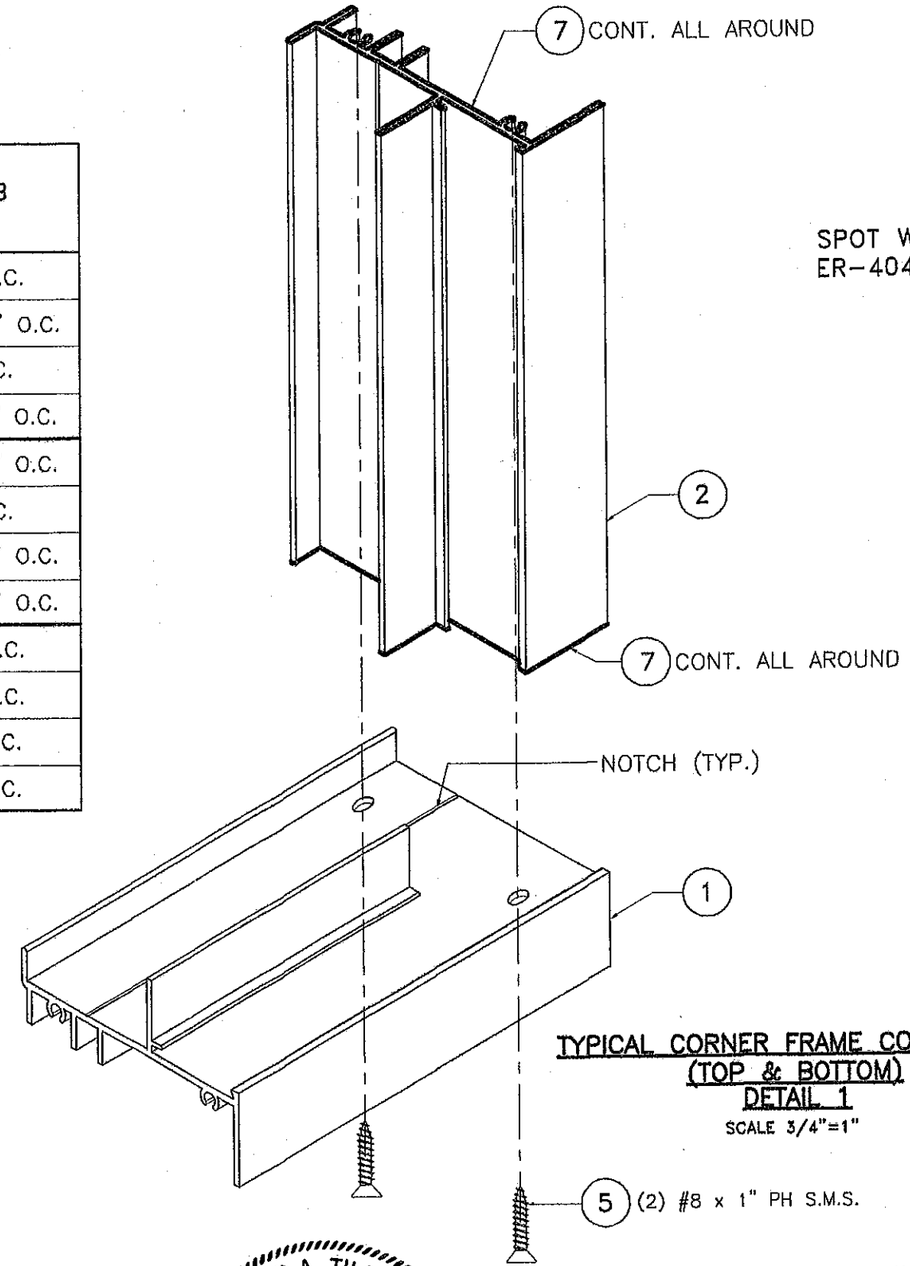

TYPICAL CORNER FRAME CONNECTION (TOP & BOTTOM) DETAIL 1

SCALE 3/4"=1"

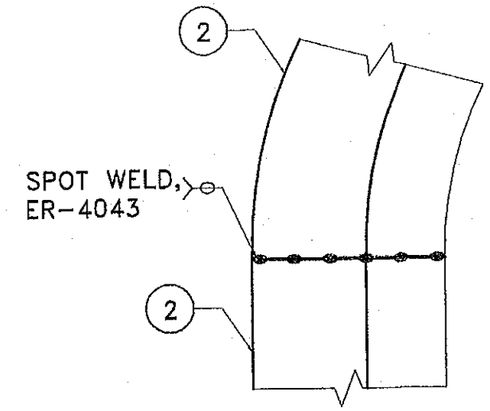

TYPICAL CORNER FRAME CONNECTION (TOP) DETAIL 2

SCALE 3/4"=1"

FLORIDA BUILDING CODE (High Velocity Hurricane Zone)

PRODUCT REVISED
as complying with the Florida Building Code
Acceptance No 12-0206.07
Expiration Date FEB. 17, 2015
By Miami Dade Product Control

MIAMI-DADE COUNTY

WALTER A. TILLIT JR. LICENSE No. 44167 STATE OF FLORIDA PROFESSIONAL ENGINEER

PE SEAL / SIGNATURE / DATE

©2012 TILTECO INC.

TILTECO INC.
TILLIT TESTING & ENGINEERING COMPANY
6355 N.W. 36th. St., Ste. 305, VIRGINIA GARDENS, Fl 33166
Phone : (305)871-1530 . Fax : (305)871-1531
e-mail: tilteco@aol.com
EB-0006719
WALTER A. TILLIT Jr., P.E.
FLORIDA Lic. 44167

SERIES 21000 HIGH IMPACT FIXED LAMINATED GLASS WINDOWS

GENERAL IMPACT GLASS & WINDOWS "The Clear Solution"
290 WEST 78 ROAD
HIALEAH, FL. 33014
PHONE: (305) 558-8103
FAX: (305) 558-6665
www.generalimpact.com

REV. NO	DESCRIPTION	DATE	REV. No	DESCRIPTION	DATE
1	OLD 09-201	01/09/12	3		
2			4		

DRAWN BY: I.A./R.E./A.G

01/09/12 DATE

12-004 DRAWING No

SHEET 9 OF 9