MIAMI-DADE COUNTY
DEPARTMENT OF PERMITTING, ENVIRONMENT, AND REGULATORY AFFAIRS (PERA)
BOARD AND CODE ADMINISTRATION DIVISION

MIAMI-DADE COUNTY
PRODUCT CONTROL SECTION
11805 SW 26 Street, Room 208
Miami, Florida 33175-2474
T (786) 315-2590 F (786) 315-2599
www.miamidade.gov/building

NOTICE OF ACCEPTANCE (NOA)

Cast-Crete Corporation
P.O. Box 24567
Tampa, Florida 33623

SCOPE:
This NOA is being issued under the applicable rules and regulations governing the use of construction materials. The documentation submitted has been reviewed and accepted by Miami-Dade County PERA-Product Control Section to be used in Miami Dade County and other areas where allowed by the Authority Having Jurisdiction (AHJ).

This NOA shall not be valid after the expiration date stated below. The Miami-Dade County Product Control Section (In Miami Dade County) and/or the AHJ (in areas other than Miami Dade County) reserve the right to have this product or material tested for quality assurance purposes. If this product or material fails to perform in the accepted manner, the manufacturer will incur the expense of such testing and the AHJ may immediately revoke, modify, or suspend the use of such product or material within their jurisdiction. PERA reserves the right to revoke this acceptance, if it is determined by Miami-Dade County Product Control Section that this product or material fails to meet the requirements of the applicable building code.

This product is approved as described herein, and has been designed to comply with the High Velocity Hurricane Zone of the Florida Building Code.

DESCRIPTION: (Cast-Crete) 4", 6" & 12" High Strength Precast and Prestressed Concrete Lintels

APPROVAL DOCUMENT: Drawing No. FD4612, titled "Precast and Prestressed Lintel Details", sheet 1 of 1, prepared by Craig Parrino, P.E., dated March 24, 2003 and Drawing No. LT4612, titled "Cast-Crete 4", 6" & 12" Lintel Safe Load Tables", sheets 1 through 3 of 3, prepared by Craig Parrino, P.E., dated March 24, 2003, last revision dated March 11, 2008, all signed and sealed by Craig Parrino, P.E., on March 22, 2012, all bearing the Miami-Dade County Product Control Revision stamp with the Notice of Acceptance number and the expiration date by the Miami-Dade County Product Control Section.

MISSILE IMPACT RATING: Large and Small Missile Impact Resistant

LABELING: Each lintel shall bear a permanent label with the manufacturer's name or logo and the Miami-Dade County logo.

RENEWAL of this NOA shall be considered after a renewal application has been filed and there has been no change in the applicable building code negatively affecting the performance of this product.

TERMINATION of this NOA will occur after the expiration date or if there has been a revision or change in the materials, use, and/or manufacture of the product or process. Misuse of this NOA as an endorsement of any product, for sales, advertising or any other purposes shall automatically terminate this NOA. Failure to comply with any section of this NOA shall be cause for termination and removal of NOA.

ADVERTISEMENT: The NOA number preceded by the words Miami-Dade County, Florida, and followed by the expiration date may be displayed in advertising literature. If any portion of the NOA is displayed, then it shall be done in its entirety.

INSPECTION: A copy of this entire NOA shall be provided to the user by the manufacturer or its distributors and shall be available for inspection at the job site at the request of the Building Official.

This NOA **revises NOA # 08-0320.09** and consists of this page 1, evidence submitted pages E-1 and E-2 as well as approval document mentioned above.

The submitted documentation was reviewed by **Helmy A. Makar, P.E., M.S.**

MIAMI-DADE COUNTY APPROVED

Helmy A. Makar
04/05/2012

NOA No. 12-0209.12
Expiration Date: 09/11/2013
Approval Date: 04/05/2012

Cast-Crete Corporation

NOTICE OF ACCEPTANCE: EVIDENCE SUBMITTED

1. EVIDENCE SUBMITTED UNDER PREVIOUS APPROVAL #03-0605.04

A. DRAWINGS

1. *Drawing No. FD4612, titled "Precast and Prestressed Lintel Details", sheet 1 of 1, prepared by Craig Parrino, P.E., dated March 24, 2003 and Drawing No. LT4612, titled "Cast-Crete 4", 6" & 12" Lintel Safe Load Tables", sheets 1 through 3 of 3, prepared by Craig Parrino, P.E., dated March 24, 2003, last revision #1 dated April 28, 2003 both drawings signed and sealed by Craig Parrino, P.E.*

B. TESTS

1. *Test report on flexural testing on 4", 6" & 12" Precast Concrete Lintels Filled and Unfilled Models, total of (13) concrete lintel specimens, per ASTM E-529-94, prepared by Applied Research Laboratories, Report No. 30404A, dated 04/10/03, signed and sealed by Christopher A. Hamon, P.E.*

C. CALCULATIONS

1. *Calculations for Cast-Crete Lintels, dated 05/29/03, 207 pages, prepared by Craig Parrino, P.E., signed and sealed by Craig Parrino, P.E.*
2. *Calculations for Cast-Crete Lintels, dated 05/29/03, 140 pages, prepared by Craig Parrino, P.E., signed and sealed by Craig Parrino, P.E.*

D. MATERIAL CERTIFICATION:

1. *Quality System Manual for Cast-Crete Machine Made Precast Lintels revised on May 1, 2002.*
2. *Cast-Crete Quality System Manual for Prestressed Products dated 2002.*

2. EVIDENCE SUBMITTED UNDER PREVIOUS APPROVAL # 08-0320.09

A. DRAWINGS

1. *Drawing No. FD4612, titled "Precast and Prestressed Lintel Details", sheet 1 of 1, prepared by Craig Parrino, P.E., dated March 24, 2003 and Drawing No. LT4612, titled "Cast-Crete 4", 6" & 12" Lintel Safe Load Tables", sheets 1 through 3 of 3, prepared by Craig Parrino, P.E., dated March 24, 2003, last revision dated March 11, 2008.*

B. TESTS

1. *None.*

C. CALCULATIONS

1. *None.*

D. QUALITY ASSURANCE

1. *By Miami-Dade County Building Code Compliance Office.*

E. MATERIAL CERTIFICATIONS

1. *None.*

Helmy A. Makar, P.E., M.S.
PERA, Product Control Unit Supervisor
NOA No. 12-0209.12
Expiration Date: 09/11/2013
Approval Date: 04/05/2012

NOTICE OF ACCEPTANCE: EVIDENCE SUBMITTED

3. NEW EVIDENCE SUBMITTED

A. DRAWINGS

1. *Drawing No. FD4612, titled "Precast and Prestressed Lintel Details", sheet 1 of 1, prepared by Craig Parrino, P.E., dated March 24, 2003 and Drawing No. LT4612, titled "Cast-Crete 4", 6" & 12" Lintel Safe Load Tables", sheets 1 through 3 of 3, prepared by Craig Parrino, P.E., dated March 24, 2003, last revision dated March 11, 2008, all signed and sealed by Craig Parrino, P.E., on March 22, 2012.*

B. TESTS

1. *None.*

C. CALCULATIONS

1. *None.*

D. QUALITY ASSURANCE

1. *By Miami-Dade County Department of Permitting, Environment, and Regulatory Affairs (PERA).*

E. MATERIAL CERTIFICATIONS

1. *None.*

F. OTHER

1. *Letter from Cast-Crete Corporation, dated February 03, 2012, signed and sealed by Craig Parrino, P.E., certifying compliance with the Florida Building Code, 2010 Edition.*

Helmy A. Makar, P.E., M.S.
PERA, Product Control Unit Supervisor
NOA No. 12-0209.12
Expiration Date: 09/11/2013
Approval Date: 04/05/2012

CAST-CRETE® HIGH STRENGTH PRECAST AND PRESTRESSED CONCRETE LINTELS

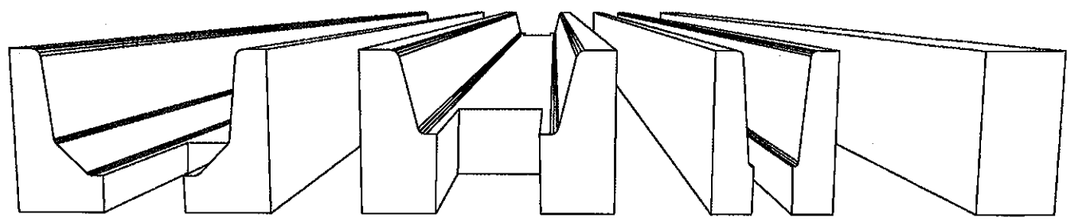

12" PRECAST U-LINTEL | 12" PRECAST w/ 2" RECESS DOOR U-LINTEL | 6" PRECAST U-LINTEL | 4" SOLID LINTEL

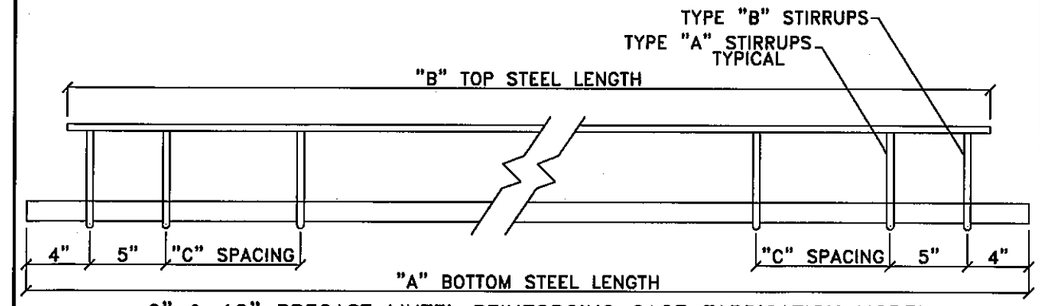

6" & 12" PRECAST LINTEL REINFORCING CAGE FABRICATION MODEL

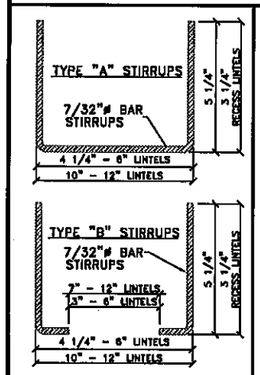

STIRRUP DETAILS
SCALE: N.T.S.

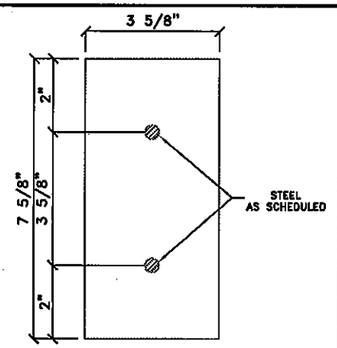

4" SOLID LINTEL
SCALE: 1/2" = 1"

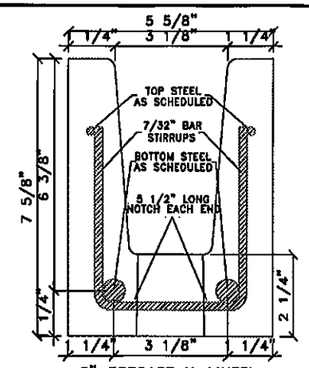

6" PRECAST U-LINTEL
SCALE: 1/2" = 1"

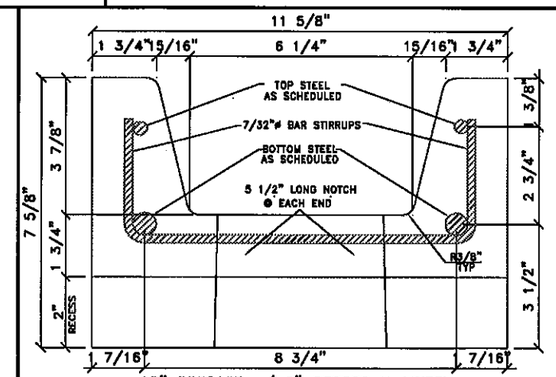

12" PRECAST w/ 2" RECESS U-LINTEL
SCALE: 1/2" = 1"

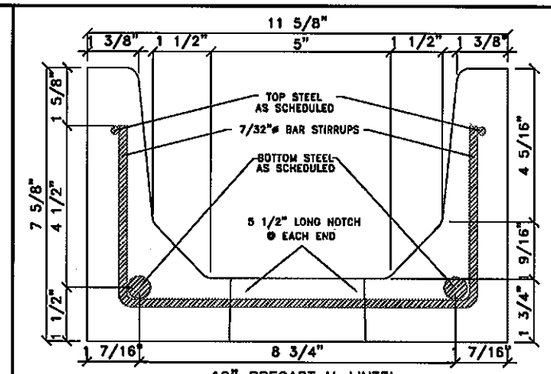

12" PRECAST U-LINTEL
SCALE: 1/2" = 1"

4" SOLID LINTEL DATA TABLE

LINTEL LENGTH	REINFORCING STEEL	LENGTH
3'-6"	(2) #3 REBAR	3'-5"
4'-0"	(2) #3 REBAR	3'-11"
4'-6"	(2) #3 REBAR	4'-5"
5'-10"	(2) #3 REBAR	5'-9"
6'-6"	(2) #3 REBAR	6'-6"
7'-6"	(2) #3 REBAR	7'-5"
9'-4"	(2) #3 REBAR	9'-3"
10'-6"	(2) #3 REBAR	10'-5"

6" PRECAST U-LINTEL DATA TABLE

LINTEL SIZE	VOLUME CY	WEIGHT LBS	" A " BOTTOM STEEL TYPE	LENGTH	" B " TOP STEEL TYPE	LENGTH	"C" SPACING	NO. OF STIRRUPS
3'-6"	0.026	104	#3 REBAR	3'-10"	7/32 BAR	3'-2"	N/A	4
4'-0"	0.030	119	#3 REBAR	4'-4"	7/32 BAR	3'-8"	N/A	4
4'-6"	0.033	133	#3 REBAR	4'-10"	7/32 BAR	4'-2"	N/A	4
5'-10"	0.043	173	#3 REBAR	6'-2"	7/32 BAR	5'-8"	N/A	4
6'-6"	0.048	193	#4 REBAR	6'-10"	7/32 BAR	6'-2"	N/A	4
7'-6"	0.055	222	#4 REBAR	7'-10"	7/32 BAR	7'-2"	2'-0"	6
9'-4"	0.069	277	#4 REBAR	9'-8"	#3 REBAR	9'-0"	2'-0"	6
10'-6"	0.076	312	#4 REBAR	10'-10"	#3 REBAR	10'-2"	2'-0"	6
11'-4"	0.083	336	#5 REBAR	11'-8"	#3 REBAR	11'-0"	3'-0"	6
12'-0"	0.087	354	#5 REBAR	12'-4"	#3 REBAR	13'-8"	3'-0"	6
13'-4"	0.098	395	#5 REBAR	13'-8"	#3 REBAR	13'-0"	4'-0"	6
14'-0"	0.102	413	#5 REBAR	14'-4"	#3 REBAR	13'-8"	4'-0"	6
17'-4"	0.127	514	#5 REBAR	17'-8"	#3 REBAR	17'-0"	4'-0"	6

12" PRECAST U-LINTEL DATA TABLE

LINTEL SIZE	VOLUME CY	WEIGHT LBS	" A " BOTTOM STEEL TYPE	LENGTH	" B " TOP STEEL TYPE	LENGTH	"C" SPACING	NO. OF STIRRUPS
3'-6"	0.037	153	#5 REBAR	3'-10"	7/32 BAR	3'-2"	N/A	4
4'-0"	0.043	175	#5 REBAR	4'-4"	7/32 BAR	3'-8"	N/A	4
4'-6"	0.049	197	#5 REBAR	4'-10"	7/32 BAR	4'-2"	N/A	4
5'-10"	0.063	255	#5 REBAR	6'-2"	7/32 BAR	5'-6"	N/A	4
6'-6"	0.070	284	#5 REBAR	6'-10"	7/32 BAR	6'-2"	N/A	4
7'-6"	0.081	328	#5 REBAR	7'-10"	7/32 BAR	7'-2"	2'-0"	6
9'-4"	0.101	408	#5 REBAR	9'-8"	#3 REBAR	9'-0"	2'-0"	6
10'-6"	0.113	459	#5 REBAR	10'-10"	#3 REBAR	10'-2"	2'-0"	6
11'-4"	0.122	495	#5 REBAR	11'-8"	#3 REBAR	11'-0"	3'-0"	6
12'-0"	0.130	525	#5 REBAR	12'-4"	#3 REBAR	11'-8"	3'-0"	6
13'-4"	0.143	582	#5 REBAR	13'-8"	#3 REBAR	13'-0"	4'-0"	6
14'-0"	0.151	612	#5 REBAR	14'-4"	#3 REBAR	13'-8"	4'-0"	6
17'-4"	0.187	758	#5 REBAR	17'-8"	#3 REBAR	17'-0"	3'-0"	8
19'-4"	0.208	845	#5 REBAR	19'-8"	#3 REBAR	19'-0"	3'-0"	8

12" PRECAST W/ 2" RECESS DOOR U-LINTEL DATA TABLE

DOOR SIZE	LINTEL LENGTH	RECESS LENGTH	VOLUME CY	WEIGHT LBS	" A " BOTTOM STEEL TYPE	LENGTH	" B " TOP STEEL TYPE	LENGTH	"C" SPACING	NO. OF STIRRUPS
2'-8"	4'-4"	3'-0"	0.047	189	#5 REBAR	4'-8"	7/32 BAR	4'-0"	N/A	4
3'-0"	4'-6"	3'-4"	0.047	192	#5 REBAR	4'-10"	7/32 BAR	4'-2"	N/A	4
4'-0"	5'-8"	4'-4"	0.056	241	#5 REBAR	6'-0"	7/32 BAR	5'-4"	N/A	4
4'-4"	5'-10"	4'-8"	0.060	243	#5 REBAR	6'-2"	7/32 BAR	5'-6"	N/A	4
5'-0"	6'-8"	5'-4"	0.069	280	#5 REBAR	7'-0"	7/32 BAR	6'-4"	N/A	4
6'-0"	7'-8"	6'-4"	0.076	308	#5 REBAR	7'-10"	7/32 BAR	7'-2"	2'-0"	6
8'-0"	9'-8"	8'-4"	0.098	397	#5 REBAR	10'-0"	#3 REBAR	9'-4"	2'-0"	6

THIS PROPRIETARY INFORMATION IS PROVIDED FOR PRODUCT APPROVAL. IT IS PROTECTED BY COPYRIGHT LAWS AND CANNOT BE REPRODUCED OR DISTRIBUTED WITHOUT THE PRIOR WRITTEN CONSENT OF FECP CORPORATION.

GENERAL NOTES:

1. REINFORCING STEEL: 7/32 BAR ASTM A510; #3, #4, AND #5 REBAR GRADE 60 ASTM A615
2. CONCRETE STRENGTHS: $f'c$ = 6000 PSI FOR ALL 6 INCH AND 12 INCH PRECAST LINTELS; $f'c$ = 3000 PSI FOR 4 INCH LINTELS
3. BOTTOM STEEL SHALL BE CUT BACK ONE INCH TO BE FLUSH WITH ENDS ON 6 AND 12 INCH LINTELS AFTER STRIPPING FROM FORM.
4. STRIPPING STRENGTH: 6 AND 12 INCH LINTELS = 2000 PSI
5. NOTE: THE TOTAL NUMBER OF STIRRUPS REQUIRED ARE COUNTED STARTING FROM EACH END OF THE REINFORCING CAGE; FOR EXAMPLE – NO. OF STIRRUPS = 4, THEN THE REINFORCING CAGE FABRICATION MODEL SHOWS 2 STIRRUPS FROM EACH END.

CRAIG PARRINO LICENSE No. 44756 STATE OF FLORIDA PROFESSIONAL ENGINEER

3-22-12

CRAIG PARRINO
6324 CR 579
SEFFNER, FL 33584
FL. P.E. LIC. NO. 44756

PRODUCT REVISED
as complying with the Florida Building Code
Acceptance No 12-0209.12
Expiration Date 09/11/2013
By
Miami Dade Product Control

NO.	BY	REVISION	DATE
1	JA	NAME CHANGE	3/11/08

MEMBER OF CMI NATIONAL CONCRETE MASONRY ASSOCIATION

CAST-CRETE CORPORATION
HIGH STRENGTH PRECAST AND PRESTRESSED CONCRETE LINTELS AND SILLS
P.O. Box 24567
Tampa, Florida 33623
Phone: 813-621-4841

TITLE: PRECAST AND PRESTRESSED LINTEL DETAILS

FILE NAME:	DBSUB4.DWG	DRAWN BY:	JOHAN ARNAUD	SCALE:	AS SHOWN
DATE:	3/24/03	CHECKED BY:	CRAIG PARRINO, P.E.	DRAWING: FD4612	SHEET: 1 OF 1

GENERAL NOTES

1) Materials:
   - f'c 4" precast lintel = 3000 psi
   - f'c 6" & 12" prescast lintel = 6000 psi
   - f'c grout = 3000 psi with maximum 3/8 inch aggregate
   - concrete masonry units (CMU) per ASTM C90 with minimum net area compressive strength = 1900 psi
   - rebar per ASTM A615 Grade 60
   - mortar per ASTM C270 type M or S

2) All safe load tables based on minimum 4 inch nominal bearing.
   Exception: Safe loads for lintel type 6U8, 12U8 and 12RU6 must be reduced by 20% if bearing length is less than 6 1/2 inches.

3) Provide full mortar bed and head joints.

4) The number in parenthesis indicates the percent reduction for grade 40 field added rebar.
   Example: 17'-4" Lintel 12F24-2B safe gravity load = 1428(14) w/ 14% reduction ⇒ 1428 (.86) = 1228 plf

5) All lintels meet or exceed L/360 deflection.
   Exception: Lintel types 6F8 & 12F8 17'-4" & longer meets or exceed L/180 deflection, Use is limited to conditions meeting the Florida Building Code Sections 1610 or 1612 as applicable

6) Shore filled lintels as required.

7) 4" solid lintels to be installed w/ 4" dimension horizontal and 8" dimension vertical.

8) Installation/attachment of lintel must comply with the architectural and/or structural documents.

9) The designer may evaluate concentrated loads from the safe load tables by calculating the maximum resisting moment and shear at d-away from the face of support.

10) N.R. = Not Rated

11) Bottom field added rebar to be located at the bottom of the lintel cavity.

12) 6" & 12" Lintels are manufactured with 5-1/2" long notches at the ends to accomodate vertical cell reinforcing and grouting.

13) The exterior surface of lintels installed in exterior concrete masonry walls shall have a coating of stucco applied in accordance with ASTM C-926 or other approved coating.

14) Lintels loaded simultaneously with vertical (gravity or uplift) and horizontal (lateral) loads should be checked for the combined loading with the following equation:

$$\frac{\text{Applied vertical load}}{\text{Safe vertical load}} + \frac{\text{Applied horizontal load}}{\text{Safe horizontal load}} \leq 1.0$$

15) For composite lintel heights not shown, use safe load from next lower height shown.

16) For lintel lengths not shown, use safe load from next longest length shown.

17) Safe loads are superimposed allowable loads.

18) Additional lateral load capacity can be obtained by the designer by providing additional reinforced concrete masonry above the lintel. See sketch below:

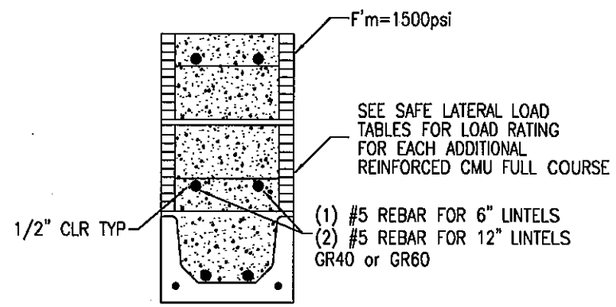

SAFE LOADS FOR 4" SOLID LINTELS

CAST-CRETE	GRAVITY
LENGTH / TYPE	4S8
3'-6" (42") PRECAST	1180
4'-0" (48") PRECAST	959
4'-6" (54") PRECAST	789
5'-10" (70") PRECAST	460
6'-6" (78") PRECAST	360
7'-6" (90") PRECAST	260
9'-4" (112") PRECAST	156
10'-6" (126") PRECAST	116

CAST-CRETE	UPLIFT	LATERAL
LENGTH / TYPE	4S8	4S8
3'-6" (42") PRECAST	687	371
4'-0" (48") PRECAST	597	320
4'-6" (54") PRECAST	529	258
5'-10" (70") PRECAST	407	148
6'-6" (78") PRECAST	366	118
7'-6" (90") PRECAST	280	87
9'-4" (112") PRECAST	187	55
10'-6" (126") PRECAST	152	43

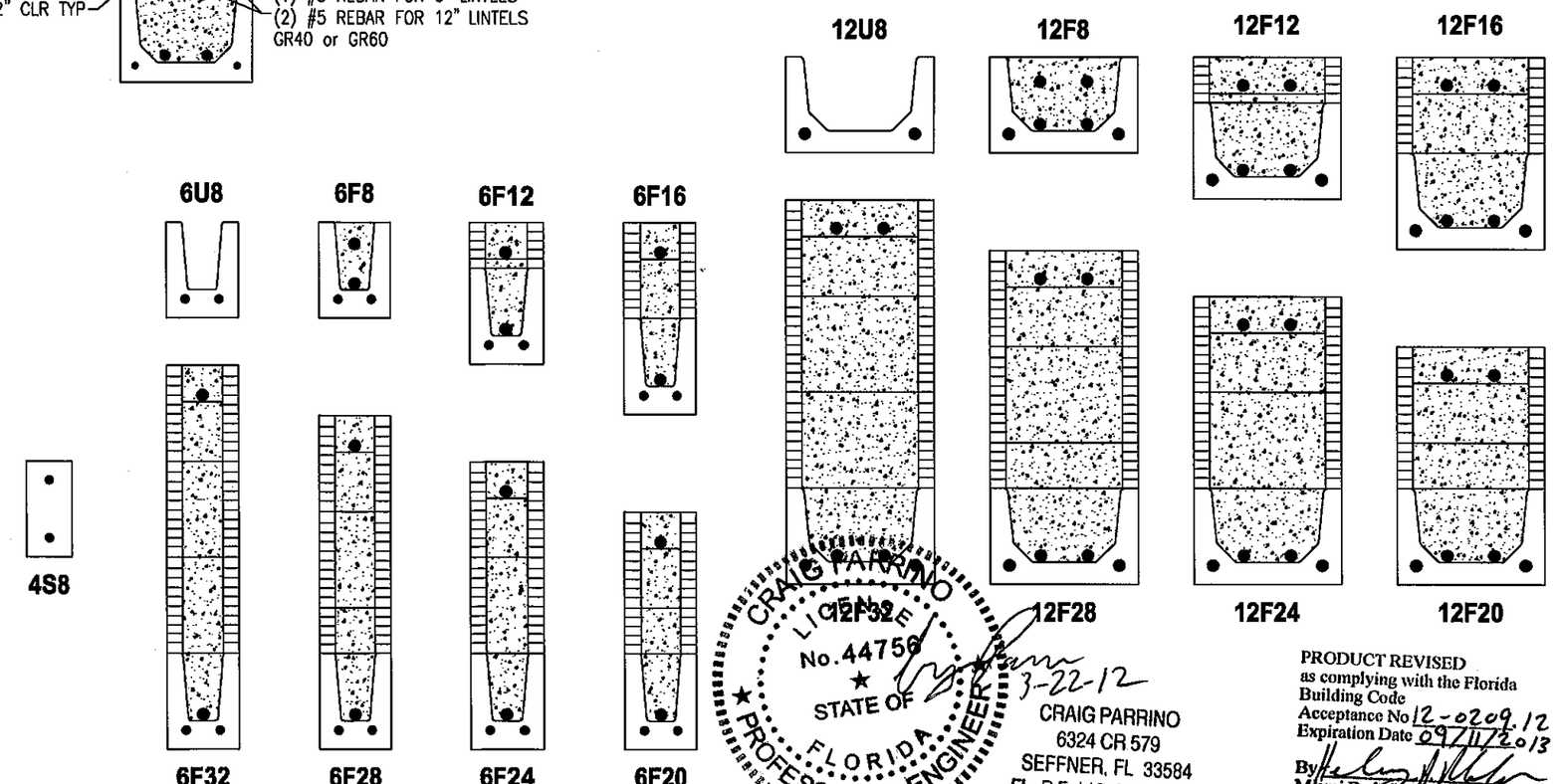

TYPE DESIGNATION

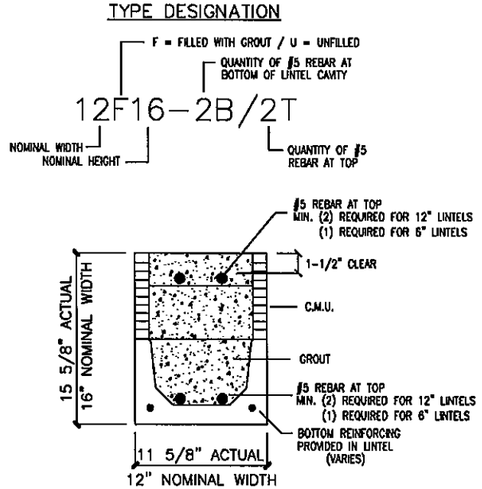

CRAIG PARRINO LICENSED No.44756 STATE OF FLORIDA PROFESSIONAL ENGINEER

3-22-12

CRAIG PARRINO
6324 CR 579
SEFFNER, FL 33584
FL. P.E. LIC. NO. 44756

PRODUCT REVISED
as complying with the Florida Building Code
Acceptance No 12-0209.12
Expiration Date 09/11/2013
By
Miami Dade Product Control

NO	BY	REVISION	DATE
1	JH	GENERAL REVISION	4/28/03
2	JA	NAME CHANGE	3/11/08

MEMBER OF NATIONAL CONCRETE MASONRY ASSOCIATION

CAST-CRETE CORPORATION
HIGH STRENGTH PRECAST AND PRESTRESSED CONCRETE LINTELS AND SILLS
P.O. Box 24067 Tampa, Florida 33623 Phone (813) 831-4443

TITLE: CAST-CRETE 4", 6" & 12" LINTEL SAFE LOAD TABLES

FILE NAME:	DBSUB5.DWG	DRAWN BY:	JOHAN ARNAUD	SCALE:	N.T.S.
DATE:	3/24/03	CHECKED BY:	CRAIG PARRINO, P.E. - REG. NO. 44756	DRAWING: NO.	LT4612 SHEET 1 OF 3

SAFE GRAVITY LOADS FOR 6" PRECAST U-LINTELS

CAST-CRETE	SAFE LOAD - POUNDS PER LINEAR FOOT							
LENGTH / TYPE	6U8	6F8-1B	6F12-1B	6F16-1B	6F20-1B	6F24-1B	6F28-1B	6F32-1B
3'-6" (42") PRECAST	2332	2676	3892	5050	6148	7227	8297	9357
4'-0" (48") PRECAST	2025	2313	3892	5050	6148	7227	8297	9357
4'-6" (54") PRECAST	1654	1887	3633	5050	6148	7227	8297	9357
5'-10" (70") PRECAST	1067	1260	2198	3557	5734	7227	8297 (31)	8225 (19)
6'-6" (78") PRECAST	949	1078	1831	2850	4328	6737	8297	9357
7'-6" (90") PRECAST	779	883	1459	2188	3151	4524	6654	9357 (11)
9'-4" (112") PRECAST	584	660	1056	1523	2084	2795	3731	5017
10'-6" (126") PRECAST	503	566	895	1270	1706	2236	2898	3747
11'-4" (136") PRECAST	457	513	805	1133	1507	1952	2492	3163
12'-0" (144") PRECAST	425	477	744	1042	1377	1769	2238	2808
13'-4" (160") PRECAST	373	417	646	895	1170	1485	1852	2285
14'-0" (168") PRECAST	351	392	605	835	1087	1373	1703	2087
17'-4" (208") PRECAST	N.R.	299	455	620	794	985	1198	1437

(#) THE NUMBERS IN PARENTHESIS ARE PERCENT REDUCTIONS FOR GR40 FIELD ADDED REBAR. SEE NOTE NO. 4

SAFE LATERAL LOADS FOR 6" PRECAST U-LINTELS

CAST-CRETE	SAFE LOAD PLF		
LENGTH / TYPE	6U8	6F8	REINF. CMU*
3'-6" (42") PRECAST	587	1055	587
4'-0" (48") PRECAST	487	787	438
4'-6" (54") PRECAST	416	609	339
5'-10" (70") PRECAST	300	350	195
6'-6" (78") PRECAST	263	496	155
7'-6" (90") PRECAST	222	367	115
9'-4" (112") PRECAST	173	352	73
10'-6" (126") PRECAST	151	276	57
11'-4" (136") PRECAST	139	311	49
12'-0" (144") PRECAST	131	277	43
13'-4" (160") PRECAST	117	223	35
14'-0" (168") PRECAST	111	202	32
17'-4" (208") PRESTRESSED	N.R.	130	20

* SEE NOTE 18

SAFE UPLIFT LOADS FOR 6" PRECAST U-LINTELS

CAST-CRETE	SAFE LOAD - POUNDS PER LINEAR FOOT						
LENGTH / TYPE	6F8-1T	6F12-1T	6F16-1T	6F20-1T	6F24-1T	6F28-1T	6F32-1T
3'-6" (42") PRECAST	1412	1860	2613	3366	4120	4873	5626
4'-0" (48") PRECAST	1225	1615	2269	2923	3576	4230	4883
4'-6" (54") PRECAST	1083	1430	2008	2585	3163	3741	4319
5'-10" (70") PRECAST	831	1100	1543	1987	2430	2874	3317
6'-6" (78") PRECAST	723	988	1385	1783	2181	2578	2976
7'-6" (90") PRECAST	648 (16)	850	1204	1550	1895	2240	2586
9'-4" (112") PRECAST	575	564	967 (5)	1257 (5)	1537 (8)	1816 (4)	2096 (3)
10'-6" (126") PRECAST	514	456	776 (5)	1125 (15)	1375 (14)	1625 (14)	1875 (13)
11'-4" (136") PRECAST	474	399	676 (5)	983 (15)	1210 (15)	1439 (15)	1669 (15)
12'-0" (144") PRECAST	454 (7)	362	611 (5)	885 (15)	1090 (15)	1296 (15)	1502 (15)
13'-4" (160") PRECAST	402 (13)	305	509 (5)	735 (15)	904 (15)	1074 (15)	1245 (15)
14'-0" (168") PRECAST	368 (13)	282	469 (5)	675 (14)	830 (14)	986 (15)	1143 (15)
17'-4" (208") PRECAST	253 (12)	205	334 (4)	475 (13)	583 (13)	692 (13)	801 (13)

(#) THE NUMBERS IN PARENTHESIS ARE PERCENT REDUCTIONS FOR GR40 FIELD ADDED REBAR. SEE NOTE NO. 4

CRAIG PARRINO LICENSE No. 44756 STATE OF FLORIDA PROFESSIONAL ENGINEER

3-22-12

CRAIG PARRINO
6324 CR 579
SEFFNER, FL 33584
FL. P.E. LIC. NO. 44756

PRODUCT REVISED
as complying with the Florida Building Code
Acceptance No. 12-0209.12
Expiration Date 09/11/2013
By
Miami Dade Product Control

SEE GENERAL NOTES – SHEET 1 OF 3

NO	BY	REVISION	DATE
1	JH	GENERAL REVISION	4/28/03
2	JA	NAME CHANGE	3/11/08

MEMBER OF NATIONAL CONCRETE MASONRY ASSOCIATION

CAST-CRETE CORPORATION
HIGH STRENGTH PRECAST AND PRESTRESSED CONCRETE LINTELS AND SILLS
P.O. Box 24697
Tampa, Florida 33623
Phone: 813-931-2452

TITLE: CAST-CRETE 4", 6" & 12" LINTEL SAFE LOAD TABLES

FILE NAME: DBSUB6.DWG	DRAWN BY: JOHAN ARNAUD	SCALE: N.T.S.
DATE: 3/24/03	CHECKED BY: CRAIG PARRINO, P.E. – REG. NO. 44756	DRAWING: NO. LT4612 SHEET 2 OF 3

SAFE GRAVITY LOADS FOR 12" PRECAST U-LINTELS

CAST-CRETE	SAFE LOAD - POUNDS PER LINEAR FOOT							
LENGTH / TYPE	12U8	12F8-2B	12F12-2B	12F16-2B	12F20-2B	12F24-2B	12F28-2B	12F32-2B
3'-6" (42") PRECAST	3428	5000	5838	7619	9352	11060	12755	14438
4'-0" (48") PRECAST	2923	4232	5838	7619	9352	11060	12755	14438
4'-6" (54") PRECAST	2396	3464	5304	7619	9352	11060	12755	14438
5'-10" (70") PRECAST	1612	2320	3218	5234	8487	11060	12755	14438 (11)
6'-6" (78") PRECAST	1383	1986	2679	4196	6421	10032	12755	14438 (30)
7'-6" (90") PRECAST	1138	1628	2131	3218	4676	6756	9763	13528 (46)
9'-4" (112") PRECAST	795	1216	1535	2230	3083	4167	5593	7552 (40)
10'-6" (126") PRECAST	614	1043	1295	1853	2516	3323	4334	5632 (38)
11'-4" (136") PRECAST	518	945	1162	1649	2216	2893	3719	4746 (38)
12'-0" (144") PRECAST	456	878	1073	1513	2020	2617	3333	4206 (39)
13'-4" (160") PRECAST	359	767 (8)	926	1294	1709	2188	2743	3409 (42)
14'-0" (168") PRECAST	321	720 (12)	865	1204	1584	2017	2451	3106 (43)
17'-4" (208") PRECAST	N.R.	451 (17)	631 (18)	881 (15)	1141 (14)	1428 (14)	1750 (16)	2102 (52)
19'-4" (232") PRECAST	N.R.	343 (17)	477 (19)	700 (19)	925 (20)	1152 (20)	1380 (20)	1609 (54)

(#) THE NUMBERS IN PARENTHESIS ARE PERCENT REDUCTIONS FOR GR40 FIELD ADDED REBAR. SEE NOTE NO. 4

SAFE LATERAL LOADS FOR 12" PRECAST U-LINTELS

CAST-CRETE	SAFE LOAD PLF		
LENGTH / TYPE	12U8	12F8	REINF. CMU*
3'-6" (42") PRECAST	1295	4841	3707
4'-0" (48") PRECAST	1295	4841	3412
4'-6" (54") PRECAST	1049	3922	2642
5'-10" (70") PRECAST	681	2547	1516
6'-6" (78") PRECAST	579	2167	1206
7'-6" (90") PRECAST	474	1771	893
9'-4" (112") PRECAST	355	1326	566
10'-6" (126") PRECAST	306	1143	444
11'-4" (136") PRECAST	278	1041	379
12'-0" (144") PRECAST	260	971	337
13'-4" (160") PRECAST	229	857	271
14'-0" (168") PRECAST	216	809	246
17'-4" (208") PRESTRESSED	N.R.	633 (12)	159
19'-4" (232") PRESTRESSED	N.R.	534 (12)	127

* SEE NOTE 18

SAFE UPLIFT LOADS FOR 12" PRECAST U-LINTELS

CAST-CRETE	SAFE LOAD - POUNDS PER LINEAR FOOT						
LENGTH / TYPE	12F8-2T	12F12-2T	12F16-2T	12F20-2T	12F24-1T	12F28-2T	12F32-2T
3'-6" (42") PRECAST	2752	3849	5408	6967	8526	10084	11643
4'-0" (48") PRECAST	2389	3343	4696	6048	7401	8753	10106
4'-6" (54") PRECAST	2113	2959	4154	5350	6546	7741	8937
5'-10" (70") PRECAST	1623	2275	3192	4109	5026	5943	6860
6'-6" (78") PRECAST	1444	2044	2867	3689	4512	5335	6158
7'-6" (90") PRECAST	1267 (14)	1743	2492	3207	3921	4636	5350
9'-4" (112") PRECAST	1028 (9)	1156	1980 (7)	2600 (8)	3179 (7)	3757 (7)	4335 (6)
10'-6" (126") PRECAST	920 (18)	935	1591 (7)	2276 (15)	2804 (15)	3335 (16)	3867 (16)
11'-4" (136") PRECAST	858 (24)	819	1386 (7)	1978 (15)	2436 (15)	2896 (15)	3357 (15)
12'-0" (144") PRECAST	814 (27)	744	1253 (7)	1784 (15)	2196 (15)	2610 (15)	3025 (15)
13'-4" (160") PRECAST	678 (27)	626	1045 (6)	1482 (15)	1822 (15)	2165 (15)	2508 (15)
14'-0" (168") PRECAST	622 (27)	579	963 (6)	1362 (14)	1675 (14)	1989 (14)	2304 (14)
17'-4" (208") PRECAST	434 (25)	423	687 (6)	962 (13)	1180 (13)	1400 (13)	1619 (13)
19'-4" (232") PRECAST	366 (23)	366	587 (5)	816 (12)	1000 (12)	1185 (12)	1370 (12)

(#) THE NUMBERS IN PARENTHESIS ARE PERCENT REDUCTIONS FOR GR40 FIELD ADDED REBAR. SEE NOTE NO. 4

SAFE GRAVITY LOADS FOR 12" PRECAST w/ 2" RECESS DOOR U-LINTELS

CAST-CRETE	SAFE LOAD - POUNDS PER LINEAR FOOT							
LENGTH / TYPE	12RU6	12RF6-2B	12RF10-2B	12RF14-2B	12RF18-2B	12RF22-2B	12RF26-2B	12RF30-2B
4'-4" (52") PRECAST	2538	2942	5468	7584	9640	11669	13679	15679
4'-6" (54") PRECAST	2319	2740	5468	7584	9640	11669	13679	15679
5'-8" (68") PRECAST	1347	1841	3555	6395	9640	11669	13679	15679 (24)
5'-10" (70") PRECAST	1259	1758	3361	5954	9358	11669	13679	15679 (29)
6'-8" (80") PRECAST	924	1430	2633	4415	6884	10353 (16)	12573 (16)	14800 (45)
7'-6" (90") PRECAST	703	1203	2157	3494	5259	7922 (16)	9623 (17)	11329 (46)
9'-8" (116") PRECAST	389	843	1451 (5)	2157	3203 (9)	4427 (16)	5417 (17)	6380 (47)

(#) THE NUMBERS IN PARENTHESIS ARE PERCENT REDUCTIONS FOR GR40 FIELD ADDED REBAR. SEE NOTE NO. 4

SAFE LATERAL LOADS FOR 12" PRECAST w/ 2" RECESS DOOR U-LINTELS

CAST-CRETE	SAFE LOAD PLF		
LENGTH / TYPE	12RU6	12RF6	REINF. CMU*
4'-4" (52") PRECAST	1295	3692	3412
4'-6" (54") PRECAST	1213	3458	3122
5'-8" (68") PRECAST	784	2236	1835
5'-10" (70") PRECAST	747	2129	1718
6'-8" (80") PRECAST	602	1716	1274
7'-6" (90") PRECAST	504	1438	982
9'-8" (116") PRECAST	355	1011	566

* SEE NOTE 18

SAFE UPLIFT LOADS FOR 12" PRECAST w/ 2" RECESS DOOR U-LINTELS

CAST-CRETE	SAFE LOAD - POUNDS PER LINEAR FOOT						
LENGTH / TYPE	12RF6-2T	12RF10-2T	12RF14-2T	12RF18-2T	12RF22-2T	12RF26-2T	12RF30-2T
4'-4" (52") PRECAST	1626	2668	4022	5377	6731	8086	9440
4'-6" (54") PRECAST	1558	2557	3855	5152	6450	7748	9045
5'-8" (68") PRECAST	1210	1987	2994	4000	5006	6012	7018
5'-10" (70") PRECAST	1173	1927	2902	3877	4853	5828	6803
6'-8" (80") PRECAST	1020 (4)	1676	2522	3368	4215	5061	5908
7'-6" (90") PRECAST	904 (15)	1319	2234	2983	3732	4482	5231
9'-8" (116") PRECAST	703 (14)	810	1550	2316 (8)	2897 (8)	3477 (7)	4057 (6)

(#) THE NUMBERS IN PARENTHESIS ARE PERCENT REDUCTIONS FOR GR40 FIELD ADDED REBAR. SEE NOTE NO. 4

CRAIG PARRINO LICENSE No. 44756 STATE OF FLORIDA PROFESSIONAL ENGINEER

3-22-12

CRAIG PARRINO
6324 CR 579
SEFFNER, FL 33584
FL. P.E. LIC. NO. 44756

PRODUCT REVISED
as complying with the Florida Building Code
Acceptance No 12-0209.12
Expiration Date 09/11/2013
By
Miami Dade Product Control

SEE GENERAL NOTES – SHEET 1 OF 3

NO	BY	REVISION	DATE
1	JH	GENERAL REVISION	4/28/03
2	JA	NAME CHANGE	3/11/08

MEMBER OF CRSI NATIONAL CONCRETE MASONRY ASSOCIATION

CAST-CRETE CORPORATION
HIGH STRENGTH PRECAST AND PRESTRESSED CONCRETE LINTELS AND SILLS
P.O. Box 24587
Tampa, Florida 33623
Phone: 813-931-4651

TITLE: CAST-CRETE 4", 6" & 12" LINTEL SAFE LOAD TABLES

FILE NAME: DBSU87.DWG	DRAWN BY: JOHAN ARNAUD	SCALE: N.T.S.			
DATE: 3/24/03	CHECKED BY: CRAIG PARRINO, P.E. - REG. NO. 44756	DRAWING: NO. LT4612	SHEET 3 OF 3		