MIAMI-DADE COUNTY
DEPARTMENT OF PERMITTING, ENVIRONMENT, AND REGULATORY AFFAIRS (PERA)
BOARD AND CODE ADMINISTRATION DIVISION

NOTICE OF ACCEPTANCE (NOA)

MIAMI-DADE COUNTY
PRODUCT CONTROL SECTION
11805 SW 26 Street, Room 208
Miami, Florida 33175-2474
T (786) 315-2590 F (786) 315-2599
www.miamidade.gov/pera/

T. M. Windows, LLC.
601 N.W. 12th Ave.
Pompano Beach, FL 33069

SCOPE:

This NOA is being issued under the applicable rules and regulations governing the use of construction materials. The documentation submitted has been reviewed and accepted by Miami-Dade County PERA -Product Control Section to be used in Miami Dade County and other areas where allowed by the Authority Having Jurisdiction (AHJ).

This NOA shall not be valid after the expiration date stated below. The Miami-Dade County Product Control Section (In Miami Dade County) and/or the AHJ (in areas other than Miami Dade County) reserve the right to have this product or material tested for quality assurance purposes. If this product or material fails to perform in the accepted manner, the manufacturer will incur the expense of such testing and the AHJ may immediately revoke, modify, or suspend the use of such product or material within their jurisdiction. PERA reserves the right to revoke this acceptance, if it is determined by Miami-Dade County Product Control Section that this product or material fails to meet the requirements of the applicable building code.

This product is approved as described herein, and has been designed to comply with the Florida Building Code, including the High Velocity Hurricane Zone.

DESCRIPTION: Series "605 " Single Hung Aluminum Window (reinforced)

APPROVAL DOCUMENT: Drawing No. **W06-34 Rev E.**, titled "Series 605 Aluminum Single Hung WDW.(LMI) ", sheets 1 through 7 of 7, prepared by Al-Farooq Corp., dated 04-24-06 and last revised on APR 25, 2012, signed and sealed by Javad Ahmad, P.E., bearing the Miami-Dade County Product Control Revision stamp with the Notice of Acceptance number and expiration date by the Miami-Dade County Product Control Section.

MISSILE IMPACT RATING: Large and Small Missile Impact Resistant

Limitation:

1. Exception: Glass **type I** (sheet 4) is **not** approved for Small Missile Impact Rating & shall **not** be installed above 30' above the grade.
2. See Design Pressure Ratings size VS glass type and reinforcement type in sheet **2**. All United installed with optional **Fin**-mount are limited to max Dp = +/- **61.0 psf**.

LABELING: Each unit shall bear a permanent label with the manufacturer's name or logo, city, state and series and following statement: "Miami-Dade County Product Control Approved", noted herein.

RENEWAL of this NOA shall be considered after a renewal application has been filed and there has been no change in the applicable building code negatively affecting the performance of this product.

TERMINATION of this NOA will occur after the expiration date or if there has been a revision or change in the materials, use, and/or manufacture of the product or process. Misuse of this NOA as an endorsement of any product, for sales, advertising or any other purposes shall automatically terminate this NOA. Failure to comply with any section of this NOA shall be cause for termination and removal of NOA.

ADVERTISEMENT: The NOA number preceded by the words Miami-Dade County, Florida, and followed by the expiration date may be displayed in advertising literature. If any portion of the NOA is displayed, then it shall be done in its entirety.

INSPECTION: A copy of this entire NOA shall be provided to the user by the manufacturer or its distributors and shall be available for inspection at the job site at the request of the Building Official.

This NOA **revises & renews NOA # 09-0604.24** and consists of this page 1 and evidence pages E-1, as well as approval document mentioned above.

The submitted documentation was reviewed by **Ishaq I. Chanda, P.E.**

MIAMI-DADE COUNTY APPROVED

4/26/12

NOTICE OF ACCEPTANCE: EVIDENCE SUBMITTED

A. DRAWINGS

1. Manufacturer's die drawings and sections (transferred from file # **09-0604.24**)
2. Drawing No. **W06-34 Rev E.**, titled "Series 605 Aluminum Single Hung WDW.(LMI) ", sheets 1 through 7 of 7, prepared by Al-Farooq Corp., dated 04-24-06 and last revised on APR 25, 2012, signed and sealed by Javad Ahmad, P.E.

B. TESTS (transferred from file # **09-0604.24**)

1. Test report on 1) Air Infiltration Test, per TAS 202-94
   2) Uniform Static Air Pressure Test, Loading per TAS 202-94
   3) Large Missile Impact Test, TAS 201-94
   4) Cyclic Loading Test, per TAS 203-94

   along with installation diagram of an aluminum Single Hung window, prepared by Fenestration Testing Laboratory Inc., Test Report No. **FTL-5439** dated 12-10-07 and **FTL-5742** dated 01-22-09, both signed and sealed by Michael S. Wenzel, P.E.
2. Test report on (Transferred from file # **07-0404.04**)
   1) Air Infiltration Test, per TAS 202-94
   2) Uniform Static Air Pressure Test, Loading per TAS 202-94
   3) Water Resistance Test, per TAS 202-94
   4) Large Missile Impact Test, TAS 201-94
   5) Cyclic Loading Test, per TAS 203-94

   along with installation diagram of an alum Single Hung window, prepared by Fenestration Testing Lab Inc., Test Report No. **FTL-3975** dated 10-22-03, **FTL-3755** dated 03-24-03 and **FTL-4514** dated 01-25-05, all signed and sealed by Edmundo Largaespada, P.E.
3. Additional test report No. **CTLA-416W** dated 04-11-00 issued by Certified Testing lab w/ addendum letter Jan 22, 2002, signed and sealed by Ramesh Patel, P.E.

C. CALCULATIONS

1. Anchor Verification calculations complying w/ FBC 2010, prepared by AL-Farooq Corp. , dated JAN 18, 2012, signed &sealed by Javad Ahmad, P.E.
2. Anchor Verification Calculations & comparative analysis complying w/ FBC 2007, prepared by AL-Farooq Corp. , dtd 05-15-09, signed &sealed by Arshad Viqar, P.E. (file#**09-0604.24**).
3. Glazing complies w/ ASTME-1300-02 & -04.

D. QUALITY ASSURANCE

1. Miami Dade Department of Permitting, Environment, and Regulatory Affairs (PERA).

E. MATERIAL CERTIFICATIONS

1. Notice of Acceptance No. **11-0325.05** issued to Solutia Inc. for their "**Saflex Clear or colored interlayer**", expiring on 05/21/16.
2. Notice of Acceptance No.**12-0130.01**, issued to Cytec Industries Inc. for "Uvekol S laminated glass interlayer ", expiring on 02/08/2014.

F. STATEMENTS

1. Statement letter of conformance FBC 2010 and letter of no financial interest, prepared by Al-Farooq Corporation, 01/13/12, signed and sealed by Javad Ahmad, P.E.
2. Statement letter of conformance FBC 2007 and letter of no financial interest, prepared by Al-Farooq Corporation, dated 05/28/9, signed and sealed by Arshad Viqar, P.E. (file # **09-0604.24)**
3. Lab compliance as part of the above referenced test report.

G. OTHER

1. This NOA **revises & renews** NOA # **09-0604.24**, expiring on April 21, 2016.
2. Test proposal # 07-3765 approved by BCCO dated Feb. 06, 2007.

Ishaq I. Chanda

Ishaq I. Chanda, P.E.
Product Control Examiner
NOA No 12-0213.05
Expiration Date: July 05, 2017
Approval Date: May 03, 2012

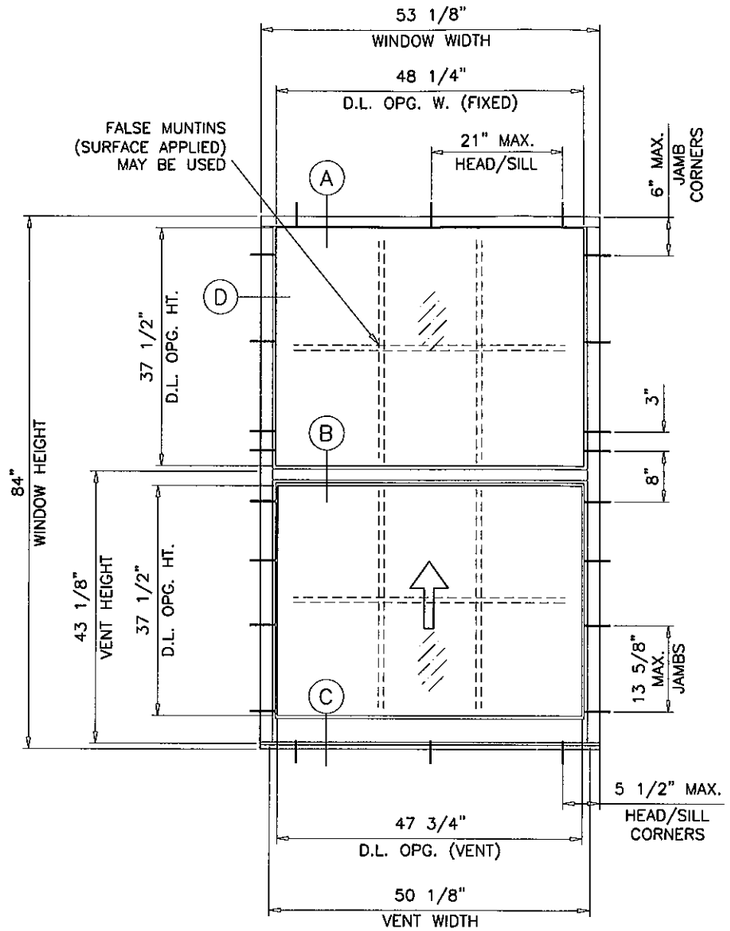

TYPICAL ELEVATION
EQUAL LITES
(SEE DESIGN CAPACITY CHART)

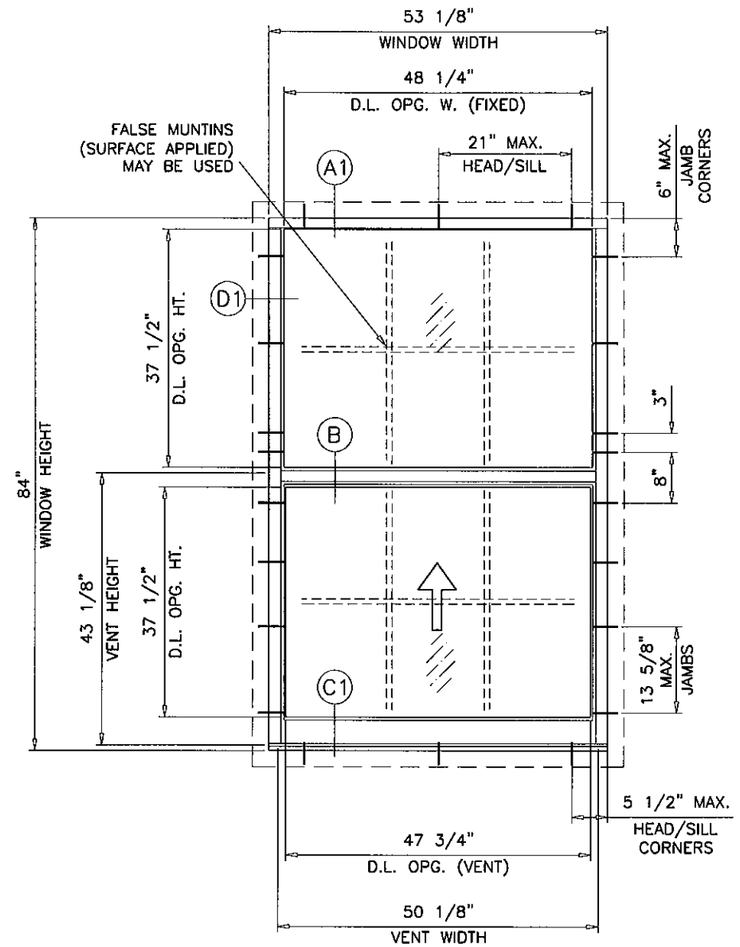

TYPICAL ELEVATION
WITH OPTIONAL FIN
EQUAL LITES
(LIMIT DESIGN CAPACITY TO ±61.0 PSF MAX.)

THESE WINDOWS ARE RATED FOR LARGE & SMALL MISSILE IMPACT.
SHUTTERS ARE NOT REQUIRED.

SERIES 605 ALUMINUM SINGLE HUNG WINDOW

DESIGN LOAD RATINGS FOR THESE WINDOWS TO BE AS PER CHARTS SHOWN ON SHEET 2.

APPROVAL APPLIES TO SINGLE UNITS OR SIDE BY SIDE COMBINATIONS OF S.H./S.H. OR SINGLE HUNG WITH OTHER WINDOW TYPES IN MODULES OF TWO OR MORE WINDOWS USING MIAMI-DADE COUNTY APPROVED MULLIONS IN BETWEEN. LOWER DESIGN PRESSURE FROM WINDOWS OR MULLION APPROVAL WILL APPLY TO ENTIRE SYSTEM.

THIS PRODUCT HAS BEEN DESIGNED AND TESTED TO COMPLY WITH THE REQUIREMENTS OF THE FLORIDA BUILDING CODE INCLUDING HIGH VELOCITY HURRICANE ZONE (HVHZ).

1BY OR 2BY WOOD BUCKS BY OTHERS, MUST BE ANCHORED PROPERLY TO TRANSFER LOADS TO THE STRUCTURE.

ANCHORS SHALL BE AS LISTED, SPACED AS SHOWN ON DETAILS, ANCHORS EMBEDMENT TO BASE MATERIAL SHALL BE BEYOND WALL DRESSING OR STUCCO.

ANCHORING OR LOADING CONDITIONS NOT SHOWN IN THESE DETAILS ARE NOT PART OF THIS APPROVAL.

A LOAD DURATION INCREASE IS USED IN DESIGN OF ANCHORS INTO WOOD ONLY.

MATERIALS INCLUDING BUT NOT LIMITED TO STEEL/METAL SCREWS, THAT COME INTO CONTACT WITH OTHER DISSIMILAR MATERIALS SHALL MEET THE REQUIREMENTS OF THE FLORIDA BLDG. CODE SECTION 2003.8.4.

D.L.O. WIDTH (FIXED) = WINDOW WIDTH − 4.875"
D.L.O. WIDTH (VENT) = WINDOW WIDTH − 5.375"
D.L.O. HEIGHT = WINDOW HEIGHT/2 − 4.5"

LAMINATED GLASS
INSUL. LAM. GLASS
LARGE MISSILE IMPACT

PRODUCT REVISED
in complying with the Florida
Building Code
Acceptance No. 12-0213.05
Expiration Date JULY 05, 2017
By Chag I. Chanda
Special Date Product Control

Engr: JAVAD AHMAD
CIVIL
FLA. PE # 70592
C.A.N. 3538

APR 25 2012

AL-FAROOQ CORPORATION
ENGINEERS & PRODUCT DEVELOPMENT
1235 S.W. 87 AVE
MIAMI, FLORIDA 33174
TEL (305) 264-8100 FAX. (305) 262-6978
COMP-ANL\W06-34TMW

SERIES 605 ALUMINUM SINGLE HUNG WDW. (L.M.I.)

T.M. WINDOWS LLC.
601 N.W. 12TH AVE.
POMPANO BEACH, FL. 33069
TEL. (954) 781-4430 FAX. (954) 781-5078

revisions:

no	date	by	description
B	11.06.06		REV. PER BCCO COMMENTS
C	01.10.08		GLASS & REINF. OPTIONS ADD.
D	05.12.09		UPDATED FOR 2007 FBC
E	01.16.12		UPDATED TO 2010 FBC

date: 04-24-06
scale: 1/2"=1'-0"
dr. by: HAMID
chk. by:

drawing no.
W06-34

sheet 1 of 7

DESIGN LOAD CAPACITY – PSF
(WITH ALUMINUM REINFORCING)

WINDOW DIMS.		GLASS TYPE 'C'		GLASS TYPES 'D' & 'E'		GLASS TYPE 'F'		GLASS TYPE 'G'		GLASS TYPE 'H'		GLASS TYPE 'I'		GLASS TYPE 'J'	
WIDTH	HEIGHT	EXT.(+)	INT.(–)	EXT.(+)	INT.(–)	EXT.(+)	INT.(–)	EXT.(+)	INT.(–)	EXT.(+)	INT.(–)	EXT.(+)	INT.(–)	EXT.(+)	INT.(–)
19–1/8"	26" (4)	70.0	70.0	61.0	61.0	80.0	80.0	80.0	80.0	80.0	80.0	80.0	80.0	80.0	80.0
26–1/2"		70.0	70.0	61.0	61.0	80.0	80.0	80.0	80.0	80.0	80.0	80.0	80.0	80.0	80.0
37"		70.0	70.0	61.0	61.0	80.0	80.0	80.0	80.0	80.0	80.0	80.0	80.0	80.0	80.0
53–1/8"		70.0	70.0	61.0	61.0	80.0	80.0	80.0	80.0	80.0	80.0	80.0	80.0	80.0	80.0
19–1/8"	38–3/8" (4)	70.0	70.0	61.0	61.0	80.0	80.0	80.0	80.0	80.0	80.0	80.0	80.0	80.0	80.0
26–1/2"		70.0	70.0	61.0	61.0	80.0	80.0	80.0	80.0	80.0	80.0	80.0	80.0	80.0	80.0
37"		70.0	70.0	61.0	61.0	80.0	80.0	80.0	80.0	80.0	80.0	80.0	80.0	80.0	80.0
53–1/8"		70.0	70.0	61.0	61.0	80.0	80.0	80.0	80.0	80.0	80.0	80.0	80.0	80.0	80.0
19–1/8"	50–5/8" (5)	70.0	70.0	61.0	61.0	80.0	80.0	80.0	80.0	80.0	80.0	80.0	80.0	80.0	80.0
26–1/2"		70.0	70.0	61.0	61.0	80.0	80.0	80.0	80.0	80.0	80.0	80.0	80.0	80.0	80.0
37"		70.0	70.0	61.0	61.0	80.0	80.0	80.0	80.0	80.0	80.0	80.0	80.0	80.0	80.0
53–1/8"		70.0	70.0	61.0	61.0	80.0	80.0	80.0	80.0	80.0	80.0	80.0	80.0	80.0	80.0
19–1/8"	56–5/8" (6)	70.0	70.0	61.0	61.0	80.0	80.0	80.0	80.0	80.0	80.0	80.0	80.0	80.0	80.0
26–1/2"		70.0	70.0	61.0	61.0	80.0	80.0	80.0	80.0	80.0	80.0	80.0	80.0	80.0	80.0
37"		70.0	70.0	61.0	61.0	80.0	80.0	80.0	80.0	80.0	80.0	80.0	80.0	80.0	80.0
53–1/8"		70.0	70.0	61.0	61.0	80.0	80.0	80.0	80.0	80.0	80.0	80.0	80.0	80.0	80.0
19–1/8"	63" (6)	70.0	70.0	61.0	61.0	80.0	80.0	80.0	80.0	80.0	80.0	80.0	80.0	80.0	80.0
26–1/2"		70.0	70.0	61.0	61.0	80.0	80.0	80.0	80.0	80.0	80.0	80.0	80.0	80.0	80.0
37"		70.0	70.0	61.0	61.0	80.0	80.0	80.0	80.0	80.0	80.0	80.0	80.0	80.0	80.0
53–1/8"		70.0	70.0	61.0	61.0	80.0	80.0	80.0	80.0	80.0	80.0	80.0	80.0	80.0	80.0
19–1/8"	72" (7)	70.0	70.0	61.0	61.0	80.0	80.0	80.0	80.0	80.0	80.0	80.0	80.0	80.0	80.0
26–1/2"		70.0	70.0	61.0	61.0	80.0	80.0	80.0	80.0	80.0	80.0	80.0	80.0	80.0	80.0
37"		70.0	70.0	61.0	61.0	80.0	80.0	80.0	80.0	80.0	80.0	80.0	80.0	80.0	80.0
53–1/8"		–	–	61.0	61.0	–	–	80.0	80.0	80.0	80.0	78.2	78.2	80.0	80.0
19–1/8"	76–3/4" (7)	70.0	70.0	61.0	61.0	80.0	80.0	80.0	80.0	80.0	80.0	80.0	80.0	80.0	80.0
26–1/2"		70.0	70.0	61.0	61.0	80.0	80.0	80.0	80.0	80.0	80.0	80.0	80.0	80.0	80.0
37"		70.0	70.0	61.0	61.0	80.0	80.0	80.0	80.0	80.0	80.0	80.0	80.0	80.0	80.0
53–1/8"		–	–	61.0	61.0	–	–	77.6	77.6	80.0	80.0	74.5	74.5	80.0	80.0
24"	48" (5)	70.0	70.0	61.0	61.0	80.0	80.0	80.0	80.0	80.0	80.0	80.0	80.0	80.0	80.0
30"		70.0	70.0	61.0	61.0	80.0	80.0	80.0	80.0	80.0	80.0	80.0	80.0	80.0	80.0
36"		70.0	70.0	61.0	61.0	80.0	80.0	80.0	80.0	80.0	80.0	80.0	80.0	80.0	80.0
42"		70.0	70.0	61.0	61.0	80.0	80.0	80.0	80.0	80.0	80.0	80.0	80.0	80.0	80.0
48"		70.0	70.0	61.0	61.0	80.0	80.0	80.0	80.0	80.0	80.0	80.0	80.0	80.0	80.0
54"		70.0	70.0	61.0	61.0	80.0	80.0	80.0	80.0	80.0	80.0	80.0	80.0	80.0	80.0
24"	60" (6)	70.0	70.0	61.0	61.0	80.0	80.0	80.0	80.0	80.0	80.0	80.0	80.0	80.0	80.0
30"		70.0	70.0	61.0	61.0	80.0	80.0	80.0	80.0	80.0	80.0	80.0	80.0	80.0	80.0
36"		70.0	70.0	61.0	61.0	80.0	80.0	80.0	80.0	80.0	80.0	80.0	80.0	80.0	80.0
42"		70.0	70.0	61.0	61.0	80.0	80.0	80.0	80.0	80.0	80.0	80.0	80.0	80.0	80.0
48"		70.0	70.0	61.0	61.0	80.0	80.0	80.0	80.0	80.0	80.0	80.0	80.0	80.0	80.0
54"		70.0	70.0	61.0	61.0	80.0	80.0	80.0	80.0	80.0	80.0	80.0	80.0	80.0	80.0
24"	72" (7)	70.0	70.0	61.0	61.0	80.0	80.0	80.0	80.0	80.0	80.0	80.0	80.0	80.0	80.0
30"		70.0	70.0	61.0	61.0	80.0	80.0	80.0	80.0	80.0	80.0	80.0	80.0	80.0	80.0
36"		70.0	70.0	61.0	61.0	80.0	80.0	80.0	80.0	80.0	80.0	80.0	80.0	80.0	80.0
42"		70.0	70.0	61.0	61.0	80.0	80.0	80.0	80.0	80.0	80.0	80.0	80.0	80.0	80.0
48"		–	–	61.0	61.0	–	–	80.0	80.0	80.0	80.0	80.0	80.0	80.0	80.0
54"		–	–	61.0	61.0	–	–	79.1	79.1	79.1	79.1	76.8	76.8	78.4	78.4
24"	84" (8)	70.0	70.0	61.0	61.0	80.0	80.0	80.0	80.0	80.0	80.0	80.0	80.0	80.0	80.0
30"		70.0	70.0	61.0	61.0	80.0	80.0	80.0	80.0	80.0	80.0	80.0	80.0	80.0	80.0
36"		–	–	61.0	61.0	–	–	80.0	80.0	80.0	80.0	80.0	80.0	80.0	80.0
42"		–	–	61.0	61.0	–	–	80.0	80.0	80.0	80.0	80.0	80.0	80.0	80.0
48"		–	–	61.0	61.0	–	–	80.0	80.0	80.0	80.0	77.5	77.5	80.0	80.0

( ) NO. IN PARENTHESIS INDICATE NO. OF ANCHORS PER JAMB

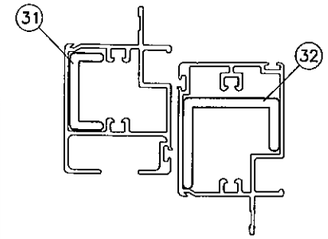

DESIGN LOAD CAPACITY – PSF
(WITH STEEL REINFORCING)

WINDOW DIMS.		GLASS TYPE 'F'	
WIDTH	HEIGHT	EXT.(+)	INT.(–)
19–1/8"	26" (4)	80.0	115.0
26–1/2"		80.0	115.0
37"		80.0	115.0
53–1/8"		80.0	115.0
19–1/8"	38–3/8" (4)	80.0	115.0
26–1/2"		80.0	115.0
37"		80.0	115.0
53–1/8"		80.0	115.0
19–1/8"	50–5/8" (5)	80.0	115.0
26–1/2"		80.0	115.0
37"		80.0	115.0
53–1/8"		80.0	115.0
19–1/8"	56–5/8" (6)	80.0	115.0
26–1/2"		80.0	115.0
37"		80.0	115.0
53–1/8"		80.0	115.0
19–1/8"	63" (6)	80.0	115.0
26–1/2"		80.0	115.0
37"		80.0	115.0
53–1/8"		80.0	115.0
19–1/8"	72" (7)	80.0	115.0
26–1/2"		80.0	115.0
37"		80.0	115.0
19–1/8"	76–3/4" (7)	80.0	115.0
26–1/2"		80.0	115.0
37"		80.0	115.0
24"	48" (5)	80.0	115.0
30"		80.0	115.0
36"		80.0	115.0
42"		80.0	115.0
48"		80.0	115.0
54"		80.0	115.0
24"	60" (6)	80.0	115.0
30"		80.0	115.0
36"		80.0	115.0
42"		80.0	115.0
48"		80.0	115.0
54"		80.0	115.0
24"	72" (7)	80.0	115.0
30"		80.0	115.0
36"		80.0	115.0
42"		80.0	115.0
24"	84" (8)	80.0	115.0
30"		80.0	115.0

( ) NO. IN PARENTHESIS INDICATE NO. OF ANCHORS PER JAMB

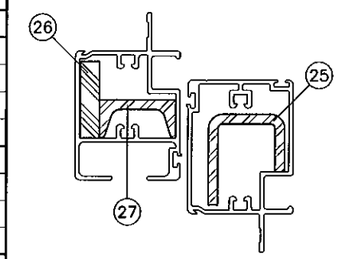

PRODUCT REVISED
In complying with the Florida Building Code
Acceptance No 12-02/3.05
Expiration Date 7/5/17
By Ishaq I. Llanda
Miami Dade Product Control

NOTE:
GLASS CAPACITIES ON THIS SHEET ARE BASED ON ASTM E1300–04 (3 SEC. GUSTS) AND FLORIDA BUILDING COMMISSION DECLARATORY STATEMENT DCA05–DEC–219

Engr: JAVAD AHMAD
CIVIL
FLA. PE # 70592
C.A.N. 3538

APR 25 2012

AL-FAROOQ CORPORATION
ENGINEERS & PRODUCT DEVELOPMENT
1235 S.W. 87 AVE
MIAMI, FLORIDA 33174
TEL. (305) 264-8100 FAX. (305) 262-6978
COMP–ANL\W06–34TMW

SERIES 605 ALUMINUM SINGLE HUNG WDW. (L.M.I.)

T.M. WINDOWS LLC.
601 N.W. 12TH AVE.
POMPANO BEACH, FL. 33069
TEL. (954) 781–4430 FAX. (954) 781–5078

revisions:

no	date	by	description
B	11.06.06		NO CHANGE THIS SHEET
C	01.10.08		GLASS & REINF. OPTIONS ADD.
D	05.12.09		UPDATED FOR 2007 FBC
E	01.16.12		GLASS TYPE B REMOVED

date: 04–24–06
scale: 1/2" = 1"
dr. by: HAMID
chk. by:

drawing no.
W06–34

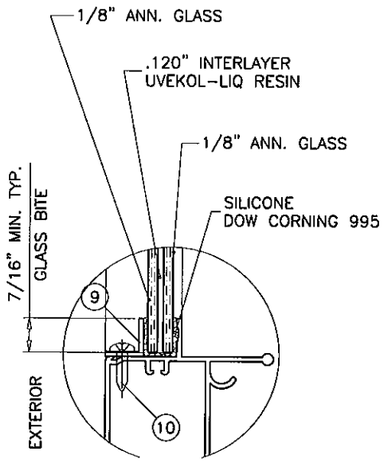

GLASS TYPE 'C'

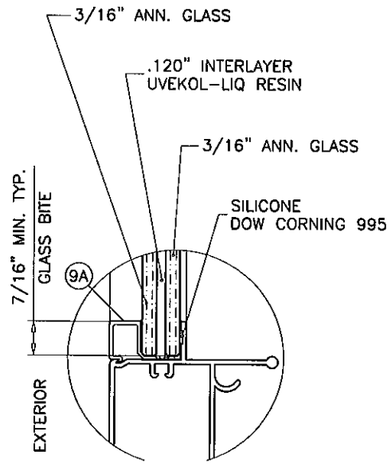

GLASS TYPE 'D'

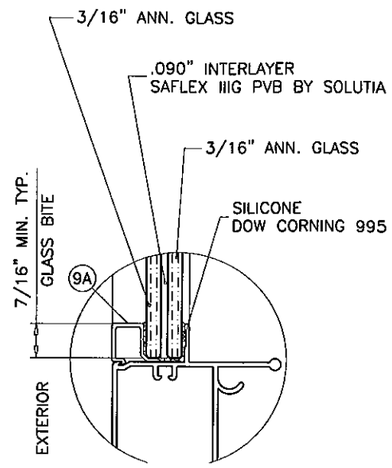

GLASS TYPE 'E'

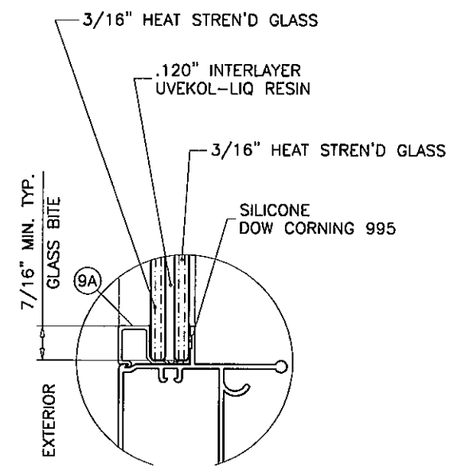

GLASS TYPE 'F'

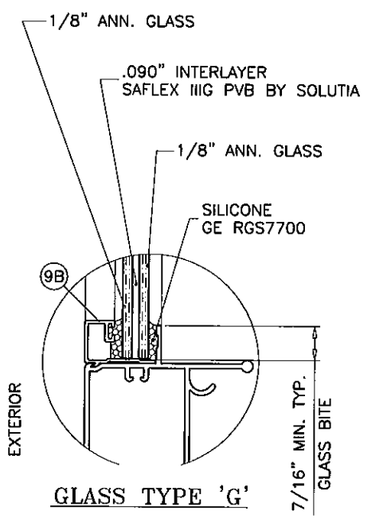

GLASS TYPE 'G'

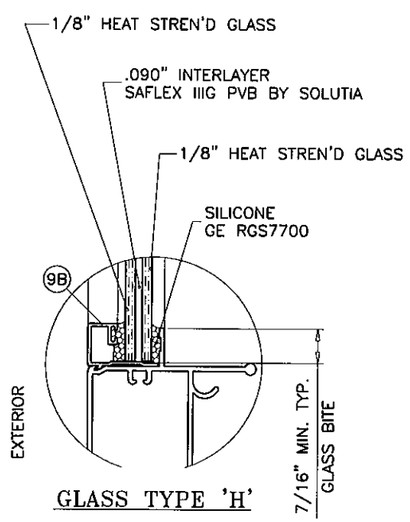

GLASS TYPE 'H'

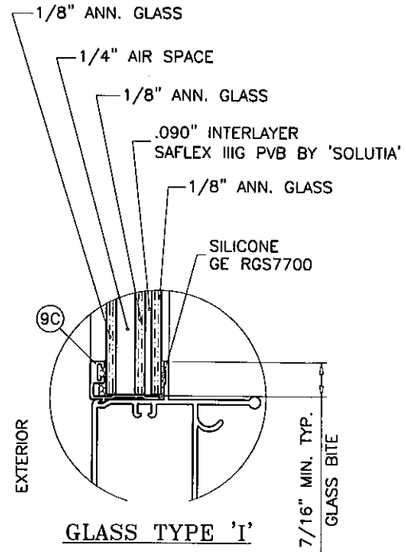

GLASS TYPE 'I'

THIS GLASS TYPE ONLY FOR LARGE MISSILE IMPACT USE. NOT QUALIFIED FOR SMALL MISSILE IMPACT AREAS.

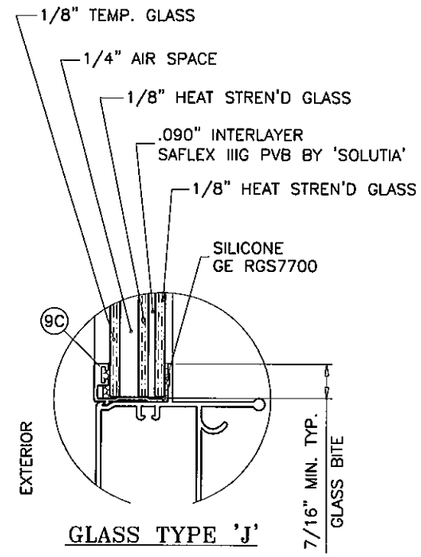

GLASS TYPE 'J'

GLAZING OPTIONS

PRODUCT REVISED
as complying with the Florida
Building Code
Acceptance No. 12-0213.05
Expiration Date 7/5/17
By Shaq I. Chanda
Miami Dade Product Control

Engr: JAVAD AHMAD
CIVIL
FLA. PE # 70592
C.A.N. 3538

APR 25 2012

AL-FAROOQ CORPORATION
ENGINEERS & PRODUCT DEVELOPMENT
1235 S.W. 87 AVE
MIAMI, FLORIDA 33174
TEL. (305) 264-8100 FAX. (305) 262-6978
COMP-ANL\W06-34TMW

SERIES 605 ALUMINUM SINGLE HUNG WDW. (L.M.I.)

T.M. WINDOWS LLC.
601 N.W. 12TH AVE.
POMPANO BEACH, FL. 33069
TEL. (954) 781-4430 FAX. (954) 781-5078

revisions:

no	date	by	description
B	11.06.06		NO CHANGE THIS SHEET
C	01.10.08		GLASS & REINF. OPTIONS ADD.
D	05.12.09		UPDATED FOR 2007 FBC
E	01.16.12		GLASS TYPE B REMOVED

date: 04-24-06
scale: 1/2" = 1"
dr. by: HAMID
chk. by:

drawing no.
W06-34

sheet 3 of 7

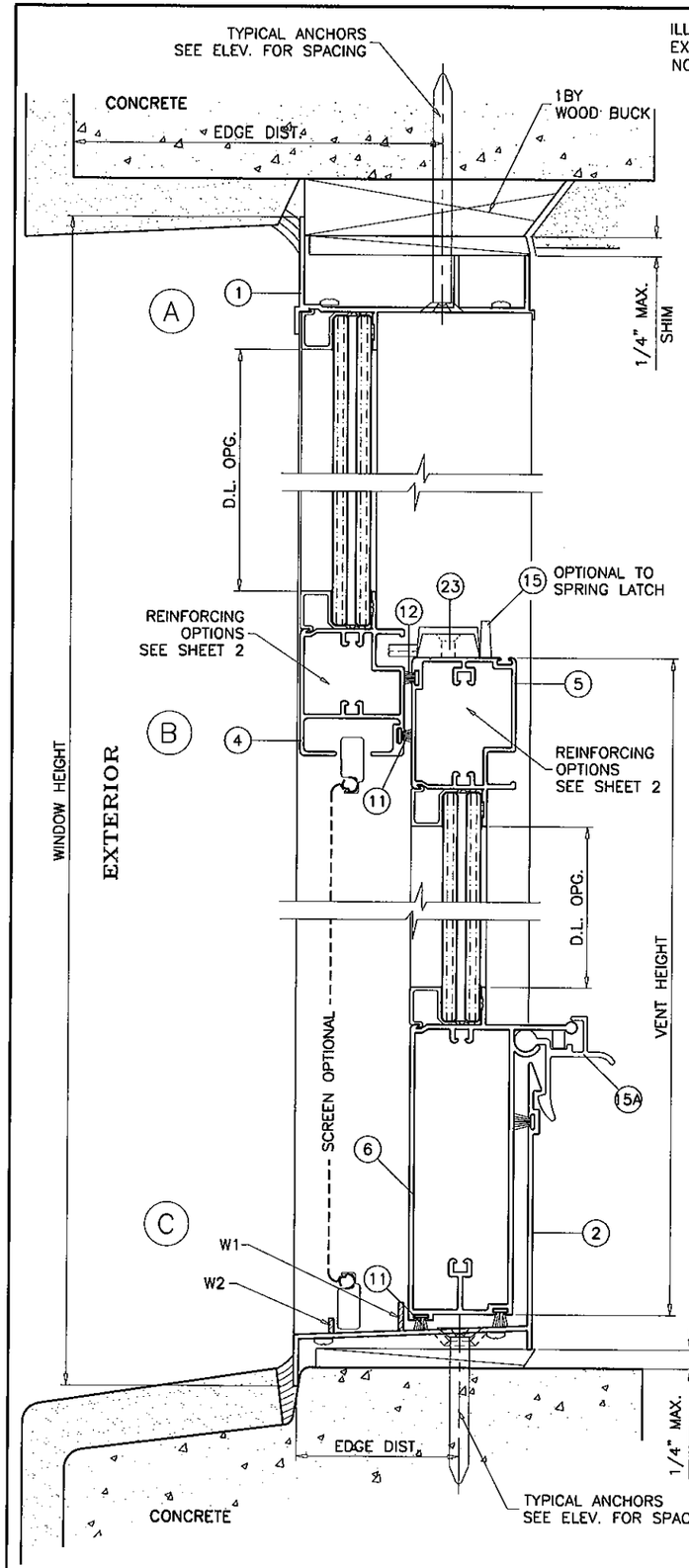

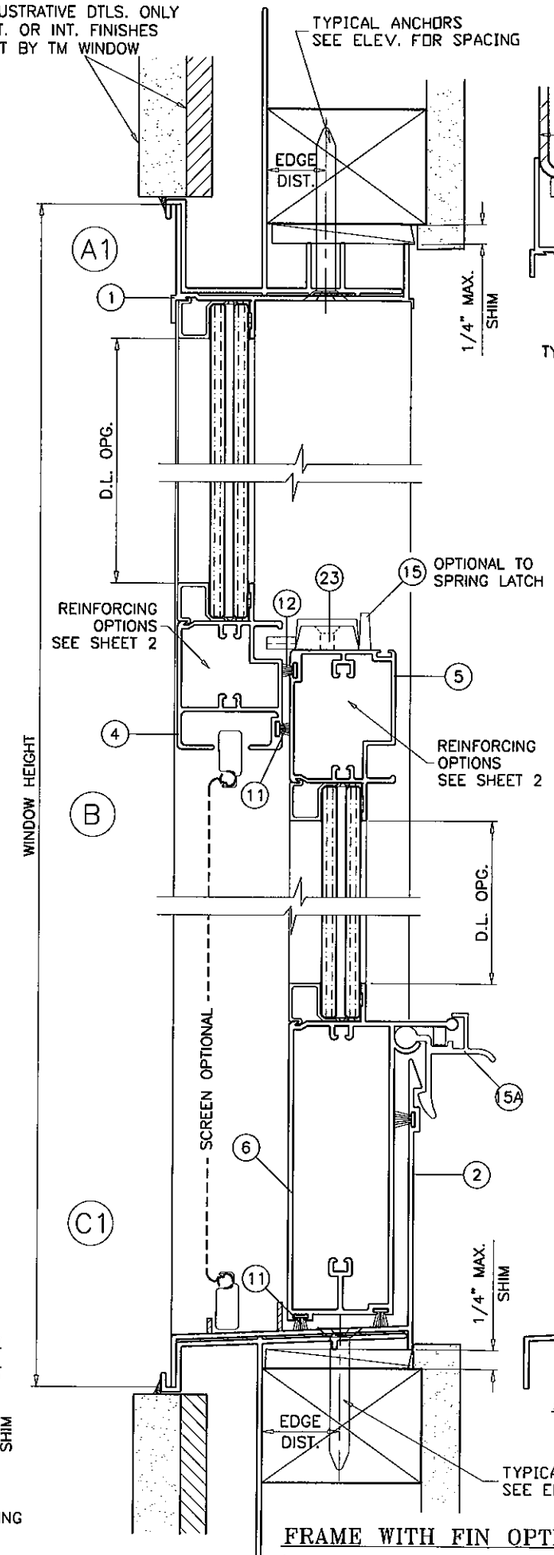

FRAME WITH FIN OPTION
(LIMIT DESIGN CAPACITY TO ±61.0 PSF MAX.)

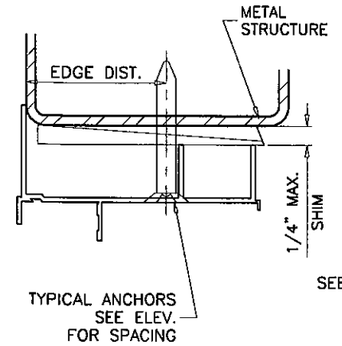

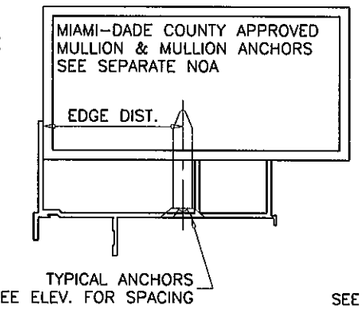

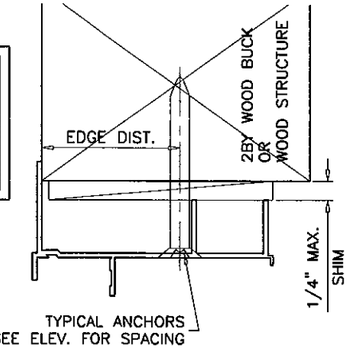

WOOD BUCKS AND METAL STRUCTURE NOT BY TM WINDOWS MUST SUSTAIN LOADS IMPOSED BY GLAZING SYSTEM AND TRANSFER THEM TO THE BUILDING STRUCTURE.

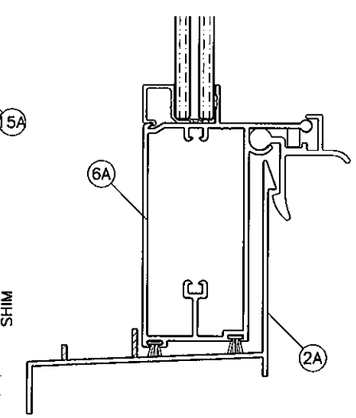

ALTERNATE FRAME SILL

PRODUCT REVISED
as complying with the Florida Building Code
Acceptance No. 12-0213.05
Expiration Date 7/5/17
By Ichng J. Cuenda
Miami Dade/Product Control

TYPICAL ANCHORS: SEE ELEV. FOR SPACING

1/4" DIA. TAPCON BY 'ITW' (Fu=120 KSI, Fy=92 KSI)

1/4" DIA. ULTRACON BY 'ELCO' (Fu=177 KSI, Fy=155 KSI)

INTO 2BY WOOD BUCKS OR WOOD STRUCTURES
1-1/2" MIN. PENETRATION INTO WOOD

THRU 1BY BUCKS INTO CONC. OR MASONRY
1-1/4" MIN. EMBED INTO CONC. OR MASONRY

DIRECTLY INTO CONC. OR MASONRY
1-1/4" MIN. EMBED INTO CONC. OR MASONRY

#14 SMS OR SELF DRILLING SCREWS (GRADE 2 CRS)
INTO METAL STRUCTURES
STEEL : 12 GA. MIN. (Fy = 36 KSI MIN.)
ALUMINUM : 1/8" THK. MIN. (6063-T5 MIN.)
(STEEL IN CONTACT WITH ALUMINUM TO BE PLATED OR PAINTED)

#12 SMS OR SELF DRILLING SCREWS (GRADE 2 CRS)

INTO MIAMI-DADE COUNTY APPROVED MULLIONS (1/8" THK. MIN.)
(NO SHIM SPACE)

TYPICAL EDGE DISTANCE

INTO CONCRETE AND MASONRY = 2" MIN.
INTO WOOD STRUCTURE = 1" MIN.
INTO METAL STRUCTURE = 1/2" MIN.

CONCRETE AT HEAD, SILL OR JAMBS f'c = 3000 PSI MIN.
C-90 HOLLOW/FILLED BLOCK AT JAMBS f'm = 2000 PSI MIN.

SEALANTS:

ALL JOINTS AND FRAME CONNECTIONS SEALED WITH SILICONE OR ACRYLIC SEALANT.

WEEPHOLES:

W1 = 1/2" LONG NOTCH AT EACH END OF INTERIOR LEG
W2 = 7/8" LONG NOTCH AT EACH END OF EXTERIOR LEG

Engr: JAVAD AHMAD
CIVIL
FLA. PE # 70592
C.A.N. 3538

APR 25 2012

AL-FAROOQ CORPORATION
ENGINEERS & PRODUCT DEVELOPMENT
1235 S.W. 87 AVE
MIAMI, FLORIDA 33174
TEL. (305) 264-8100 FAX. (305) 262-6978
COMP-ANL\W06-34TMW

SERIES 605 ALUMINUM SINGLE HUNG WDW. (L.M.I.)

T.M. WINDOWS LLC.
601 N.W. 12TH AVE.
POMPANO BEACH, FL. 33069
TEL. (954) 781-4430 FAX. (954) 781-5078

revisions:

no	date	by	description
B	11.06.06		REV. PER BCCO COMMENTS
C	01.10.08		GLASS & REINF. OPTIONS ADD.
D	05.12.09		UPDATED FOR 2007 FBC
E	01.15.12		ULTRACON ADDED

date: 04-24-06
scale: 1/2" = 1"
dr. by: HAMID
chk. by:

drawing no.
W06-34

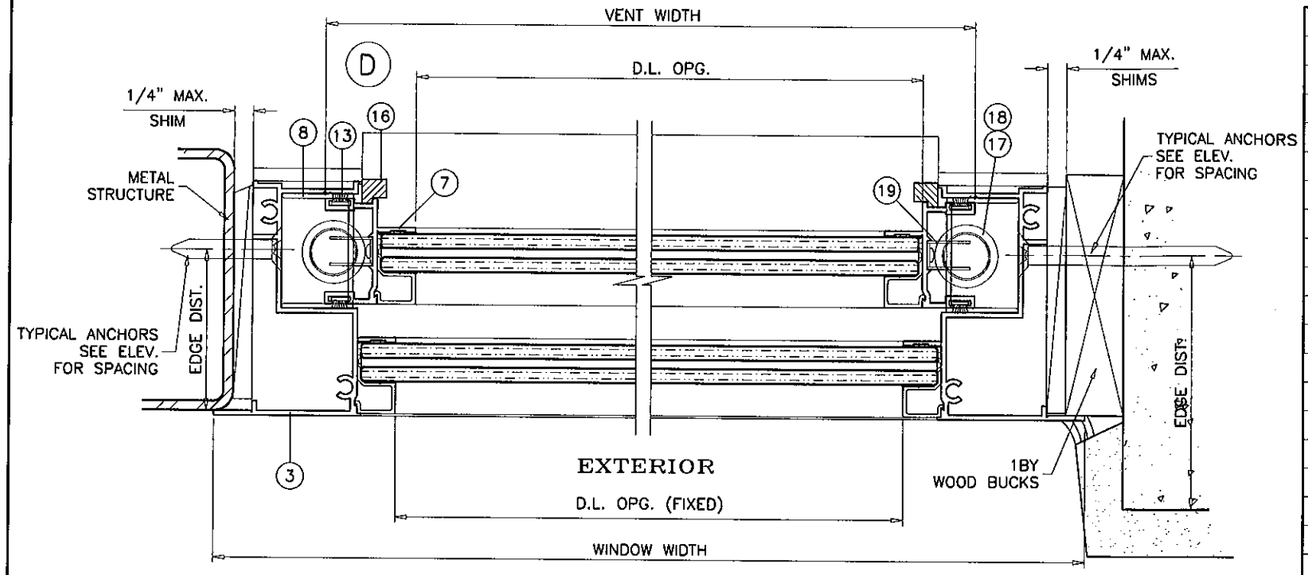

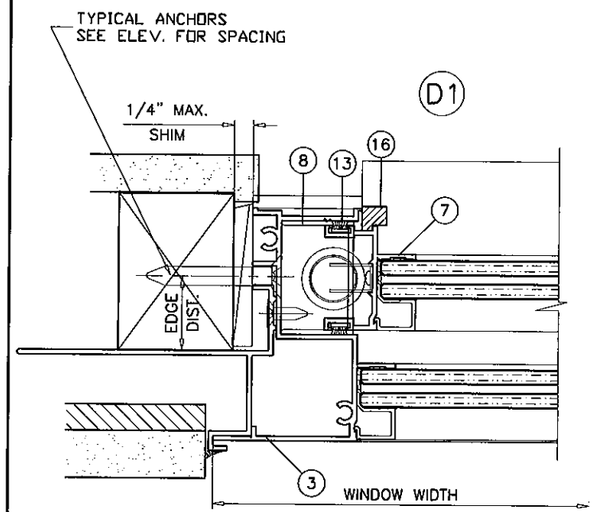

FRAME WITH FIN OPTION

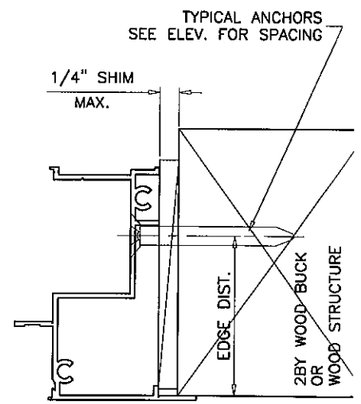

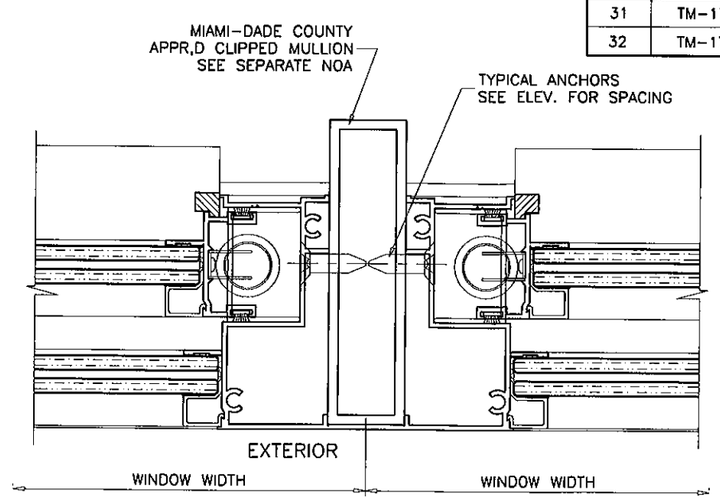

ITEM	PART #	QTY.	DESCRIPTION	MATERIAL	MANF./SUPPLIER/REMARKS
1	GW-36763	1	FRAME HEAD	6063-T6	–
2	GW-37731	1	FRAME SILL (4" HIGH)	6063-T6	–
2A	BA-3608	1	FRAME SILL (3" HIGH)	6063-T6	–
3	GW-31445	2	FRAME JAMB	6063-T6	–
4	GW-36706	1	MEETING RAIL	6063-T6	–
5	GW-36685	1	VENT TOP RAIL	6063-T6	–
6	GW-37730	1	VENT BOTTOM RAIL (4" SILL)	6063-T6	–
6A	GW-37559	1	VENT BOTTOM RAIL (3" SILL)	6063-T6	–
7	GW-31134	2	VENT JAMB STILE	6063-T6	–
8	GW-31470	2	VENT STOP	6063-T5	–
9	19-56	4/VENT	GLAZING BEAD ANGLE	6063-T5	–
9A	TM-123	4/VENT	GLAZING BEAD	6063-T5	–
9B	TM-170	4/VENT	GLAZING BEAD	6063-T6	–
9C	TM-181	4/VENT	GLAZING BEAD (INSUL. LAM. GLASS)	6063-T6	–
10	#8 X 1/2"	12/VENT	GLAZING ANGLE SCREWS	STEEL	PH SMS
11	4037	(1) STRIP	FIN SEAL WEATHERSTRIP	–	MTG.RAIL/FRAME SILL
12	2240	(1) STRIP	FIN SEAL WEATHERSTRIP	–	VENT TOP
13	3722	(2) STRIP	FIN SEAL WEATHERSTRIP	–	VENT JAMB STILES
14	–	2	1 1/2"x7/8"x3/4" FINSEAL PAD	–	FRAME SILL CORNERS
15	–	2/VENT	LATCH LOCK AT 5" FROM ENDS	CAST	VENT TOP
15A	TM-118A	2/VENT	SPRING LOADED EGRESS LOCK	6063-T6	VENT BOTTOM RAIL
16	–	4/VENT	VENT GUIDE	NYLON	VENT INT. CORNERS
17	–	2/VENT	CALDWELL SPIRAL BALANCES	–	AT FRAME JAMBS
18	WVR-9302	2/VENT	BALANCE COVER	VINYL	FRAME HEAD/JAMBS
19	N69	2/VENT	CALDWELL BALANCE CLIP	–	VENT BOTT. CORNERS
20	–	2	#12 x 3/4" P.H. SMS	STEEL	(1) AT EACH BALANCE
21	–	8	#12 x 1" P.H. SMS	STEEL	FRAME CORNERS
22	–	8	#10 x 1" P.H. SMS	STEEL	VENT CORNERS
23	–	4	#8 x 3/4" F.H. SMS.	STEEL	(2) AT EACH LATCH
24	–	4	#6 x 3/8" F.H. SMS.	STEEL	AT EA. PLASTIC GUIDE
25	–	1	1x1 3/16x3/4x1/8" CHANNEL	STEEL	AT VENT TOP
26	–	2	1x1/4 THK.x4" LONG BAR	ALUM.	(1) AT EA. MTG. RAIL END
27	–	1	1/2x1x1/2x1/8" CHANNEL	STEEL	AT MEETING RAIL
28	TM-161	2	FIN TRIM FOR JAMBS	6063-T6	–
29	TM-163	1	FIN TRIM FOR HEAD	6063-T6	–
30	TM-164	1	FIN TRIM FOR SILL	6063-T6	–
31	TM-179	1	MTG. RAIL REINFORCING CHANNEL	6063-T5	AT MEETING RAIL
32	TM-178	1	TOP RAIL REINFORCING CHANNEL	6063-T5	AT VENT TOP

PRODUCT REVISED
as complying with the Florida Building Code
Acceptance No 12-0213.05
Expiration Date 7/5/17
By Ishaq I. Chanda
Miami Dade Product Control

Engr: JAVAD AHMAD
CIVIL
FLA. PE # 70592
C.A.N. 3538

APR 25 2012

AL-FAROOQ CORPORATION
ENGINEERS & PRODUCT DEVELOPMENT
1235 S.W. 87 AVE
MIAMI, FLORIDA 33174
TEL. (305) 264-8100 FAX. (305) 262-6978
COMP-ANL\W06-34TMW

SERIES 605 ALUMINUM SINGLE HUNG WDW. (L.M.I.)

T.M. WINDOWS LLC.
601 N.W. 12TH AVE.
POMPANO BEACH, FL. 33069
TEL. (954) 781-5078 FAX. (954) 781-4430

revisions:

no	date	by	description
B	11.06.06		REV. PER BCCO COMMENTS
C	01.10.08		GLASS & REINF. OPTIONS ADD.
D	05.12.09		UPDATED FOR 2007 FBC
E	01.16.12		NO CHANGE THIS SHEET

date: 04-24-06
scale: 1/2" = 1"
dr. by: HAMID
chk. by:

drawing no.
W06-34

sheet 5 of 7

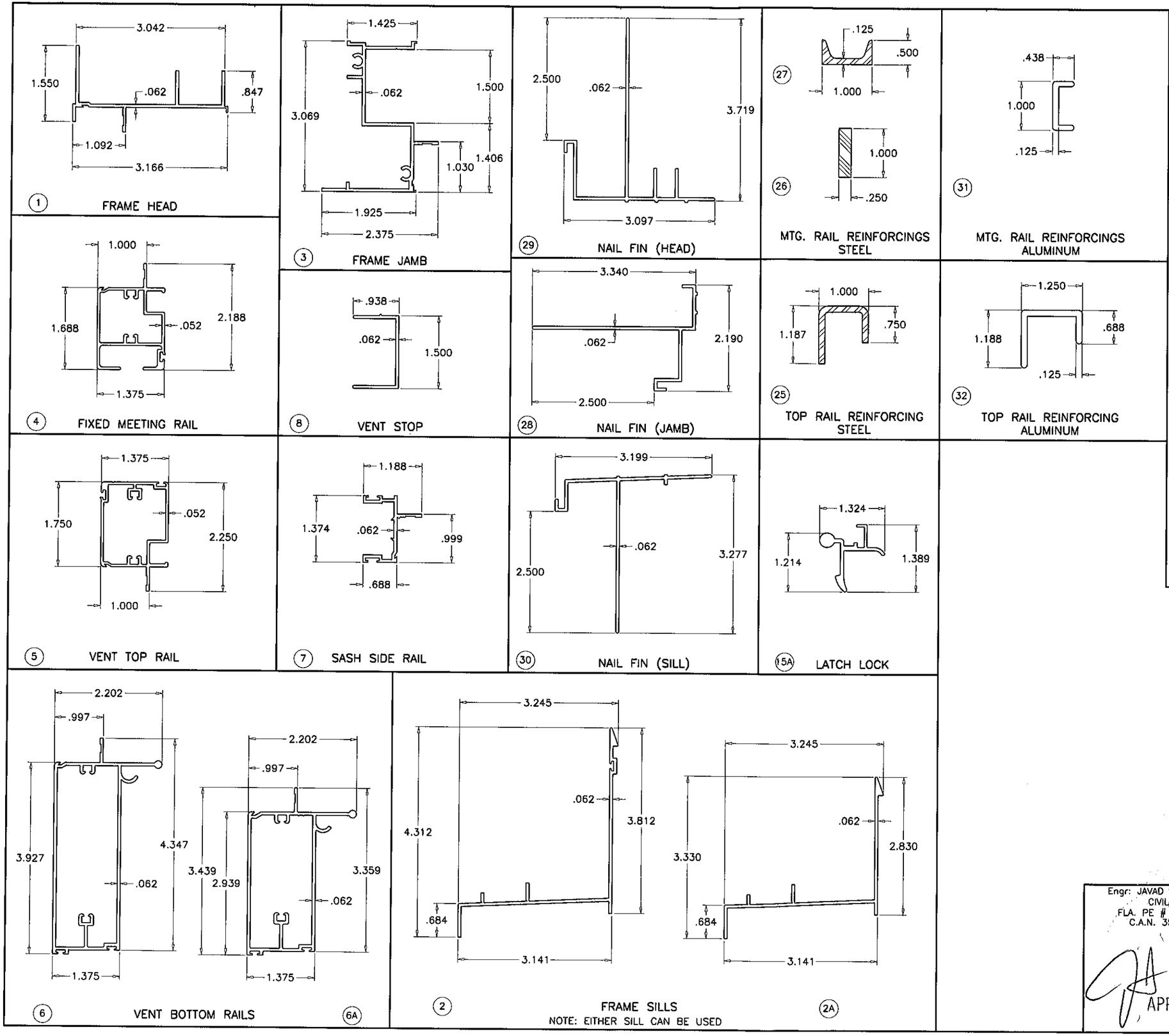

PRODUCT REVISED
as complying with the Florida Building Code
Acceptance No. 12-0213.05
Expiration Date 7/5/15
By Ishay I. Chand
Miami Dade Product Control

Engr: JAVAD AHMAD
CIVIL
FLA. PE # 70592
C.A.N. 3538
APR 25 2012

AL-FAROOQ CORPORATION
ENGINEERS & PRODUCT DEVELOPMENT
1235 S.W. 87 AVE
MIAMI, FLORIDA 33174
TEL. (305) 264-8100 FAX. (305) 262-6978
COMP-ANL\W06-34TMW

SERIES 605 ALUMINUM SINGLE HUNG WDW. (L.M.I.)

T.M. WINDOWS LLC.
601 N.W. 12TH AVE.
POMPANO BEACH, FL. 33069
TEL. (954) 781-4430 FAX. (954) 781-5078

revisions:

no	date	by	description
B	11.06.06		REV. PER BCCO COMMENTS
C	01.10.08		GLASS & REINF. OPTIONS ADD.
D	05.12.09		UPDATED FOR 2007 FBC
E	01.16.12		NO CHANGE THIS SHEET

date: 04-24-06
scale: 1/2" = 1"
dr. by: HAMID
chk. by:

drawing no.
W06-34

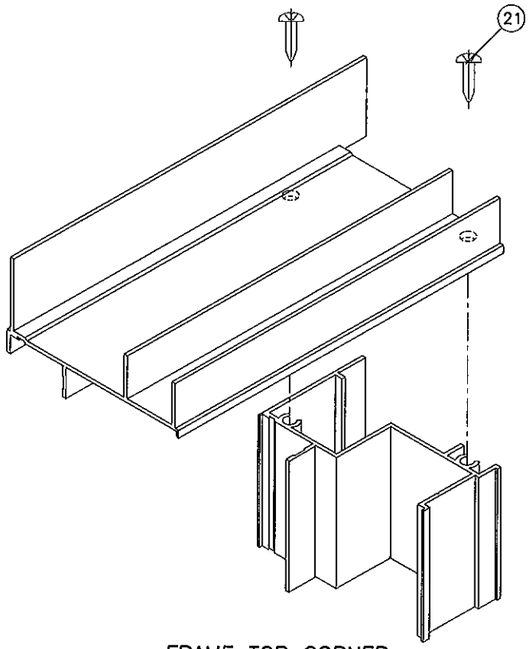

FRAME TOP CORNER

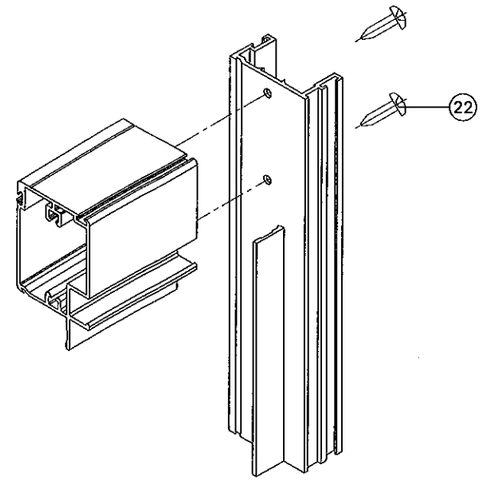

VENT TOP CORNER

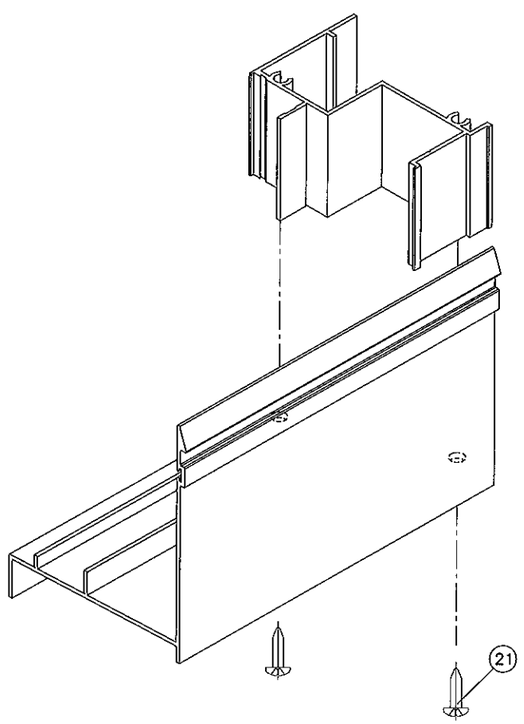

FRAME BOTTOM CORNER

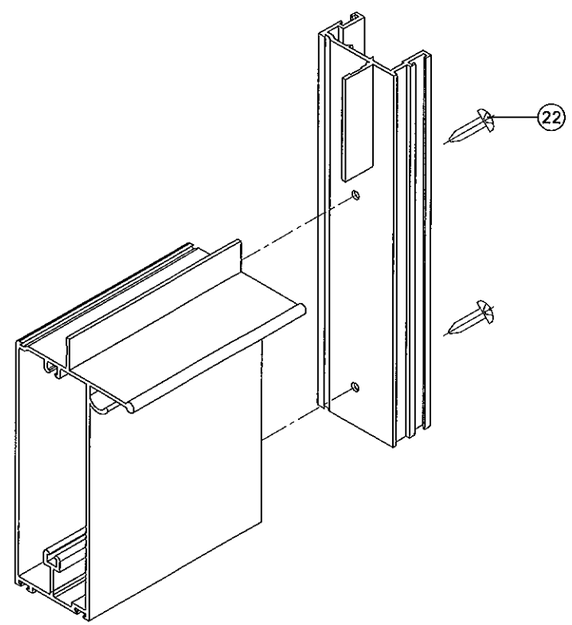

VENT BOTTOM CORNER

PRODUCT REVIEWED
In complying with the Florida
Building Code
Acceptance No 12-0213.05
Expiration Date 2/5/15
By Ishaq I. Chand
Miami Dade Product Control

Engr: JAVAD AHMAD
CIVIL
FLA. PE # 70592
C.A.N. 3538

APR 25 2012

AL-FAROOQ CORPORATION
ENGINEERS & PRODUCT DEVELOPMENT
1235 S.W. 87 AVE
MIAMI, FLORIDA 33174
TEL. (305) 264-8100 FAX. (305) 262-6978
COMP-ANL\W06-34TMW

SERIES 605 ALUMINUM SINGLE HUNG WDW. (L.M.I.)

T.M. WINDOWS LLC.
601 N.W. 12TH AVE.
POMPANO BEACH, FL. 33069
TEL. (954) 781-4430 FAX. (954) 781-5078

revisions:

no	date	by	description
B	11.06.06		REV. PER BCCO COMMENTS
C	01.10.08		GLASS & REINF. OPTIONS ADD.
D	05.12.09		UPDATED FOR 2007 FBC
E	01.15.12		NO CHANGE THIS SHEET

date: 04-24-06
scale: 1/2" = 1"
dr. by: HAMID
chk. by:

drawing no.
W06-34

sheet 7 of 7