MIAMI-DADE COUNTY
DEPARTMENT OF PERMITTING, ENVIRONMENT, AND REGULATORY AFFAIRS (PERA)
BOARD AND CODE ADMINISTRATION DIVISION

MIAMI–DADE COUNTY, FLORIDA
PRODUCT CONTROL SECTION
11805 SW 26 Street, Room 208
Miami, Florida 33175–2474
T (786) 315–2590 F (786) 315–2599
www.miamidade.gov/pera/

NOTICE OF ACCEPTANCE (NOA)

CGI Windows & Doors
10100 NW 25 Street
Miami, Fl. 33172

SCOPE:

This NOA is being issued under the applicable rules and regulations governing the use of construction materials. The documentation submitted has been reviewed and accepted by Miami–Dade County PERA–Product Control Section to be used in Miami–Dade County and other areas where allowed by the Authority Having Jurisdiction (AHJ).

This NOA shall not be valid after the expiration date stated below. The Miami–Dade County Product Control Section (In Miami–Dade County) and/or the AHJ (in areas other than Miami–Dade County) reserve the right to have this product or material tested for quality assurance purposes. If this product or material fails to perform in the accepted manner, the manufacturer will incur the expense of such testing and the AHJ may immediately revoke, modify, or suspend the use of such product or material within their jurisdiction. PERA reserves the right to revoke this acceptance, if it is determined by Miami–Dade County Product Control Section that this product or material fails to meet the requirements of the applicable building code.

This product is approved as described herein, and has been designed to comply with the Florida Building Code, including the High Velocity Hurricane Zone.

DESCRIPTION: Series "375" Aluminum Horizontal Sliding Window – L.M.I.

APPROVAL DOCUMENT: Drawing No. **WO9–13**, titled "Series–375 Alum. Horiz. Rolling Wdw. (L.M.I.)", sheets 1 through 16 of 16, dated 02/27/09, prepared by Al–Farooq Corporation, with the latest revision "**A**" dated 01/06/12, signed and sealed by Javad Ahmad, P. E., bearing the Miami–Dade County Product Control Revision stamp with the Notice of Acceptance number and Expiration date by the Miami–Dade County Product Control Section.

MISSILE IMPACT RATING: Large Missile Impact Resistant.

LIMITATIONS: Glass lites wider than 36" shall have two setting blocks and anti–Lift devises per FBC requirements

LABELING: Each unit shall bear a permanent label with the manufacturer's name or logo, city, state, model/ series and following statement: "Miami–Dade County Product Control Approved" unless otherwise noted herein.

RENEWAL of this NOA shall be considered after a renewal application has been filed and there has been no change in the applicable building code negatively affecting the performance of this product.

TERMINATION of this NOA will occur after the expiration date or if there has been a revision or change in the materials, use, and/or manufacture of the product or process. Misuse of this NOA as an endorsement of any product, for sales, advertising or any other purposes shall automatically terminate this NOA. Failure to comply with any section of this NOA shall be cause for termination and removal of NOA.

ADVERTISEMENT: The NOA number preceded by the words Miami–Dade County, Florida, and followed by the expiration date may be displayed in advertising literature. If any portion of the NOA is displayed, then it shall be done in its entirety.

INSPECTION: A copy of this entire NOA shall be provided to the user by the manufacturer or its distributors and shall be available for inspection at the job site at the request of the Building Official.

This NOA **revises NOA No. 09–0402.20** and consists of this page 1, evidence pages E–1 and E–2, as well as approval document mentioned above.

The submitted documentation was reviewed by **Jaime D. Gascon, P. E.**

MIAMI-DADE COUNTY APPROVED

J. GASCON
4/27/12

NOTICE OF ACCEPTANCE: EVIDENCE SUBMITTED

A. DRAWINGS

1. Manufacturer's die drawings and sections.
   (Submitted under previous NOA No. 09–0402.20)
2. Drawing No. **WO9–13**, titled "Series–375 Alum. Horiz. Rolling Wdw. (L.M.I.)", sheets 1 through 16 of 16, dated 02/27/09, prepared by Al–Farooq Corporation, with the latest revision "**A**" dated 01/6/12, signed and sealed by Javad Ahmad, P. E.

B. TESTS

1. Test reports on:
   1) Air Infiltration Test, per FBC, TAS 201–94
   2) Uniform Static Air Pressure Test, Loading per FBC, TAS 202–94
   3) Water Resistance Test, per FBC, TAS 202–94
   4) Small Missile Impact Test, per FBC, TAS 201–94
   5) Cyclic Wind Pressure Loading, per FBC, TAS 203–94
   6) Forced Entry Test, Type "A–A" horizontal sliding window, Grade 10, per FBC 2411 3.2.1, TAS 202–94, per ASTM F 588–04, AAMA 1302.5–04 and CAWM 301–04

   along with marked–up drawings and installation diagram of aluminum horizontal sliding windows, prepared by Hurricane Test Laboratory, LLC, Test Report No. **HTL–0080–0907–08**, dated 12/18/08, signed and sealed by Vinu J. Abraham, P. E.
   (Submitted under previous NOA No. 09–0402.20)

C. CALCULATIONS

1. Anchor verification calculations and structural analysis, complying with FBC–2010, dated 02/01/12, prepared by Al–Farooq Corporation, signed and sealed by Javad Ahmad, P. E.
2. **Glazing complies with ASTM E1300–04/ 09**

D. QUALITY ASSURANCE

1. Miami–Dade Department of Permitting, Environment, and Regulatory Affairs (PERA).

E. MATERIAL CERTIFICATIONS

1. Notice of Acceptance No. **11–0624.02** issued to E.I. DuPont DeNemours & Co., Inc. for their "**DuPont Sentry Glass® Interlayer**" dated 05/26/2010, expiring on 01/14/17.
2. Notice of Acceptance No. **08–0520.08** issued to Solutia Inc. for their "**Solutia Vanceva" composite interlayer**" dated, expiring on 12/11/13.

Jaime D. Gascon, P. E.
Product Control Section Supervisor
NOA No. 12–0214.08
Expiration Date: June 10, 2014
Approval Date: May 03, 2012

NOTICE OF ACCEPTANCE: EVIDENCE SUBMITTED

F. STATEMENTS

1. Statement letter of no financial interest, conformance and compliance with the FBC–2010, dated 12/22/11, signed and sealed by Javad Ahmad, P. E.
2. Testing Proposal No. **07–3069 (Revised)**, dated 01/18/09, issued by Miami–Dade County – Product Control, signed by Manuel Perez, P. E.
   (Submitted under previous NOA No. 09–0402.20)
3. Laboratory compliance letters for Test Report No. **HTL–0080–0907–08**, issued by Hurricane Test Laboratory, LLC, dated 12/18/08, signed and sealed by Vinu J. Abraham, P. E.
   (Submitted under previous NOA No. 09–0402.20)

G. OTHERS

1. Notice of Acceptance No. **09–0402.20**, issued to CGI Windows & Doors for their "Series 375 Aluminum Horizontal Sliding Window – L.M.I.", approved on 06/10/09 and expiring on 06/10/14.

Jaime D. Gascon, P. E.
Product Control Section Supervisor
NOA No. 12–0214.08
Expiration Date: June 10, 2014
Approval Date: May 03, 2012

GLASS TYPES

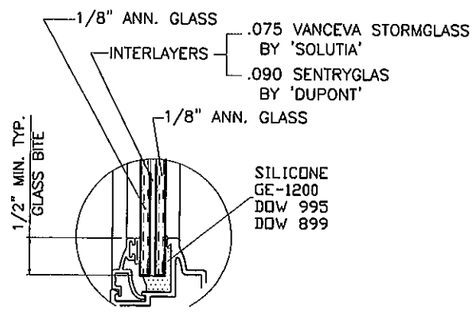

5/16" NOMINAL
GLASS TYPE '1'

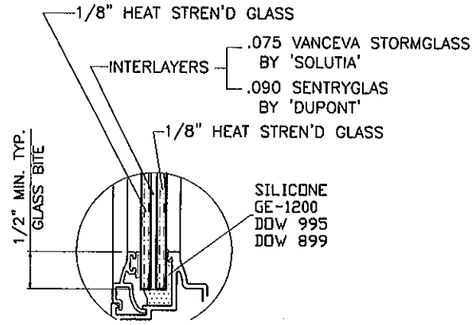

5/16" NOMINAL
GLASS TYPE '2'

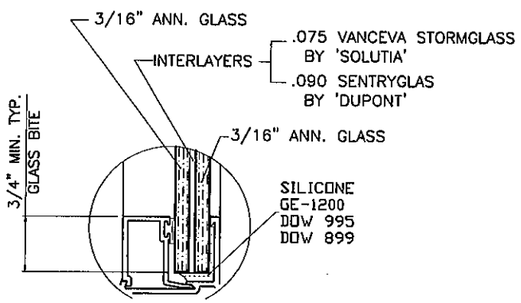

7/16" NOMINAL
GLASS TYPE '3'

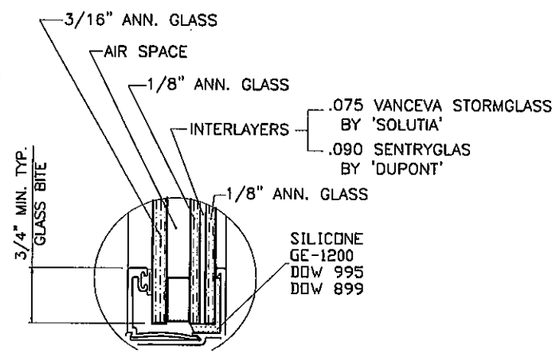

13/16" INSULATED
GLASS TYPE '4'

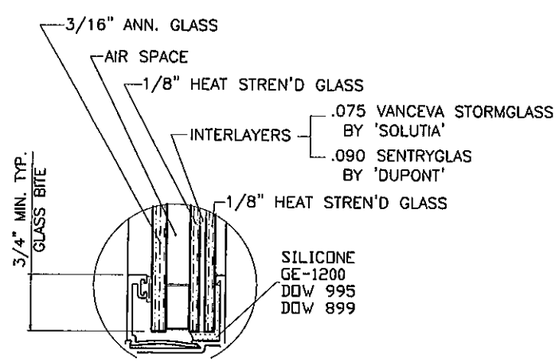

13/16" INSULATED
GLASS TYPE '5'

AIR SPACE CONSISTING OF:
SPACER:
METAL SPACER AROUND
THE PERIMETER OF THE GLASS.

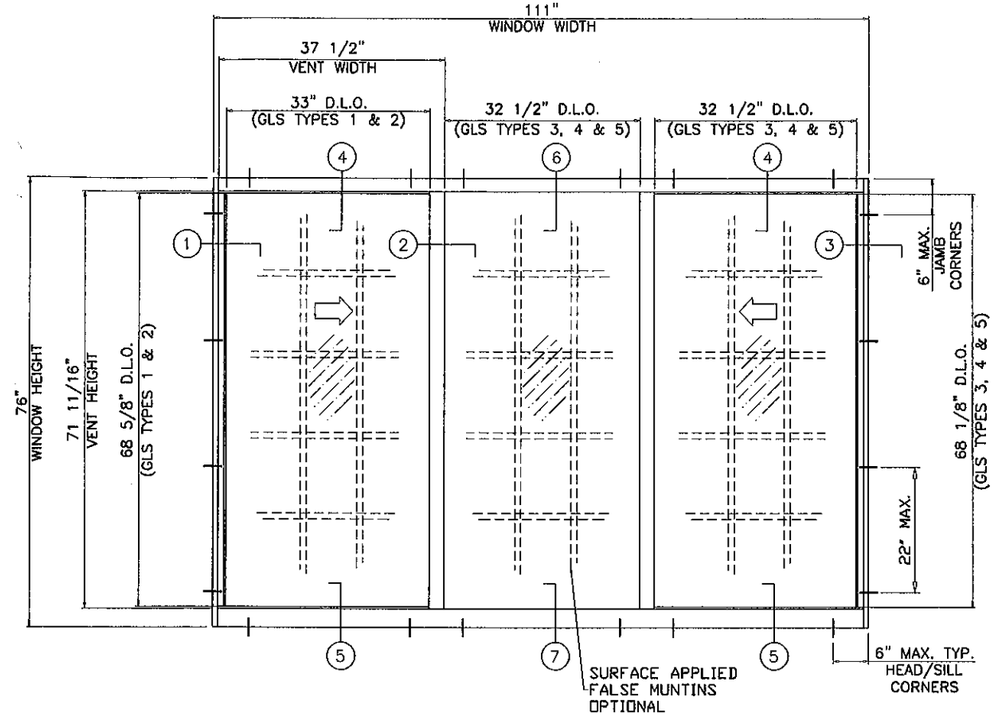

TYPICAL TEST ELEVATION

INSTRUCTIONS FOR USING CAPACITY CHARTS:

STEP 1 DETERMINE THE REQUIRED DESIGN PRESSURES FOR A GIVEN WINDOW OPENING.

STEP 2 DETERMINE THE CAPACITY OF THE WINDOW SIZE/CONFIGURATION/GLASS TYPE FROM CHARTS ON SHEETS 5 AND 7.
FOR INSTALLATION ANCHOR TYPES SEE SHEETS 6 & 8.

STEP 3 IF ALUMINUM BUCKS ARE USED, VERIFY THE BUCK INSTALLATION CAPACITY FROM SHEETS 14 & 15.

STEP 4 FOR UNCLIPPED MULLED WINDOWS DETERMINE MULLION CAPACITY FOR 1X4 TUBE FROM CHARTS ON SHEET 12.

STEP 5 FOR MULLION ANCHOR CAPACITY SEE CHART ON SHEET 13.

THE LOWEST SELECTED VALUE APPLY TO THE INSTALLATION AND MUST EQUAL OR EXCEED THE REQUIRED DESIGN PRESSURES OBTAINED FROM STEP 1.

NOTES:

THIS PRODUCT HAS BEEN DESIGNED AND TESTED TO COMPLY WITH THE REQUIREMENTS OF THE FLORIDA BUILDING CODE INCLUDING HIGH VELOCITY HURRICANE ZONE (HVHZ).

WOOD BUCKS BY OTHERS, MUST BE ANCHORED PROPERLY TO TRANSFER LOADS TO THE STRUCTURE.

ANCHORS SHALL BE AS LISTED, SPACED AS SHOWN ON DETAILS, ANCHORS EMBEDMENT TO BASE MATERIAL SHALL BE BEYOND WALL DRESSING OR STUCCO.

ANCHORING OR LOADING CONDITIONS NOT SHOWN IN THESE DETAILS ARE NOT PART OF THIS APPROVAL.

A LOAD DURATION INCREASE IS USED IN DESIGN OF ANCHORS INTO WOOD ONLY.

MATERIALS INCLUDING BUT NOT LIMITED TO STEEL/METAL SCREWS, THAT COME INTO CONTACT WITH OTHER DISSIMILAR MATERIALS SHALL MEET THE REQUIREMENTS OF THE FLORIDA BLDG. CODE SECTION 2003.8.4.

THESE WINDOWS ARE RATED FOR LARGE MISSILE IMPACT. SHUTTERS ARE NOT REQUIRED.

Engr: JAVAD AHMAD
CIVIL
FLA. PE # 70592
C.A.N. 3538

FEB 01 2012

PRODUCT REVISED
as complying with the Florida
Building Code
Acceptance No 12-0214.08
Expiration Date 06/10/2014
By
Miami Dade Product Control

AL-FAROOQ CORPORATION
ENGINEERS & PRODUCT DEVELOPMENT
1235 S.W. 87 AVE
MIAMI, FLORIDA 33174
TEL. (305) 264-8100 FAX. (305) 262-6978
COMP-ANL\W09-13CGI

SERIES-375 ALUM. HORIZ. ROLLING WDW. (L.M.I.)

CGI WINDOWS & DOORS
10100 N.W. 25TH STREET
DORAL, FL. 33172
TEL. (305) 593-6590 FAX. (305) 593-6592

revisions:

no	date	by	description
A	01.06.12		UPDATED TO 2010 FBC

date: 02-27-09
scale: -
dr. by: -
chk. by:

drawing no.
W09-13

GENERAL WINDOW SECTIONS
FLANGE FRAME

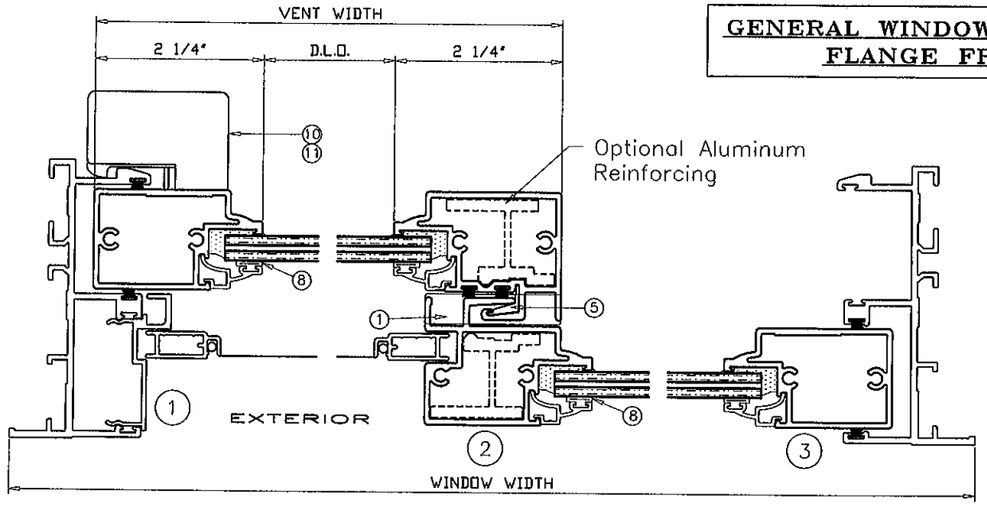

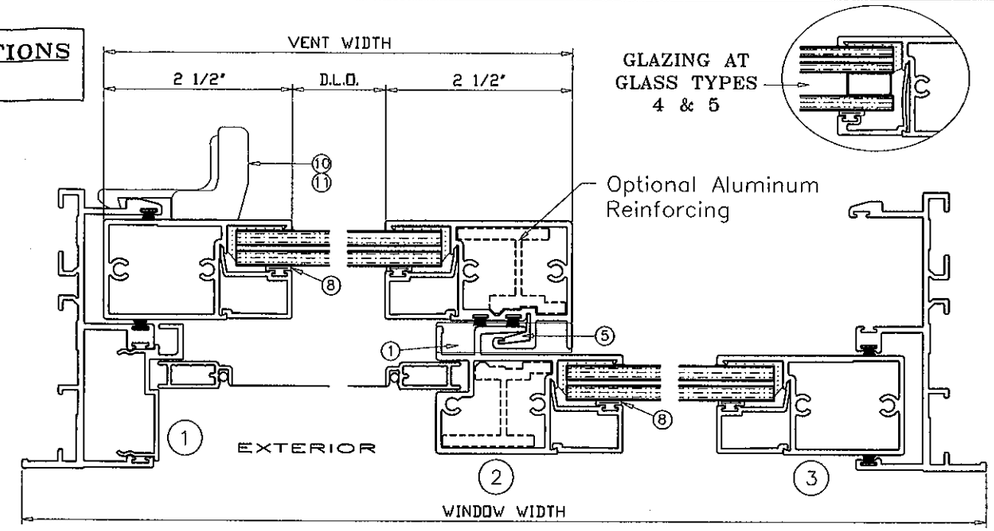

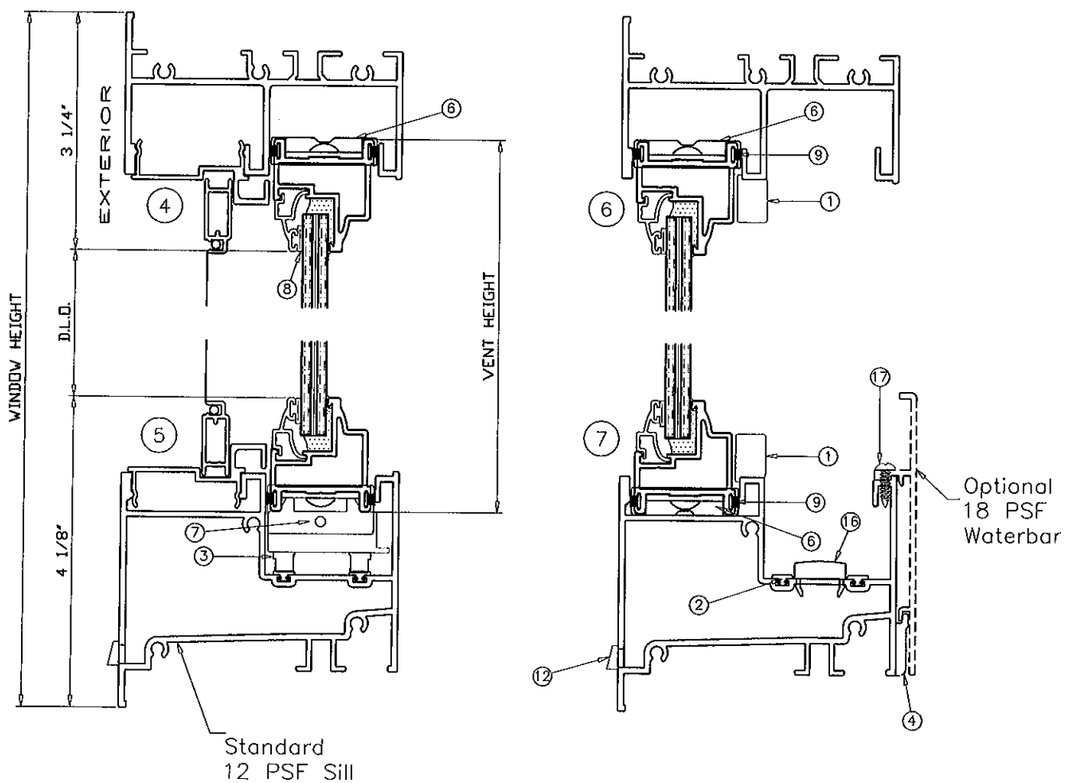

GLASS TYPES
1 & 2

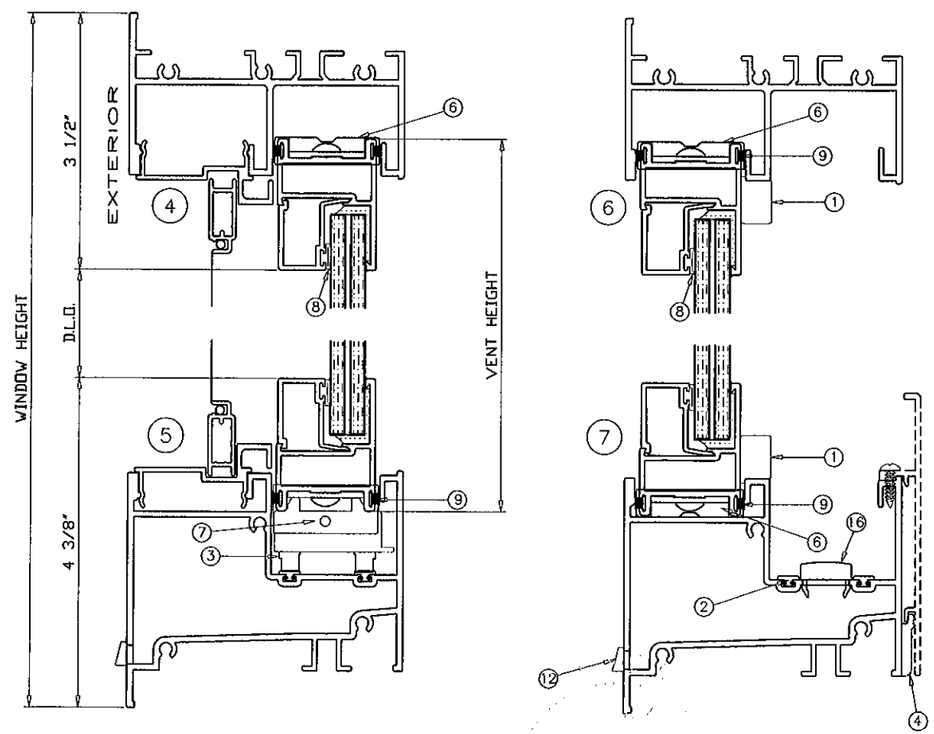

GLASS TYPES
3, 4, & 5

Engr: JAVAD. AHMAD
CIVIL
FLA. PE # 70592
C.A.N. 3838

FEB 0 1 2012

PRODUCT REVISED
as complying with the Florida
Building Code
Acceptance No 12-0214.08
Expiration Date 06/10/2014
By
Miami Dade Product Control

AL-FAROOQ CORPORATION
ENGINEERS & PRODUCT DEVELOPMENT
1235 S.W. 87 AVE
MIAMI, FLORIDA 33174
TEL. (305) 264-8100 FAX. (305) 262-6978

COMP-ANL\W09-13CGI

SERIES-375 ALUM. HORIZ. ROLLING WDW. (L.M.I.)

CGI WINDOWS & DOORS
10100 N.W. 25TH STREET
DORAL, FL. 33172
TEL. (305) 593-6590 FAX. (305) 593-6592

revisions:

no	date	by	description
A	01.06.12		NO CHANGE THIS SHEET

date: 02-27-09
scale: -
dr. by: -
chk. by:

drawing no.
W09-13

GENERAL WINDOW SECTIONS
EQUAL LEG FRAME

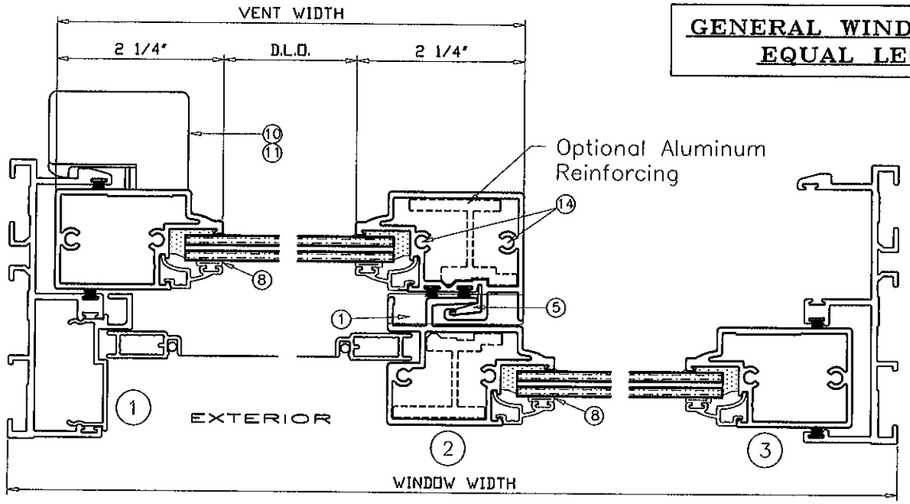

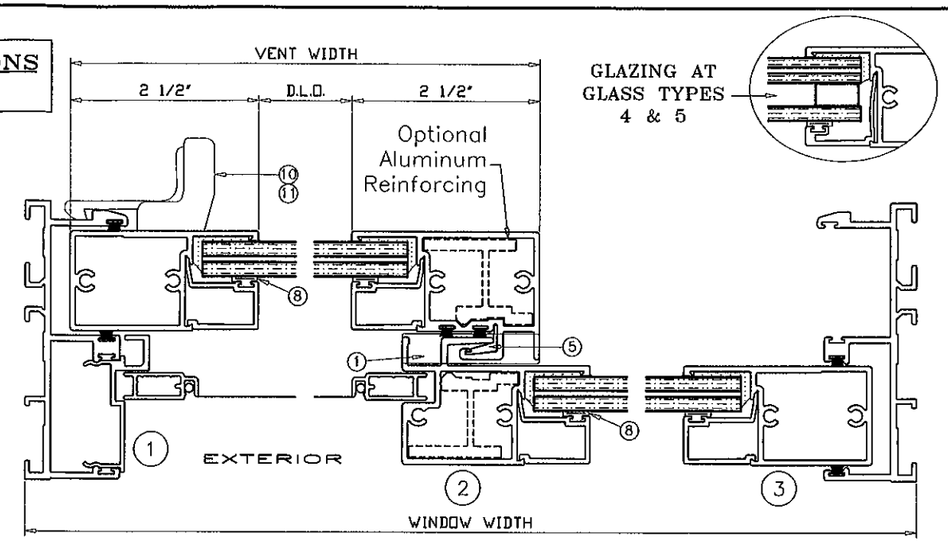

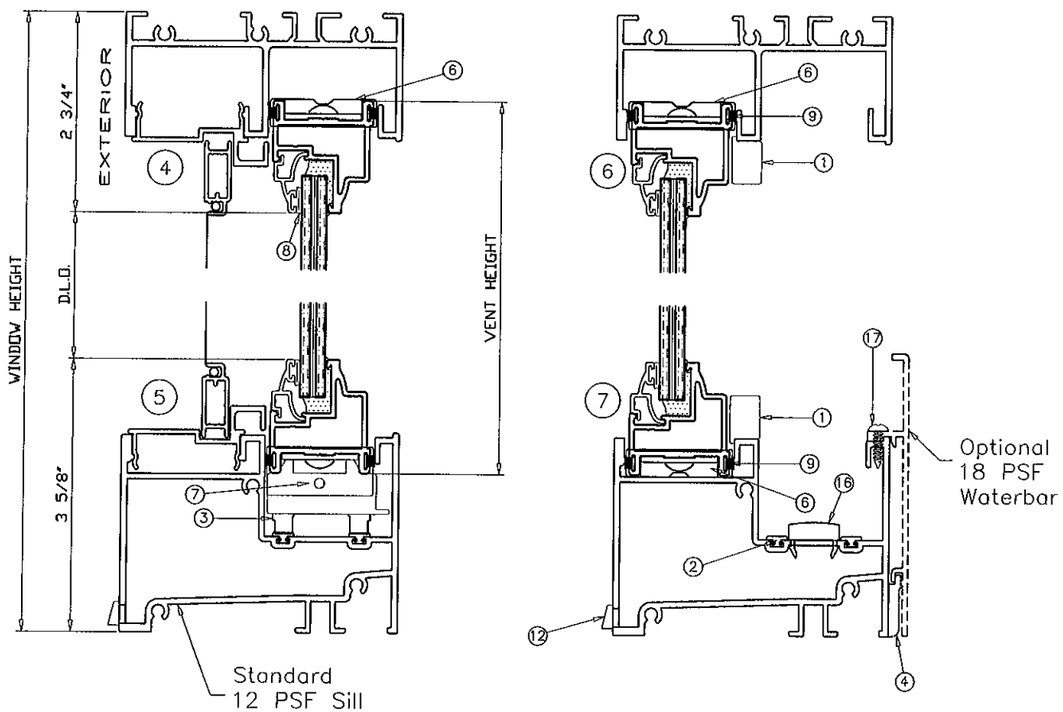

GLASS TYPES
1 & 2

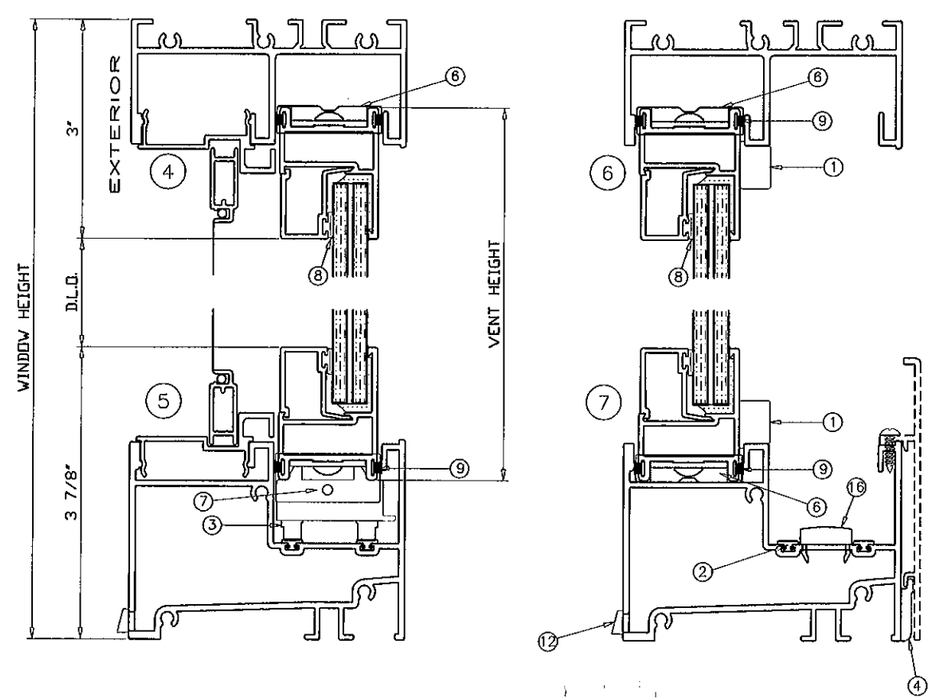

GLASS TYPES
3, 4, & 5

Engr: JAVAD AHMAD
CIVIL
FLA. PE # 70592
C.A.N. 3538
FEB 01 2012

PRODUCT REVISED
as complying with the Florida
Building Code
Acceptance No 12-0214.08
Expiration Date 06/10/2014
By
Miami Dade Product Control

AL-FAROOQ CORPORATION
ENGINEERS & PRODUCT DEVELOPMENT
1235 S.W. 87 AVE
MIAMI, FLORIDA 33174
TEL. (305) 264-8100 FAX. (305) 262-6978

COMP-ANL\W09-13CGI

SERIES-375 ALUM. HORIZ. ROLLING WDW. (L.M.I.)

CGI WINDOWS & DOORS
10100 N.W. 25TH STREET
DORAL, FL. 33172
TEL. (305) 593-6590 FAX. (305) 593-6592

revisions:

no	date	by	description
A	01.06.12		NO CHANGE THIS SHEET

date: 02-27-09
scale: -
dr. by: -
chk. by:

drawing no.
W09-13

sheet 3 of 16

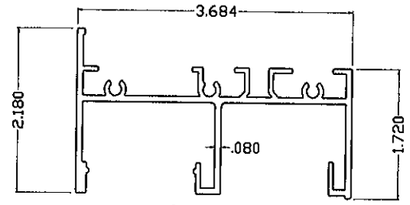

CGI-650
FLANGE FRAME HEAD
6063-T6

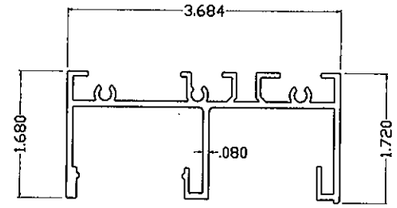

CGI-656
EQUAL LEG FRAME HEAD
6063-T6

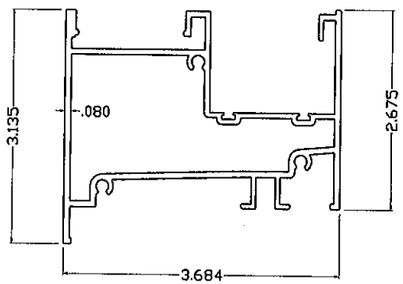

CGI-651
FLANGE FRAME SILL
6063-T6

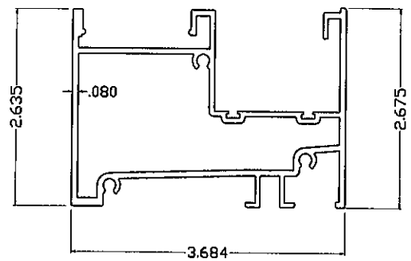

CGI-657
EQUAL LEG FRAME SILL
6063-T6

ITEM	PART #	QUANTITY	DESCRIPTION	MATERIAL	MANF./SUPPLIER	REMARKS
1	CGI-614C	2	TIE DOWN BLOCK	ZINC	CUSTOM CASTING	w/ (2) #10 x 3/4" FH SMS into vent & (3) #8 x 1" FH SMS into frame
2	CGI-684	2	ROLLER TRACK INSERT	PVC	CGI EXTRUSION	Continous at frame sill
3	CGI-680	AS REQD.	QUAD ROLLER	NYLON	CUSTOM CASTING	Attached to CGI-685 (vent bottom clip) w/ (1) #6 x 1/2" FH SMS
4	CGI-683	3	WATERBAR CLIP	NYLON	CUSTOM CASTING	w/ (1) #10 x 3/4" FH SMS
5	CGI-612P	1/ INTRLK	INTERLOCK SNUBBER	PVC	CGI EXTRUSION	Continous at interlock
6	CGI-681	2/ OPER 4/ FXD	VENT END CLIP	NYLON	CUSTOM CASTING	Attached w/ vent assembly screws
7	CGI-685	2	OPERABLE VENT BOTTOM CLIP	NYLON	CUSTOM CASTING	Attached w/ vent assembly screws
8	CGI-382V	AS REQD.	VINYL BULB	PVC	CGI EXTRUSION	
9	W2301NG	AS REQD.	WOOL PILE WITH CENTER SOFT FIN (GRAY)	PILE	ULTRAFAB/SCHLEGEL	
10	CGI-615C & 616C	1	EGRESS LOCK AND PULL	ZINC	CUSTOM CASTING	w/ (2) #8 x 5/8" FH SMS
11	CGI-682	1	SELF CLOSING LOCK	ZINC	CUSTOM CASTING	w/ (2) #8 x 5/8" FH SMS
12	HI-FLO WEEPER	3 OR 4	WEEP HOLE COVER	NYLON	PEP	
13	-	3/ CORNER	FRAME ASSEMBLY SCREWS	S/S	VARIES	#10 x 1 1/4" PH SMS
14	-	2/ CORNER	VENT ASSEMBLY SCREWS	S/S	VARIES	#10 x 1 1/4" PH SMS
15	GE-2000	AS REQD.	LOW MODULUS SEALANT	SILICONE	GENERAL ELECTRIC	AT FRAME JOINTS
16	CGI-686	AS REQD.	ACCESS HOLE COVER (w/DRAIN PROVISION)	NYLON	CUSTOM CASTING	Minimum 1 at each Sill install. screw
17	-	AS REQD.	WATERBAR SCREWS AT 25" O.C. MAX.	S/S	VARIES	#6 X 1/4" PH SMS

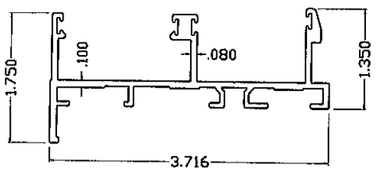

CGI-652
FLANGE FRAME JAMB
6063-T6

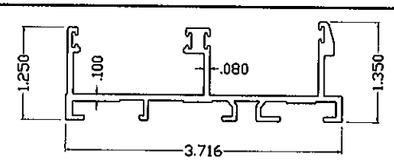

CGI-658
EQUAL LEG FRAME JAMB
6063-T6

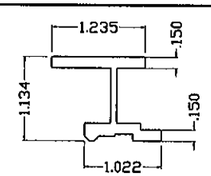

CGI-655
REINFORCEMENT
6063-T6

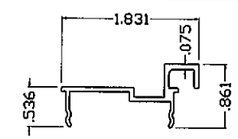

CGI-654
SCREEN ADAPTOR
6063-T5

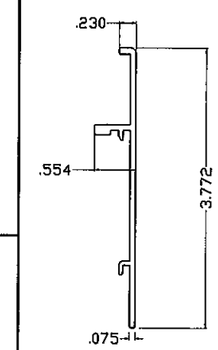

CGI-653
WATERBAR
6063-T5

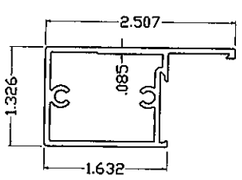

CGI-625
SQUARE LOCK STILE
6063-T6

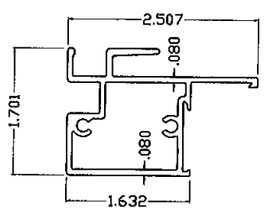

CGI-626
SQUARE FIXED INTERLOCK
6063-T6

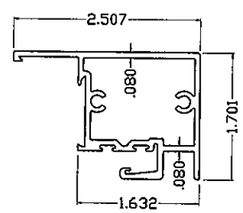

CGI-627
SQUARE OPERABLE INTERLOCK
6063-T6

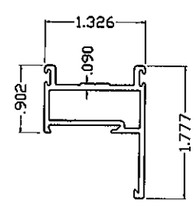

CGI-628
SQUARE TOP/BOTTOM RAIL
6063-T6

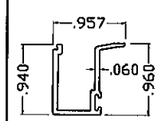

CGI-630
7/16" GLAZING BEAD
6063-T6

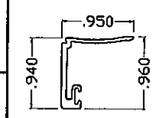

CGI-629
IG GLAZING BEAD
6063-T6

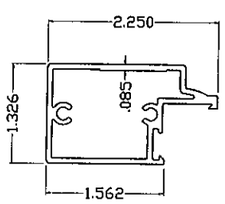

CGI-604
OGEE LOCK STILE
6063-T6

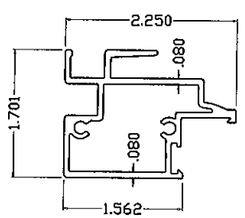

CGI-605
OGEE FIXED INTERLOCK
6063-T6

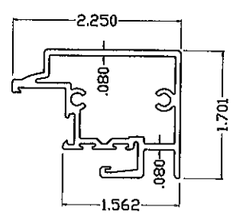

CGI-606
OGEE OPERABLE INTERLOCK
6063-T6

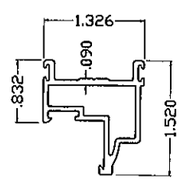

CGI-607
OGEE TOP/BOTTOM RAIL
6063-T6

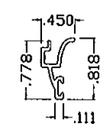

CGI-609
5/16" GLAZING BEAD
6063-T5

Engr: JAVAD AHMAD
CIVIL
FLA. PE # 70592
C.A.N. 3538

FEB 01 2012

PRODUCT REVISED
as complying with the Florida Building Code
Acceptance No 12-0214.08
Expiration Date 06/10/2014
By
Miami Dade Product Control

AL-FAROOQ CORPORATION
ENGINEERS & PRODUCT DEVELOPMENT
12235 S.W. 87 AVE
MIAMI, FLORIDA 33174
TEL. (305) 264-8100 FAX. (305) 262-6978

COMP-ANL\W09-13CGI

SERIES-375 ALUM. HORIZ. ROLLING WDW. (L.M.I.)

CGI WINDOWS & DOORS
10100 N.W. 25TH STREET
DORAL, FL. 33172
TEL. (305) 593-6590 FAX. (305) 593-6592

revisions:

no	date	by	description
A	01.06.12		NO CHANGE THIS SHEET

date: 02-27-09
scale: -
dr. by: -
chk. by:

drawing no.
W09-13

WINDOW DIMS.			INTERLOCKS WITHOUT REINFORCING						INTERLOCKS WITH REINFORCING					
WIDTH		HEIGHT	GLASS TYPE 1		GLASS TYPE 4		GLASS TYPES 2, 3 & 5		GLASS TYPE 2		GLASS TYPE 3		GLASS TYPE 5	
2 PANEL	3 PANEL		EXT.(+)	INT.(−)	EXT.(+)	INT.(−)	EXT.(+)	INT.(−)	EXT.(+)	INT.(−)	EXT.(+)	INT.(−)	EXT.(+)	INT.(−)
36"	54"	36"	120.0	150.0	120.0	150.0	120.0	150.0	120.0	150.0	120.0	150.0	120.0	150.0
42"	63"		120.0	150.0	120.0	150.0	120.0	150.0	120.0	150.0	120.0	150.0	120.0	150.0
48"	72"		120.0	150.0	120.0	150.0	120.0	150.0	120.0	150.0	120.0	150.0	120.0	150.0
54"	81"		120.0	150.0	120.0	150.0	120.0	150.0	120.0	150.0	120.0	150.0	120.0	150.0
60"	90"		120.0	150.0	120.0	150.0	120.0	150.0	120.0	150.0	120.0	150.0	120.0	150.0
66"	99"		120.0	150.0	120.0	150.0	120.0	150.0	120.0	150.0	120.0	150.0	120.0	150.0
72"	108"		120.0	145.2	120.0	150.0	120.0	150.0	120.0	150.0	120.0	150.0	120.0	150.0
78"	117"		120.0	130.6	120.0	145.7	120.0	150.0	120.0	150.0	120.0	150.0	120.0	150.0
84"	126"		118.3	118.3	120.0	131.9	120.0	150.0	120.0	150.0	120.0	150.0	120.0	150.0
36"	54"	48"	120.0	150.0	120.0	150.0	120.0	150.0	120.0	150.0	120.0	150.0	120.0	150.0
42"	63"		120.0	135.1	120.0	135.1	120.0	150.0	120.0	150.0	120.0	150.0	120.0	150.0
48"	72"		120.0	123.1	120.0	123.1	120.0	150.0	120.0	150.0	120.0	150.0	120.0	150.0
54"	81"		114.2	114.2	114.2	114.2	120.0	150.0	120.0	150.0	120.0	150.0	120.0	150.0
60"	90"		107.4	107.4	107.4	107.4	120.0	150.0	120.0	150.0	120.0	150.0	120.0	150.0
66"	99"		102.3	102.3	102.3	102.3	120.0	150.0	120.0	150.0	120.0	150.0	120.0	150.0
72"	108"		98.5	98.5	98.5	98.5	120.0	147.7	120.0	150.0	120.0	150.0	120.0	150.0
78"	117"		85.0	85.0	85.0	85.0	100.0	100.0	120.0	120.0	120.0	120.0	120.0	120.0
84"	126"		83.9	83.9	85.0	85.0	100.0	100.0	120.0	120.0	120.0	120.0	120.0	120.0
36"	54"	54"	120.0	131.3	120.0	131.3	120.0	150.0	120.0	150.0	120.0	150.0	120.0	150.0
42"	63"		116.4	116.4	116.4	116.4	120.0	150.0	120.0	150.0	120.0	150.0	120.0	150.0
48"	72"		105.5	105.5	105.5	105.5	120.0	150.0	120.0	150.0	120.0	150.0	120.0	150.0
54"	81"		97.3	97.3	97.3	97.3	120.0	145.9	120.0	150.0	120.0	150.0	120.0	150.0
60"	90"		90.9	90.9	90.9	90.9	120.0	136.4	120.0	150.0	120.0	150.0	120.0	150.0
66"	99"		86.0	86.0	86.0	86.0	120.0	128.9	120.0	150.0	120.0	150.0	120.0	150.0
72"	108"		82.1	82.1	82.1	82.1	100.0	100.0	120.0	120.0	120.0	120.0	120.0	120.0
78"	117"		78.6	78.6	79.1	79.1	100.0	100.0	120.0	120.0	120.0	120.0	120.0	120.0
84"	126"		74.6	74.6	76.7	76.7	100.0	100.0	120.0	120.0	120.0	120.0	120.0	120.0
36"	54"	60"	115.9	115.9	115.9	115.9	120.0	150.0	120.0	150.0	120.0	150.0	120.0	150.0
42"	63"		102.3	102.3	102.3	102.3	120.0	150.0	120.0	150.0	120.0	150.0	120.0	150.0
48"	72"		92.3	92.3	92.3	92.3	120.0	138.5	120.0	150.0	120.0	150.0	120.0	150.0
54"	81"		84.7	84.7	84.7	84.7	120.0	127.1	120.0	150.0	120.0	150.0	120.0	150.0
60"	90"		78.8	78.8	78.8	78.8	118.2	118.2	120.0	150.0	120.0	150.0	120.0	150.0
66"	99"		74.1	74.1	74.1	74.1	100.0	100.0	120.0	120.0	120.0	120.0	120.0	120.0
72"	108"		70.4	70.4	70.4	70.4	100.0	100.0	120.0	120.0	120.0	120.0	120.0	120.0
78"	117"		67.3	67.3	67.3	67.3	100.0	100.0	120.0	120.0	117.7	117.7	120.0	120.0
84"	126"		64.9	64.9	64.9	64.9	97.4	97.4	120.0	120.0	110.6	110.6	120.0	120.0
36"	54"	66"	103.7	103.7	103.7	103.7	120.0	150.0	120.0	150.0	120.0	150.0	120.0	150.0
42"	63"		91.3	91.3	91.3	91.3	120.0	136.9	120.0	150.0	120.0	150.0	120.0	150.0
48"	72"		82.1	82.1	82.1	82.1	120.0	123.1	120.0	150.0	120.0	150.0	120.0	150.0
54"	81"		75.0	75.0	75.0	75.0	112.6	112.6	120.0	150.0	120.0	150.0	120.0	150.0
60"	90"		69.5	69.5	69.5	69.5	100.0	100.0	120.0	120.0	120.0	120.0	120.0	120.0
66"	99"		65.1	65.1	65.1	65.1	97.7	97.7	120.0	120.0	120.0	120.0	120.0	120.0
72"	108"		61.6	61.6	61.6	61.6	92.3	92.3	120.0	120.0	116.7	116.7	120.0	120.0
78"	117"		58.7	58.7	58.7	58.7	88.0	88.0	117.3	117.3	107.3	107.3	117.3	117.3
84"	126"		56.3	56.3	56.3	56.3	84.4	84.4	112.6	112.6	100.9	100.9	112.6	112.6
36"	54"	72"	93.8	93.8	93.8	93.8	120.0	140.7	120.0	150.0	120.0	150.0	120.0	150.0
42"	63"		82.4	82.4	82.4	82.4	120.0	123.5	120.0	150.0	120.0	150.0	120.0	150.0
48"	72"		73.9	73.9	73.9	73.9	110.8	110.8	120.0	147.7	120.0	147.7	120.0	147.7
54"	81"		67.3	67.3	67.3	67.3	100.0	100.0	120.0	120.0	120.0	120.0	120.0	120.0
60"	90"		62.2	62.2	62.2	62.2	93.3	93.3	120.0	120.0	120.0	120.0	120.0	120.0
66"	99"		58.1	58.1	58.1	58.1	87.1	87.1	116.2	116.2	116.2	116.2	116.2	116.2
72"	108"		54.7	54.7	54.7	54.7	82.1	82.1	109.4	109.4	107.5	107.5	109.4	109.4
78"	117"		52.0	52.0	52.0	52.0	77.9	77.9	103.9	103.9	98.2	98.2	103.9	103.9
36"	54"	76"	88.2	88.2	88.2	88.2	120.0	132.3	120.0	150.0	120.0	150.0	120.0	150.0
42"	63"		77.3	77.3	77.3	77.3	116.0	116.0	120.0	150.0	120.0	150.0	120.0	150.0
48"	72"		69.3	69.3	69.3	69.3	100.0	100.0	120.0	120.0	120.0	120.0	120.0	120.0
54"	81"		63.0	63.0	63.0	63.0	94.6	94.6	120.0	120.0	120.0	120.0	120.0	120.0
60"	90"		58.1	58.1	58.1	58.1	87.2	87.2	116.3	116.3	116.3	116.3	116.3	116.3
66"	99"		54.2	54.2	54.2	54.2	81.3	81.3	108.4	108.4	108.4	108.4	108.4	108.4
72"	108"		50.8	50.8	50.9	50.9	76.4	76.4	101.7	101.7	101.9	101.9	101.9	101.9

WINDOW DIMS.			INTERLOCKS WITHOUT REINFORCING						INTERLOCKS WITH REINFORCING					
WIDTH		HEIGHT	GLASS TYPE 1		GLASS TYPE 4		GLASS TYPES 2, 3 & 5		GLASS TYPE 2		GLASS TYPE 3		GLASS TYPE 5	
2 PANEL	3 PANEL		EXT.(+)	INT.(−)	EXT.(+)	INT.(−)	EXT.(+)	INT.(−)	EXT.(+)	INT.(−)	EXT.(+)	INT.(−)	EXT.(+)	INT.(−)
26−1/2"	39−3/4"	38−3/8"	120.0	150.0	120.0	150.0	120.0	150.0	120.0	150.0	120.0	150.0	120.0	150.0
37"	55−1/2"		120.0	150.0	120.0	150.0	120.0	150.0	120.0	150.0	120.0	150.0	120.0	150.0
53−1/8"	79−11/16"		120.0	150.0	120.0	150.0	120.0	150.0	120.0	150.0	120.0	150.0	120.0	150.0
74"	111"		120.0	131.8	120.0	144.7	120.0	150.0	120.0	150.0	120.0	150.0	120.0	150.0
79−1/2"	119−1/4"		120.0	120.2	120.0	134.1	120.0	150.0	120.0	150.0	120.0	150.0	120.0	150.0
106−1/4"	159−3/8"		80.7	80.7	85.0	85.0	100.0	100.0	120.0	120.0	120.0	120.0	120.0	120.0
26−1/2"	39−3/4"	50−5/8"	120.0	150.0	120.0	150.0	120.0	150.0	120.0	150.0	120.0	150.0	120.0	150.0
37"	55−1/2"		120.0	139.0	120.0	139.0	120.0	150.0	120.0	150.0	120.0	150.0	120.0	150.0
53−1/8"	79−11/16"		107.2	107.2	107.2	107.2	120.0	150.0	120.0	150.0	120.0	150.0	120.0	150.0
74"	111"		85.0	85.0	85.0	85.0	100.0	100.0	120.0	120.0	120.0	120.0	120.0	120.0
79−1/2"	119−1/4"		83.2	83.2	85.0	85.0	100.0	100.0	120.0	120.0	120.0	120.0	120.0	120.0
106−1/4"	159−3/8"		66.0	66.0	73.6	73.6	100.0	100.0	120.0	120.0	107.6	107.6	120.0	120.0
26−1/2"	39−3/4"	63"	120.0	142.4	120.0	142.4	120.0	150.0	120.0	150.0	120.0	150.0	120.0	150.0
37"	55−1/2"		107.0	107.0	107.0	107.0	120.0	150.0	120.0	150.0	120.0	150.0	120.0	150.0
53−1/8"	79−11/16"		80.5	80.5	80.5	80.5	120.0	120.8	120.0	150.0	120.0	150.0	120.0	150.0
74"	111"		64.6	64.6	64.6	64.6	96.9	96.9	120.0	120.0	118.3	118.3	120.0	120.0
79−1/2"	119−1/4"		62.1	62.1	62.1	62.1	93.1	93.1	120.0	120.0	110.4	110.4	120.0	120.0
26−1/2"	39−3/4"	72"	120.0	122.8	120.0	122.8	120.0	150.0	120.0	150.0	120.0	150.0	120.0	150.0
37"	55−1/2"		91.6	91.6	91.6	91.6	120.0	137.5	120.0	150.0	120.0	150.0	120.0	150.0
53−1/8"	79−11/16"		68.2	68.2	68.2	68.2	100.0	100.0	120.0	120.0	120.0	120.0	120.0	120.0
74"	111"		53.7	53.7	53.7	53.7	80.6	80.6	107.5	107.5	103.9	103.9	107.5	107.5
26−1/2"	39−3/4"	76"	115.7	115.7	115.7	115.7	120.0	150.0	120.0	150.0	120.0	150.0	120.0	150.0
37"	55−1/2"		86.1	86.1	86.1	86.1	120.0	129.2	120.0	150.0	120.0	150.0	120.0	150.0
53−1/8"	79−11/16"		63.9	63.9	63.9	63.9	95.8	95.8	120.0	120.0	120.0	120.0	120.0	120.0
74"	111"		50.0	50.0	50.0	50.0	75.0	75.0	100.0	100.0	98.8	98.8	100.0	100.0

PERFORMANCE VALUES
EQUAL PANELS

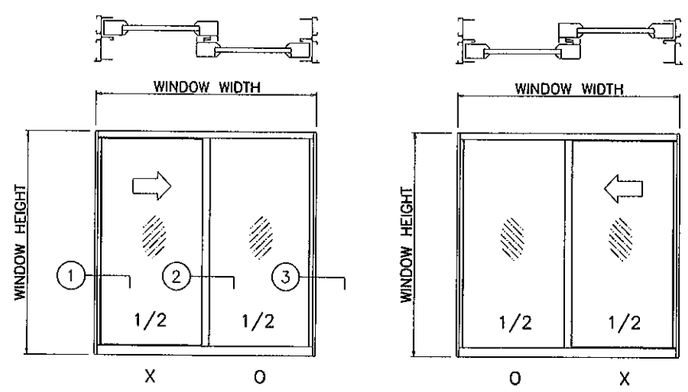

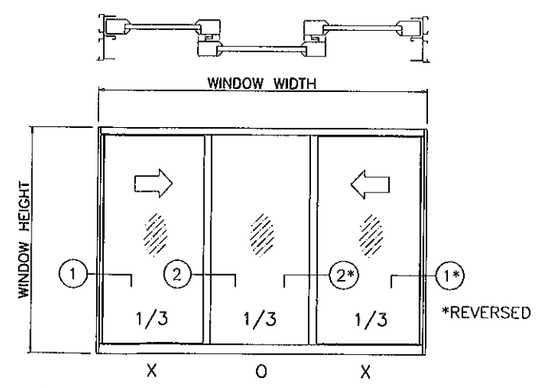

All values shown are Design PSF (Pounds per Square Foot)

VALUES FOR EXTERIOR LOADS(+) SHOWN ARE
FOR SILL WITH WATERBAR ADAPTER
FOR WINDOWS WITHOUT WATERBAR ADAPTER
LIMIT EXTERIOR(+) LOADS TO 80.0 PSF

NOTE:
GLASS CAPACITIES ON THIS SHEET ARE
BASED ON ASTM E1300−02/04 (3 SEC. GUSTS)
AND FLORIDA BUILDING COMMISSION
DECLARATORY STATEMENT DCA05−DEC−219

MAXIMUM VENT SIZE IS 18.7 SQ. FT.
AND MAXIMUM VENT HEIGHT IS 71 11/16"

Engr: JAVAD AHMAD
CIVIL
FLA. PE # 70592
C.A.N. 3938

FEB 01 2012

PRODUCT REVISED
as complying with the Florida
Building Code
Acceptance No 12-0214.08
Expiration Date 06/10/2014
By
Miami Dade Product Control

AL-FAROOQ CORPORATION
ENGINEERS & PRODUCT DEVELOPMENT
1235 S.W. 87 AVE
MIAMI, FLORIDA 33174
TEL (305) 264-8100 FAX. (305) 262-6978
COMP-ANL\W09-13CGI

SERIES-375 ALUM. HORIZ. ROLLING WDW. (L.M.I.)

CGI WINDOWS & DOORS
10100 N.W. 25TH STREET
DORAL, FL. 33172
TEL. (305) 593-6590 FAX. (305) 593-6592

revisions:

no	date	by	description
A	01.06.12		NO CHANGE THIS SHEET

date: 02-27-09
scale: −
dr. by: −
chk. by:

drawing no.
W09-13

WINDOW DIMS.			ANCHORS TYPE 'A'	ANCHORS TYPE 'B'	ANCHORS TYPE 'C'
WIDTH		HEIGHT	EXT. (+) INT. (−)	EXT. (+) INT. (−)	EXT. (+) INT. (−)
2 PANEL	3 PANEL				
36"	54"	36"	150.0	150.0	150.0
42"	63"		150.0	150.0	150.0
48"	72"		150.0	150.0	150.0
54"	81"		144.6	150.0	150.0
60"	90"		130.1	150.0	150.0
66"	99"		118.3	150.0	150.0
72"	108"		108.4	150.0	150.0
78"	117"		100.1	150.0	150.0
84"	126"		93.0	150.0	150.0
36"	54"	48"	150.0	150.0	150.0
42"	63"		139.4	150.0	150.0
48"	72"		122.0	150.0	150.0
54"	81"		108.4	150.0	150.0
60"	90"		97.6	150.0	150.0
66"	99"		88.7	150.0	150.0
72"	108"		81.3	150.0	150.0
78"	117"		75.1	120.0	120.0
84"	126"		69.7	120.0	120.0
36"	54"	54"	144.6	150.0	150.0
42"	63"		123.9	150.0	150.0
48"	72"		108.4	150.0	150.0
54"	81"		96.4	150.0	150.0
60"	90"		86.8	150.0	150.0
66"	99"		78.9	150.0	150.0
72"	108"		72.3	120.0	120.0
78"	117"		66.7	120.0	120.0
84"	126"		62.0	120.0	120.0
36"	54"	60"	130.1	150.0	150.0
42"	63"		111.5	150.0	150.0
48"	72"		97.6	150.0	150.0
54"	81"		86.8	150.0	150.0
60"	90"		78.1	150.0	150.0
66"	99"		71.0	120.0	120.0
72"	108"		65.1	120.0	120.0
78"	117"		60.1	120.0	120.0
84"	126"		55.8	111.5	120.0
36"	54"	66"	118.3	150.0	150.0
42"	63"		101.4	150.0	150.0
48"	72"		88.7	150.0	150.0
54"	81"		78.9	150.0	150.0
60"	90"		71.0	120.0	120.0
66"	99"		64.5	120.0	120.0
72"	108"		59.2	118.3	120.0
78"	117"		54.6	109.2	120.0
84"	126"		50.7	101.4	120.0
36"	54"	72"	108.4	150.0	150.0
42"	63"		93.0	150.0	150.0
48"	72"		81.3	150.0	150.0
54"	81"		72.3	120.0	120.0
60"	90"		65.1	120.0	120.0
66"	99"		59.2	118.3	120.0
72"	108"		54.2	108.4	120.0
78"	117"		50.1	100.1	120.0
36"	54"	76"	102.7	150.0	150.0
42"	63"		88.1	150.0	150.0
48"	72"		77.1	120.0	120.0
54"	81"		68.5	120.0	120.0
60"	90"		61.6	120.0	120.0
66"	99"		56.0	112.1	120.0
72"	108"		51.4	102.7	120.0

WINDOW DIMS.			ANCHORS TYPE 'A'	ANCHORS TYPE 'B'	ANCHORS TYPE 'C'
WIDTH		HEIGHT	EXT. (+) INT. (−)	EXT. (+) INT. (−)	EXT. (+) INT. (−)
2 PANEL	3 PANEL				
26-1/2"	39-3/4"	38-3/8"	150.0	150.0	150.0
37"	55-1/2"		150.0	150.0	150.0
53-1/8"	79-11/16"		137.9	150.0	150.0
74"	111"		99.0	150.0	150.0
79-1/2"	119-1/4"		92.1	150.0	150.0
106-1/4"	159-3/8"		68.9	120.0	120.0
26-1/2"	39-3/4"	50-5/8"	150.0	150.0	150.0
37"	55-1/2"		150.0	150.0	150.0
53-1/8"	79-11/16"		104.5	150.0	150.0
74"	111"		75.0	120.0	120.0
79-1/2"	119-1/4"		69.8	120.0	120.0
106-1/4"	159-3/8"		52.3	104.5	120.0
26-1/2"	39-3/4"	63"	150.0	150.0	150.0
37"	55-1/2"		120.6	150.0	150.0
53-1/8"	79-11/16"		84.0	150.0	150.0
74"	111"		60.3	120.0	120.0
79-1/2"	119-1/4"		56.1	112.2	120.0
26-1/2"	39-3/4"	72"	147.3	150.0	150.0
37"	55-1/2"		105.5	150.0	150.0
53-1/8"	79-11/16"		73.5	120.0	120.0
74"	111"		52.8	105.5	120.0
26-1/2"	39-3/4"	76"	139.6	150.0	150.0
37"	55-1/2"		100.0	150.0	150.0
53-1/8"	79-11/16"		69.6	120.0	120.0
74"	111"		50.0	100.0	120.0

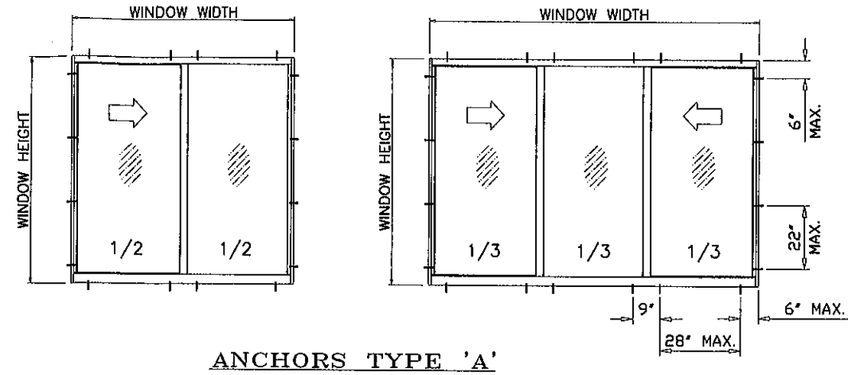

ANCHORS TYPE 'A'

2 ANCHORS AT MTG. STILE ENDS
28" MAX. SPACING BETWEEN ANCHORS

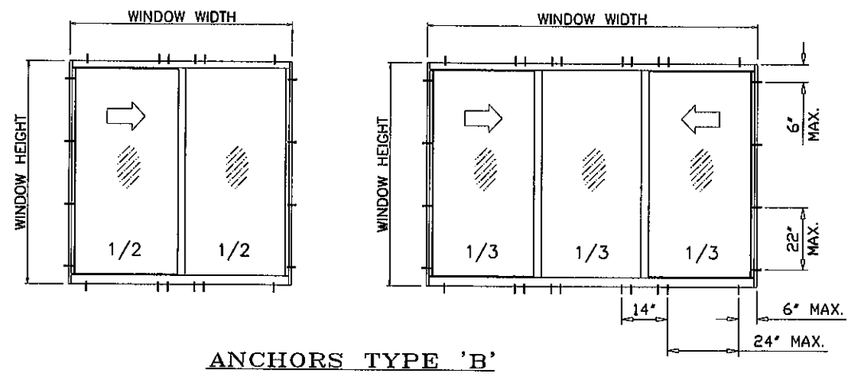

ANCHORS TYPE 'B'

4 ANCHORS AT MTG. STILE ENDS
24" MAX. SPACING BETWEEN ANCHORS

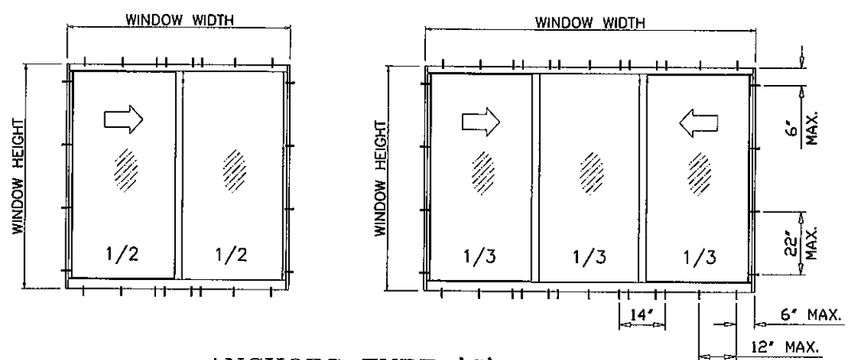

ANCHORS TYPE 'C'

4 ANCHORS AT MTG. STILE ENDS
12" MAX. SPACING BETWEEN ANCHORS

NOTE:
ANCHOR SPACING TO BE AS LISTED ABOVE
1/2" MAX. SHIM SPACE FOR EQUAL LEG FRAMES ONLY

Engr: JAVAD AHMAD
CIVIL
FLA. PE # 70592
C.A.N. 3538

FEB 01 2012

PRODUCT REVISED
as complying with the Florida
Building Code 12-0214.08
Acceptance No
Expiration Date 06/10/2014
By
Miami Dade Product Control

AL-FAROOQ CORPORATION
ENGINEERS & PRODUCT DEVELOPMENT
1235 S.W. 87 AVE
MIAMI, FLORIDA 33174
TEL (305) 264-8100 FAX. (305) 262-6978

COMP-ANL\W09-13CGI

SERIES-375 ALUM. HORIZ. ROLLING WDW. (L.M.I.)

CGI WINDOWS & DOORS
10100 N.W. 25TH STREET
DORAL, FL. 33172
TEL. (305) 593-6590 FAX. (305) 593-6592

revisions:

no	date	by	description
A	01.06.12		NO CHANGE THIS SHEET

date: 02-27-09
scale: –
dr. by: –
chk. by:

drawing no.
W09-13

sheet 6 of 16

WINDOW DIMS.			ANCHORS TYPE 'A'	ANCHORS TYPE 'B'	ANCHORS TYPE 'C'
WIDTH		HEIGHT	EXT. (+) INT. (−)	EXT. (+) INT. (−)	EXT. (+) INT. (−)
2 PANEL	3 PANEL				
36"	54"	36"	150.0	150.0	150.0
42"	63"		150.0	150.0	150.0
48"	72"		150.0	150.0	150.0
54"	81"		143.4	150.0	150.0
60"	90"		129.1	150.0	150.0
66"	99"		117.3	150.0	150.0
72"	108"		107.6	150.0	150.0
78"	117"		99.3	150.0	150.0
84"	126"		92.2	150.0	150.0
36"	54"	48"	150.0	150.0	150.0
42"	63"		138.3	150.0	150.0
48"	72"		121.0	150.0	150.0
54"	81"		107.6	150.0	150.0
60"	90"		96.8	150.0	150.0
66"	99"		88.0	150.0	150.0
72"	108"		80.7	150.0	150.0
78"	117"		74.5	120.0	120.0
84"	126"		69.1	120.0	120.0
36"	54"	54"	143.4	150.0	150.0
42"	63"		122.9	150.0	150.0
48"	72"		107.6	150.0	150.0
54"	81"		95.6	150.0	150.0
60"	90"		86.0	150.0	150.0
66"	99"		78.2	150.0	150.0
72"	108"		71.7	120.0	120.0
78"	117"		66.2	120.0	120.0
84"	126"		61.5	120.0	120.0
36"	54"	60"	129.1	150.0	150.0
42"	63"		110.6	150.0	150.0
48"	72"		96.8	150.0	150.0
54"	81"		86.0	150.0	150.0
60"	90"		77.4	150.0	150.0
66"	99"		70.4	120.0	120.0
72"	108"		64.5	120.0	120.0
78"	117"		59.6	119.1	120.0
84"	126"		55.3	110.6	120.0
36"	54"	66"	117.3	150.0	150.0
42"	63"		100.6	150.0	150.0
48"	72"		88.0	150.0	150.0
54"	81"		78.2	150.0	150.0
60"	90"		70.4	120.0	120.0
66"	99"		64.0	120.0	120.0
72"	108"		58.7	117.3	120.0
78"	117"		54.2	108.3	120.0
84"	126"		50.3	100.6	120.0
36"	54"	72"	107.6	150.0	150.0
42"	63"		92.2	150.0	150.0
48"	72"		80.7	150.0	150.0
54"	81"		71.7	120.0	120.0
60"	90"		64.5	120.0	120.0
66"	99"		58.7	117.3	120.0
72"	108"		53.8	107.6	120.0
78"	117"		49.6	99.3	120.0
36"	54"	76"	101.9	150.0	150.0
42"	63"		87.3	150.0	150.0
48"	72"		76.4	120.0	120.0
54"	81"		67.9	120.0	120.0
60"	90"		61.1	120.0	120.0
66"	99"		55.6	111.2	120.0
72"	108"		50.9	101.9	120.0

WINDOW DIMS.			ANCHORS TYPE 'A'	ANCHORS TYPE 'B'	ANCHORS TYPE 'C'
WIDTH		HEIGHT	EXT. (+) INT. (−)	EXT. (+) INT. (−)	EXT. (+) INT. (−)
2 PANEL	3 PANEL				
26-1/2"	39-3/4"	38-3/8"	150.0	150.0	150.0
37"	55-1/2"		150.0	150.0	150.0
53-1/8"	79-11/16"		136.7	150.0	150.0
74"	111"		98.2	150.0	150.0
79-1/2"	119-1/4"		91.2	150.0	150.0
106-1/4"	159-3/8"		68.4	120.0	120.0
26-1/2"	39-3/4"	50-5/8"	150.0	150.0	150.0
37"	55-1/2"		148.8	150.0	150.0
53-1/8"	79-11/16"		103.7	150.0	150.0
74"	111"		74.4	120.0	120.0
79-1/2"	119-1/4"		69.1	120.0	120.0
106-1/4"	159-3/8"		51.8	103.7	120.0
26-1/2"	39-3/4"	63"	150.0	150.0	150.0
37"	55-1/2"		119.6	150.0	150.0
53-1/8"	79-11/16"		83.3	150.0	150.0
74"	111"		59.8	119.6	120.0
79-1/2"	119-1/4"		55.5	111.1	120.0
26-1/2"	39-3/4"	72"	146.1	150.0	150.0
37"	55-1/2"		104.6	150.0	150.0
53-1/8"	79-11/16"		72.9	120.0	120.0
74"	111"		52.3	104.6	120.0
26-1/2"	39-3/4"	76"	138.4	150.0	150.0
37"	55-1/2"		99.1	150.0	150.0
53-1/8"	79-11/16"		69.0	120.0	120.0
74"	111"		49.6	99.1	120.0

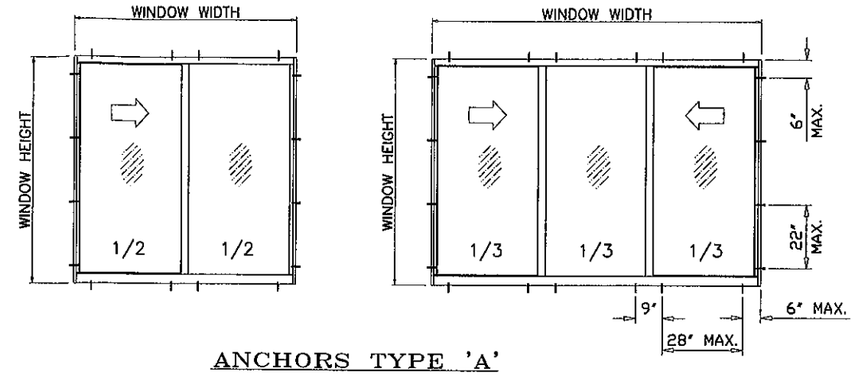

ANCHORS TYPE 'A'

2 ANCHORS AT MTG. STILE ENDS
28" MAX. SPACING BETWEEN ANCHORS

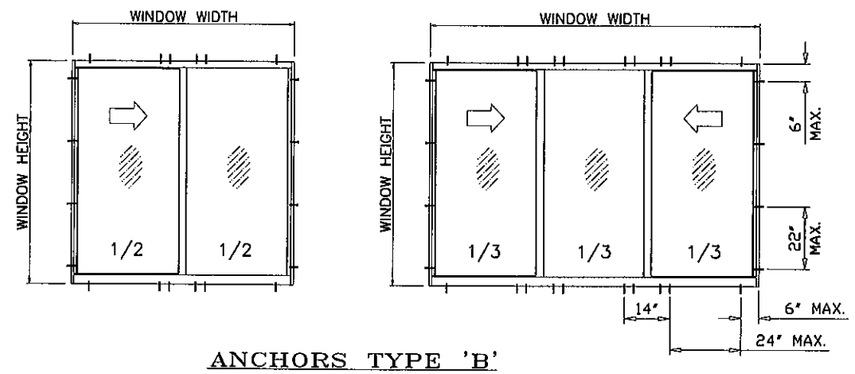

ANCHORS TYPE 'B'

4 ANCHORS AT MTG. STILE ENDS
24" MAX. SPACING BETWEEN ANCHORS

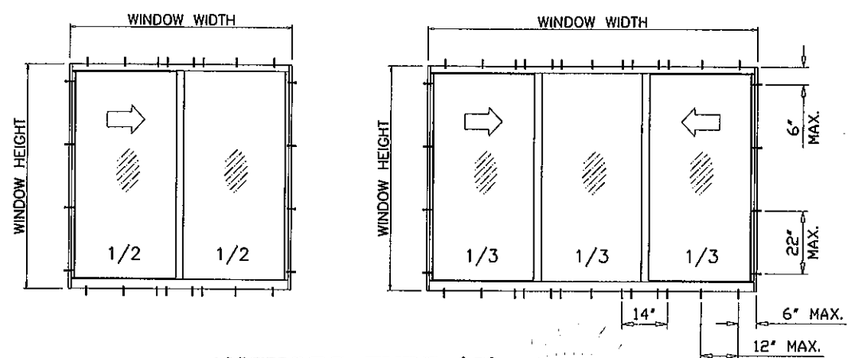

ANCHORS TYPE 'C'

4 ANCHORS AT MTG. STILE ENDS
12" MAX. SPACING BETWEEN ANCHORS

NOTE:
ANCHOR SPACING TO BE AS LISTED ABOVE
3/8" MAX. SHIM SPACE FOR FLANGE AND EQUAL LEG FRAMES

1/4" MAX. SHIM SPACE FOR INSTALLATIONS INTO METAL STRUCTURES

Engr: JAVAD AHMAD
CIVIL
FLA. PE # 70592
C.A.N. 3538

FEB 01 2012

PRODUCT REVISED
as complying with the Florida
Building Code 12-0214.08
Acceptance No
Expiration Date 06/10/2014
By
Miami Dade Product Control

AL-FAROOQ CORPORATION
ENGINEERS & PRODUCT DEVELOPMENT
1235 S.W. 87 AVE
MIAMI, FLORIDA 33174
TEL. (305) 264-8100 FAX. (305) 262-6978

COMP-ANL\W09-13CGI

SERIES-375 ALUM. HORIZ. ROLLING WDW. (L.M.I.)

CGI WINDOWS & DOORS
10100 N.W. 25TH STREET
DORAL, FL. 33172
TEL. (305) 593-6590 FAX. (305) 593-6592

revisions:

no	date	by	description
A	01.06.12		CHART REV.

date: 02-27-09
scale: -
dr. by: -
chk. by:

drawing no.
W09-13

WINDOW DIMS.			INTERLOCKS WITHOUT REINFORCING						INTERLOCKS WITH REINFORCING					
WIDTH		HEIGHT	GLASS TYPE 1		GLASS TYPE 4		GLASS TYPES 2, 3 & 5		GLASS TYPE 2		GLASS TYPE 3		GLASS TYPE 5	
2 PANEL	3 PANEL		EXT.(+)	INT.(−)	EXT.(+)	INT.(−)	EXT.(+)	INT.(−)	EXT.(+)	INT.(−)	EXT.(+)	INT.(−)	EXT.(+)	INT.(−)
36"	48"	36"	120.0	150.0	120.0	150.0	120.0	150.0	120.0	150.0	120.0	150.0	120.0	150.0
42"	56"		120.0	150.0	120.0	150.0	120.0	150.0	120.0	150.0	120.0	150.0	120.0	150.0
48"	64"		120.0	150.0	120.0	150.0	120.0	150.0	120.0	150.0	120.0	150.0	120.0	150.0
54"	72"		120.0	150.0	120.0	150.0	120.0	150.0	120.0	150.0	120.0	150.0	120.0	150.0
60"	80"		120.0	135.3	120.0	150.0	120.0	150.0	120.0	150.0	120.0	150.0	120.0	150.0
66"	88"		118.4	118.4	120.0	132.0	120.0	150.0	120.0	150.0	120.0	150.0	120.0	150.0
72"	96"		104.5	104.5	116.6	116.6	120.0	150.0	120.0	150.0	120.0	150.0	120.0	150.0
78"	104"		85.0	85.0	85.0	85.0	100.0	100.0	120.0	120.0	120.0	120.0	120.0	120.0
84"	112"		83.8	83.8	85.0	85.0	100.0	100.0	120.0	120.0	120.0	120.0	120.0	120.0
96"	128"		71.9	71.9	80.2	80.2	100.0	100.0	120.0	120.0	120.0	120.0	120.0	120.0
108"	144"		61.5	61.5	68.6	68.6	100.0	100.0	120.0	120.0	120.0	120.0	120.0	120.0
36"	48"	48"	120.0	150.0	120.0	150.0	120.0	150.0	120.0	150.0	120.0	150.0	120.0	150.0
42"	56"		120.0	130.6	120.0	139.4	120.0	150.0	120.0	150.0	120.0	150.0	120.0	150.0
48"	64"		116.1	116.1	120.0	127.9	120.0	150.0	120.0	150.0	120.0	150.0	120.0	150.0
54"	72"		105.6	105.6	117.7	117.7	120.0	150.0	120.0	150.0	120.0	150.0	120.0	150.0
60"	80"		85.0	85.0	85.0	85.0	100.0	100.0	120.0	120.0	120.0	120.0	120.0	120.0
66"	88"		83.9	83.9	85.0	85.0	100.0	100.0	120.0	120.0	120.0	120.0	120.0	120.0
72"	96"		77.6	77.6	85.0	85.0	100.0	100.0	120.0	120.0	120.0	120.0	120.0	120.0
78"	104"		72.4	72.4	80.8	80.8	100.0	100.0	120.0	120.0	118.4	118.4	120.0	120.0
84"	112"		67.5	67.5	75.3	75.3	100.0	100.0	120.0	120.0	110.4	110.4	120.0	120.0
36"	48"	54"	120.0	134.3	120.0	134.3	120.0	150.0	120.0	150.0	120.0	150.0	120.0	150.0
42"	56"		111.5	111.5	119.7	119.7	120.0	150.0	120.0	150.0	120.0	150.0	120.0	150.0
48"	64"		97.5	97.5	108.7	108.7	120.0	150.0	120.0	150.0	120.0	150.0	120.0	150.0
54"	72"		85.0	85.0	85.0	85.0	100.0	100.0	120.0	120.0	120.0	120.0	120.0	120.0
60"	80"		80.1	80.1	85.0	85.0	100.0	100.0	120.0	120.0	120.0	120.0	120.0	120.0
66"	88"		74.7	74.7	83.3	83.3	100.0	100.0	120.0	120.0	120.0	120.0	120.0	120.0
72"	96"		70.0	70.0	78.1	78.1	100.0	100.0	120.0	120.0	114.5	114.5	120.0	120.0
78"	104"		65.6	65.6	73.2	73.2	100.0	100.0	120.0	120.0	107.9	107.9	120.0	120.0
36"	48"	60"	118.2	118.2	118.2	118.2	120.0	150.0	120.0	150.0	120.0	150.0	120.0	150.0
42"	56"		98.7	98.7	104.8	104.8	120.0	150.0	120.0	150.0	120.0	150.0	120.0	150.0
48"	64"		84.0	84.0	85.0	85.0	100.0	100.0	120.0	120.0	120.0	120.0	120.0	120.0
54"	72"		76.9	76.9	85.0	85.0	100.0	100.0	120.0	120.0	120.0	120.0	120.0	120.0
60"	80"		70.5	70.5	78.6	78.6	100.0	100.0	120.0	120.0	120.0	120.0	120.0	120.0
66"	88"		66.4	66.4	74.1	74.1	100.0	100.0	120.0	120.0	110.6	110.6	120.0	120.0
36"	48"	66"	105.5	105.5	105.5	105.5	120.0	150.0	120.0	150.0	120.0	150.0	120.0	150.0
42"	56"		85.0	85.0	85.0	85.0	100.0	100.0	120.0	120.0	120.0	120.0	120.0	120.0
48"	64"		77.5	77.5	84.2	84.2	100.0	100.0	120.0	120.0	120.0	120.0	120.0	120.0
54"	72"		68.3	68.3	76.2	76.2	100.0	100.0	120.0	120.0	120.0	120.0	120.0	120.0
60"	80"		62.3	62.3	69.5	69.5	100.0	100.0	120.0	120.0	110.2	110.2	120.0	120.0
36"	48"	72"	95.3	95.3	95.3	95.3	120.0	143.0	120.0	150.0	120.0	150.0	120.0	150.0
42"	56"		80.1	80.1	84.0	84.0	100.0	100.0	120.0	120.0	120.0	120.0	120.0	120.0
48"	64"		69.4	69.4	75.6	75.6	100.0	100.0	120.0	120.0	120.0	120.0	120.0	120.0
54"	72"		60.8	60.8	67.8	67.8	100.0	100.0	120.0	120.0	116.7	116.7	120.0	120.0
36"	48"	76"	85.0	85.0	85.0	85.0	100.0	100.0	120.0	120.0	120.0	120.0	120.0	120.0
42"	56"		78.7	78.7	78.7	78.7	100.0	100.0	120.0	120.0	120.0	120.0	120.0	120.0
48"	64"		65.0	65.0	70.7	70.7	100.0	100.0	120.0	120.0	120.0	120.0	120.0	120.0
54"	72"		56.6	56.6	63.1	63.1	96.9	96.9	113.1	113.1	112.0	112.0	120.0	120.0

WINDOW DIMS.			INTERLOCKS WITHOUT REINFORCING						INTERLOCKS WITH REINFORCING					
WIDTH		HEIGHT	GLASS TYPE 1		GLASS TYPE 4		GLASS TYPES 2, 3 & 5		GLASS TYPE 2		GLASS TYPE 3		GLASS TYPE 5	
2 PANEL	3 PANEL		EXT.(+)	INT.(−)	EXT.(+)	INT.(−)	EXT.(+)	INT.(−)	EXT.(+)	INT.(−)	EXT.(+)	INT.(−)	EXT.(+)	INT.(−)
26-1/2"	35-5/16"	38-3/8"	120.0	150.0	120.0	150.0	120.0	150.0	120.0	150.0	120.0	150.0	120.0	150.0
37"	49-5/16"		120.0	150.0	120.0	150.0	120.0	150.0	120.0	150.0	120.0	150.0	120.0	150.0
53-1/8"	71"		120.0	147.2	120.0	150.0	120.0	150.0	120.0	150.0	120.0	150.0	120.0	150.0
74"	99"		85.0	85.0	85.0	85.0	100.0	100.0	120.0	120.0	120.0	120.0	120.0	120.0
79-1/2"	106"		84.6	84.6	85.0	85.0	100.0	100.0	120.0	120.0	120.0	120.0	120.0	120.0
106-1/4"	142"		58.8	58.8	65.5	65.5	100.0	100.0	117.5	117.5	111.0	111.0	120.0	120.0
26-1/2"	35-5/16"	50-5/8"	120.0	150.0	120.0	150.0	120.0	150.0	120.0	150.0	120.0	150.0	120.0	150.0
37"	49-5/16"		120.0	142.5	120.0	142.5	120.0	150.0	120.0	150.0	120.0	150.0	120.0	150.0
53-1/8"	71"		98.8	98.8	110.2	110.2	120.0	150.0	120.0	150.0	120.0	150.0	120.0	150.0
74"	99"		72.0	72.0	80.3	80.3	100.0	100.0	120.0	120.0	119.0	119.0	120.0	120.0
79-1/2"	106"		68.2	68.2	76.1	76.1	100.0	100.0	120.0	120.0	111.7	111.7	120.0	120.0
26-1/2"	35-5/16"	63"	120.0	144.3	120.0	144.3	120.0	150.0	120.0	150.0	120.0	150.0	120.0	150.0
37"	49-5/16"		109.1	109.1	109.1	109.1	120.0	150.0	120.0	150.0	120.0	150.0	120.0	150.0
53-1/8"	71"		73.4	73.4	81.9	81.9	100.0	100.0	120.0	120.0	120.0	120.0	120.0	120.0
26-1/2"	35-5/16"	72"	120.0	124.2	120.0	124.2	120.0	150.0	120.0	150.0	120.0	150.0	120.0	150.0
37"	49-5/16"		93.2	93.2	93.2	93.2	120.0	139.7	120.0	150.0	120.0	150.0	120.0	150.0
53-1/8"	71"		61.6	61.6	68.7	68.7	100.0	100.0	120.0	120.0	119.4	119.4	120.0	120.0
26-1/2"	35-5/16"	76"	117.0	117.0	117.0	117.0	120.0	150.0	120.0	150.0	120.0	150.0	120.0	150.0
37"	49-5/16"		85.0	85.0	85.0	85.0	100.0	100.0	120.0	120.0	120.0	120.0	120.0	120.0
53-1/8"	71"		57.4	57.4	64.0	64.0	97.9	97.9	114.7	114.7	114.7	114.7	120.0	120.0

PERFORMANCE VALUES
UNEQUAL PANELS

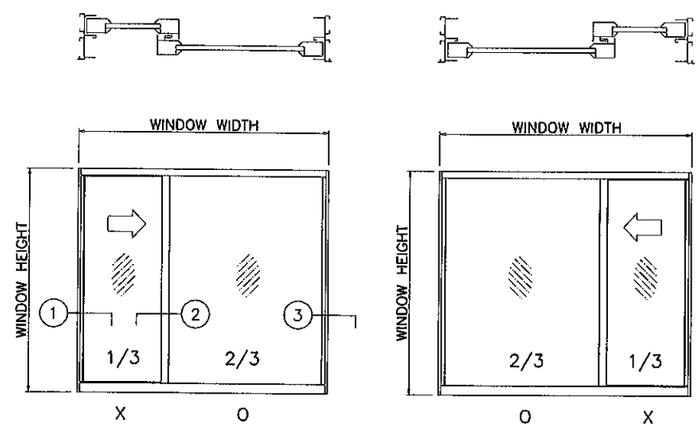

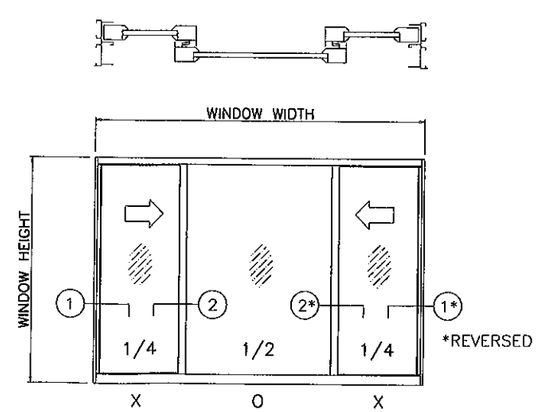

All values shown are Design PSF (Pounds per Square Foot)

VALUES FOR EXTERIOR LOADS(+) SHOWN ARE
FOR SILL WITH WATERBAR ADAPTER
FOR WINDOWS WITHOUT WATERBAR ADAPTER
LIMIT EXTERIOR(+) LOADS TO 80.0 PSF

NOTE:
GLASS CAPACITIES ON THIS SHEET ARE
BASED ON ASTM E1300-02/04 (3 SEC. GUSTS)
AND FLORIDA BUILDING COMMISSION
DECLARATORY STATEMENT DCA05-DEC-219

MAXIMUM VENT SIZE IS 18.7 SQ. FT.
AND MAXIMUM VENT HEIGHT IS 71 11/16"

Engr: JAVAD AHMAD
CIVIL
FLA. PE # 70592
C.A.N. 3538

FEB 01 2012

PRODUCT REVISED
as complying with the Florida
Building Code
Acceptance No 12-0214.08
Expiration Date 06/10/2014
By
Miami Dade Product Control

AL-FAROOQ CORPORATION
ENGINEERS & PRODUCT DEVELOPMENT
1235 S.W. 87 AVE
MIAMI, FLORIDA 33174
TEL (305) 264-8100 FAX. (305) 262-6978
COMP-ANL\W09-13CGI

SERIES-375 ALUM. HORIZ. ROLLING WDW. (L.M.I.)

CGI WINDOWS & DOORS
10100 N.W. 25TH STREET
DORAL, FL. 33172
TEL. (305) 593-6590 FAX. (305) 593-6592

revisions:

no	date	by	description
A	01.06.12		NO CHANGE THIS SHEET

date: 02-27-09
scale: -
dr. by: -
chk. by:

drawing no.
W09-13

WINDOW DIMS.			ANCHORS TYPE 'A'	ANCHORS TYPE 'B'
WIDTH		HEIGHT	EXT. (+)	EXT. (+)
2 PANEL	3 PANEL		INT. (-)	INT. (-)
36"	48"	36"	150.0	150.0
42"	56"		150.0	150.0
48"	64"		150.0	150.0
54"	72"		144.6	150.0
60"	80"		130.1	150.0
66"	88"		118.3	150.0
72"	96"		108.4	150.0
78"	104"		100.1	120.0
84"	112"		93.0	120.0
96"	128"		81.3	120.0
108"	144"		72.3	120.0
36"	48"	48"	150.0	150.0
42"	56"		139.4	150.0
48"	64"		122.0	150.0
54"	72"		108.4	150.0
60"	80"		97.6	120.0
66"	88"		88.7	120.0
72"	96"		81.3	120.0
78"	104"		75.1	120.0
84"	112"		69.7	120.0
36"	48"	54"	144.6	150.0
42"	56"		123.9	150.0
48"	64"		108.4	150.0
54"	72"		96.4	120.0
60"	80"		86.8	120.0
66"	88"		78.9	120.0
72"	96"		72.3	120.0
78"	104"		66.7	120.0
36"	48"	60"	130.1	150.0
42"	56"		111.5	150.0
48"	64"		97.6	120.0
54"	72"		86.8	120.0
60"	80"		78.1	120.0
66"	88"		71.0	120.0
36"	48"	66"	118.3	150.0
42"	56"		101.4	120.0
48"	64"		88.7	120.0
54"	72"		78.9	120.0
60"	80"		71.0	120.0
36"	48"	72"	108.4	150.0
42"	56"		93.0	120.0
48"	64"		81.3	120.0
54"	72"		72.3	120.0
36"	48"	76"	102.7	120.0
42"	56"		88.1	120.0
48"	64"		77.1	120.0
54"	72"		68.5	120.0

WINDOW DIMS.			ANCHORS TYPE 'A'	ANCHORS TYPE 'B'
WIDTH		HEIGHT	EXT. (+)	EXT. (+)
2 PANEL	3 PANEL		INT. (-)	INT. (-)
26-1/2"	35-5/16"	38-3/8"	150.0	150.0
37"	49-5/16"		150.0	150.0
53-1/8"	71"		137.6	150.0
74"	99"		98.7	120.0
79-1/2"	106"		92.1	120.0
106-1/4"	142"		68.8	120.0
26-1/2"	35-5/16"	50-5/8"	150.0	150.0
37"	49-5/16"		150.0	150.0
53-1/8"	71"		104.3	150.0
74"	99"		74.8	120.0
79-1/2"	106"		69.8	120.0
26-1/2"	35-5/16"	63"	150.0	150.0
37"	49-5/16"		120.6	150.0
53-1/8"	71"		83.8	120.0
26-1/2"	35-5/16"	72"	147.3	150.0
37"	49-5/16"		105.5	150.0
53-1/8"	71"		73.3	120.0
26-1/2"	35-5/16"	76"	139.6	150.0
37"	49-5/16"		100.0	120.0
53-1/8"	71"		69.5	120.0

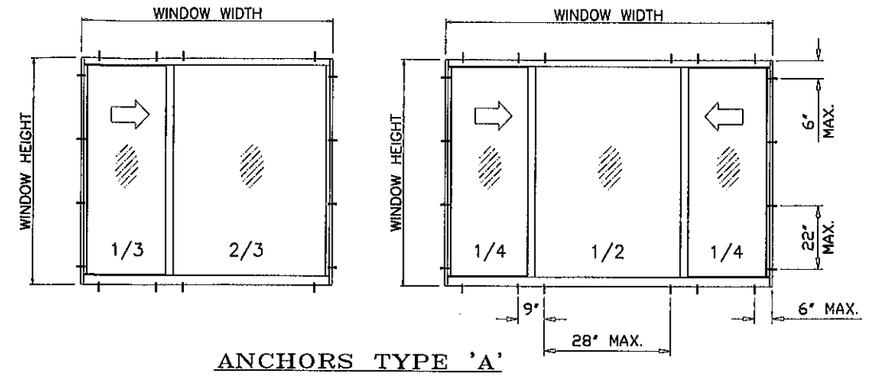

ANCHORS TYPE 'A'

2 ANCHORS AT MTG. STILE ENDS
28" MAX. SPACING BETWEEN ANCHORS

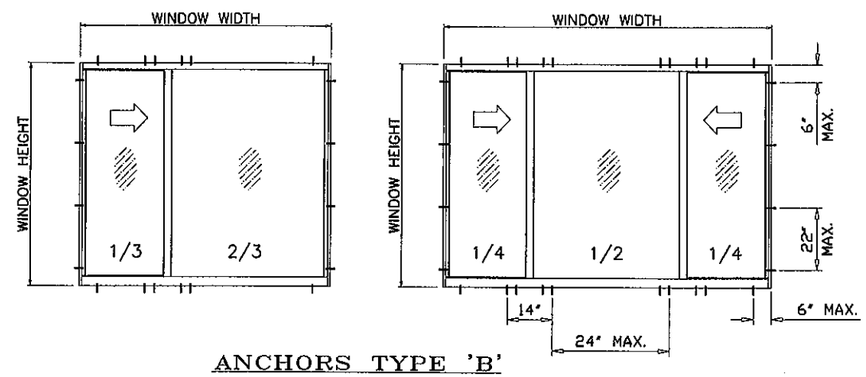

ANCHORS TYPE 'B'

4 ANCHORS AT MTG. STILE ENDS
24" MAX. SPACING BETWEEN ANCHORS

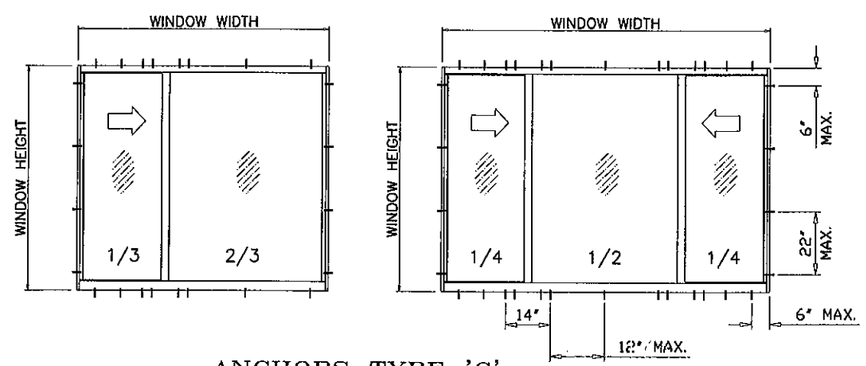

ANCHORS TYPE 'C'

4 ANCHORS AT MTG. STILE ENDS
12" MAX. SPACING BETWEEN ANCHORS

NOTE:
ANCHOR SPACING TO BE AS LISTED ABOVE
1/2" MAX. SHIM SPACE FOR EQUAL LEG FRAMES ONLY

Engr: JAVAD AHMAD
CIVIL
FLA. PE # 70592
C.A.N. 3538
FEB 01 2012

PRODUCT REVISED
as complying with the Florida
Building Code
Acceptance No 12-0214.08
Expiration Date 06/10/2014
By
Miami Dade Product Control

AL-FAROOQ CORPORATION
ENGINEERS & PRODUCT DEVELOPMENT
1235 S.W. 87 AVE
MIAMI, FLORIDA 33174
TEL. (305) 264-8100 FAX. (305) 262-6978
COMP-ANL\W09-13CGI

SERIES-375 ALUM. HORIZ. ROLLING WDW. (L.M.I.)

CGI WINDOWS & DOORS
10100 N.W. 25TH STREET
DORAL, FL. 33172
TEL. (305) 593-6590 FAX. (305) 593-6592

revisions:

no	date	by	description
A	01.06.12		NO CHANGE THIS SHEET

date: 02-27-09
scale: -
dr. by: -
chk. by:

drawing no.
W09-13

WINDOW DIMS.			ANCHORS TYPE 'A'	ANCHORS TYPE 'B'
WIDTH		HEIGHT	EXT. (+)	EXT. (+)
2 PANEL	3 PANEL		INT. (−)	INT. (−)
36"	48"	36"	150.0	150.0
42"	56"		150.0	150.0
48"	64"		150.0	150.0
54"	72"		143.4	150.0
60"	80"		129.1	150.0
66"	88"		117.3	150.0
72"	96"		107.6	150.0
78"	104"		99.3	120.0
84"	112"		92.2	120.0
96"	128"		80.7	120.0
108"	144"		71.7	120.0
36"	48"	48"	150.0	150.0
42"	56"		138.3	150.0
48"	64"		121.0	150.0
54"	72"		107.6	150.0
60"	80"		96.8	120.0
66"	88"		88.0	120.0
72"	96"		80.7	120.0
78"	104"		74.5	120.0
84"	112"		69.1	120.0
36"	48"	54"	143.4	150.0
42"	56"		122.9	150.0
48"	64"		107.6	150.0
54"	72"		95.6	120.0
60"	80"		86.0	120.0
66"	88"		78.2	120.0
72"	96"		71.7	120.0
78"	104"		66.2	120.0
36"	48"	60"	129.1	150.0
42"	56"		110.6	150.0
48"	64"		96.8	120.0
54"	72"		86.0	120.0
60"	80"		77.4	120.0
66"	88"		70.4	120.0
36"	48"	66"	117.3	150.0
42"	56"		100.6	120.0
48"	64"		88.0	120.0
54"	72"		78.2	120.0
60"	80"		70.4	120.0
36"	48"	72"	107.6	150.0
42"	56"		92.2	120.0
48"	64"		80.7	120.0
54"	72"		71.7	120.0
36"	48"	76"	101.9	120.0
42"	56"		87.3	120.0
48"	64"		76.4	120.0
54"	72"		67.9	120.0

WINDOW DIMS.			ANCHORS TYPE 'A'	ANCHORS TYPE 'B'
WIDTH		HEIGHT	EXT. (+)	EXT. (+)
2 PANEL	3 PANEL		INT. (−)	INT. (−)
26-1/2"	35-5/16"	38-3/8"	150.0	150.0
37"	49-5/16"		150.0	150.0
53-1/8"	71"		136.4	150.0
74"	99"		97.8	120.0
79-1/2"	106"		91.4	120.0
106-1/4"	142"		68.2	120.0
26-1/2"	35-5/16"	50-5/8"	150.0	150.0
37"	49-5/16"		148.8	150.0
53-1/8"	71"		103.4	150.0
74"	99"		74.2	120.0
79-1/2"	106"		69.3	120.0
26-1/2"	35-5/16"	63"	150.0	150.0
37"	49-5/16"		119.6	150.0
53-1/8"	71"		83.1	120.0
26-1/2"	35-5/16"	72"	146.1	150.0
37"	49-5/16"		104.6	150.0
53-1/8"	71"		72.7	120.0
26-1/2"	35-5/16"	76"	138.4	150.0
37"	49-5/16"		99.1	120.0
53-1/8"	71"		68.9	120.0

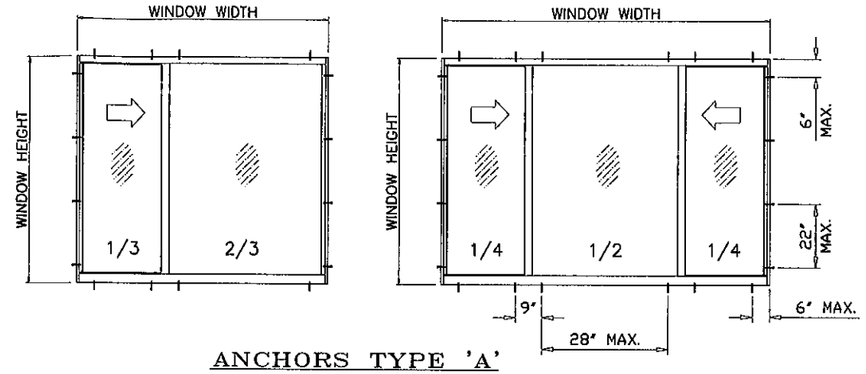

ANCHORS TYPE 'A'

2 ANCHORS AT MTG. STILE ENDS
28" MAX. SPACING BETWEEN ANCHORS

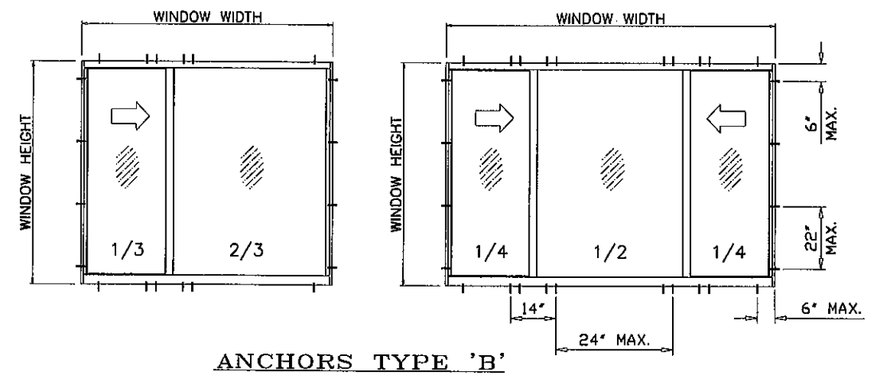

ANCHORS TYPE 'B'

4 ANCHORS AT MTG. STILE ENDS
24" MAX. SPACING BETWEEN ANCHORS

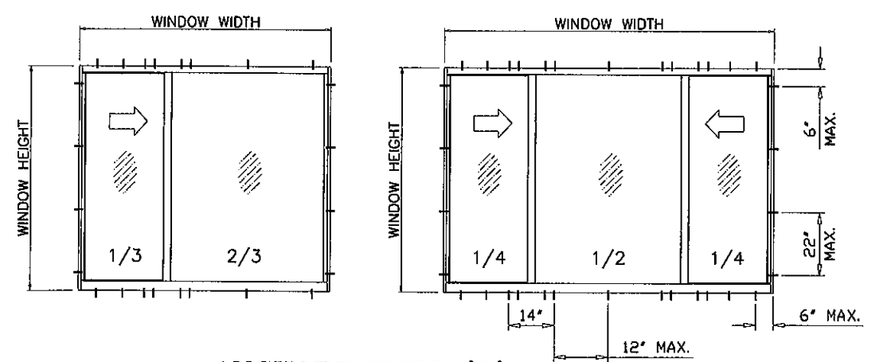

ANCHORS TYPE 'C'

4 ANCHORS AT MTG. STILE ENDS
12" MAX. SPACING BETWEEN ANCHORS

NOTE:
ANCHOR SPACING TO BE AS LISTED ABOVE
3/8" MAX. SHIM SPACE FOR FLANGE AND EQUAL LEG FRAMES

Engr: JAVAD AHMAD
CIVIL
FLA. PE # 70592
C.A.N. 3538

FEB 01 2012

PRODUCT REVISED
as complying with the Florida
Building Code
Acceptance No 12-0214.08
Expiration Date 06/10/2014
By
Miami Dade Product Control

AL-FAROOQ CORPORATION
ENGINEERS & PRODUCT DEVELOPMENT
1235 S.W. 87 AVE
MIAMI, FLORIDA 33174
TEL. (305) 264-8100 FAX. (305) 262-6978

COMP-ANL\W09-13CGI

SERIES-375 ALUM. HORIZ. ROLLING WDW. (L.M.I.)

CGI WINDOWS & DOORS
10100 N.W. 25TH STREET
DORAL, FL. 33172
TEL. (305) 593-6590 FAX. (305) 593-6592

revisions:

no	date	by	description
A	01.06.12		CHART REV.

date: 02-27-09
scale: -
dr. by: -
chk. by:

drawing no.
W09-13

INSTALLATION CONDITIONS FLANGE FRAME

FLANGE FRAME INSTALLATION TYPE '1' THRU 1 BY WOOD BUCK

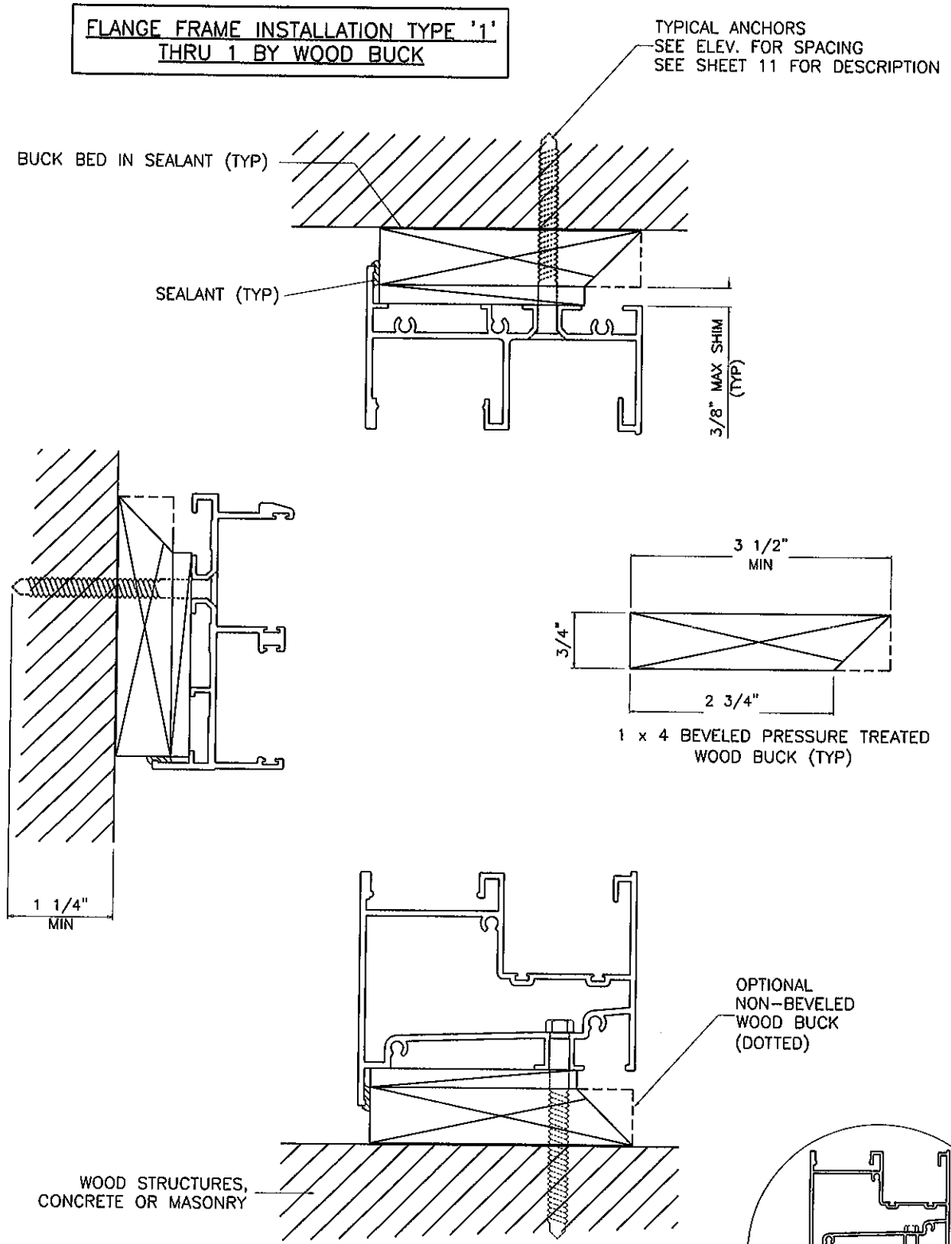

FLANGE FRAME INSTALLATION TYPE '2' THRU 2 BY WOOD BUCK

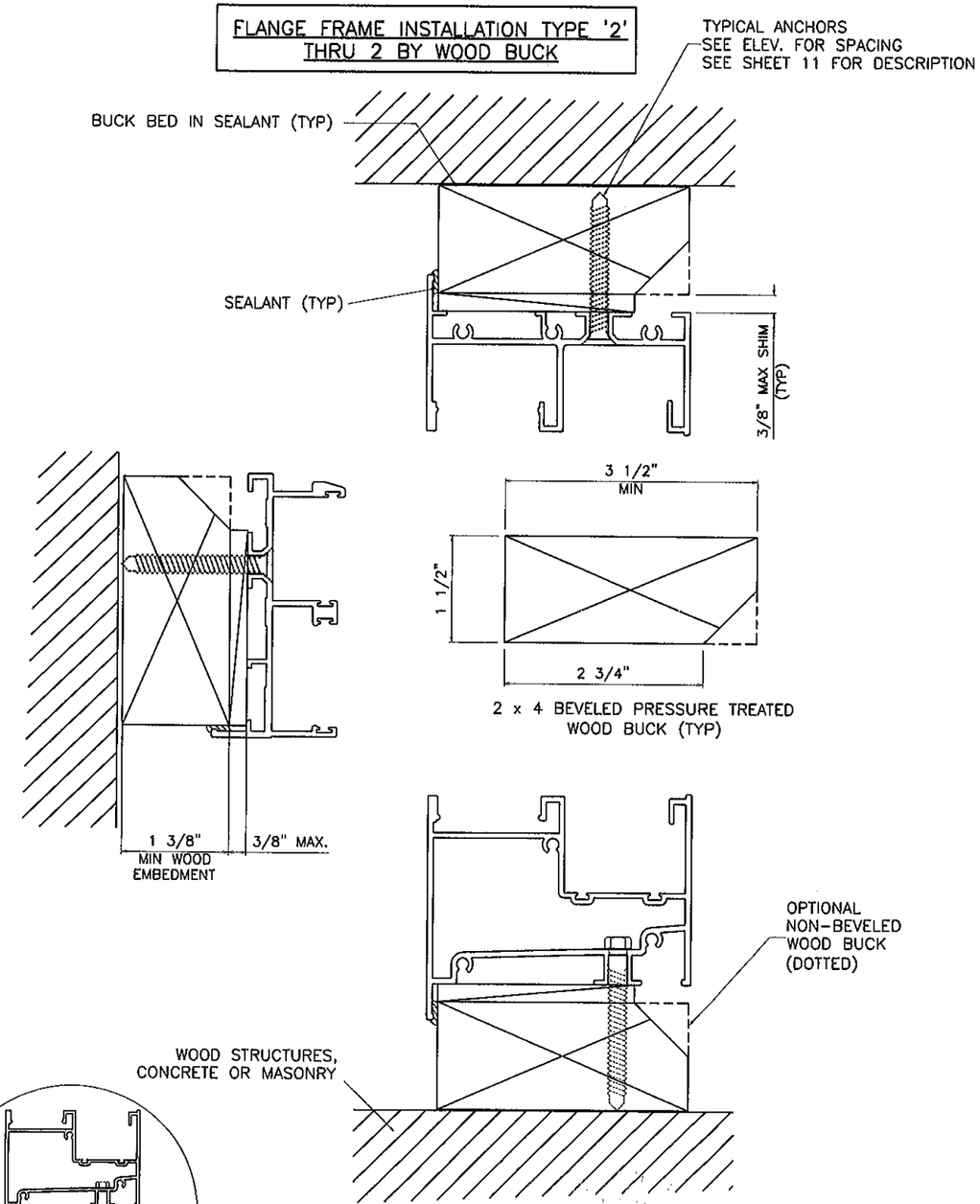

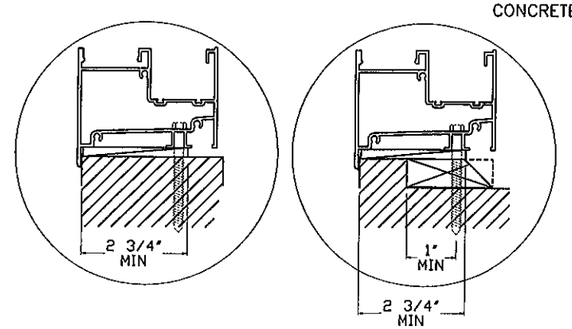

Optional Pre-Cast Sill

WOOD BUCKS NOT BY CGI CORP., MUST SUSTAIN LOADS IMPOSED BY GLAZING SYSTEM AND TRANSFER THEM TO THE BUILDING STRUCTURE.

Engr: JAVAD AHMAD
CIVIL
FLA. PE # 70592
C.A.N. 3538
FEB 01 2012

PRODUCT REVISED
as complying with the Florida Building Code
Acceptance No 12-0214.08
Expiration Date 06/10/2014
By
Miami Dade Product Control

AL-FAROOQ CORPORATION
ENGINEERS & PRODUCT DEVELOPMENT
1235 S.W. 87 AVE
MIAMI, FLORIDA 33174
TEL. (305) 264-8100 FAX. (305) 262-6978
COMP-ANL\W09-13CGI

SERIES-375 ALUM. HORIZ. ROLLING WDW. (L.M.I.)

CGI WINDOWS & DOORS
10100 N.W. 25TH STREET
DORAL, FL. 33172
TEL. (305) 593-6590 FAX. (305) 593-6592

revisions:

no	date	by	description
A	01.06.12		NO CHANGE THIS SHEET

date: 02-27-09
scale: -
dr. by: -
chk. by:

drawing no.
W09-13

INSTALLATION CONDITIONS EQUAL LEG FRAME

EQUAL LEG INSTALLATION TYPE '1' THRU 1 OR 2 BY WOOD BUCK

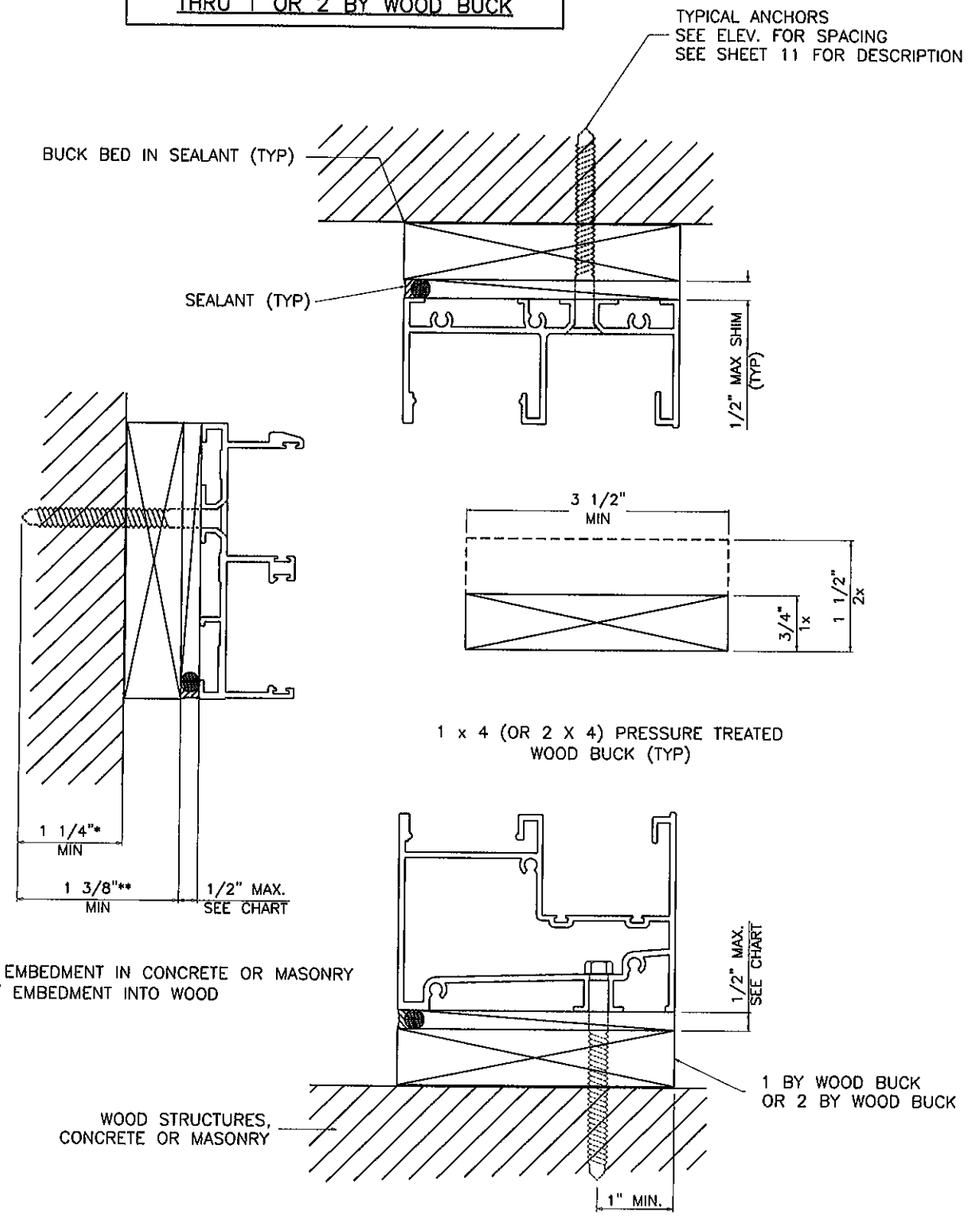

*1 1/4" EMBEDMENT IN CONCRETE OR MASONRY
**1 3/8" EMBEDMENT INTO WOOD

EQUAL LEG INSTALLATION TYPE '2' DIRECTLY INTO STRUCTURE OPENING

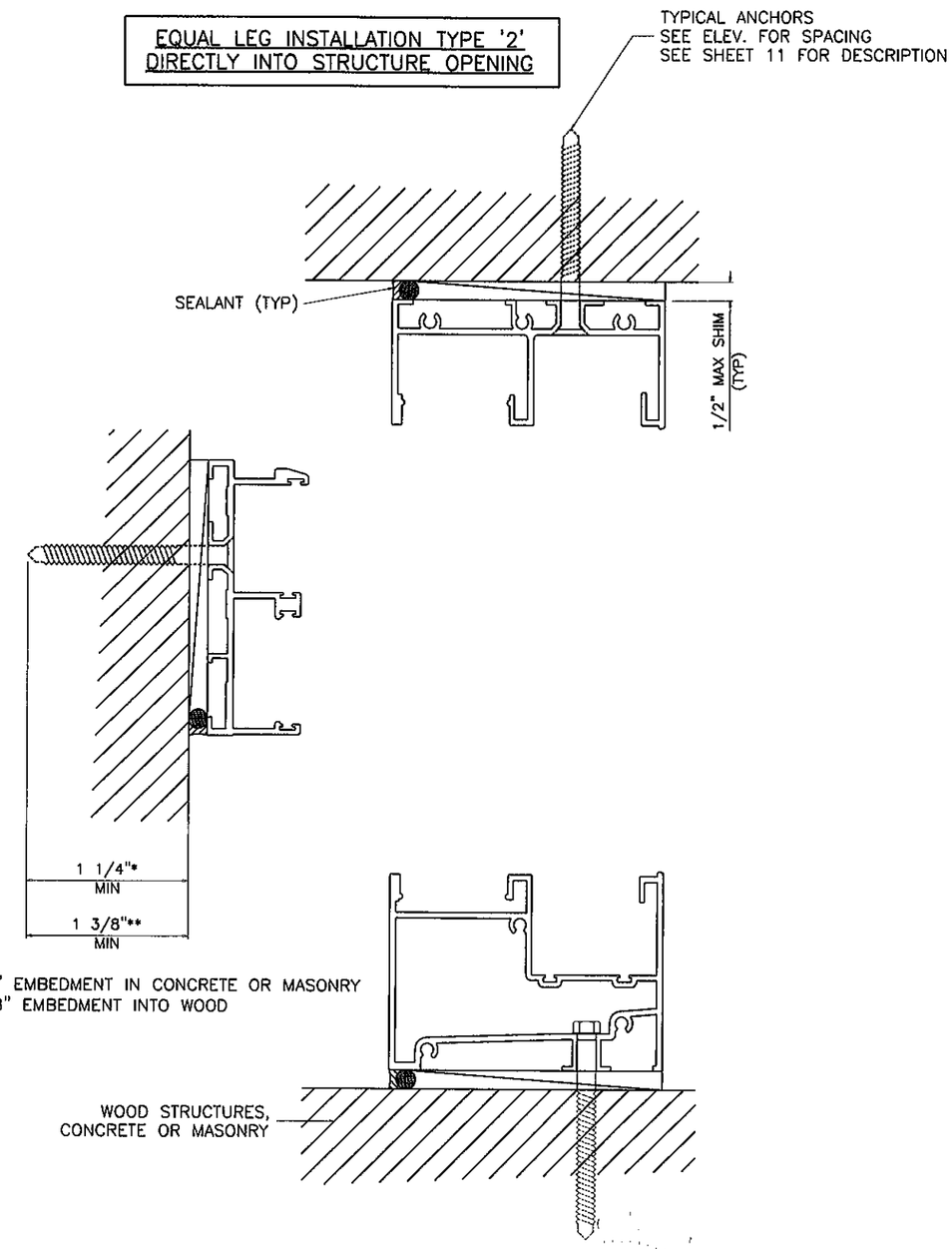

*1 1/4" EMBEDMENT IN CONCRETE OR MASONRY
**1 3/8" EMBEDMENT INTO WOOD

WOOD BUCKS NOT BY CGI CORP., MUST SUSTAIN LOADS IMPOSED BY GLAZING SYSTEM AND TRANSFER THEM TO THE BUILDING STRUCTURE.

Engr: JAVAD AHMAD
CIVIL
FLA. PE # 70592
C.A.N. 3538

FEB 01 2012

PRODUCT REVISED
as complying with the Florida Building Code
Acceptance No 12-0214.08
Expiration Date 06/10/2014
By
Miami Dade Product Control

AL-FAROOQ CORPORATION
ENGINEERS & PRODUCT DEVELOPMENT
1235 S.W. 87 AVE
MIAMI, FLORIDA 33174
TEL. (305) 264-8100 FAX. (305) 262-6978

COMP-ANL\W09-13CGI

SERIES-375 ALUM. HORIZ. ROLLING WDW. (L.M.I.)

CGI WINDOWS & DOORS
10100 N.W. 25TH STREET
DORAL, FL. 33172
TEL. (305) 593-6590 FAX. (305) 593-6592

revisions:

no	date	by	description
A	01.06.12		NO CHANGE THIS SHEET

date: 02-27-09
scale: -
dr. by: -
chk. by:

drawing no.
W09-13

INSTALLATION CONDITIONS METAL STRUCTURES

FLANGE FRAME INSTALLATION

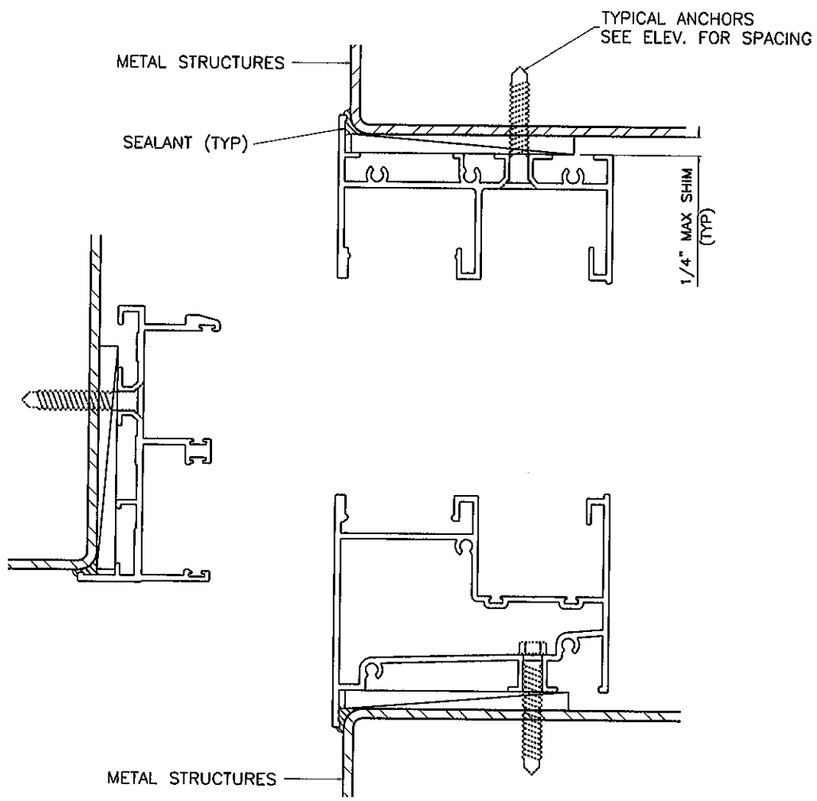

EQUAL LEG FRAME INSTALLATION

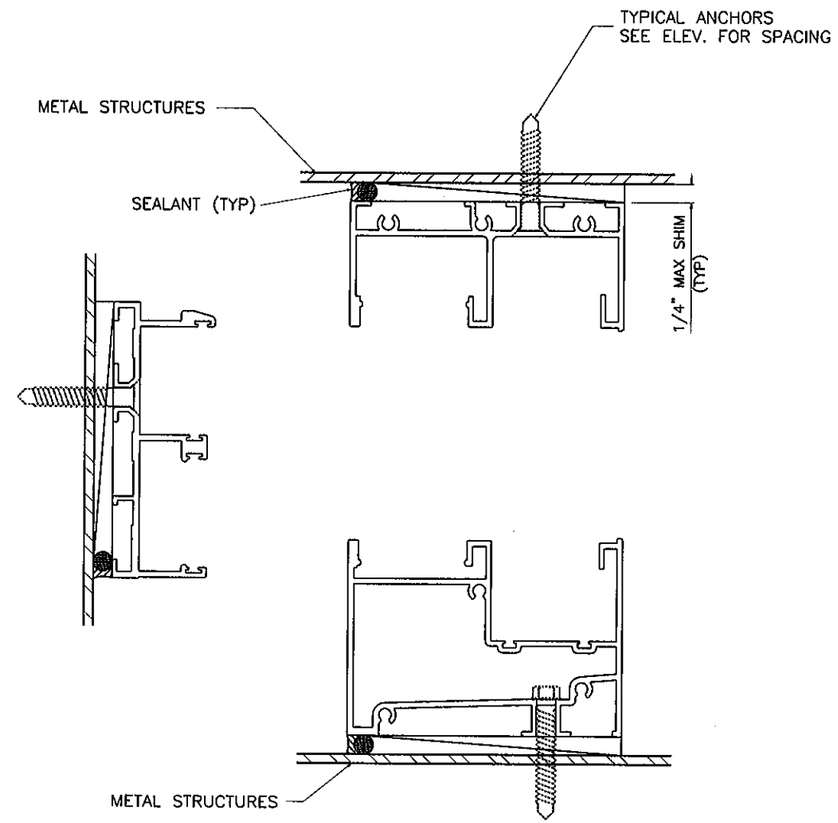

TYPICAL ANCHORS: SEE ELEV. FOR SPACING

1/4" DIA. ULTRACON BY 'ELCO' (Fu=177 KSI, Fy=155 KSI)
1/4" DIA. HILTI KWIK-CON II (Fu=163 KSI, Fy=157 KSI)

INTO 2BY WOOD BUCKS OR WOOD STRUCTURES
1-3/8" MIN. PENETRATION INTO WOOD

THRU 1BY BUCKS INTO CONC. OR MASONRY
1-1/4" MIN. EMBED INTO CONC. OR MASONRY

1/4" DIA. ULTRACON BY 'ELCO' (Fu=177 KSI, Fy=155 KSI)
1/4" DIA. HILTI KWIK-CON II (Fu=163 KSI, Fy=157 KSI)

DIRECTLY INTO CONC. OR MASONRY
1-3/8" MIN. EMBED INTO CONC. OR MASONRY

#14 SMS OR SELF DRILLING SCREWS (GRADE 2 CRS)

INTO MIAMI-DADE COUNTY APPROVED MULLIONS (MIN. THK. = .090")

INTO METAL STRUCTURES
STEEL : 12 GA. MIN. (Fy = 36 KSI MIN.)
ALUMINUM : 1/8" THK. MIN. (6063-T5 MIN.)
(STEEL IN CONTACT WITH ALUMINUM TO BE PLATED OR PAINTED)

TYPICAL EDGE DISTANCE

INTO CONCRETE AND MASONRY = 2-1/2" MIN.
INTO WOOD STRUCTURE = 1" MIN.
INTO METAL STRUCTURE = 3/4" MIN.

CONCRETE f'c = 3000 PSI MIN.
MASONRY f'm = 1500 PSI MIN.

Engr: JAVAD AHMAD
CIVIL
FLA. PE # 70592
C.A.N. 3538
FEB 01 2012

PRODUCT REVISED
as complying with the Florida
Building Code
Acceptance No 12-0214.08
Expiration Date 06/05/2014
By
Miami Dade Product Control

AL-FAROOQ CORPORATION
ENGINEERS & PRODUCT DEVELOPMENT
1235 S.W. 87 AVE
MIAMI, FLORIDA 33174
TEL. (305) 264-8100 FAX. (305) 262-6978
COMP-ANL\W09-13CGI

SERIES-375 ALUM. HORIZ. ROLLING WDW. (L.M.I.)

CGI WINDOWS & DOORS
10100 N.W. 25TH STREET
DORAL, FL. 33172
TEL. (305) 593-6590 FAX. (305) 593-6592

revisions:

no	date	by	description
A	01.06.12		NO CHANGE THIS SHEET

date: 02-27-09
scale: -
dr. by: -
chk. by:

drawing no.
W09-13

MULLION PERFORMANCE

MULLION AT FLANGE WINDOWS

1" x 4" x 1/8" thk. Aluminum Tube Mullion (unclipped at ends) (Mull length = Wdw Height – 1")

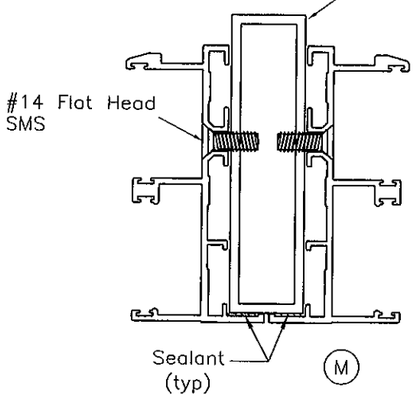

MULLION AT EQUAL LEG WINDOWS

1" x 4" x 1/8" thk. Aluminum Tube Mullion (unclipped at ends) (Mull length = Wdw Height)

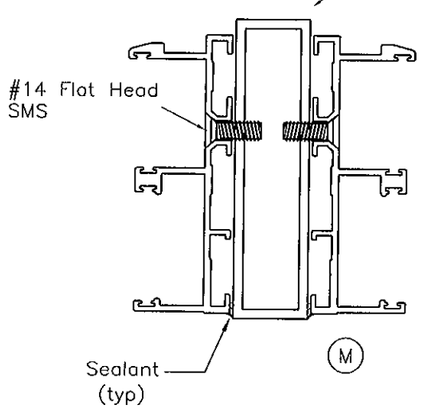

STANDARD INSTALLATION

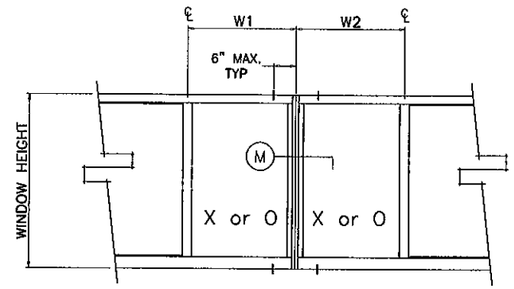

MULTIPLE OPENING
(2 OR MORE WINDOWS)
w/ 1 SCREW ON EACH SIDE OF MULLION

HIGH LOAD INSTALLATION

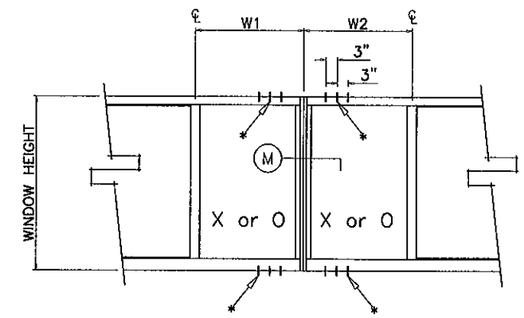

MULTIPLE OPENING
(2 OR MORE WINDOWS)
w/ 2 OR 3 SCREWS ON EACH SIDE OF MULLION
(* = ADDITIONAL HOLES TO BE DRILLED BY INSTALLER)

$$\text{TRIBUTARY WIDTH} = \frac{W1 + W2}{2}$$

MULLION DESIGN LOAD CAPACITY – PSF

TRIBUTARY WIDTH	WINDOW HEIGHT	EXT.(+) INT.(–)
24"	54"	150.0
28"		150.0
30"		150.0
32"		150.0
36"		120.0
39"		120.0
40"		120.0
42"		120.0
44"		120.0
46"		120.0
48"		120.0
52"		120.0
24"	60"	150.0
28"		150.0
30"		150.0
32"		120.0
36"		120.0
39"		120.0
40"		120.0
42"		120.0
44"		120.0
46"		120.0
24"	66"	150.0
28"		120.0
30"		120.0
32"		120.0
36"		120.0
39"		120.0
40"		120.0
42"		120.0

MULLION DESIGN LOAD CAPACITY – PSF

TRIBUTARY WIDTH	WINDOW HEIGHT	EXT.(+) INT.(–)
24"	72"	150.0
28"		120.0
30"		120.0
32"		120.0
36"		120.0
39"		120.0
24"	76"	120.0
28"		120.0
30"		120.0
32"		120.0
36"		120.0
37"		120.0

MULLION DESIGN LOAD CAPACITY – PSF

TRIBUTARY WIDTH	WINDOW HEIGHT	EXT.(+) INT.(–)
18"	38-3/8"	150.0
26-1/2"		150.0
37"		150.0
44"		150.0
56"		120.0
71"		120.0
18"	50-5/8"	150.0
26-1/2"		150.0
37"		120.0
44"		120.0
55"		120.0
18"	63"	150.0
26-1/2"		150.0
37"		120.0
44"		120.0
18"	72"	150.0
26-1/2"		120.0
37"		120.0
39"		120.0
18"	76"	150.0
26-1/2"		120.0
37"		120.0

NOTE: VALUES FROM CHARTS MAY BE INTERPOLATED BETWEEN SIZES

Engr: JAVAD AHMAD
CIVIL
FLA. PE # 70592
C.A.N. 3538

FEB 01 2012

PRODUCT REVISED
as complying with the Florida Building Code
Acceptance No 12-0214.08
Expiration Date 06/10/2014
By
Miami Dade Product Control

AL-FAROOQ CORPORATION
ENGINEERS & PRODUCT DEVELOPMENT
1235 S.W. 87 AVE
MIAMI, FLORIDA 33174
TEL. (305) 264-8100 FAX. (305) 262-6978

COMP-ANL\W09-13CGI

SERIES-375 ALUM. HORIZ. ROLLING WDW. (L.M.I.)

CGI WINDOWS & DOORS
10100 N.W. 25TH STREET
MIAMI, FL. 33172
TEL. (305) 593-6590 FAX. (305) 593-6592

revisions:

no	date	by	description
A	01.06.12		NO CHANGE THIS SHEET

date: 02-27-09
scale: –
dr. by: –
chk. by:

drawing no.
W09-13

PERFORMANCE VALUES OF UNCLIPPED MULLION ANCHORS EXT.(+) & INT.(−)				
TRIBUTARY WIDTH	WINDOW HEIGHT	CLUSTER OF 2	CLUSTER OF 4	CLUSTER OF 6
24"	54"	107.6	150.0	150.0
28"		92.2	150.0	150.0
30"		86.0	150.0	150.0
32"		80.7	150.0	150.0
36"		71.7	120.0	120.0
40"		64.5	120.0	120.0
44"		58.7	117.3	120.0
48"		53.8	107.6	120.0
52"		49.6	99.3	120.0
24"	60"	96.8	150.0	150.0
28"		83.0	150.0	150.0
30"		77.4	150.0	150.0
32"		72.6	120.0	120.0
36"		64.5	120.0	120.0
40"		58.1	116.2	120.0
44"		52.8	105.6	120.0
24"	66"	88.0	150.0	150.0
28"		75.4	120.0	120.0
30"		70.4	120.0	120.0
32"		66.0	120.0	120.0
36"		58.7	117.3	120.0
40"		52.8	105.6	120.0
24"	72"	80.7	150.0	150.0
28"		69.1	120.0	120.0
30"		64.5	120.0	120.0
32"		60.5	120.0	120.0
36"		53.8	107.6	120.0
24"	76"	76.4	120.0	120.0
28"		65.5	120.0	120.0
30"		61.1	120.0	120.0
32"		57.3	114.6	120.0
36"		50.9	101.9	120.0

PERFORMANCE VALUES OF UNCLIPPED MULLION ANCHORS EXT.(+) & INT.(−)				
TRIBUTARY WIDTH	WINDOW HEIGHT	CLUSTER OF 2	CLUSTER OF 4	CLUSTER OF 6
18"	38-3/8"	150.0	150.0	150.0
26-1/2'		137.1	150.0	150.0
37"		98.2	150.0	150.0
44"		82.6	150.0	150.0
56"		64.9	120.0	120.0
71"		51.2	102.3	120.0
18"	50-5/8"	150.0	150.0	150.0
26-1/2'		103.9	150.0	150.0
37"		74.4	120.0	120.0
44"		62.6	120.0	120.0
18"	63"	122.9	150.0	150.0
26-1/2'		83.5	150.0	150.0
37"		59.8	119.6	120.0
44"		50.3	100.6	120.0
18"	72"	107.6	150.0	150.0
26-1/2'		73.1	120.0	120.0
37"		52.3	104.6	120.0
18"	76"	101.9	150.0	150.0
26-1/2'		69.2	120.0	120.0
37"		49.6	99.1	120.0

NOTE: VALUES FROM CHARTS MAY BE INTERPOLATED BETWEEN SIZES

MULLION ANCHORS
ADJACENT TO MULLIONS AT HEAD & SILL
ALL OTHER WINDOW ANCHORS
AS PER SHEETS 9 THRU 11

TRIBUTARY WIDTH = $\frac{W1 + W2}{2}$

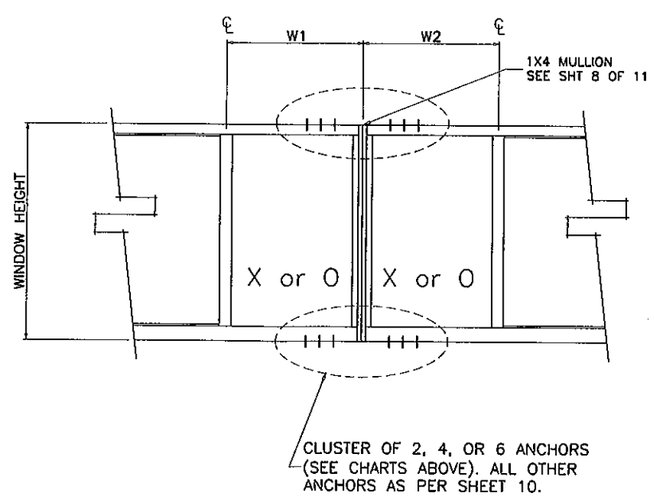

Engr: JAVAD AHMAD
CIVIL
FLA. PE # 70592
C.A.N. 3538
FEB 01 2012

PRODUCT REVISED
as complying with the Florida
Building Code 12-0214.08
Acceptance No
Expiration Date 06/10/2014
By
Miami

AL-FAROOQ CORPORATION
ENGINEERS & PRODUCT DEVELOPMENT
1235 S.W. 87 AVE
MIAMI, FLORIDA 33174
TEL (305) 264-8100 FAX (305) 262-6978

COMP-ANL\W09-13CGI

SERIES-375 ALUM. HORIZ. ROLLING WDW. (L.M.I.)

CGI WINDOWS & DOORS
10100 N.W. 25TH STREET
MIAMI, FL. 33172
TEL. (305) 593-6590 FAX. (305) 593-6592

revisions:

no	date	by	description
A	01.06.12		CHART REV.

date: 02-27-09
scale: -
dr. by: -
chk. by:

drawing no.
W09-13

PERFORMANCE VALUES OF ALUMINUM BUCK INSTALLATION ANCHORS

EXT.(+) & INT.(−)

WINDOW DIMS.		ANCHORS AT 16" O.C.		ANCHORS AT 8" O.C.	
WIDTH	HEIGHT	WOOD/BLOCK	CONC.	WOOD/BLOCK	CONC.
36"	36"	150.0	150.0	150.0	150.0
48"		150.0	150.0	150.0	150.0
56"		124.6	150.0	150.0	150.0
60"		112.8	150.0	150.0	150.0
64"		128.7	150.0	150.0	150.0
72"		109.6	150.0	150.0	150.0
80"		114.6	150.0	150.0	150.0
84"		107.6	150.0	150.0	150.0
88"		101.5	144.0	150.0	150.0
96"		106.3	150.0	150.0	150.0
108"		92.1	130.7	150.0	150.0
112"		100.8	143.0	150.0	150.0
117"		95.7	135.8	150.0	150.0
126"		98.7	140.0	150.0	150.0
144"		94.0	133.3	150.0	150.0
36"	48"	150.0	150.0	150.0	150.0
48"		148.0	150.0	150.0	150.0
56"		111.0	150.0	150.0	150.0
60"		98.7	140.0	150.0	150.0
64"		111.0	150.0	150.0	150.0
72"		92.5	131.3	150.0	150.0
80"		95.1	135.0	150.0	150.0
84"		88.8	126.0	148.0	150.0
88"		83.3	118.1	150.0	150.0
96"		86.3	122.5	148.0	150.0
108"		74.0	105.0	137.4	150.0
112"		80.7	114.5	141.3	150.0
117"		76.4	108.4	143.2	150.0
126"		78.4	111.2	139.3	150.0
144"		74.0	105.0	133.2	150.0
36"	54"	131.6	150.0	150.0	150.0
48"		118.4	150.0	150.0	150.0
56"		108.9	150.0	150.0	150.0
60"		95.7	135.8	150.0	150.0
64"		106.7	150.0	150.0	150.0
72"		87.7	124.4	150.0	150.0
80"		89.4	126.8	148.9	150.0
84"		83.1	117.9	138.5	150.0
88"		77.6	110.2	142.3	150.0
96"		80.1	113.6	137.3	150.0
108"		68.2	96.8	126.7	150.0
112"		74.3	105.4	130.0	150.0
117"		70.2	99.6	131.6	150.0
126"		71.8	101.8	127.6	150.0
144"		67.5	95.7	121.4	150.0
36"	60"	112.8	150.0	150.0	150.0
48"		98.7	140.0	150.0	150.0
56"		95.1	135.0	150.0	150.0
60"		94.7	134.4	150.0	150.0
64"		94.7	134.4	150.0	150.0
72"		84.6	120.0	150.0	150.0
80"		85.2	121.0	142.1	150.0
84"		78.9	112.0	131.6	150.0
88"		73.5	104.3	134.7	150.0
96"		75.3	106.9	129.2	150.0
108"		63.8	90.5	118.4	150.0
112"		69.3	98.3	121.3	150.0
117"		65.3	92.7	122.5	150.0
126"		66.6	94.5	118.4	150.0

PERFORMANCE VALUES OF ALUMINUM BUCK INSTALLATION ANCHORS

EXT.(+) & INT.(−)

WINDOW DIMS.		ANCHORS AT 16" O.C.		ANCHORS AT 8" O.C.	
WIDTH	HEIGHT	WOOD/BLOCK	CONC.	WOOD/BLOCK	CONC.
36"	66"	123.3	150.0	150.0	150.0
48"		105.7	150.0	150.0	150.0
56"		100.2	142.1	150.0	150.0
60"		94.7	134.4	150.0	150.0
64"		97.9	139.0	150.0	150.0
72"		82.8	117.5	149.0	150.0
80"		82.4	117.0	137.4	150.0
84"		76.0	107.8	126.6	150.0
88"		70.5	100.0	129.2	150.0
96"		71.8	101.8	123.0	150.0
108"		60.3	85.5	111.9	150.0
112"		65.4	92.8	114.4	150.0
117"		61.5	87.3	115.3	150.0
126"		62.5	88.7	111.1	150.0
36"	72"	109.6	150.0	150.0	150.0
48"		92.5	131.3	150.0	150.0
56"		86.5	122.7	150.0	150.0
60"		84.6	120.0	150.0	150.0
64"		83.2	118.1	149.8	150.0
72"		82.2	116.7	148.0	150.0
80"		80.7	114.5	134.5	150.0
84"		74.0	105.0	123.3	150.0
88"		68.3	96.9	125.2	150.0
96"		69.1	98.0	118.4	150.0
108"		57.6	81.7	106.9	150.0
112"		62.3	88.4	109.1	150.0
117"		58.5	83.0	109.6	150.0
36"	76"	102.1	144.8	150.0	150.0
48"		85.4	121.2	150.0	150.0
56"		79.3	112.5	142.7	150.0
60"		77.2	109.6	139.0	150.0
64"		75.7	107.4	136.2	150.0
72"		74.0	105.0	133.2	150.0
80"		73.8	104.7	132.8	150.0
84"		73.2	103.8	121.9	150.0
88"		67.3	95.5	123.4	150.0
96"		67.7	96.0	116.0	150.0
108"		56.1	79.6	104.2	147.8

NOTE: VALUES FROM CHARTS MAY BE INTERPOLATED BETWEEN SIZES

ALUMINUM BUCK FRAMING DETAILS

REFER TO SHEETS 5 & 7 FOR WINDOW CAPACITIES
USE LOWER APPLICABLE VALUES.

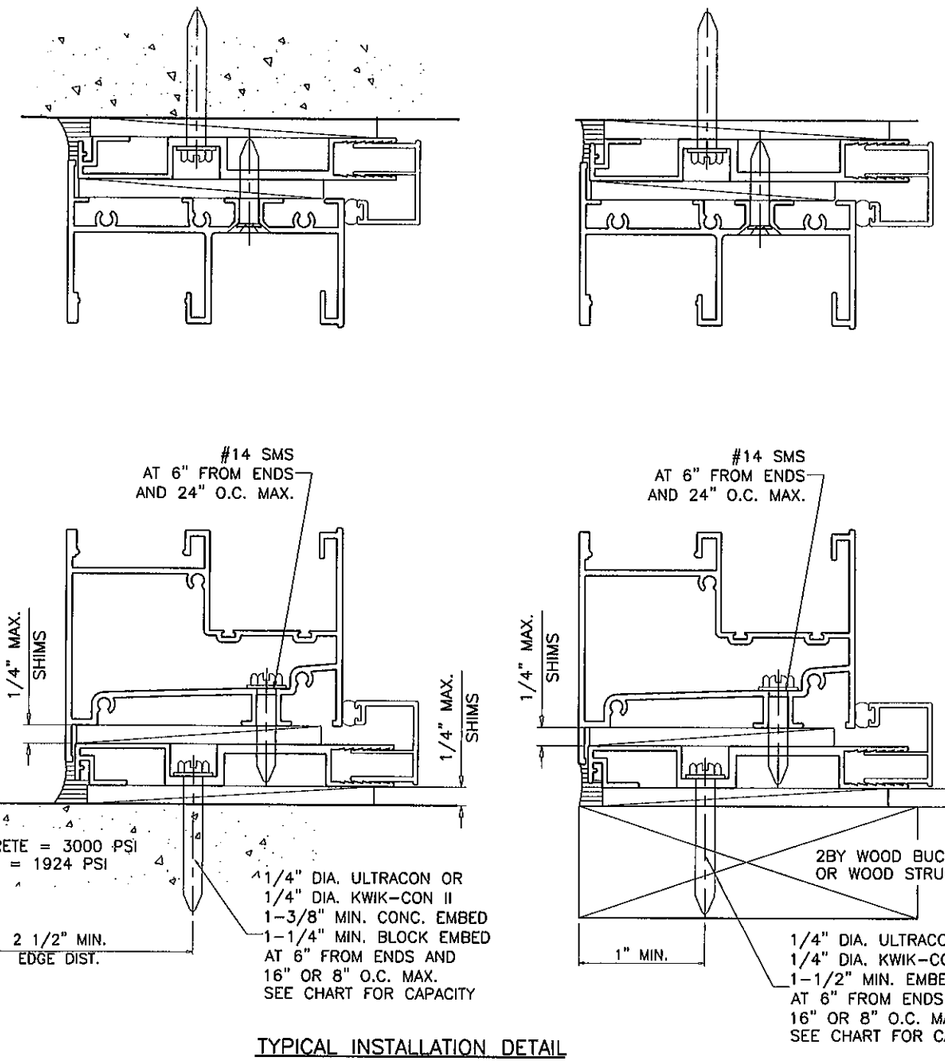

TYPICAL INSTALLATION DETAIL
ON ALL FOUR SIDES/USING ALUMINUM BUCK SYSTEM

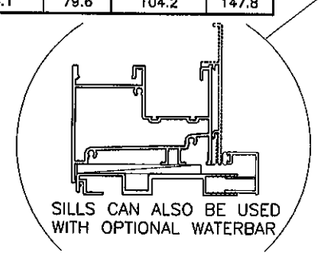

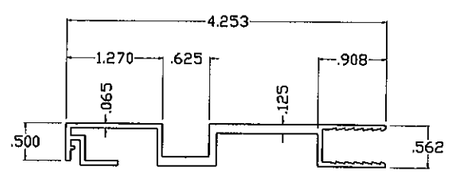

ALUMINUM BUCK
6063-T6

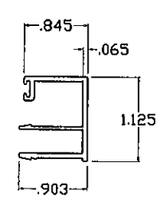

OPTIONAL COVER
6063-T6

Engr: JAVAD AHMAD
CIVIL
FLA. PE # 70592
C.A.N. 3538

FEB 1 1 2012

PRODUCT REVISED
as complying with the Florida
Building Code
Acceptance No 12-0214.08
Expiration/Date 06/10/2014
By
Miami Dade Product Control

AL-FAROOQ CORPORATION
ENGINEERS & PRODUCT DEVELOPMENT
1235 S.W. 87 AVE
MIAMI, FLORIDA 33174
TEL. (305) 264-8100 FAX. (305) 262-6978
COMP-ANL\W09-13CGI

SERIES-375 ALUM. HORIZ. ROLLING WDW. (L.M.I.)

CGI WINDOWS & DOORS
10100 N.W. 25TH STREET
MIAMI, FL. 33172
TEL. (305) 593-6590 FAX. (305) 593-6592

revisions:

no	date	by	description
A	01.06.12		CHART REV.

date: 02-27-09
scale: -
dr. by: -
chk. by:

drawing no.
W09-13

PERFORMANCE VALUES OF ALUMINUM BUCK INSTALLATION ANCHORS EXT.(+) & INT.(-)					
WINDOW DIMS.		ANCHORS AT 16" O.C.		ANCHORS AT 8" O.C.	
WIDTH	HEIGHT	WOOD/BLOCK	CONC.	WOOD/BLOCK	CONC.
26-1/2"	38-3/8"	150.0	150.0	150.0	150.0
53-1/8"		130.9	150.0	150.0	150.0
79-11/16"		110.2	150.0	150.0	150.0
106-1/4"		89.3	126.7	150.0	150.0
111"		96.8	137.3	150.0	150.0
119-1/4"		88.8	126.0	150.0	150.0
159-3/8"		87.2	123.7	150.0	150.0
26-1/2"	50-5/8"	150.0	150.0	150.0	150.0
53-1/8"		121.1	150.0	150.0	150.0
79-11/16"		92.9	131.8	150.0	150.0
106-1/4"		72.8	103.3	135.2	150.0
111"		78.6	111.5	137.6	150.0
119-1/4"		71.7	101.7	134.4	150.0
159-3/8"		69.1	98.0	125.6	150.0
26-1/2"	63"	150.0	150.0	150.0	150.0
53-1/8"		110.1	150.0	150.0	150.0
79-11/16"		84.2	119.5	140.4	150.0
106-1/4"		63.4	89.9	117.7	150.0
111"		68.1	96.6	119.1	150.0
119-1/4"		61.7	87.5	115.7	150.0
26-1/2"	72"	136.9	150.0	150.0	150.0
53-1/8"		88.3	125.3	150.0	150.0
79-11/16"		81.3	115.4	135.5	150.0
106-1/4"		59.0	83.7	109.6	150.0
111"		63.1	89.6	110.5	150.0
26-1/2"	76"	128.2	150.0	150.0	150.0
53-1/8"		81.1	115.1	146.1	150.0
79-11/16"		73.8	104.7	132.8	150.0
106-1/4"		57.5	81.6	106.8	150.0
111"		61.5	87.2	107.6	150.0

NOTE: VALUES FROM CHARTS MAY BE INTERPOLATED BETWEEN SIZES

ALUMINUM BUCK FRAMING DETAILS

REFER TO SHEETS 5 & 7 FOR WINDOW CAPACITIES
USE LOWER APPLICABLE VALUES.

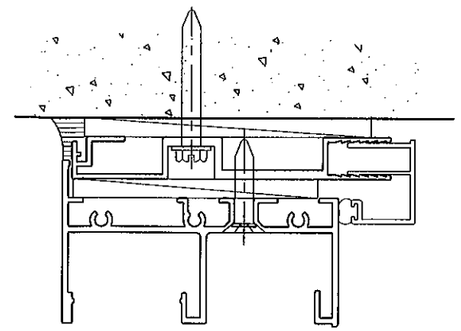

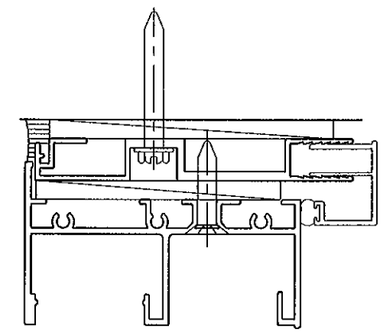

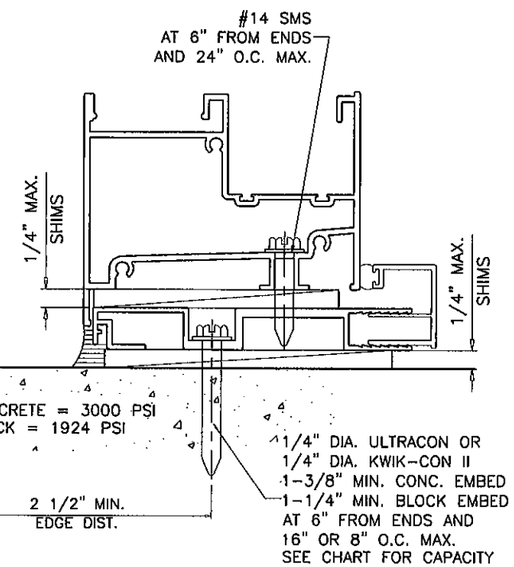

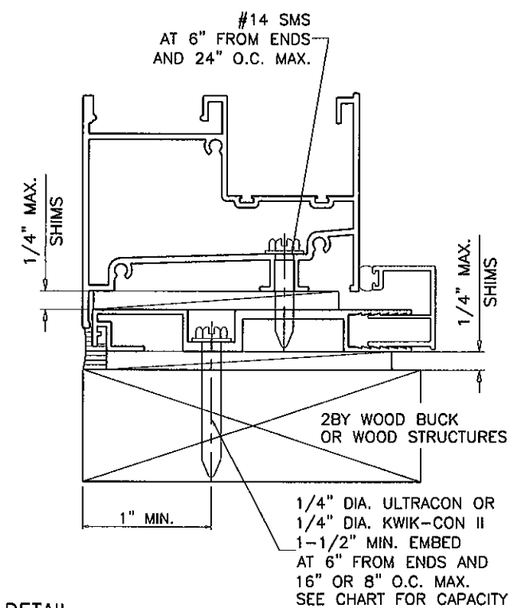

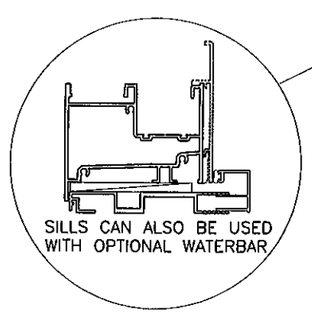

TYPICAL INSTALLATION DETAIL
ON ALL FOUR SIDES/USING ALUMINUM BUCK SYSTEM

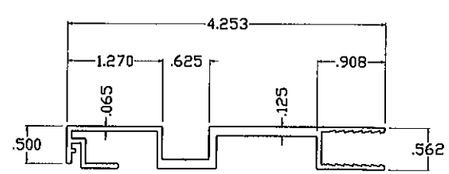

ALUMINUM BUCK
6063-T6

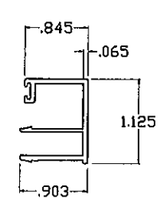

OPTIONAL COVER
6063-T6

Engr: JAVAD AHMAD
CIVIL
FLA. PE # 70592
C.A.N. 3538

FEB 01 2012

PRODUCT REVISED
as complying with the Florida
Building Code
Acceptance No 12-0214.08
Expiration Date 06/10/2014
By
Miami Dade Product Control

AL-FAROOQ CORPORATION
ENGINEERS & PRODUCT DEVELOPMENT
1235 S.W. 87 AVE
MIAMI, FLORIDA 33174
TEL. (305) 264-8100 FAX. (305) 262-6978
COMP-ANL\W09-13CGI

SERIES-375 ALUM. HORIZ. ROLLING WDW. (L.M.I.)

CGI WINDOWS & DOORS
10100 N.W. 25TH STREET
MIAMI, FL. 33172
TEL. (305) 593-6590 FAX. (305) 593-6592

revisions:

no	date	by	description
A	01.06.12		CHART REV.

date: 02-27-09
scale: -
dr. by: -
chk. by:

drawing no.
W09-13

PERFORMANCE VALUES OF ALUMINUM BUCK ANCHORS AT MULLION JOINTS

EXT.(+) & INT.(−)

TRIBUTARY WIDTH	WINDOW HEIGHT	ANCHORS INTO WOOD OR HOLLOW BLOCK			ANCHORS INTO CONCRETE		
		CLUSTER OF 2	CLUSTER OF 4	CLUSTER OF 6	CLUSTER OF 2	CLUSTER OF 4	CLUSTER OF 6
24"	54"	65.8	131.6	150.0	93.3	150.0	150.0
28"		56.4	112.8	150.0	80.0	150.0	150.0
32"		49.3	98.7	148.0	70.0	140.0	150.0
36"		43.9	87.7	131.6	62.2	124.4	150.0
39"		40.5	81.0	121.4	57.4	114.9	150.0
40"		39.5	78.9	118.4	56.0	112.0	150.0
42"		37.6	75.2	112.8	53.3	106.7	150.0
44"		35.9	71.8	107.6	50.9	101.8	150.0
46"		34.3	68.6	103.0	48.7	97.4	146.1
48"		32.9	65.8	98.7	46.7	93.3	140.0
52"		30.4	60.7	91.1	43.1	86.2	129.2
24"	60"	59.2	118.4	150.0	84.0	150.0	150.0
28"		50.7	101.5	150.0	72.0	144.0	150.0
32"		44.4	88.8	133.2	63.0	126.0	150.0
36"		39.5	78.9	118.4	56.0	112.0	150.0
39"		36.4	72.9	109.3	51.7	103.4	150.0
40"		35.5	71.0	106.6	50.4	100.8	150.0
42"		33.8	67.7	101.5	48.0	96.0	144.0
44"		32.3	64.6	96.9	45.8	91.6	137.5
46"		30.9	61.8	92.7	43.8	87.7	131.5
24"	66"	53.8	107.6	150.0	76.4	150.0	150.0
28"		46.1	92.3	138.4	65.5	130.9	150.0
32"		40.4	80.7	121.1	57.3	114.5	150.0
36"		35.9	71.8	107.6	50.9	101.8	150.0
39"		33.1	66.2	99.4	47.0	94.0	141.0
40"		32.3	64.6	96.9	45.8	91.6	137.5
42"		30.8	61.5	92.3	43.6	87.3	130.9
24"	72"	49.3	98.7	148.0	70.0	140.0	150.0
28"		42.3	84.6	126.9	60.0	120.0	150.0
32"		37.0	74.0	111.0	52.5	105.0	150.0
36"		32.9	65.8	98.7	46.7	93.3	140.0
39"		30.4	60.7	91.1	43.1	86.2	129.2
24"	76"	46.7	93.5	140.2	66.3	132.6	150.0
28"		40.1	80.1	120.2	56.8	113.7	150.0
32"		35.1	70.1	105.2	49.7	99.5	149.2
36"		31.2	62.3	93.5	44.2	88.4	132.6

PERFORMANCE VALUES OF ALUMINUM BUCK ANCHORS AT MULLION JOINTS

EXT.(+) & INT.(−)

TRIBUTARY WIDTH	WINDOW HEIGHT	ANCHORS INTO WOOD OR HOLLOW BLOCK			ANCHORS INTO CONCRETE		
		CLUSTER OF 2	CLUSTER OF 4	CLUSTER OF 6	CLUSTER OF 2	CLUSTER OF 4	CLUSTER OF 6
18"	38-3/8"	123.4	150.0	150.0	150.0	150.0	150.0
26-1/2'		83.8	150.0	150.0	118.9	150.0	150.0
37"		60.0	120.1	150.0	85.2	150.0	150.0
44"		50.5	101.0	150.0	71.6	143.3	150.0
56"		39.7	79.3	119.0	56.3	112.6	150.0
71"		31.3	62.6	93.9	44.4	88.8	150.0
18"	50-5/8"	93.6	150.0	150.0	132.7	150.0	150.0
26-1/2'		63.5	127.1	150.0	90.2	150.0	150.0
37"		45.5	91.0	136.5	64.6	129.2	150.0
44"		38.3	76.5	114.8	54.3	108.6	150.0
18"	63"	75.2	150.0	150.0	106.7	150.0	150.0
26-1/2'		51.1	102.1	150.0	72.5	144.9	150.0
37"		36.6	73.1	109.7	51.9	103.8	150.0
44"		30.8	61.5	92.3	43.6	87.3	130.9
18"	72"	65.8	131.6	150.0	93.3	150.0	150.0
26-1/2'		44.7	89.4	134.0	63.4	126.8	150.0
37"		32.0	64.0	96.0	45.4	90.8	136.2
18"	76"	62.3	124.6	150.0	88.4	150.0	150.0
26-1/2'		42.3	84.7	127.0	60.1	120.1	150.0
37"		30.3	60.6	90.9	43.0	86.0	129.0

NOTE: VALUES FROM CHARTS MAY BE INTERPOLATED BETWEEN SIZES

$$\text{TRIBUTARY WIDTH} = \frac{W1 + W2}{2}$$

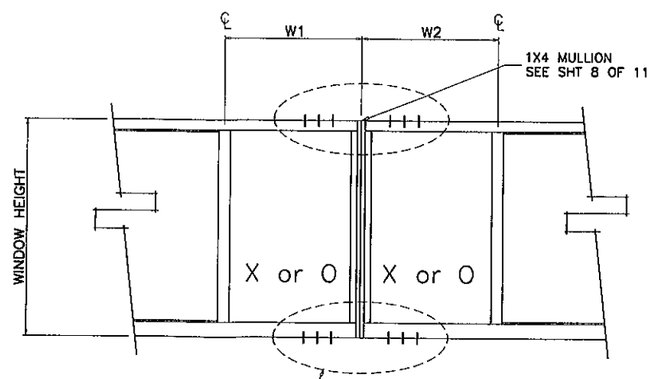

CLUSTER OF 2, 4, OR 6 ANCHORS (SEE CHARTS ABOVE). ALL OTHER BUCK ANCHORS AS PER SHEET 15.

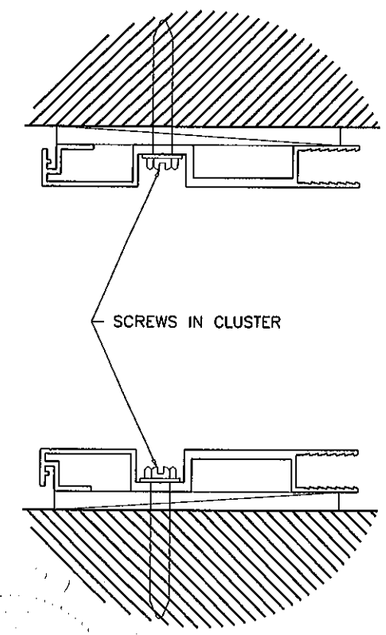

ALUMINUM BUCK ANCHORS
ADJACENT TO MULLIONS AT HEAD & SILL
ALL OTHER ALUMINUM BUCK ANCHORS
AS PER SHEET 14

NOTE: ALUMINUM BUCKS ARE SUPPLIED WITH CLUSTER OF 2 (1 SCREW HOLE PER SIDE) STANDARD. EXTRA HOLES MUST BE FIELD DRILLED IF REQUIRED.

Engr: JAVAD AHMAD
CIVIL
FLA. PE # 70592
C.A.N. 3538
FEB 01 2012

PRODUCT REVISED
as complying with the Florida Building Code
Acceptance No 12-0214.08
Expiration Date 06/10/2014
By
Miami Dade Product Control

AL-FAROOQ CORPORATION
ENGINEERS & PRODUCT DEVELOPMENT
1235 S.W. 87 AVE
MIAMI, FLORIDA 33174
TEL. (305) 264-8100 FAX. (305) 262-6978
COMP-ANL\W09-13CGI

SERIES-375 ALUM. HORIZ. ROLLING WDW. (L.M.I.)

CGI WINDOWS & DOORS
10100 N.W. 25TH STREET
MIAMI, FL. 33172
TEL. (305) 593-6590 FAX. (305) 593-6592

revisions:			
no	date	by	description
A	01.06.12		CHART REV.

date: 02-27-09
scale: –
dr. by: –
chk. by:

drawing no. W09-13