MIAMI-DADE COUNTY
PRODUCT CONTROL SECTION
11805 SW 26 Street, Room 208
Miami, Florida 33175-2474
T (786) 315-2590 F (786) 315-2599
www.miamidade.gov/economy

DEPARTMENT OF REGULATORY AND ECONOMIC RESOURCES (RER)
BOARD AND CODE ADMINISTRATION DIVISION

NOTICE OF ACCEPTANCE (NOA)

Wayne Dalton a Div. of Overhead Door Corporation
3395 Addison Drive
Pensacola, FL 32514

SCOPE: This NOA is being issued under the applicable rules and regulations governing the use of construction materials. The documentation submitted has been reviewed and accepted by Miami-Dade County RER-Product Control Section to be used in Miami Dade County and other areas where allowed by the Authority Having Jurisdiction (AHJ).

This NOA shall not be valid after the expiration date stated below. The Miami-Dade County Product Control Section (In Miami Dade County) and/or the AHJ (in areas other than Miami Dade County) reserve the right to have this product or material tested for quality assurance purposes. If this product or material fails to perform in the accepted manner, the manufacturer will incur the expense of such testing and the AHJ may immediately revoke, modify, or suspend the use of such product or material within their jurisdiction. RER reserves the right to revoke this acceptance, if it is determined by Miami-Dade County Product Control Section that this product or material fails to meet the requirements of the applicable building code.

This product is approved as described herein, and has been designed to comply with the Florida Building Code, including the High Velocity Hurricane Zone.

DESCRIPTION: Models 8024/8124 Code 1300 Steel Sectional Garage Door up to 9'-0" Wide

APPROVAL DOCUMENT: Drawing No. **329928**, titled "Models 8024/8124 Windload Specification Option Code 1300", sheets 1 through 3 of 3, dated 05/04/2007, with last revision P3 dated 05/19/2010, prepared by the manufacturer, signed and sealed by John E. Scates, P.E., bearing the Miami-Dade County Product Control renewal stamp with the NOA number and expiration date by the Miami-Dade County Product Control Section.

MISSILE IMPACT RATING: Large & Small Missile Impact Resistant

LABELING: A permanent label with the manufacturer's name or logo, manufacturing address, model/series number, the positive and negative design pressure rating, indicate impact rated if applicable, installation instruction drawing reference number, approval number (NOA), the applicable test standards, and the statement reading 'Miami-Dade County Product Control Approved' is to be located on the door's side track, bottom angle, or inner surface of a panel.

RENEWAL of this NOA shall be considered after a renewal application has been filed and there has been no change in the applicable building code negatively affecting the performance of this product.

TERMINATION of this NOA will occur after the expiration date or if there has been a revision or change in the materials, use, and/or manufacture of the product or process. Misuse of this NOA as an endorsement of any product, for sales, advertising or any other purposes shall automatically terminate this NOA. Failure to comply with any section of this NOA shall be cause for termination and removal of NOA.

ADVERTISEMENT: The NOA number preceded by the words Miami-Dade County, Florida, and followed by the expiration date may be displayed in advertising literature. If any portion of the NOA is displayed, then it shall be done in its entirety.

INSPECTION: A copy of this entire NOA shall be provided to the user by the manufacturer or its distributors and shall be available for inspection at the job site at the request of the Building Official.

This NOA **renews NOA # 11-0411.04** and consists of this page 1 and evidence page E-1, as well as approval document mentioned above.

The submitted documentation was reviewed by **Carlos M. Utrera, P.E.**

MIAMI-DADE COUNTY APPROVED

12/20/2012

NOA No: 12-0215.05
Expiration Date: September 27, 2017
Approval Date: December 27, 2012

NOTICE OF ACCEPTANCE: EVIDENCE SUBMITTED

A. DRAWINGS *"Submitted under NOA # 11-0411.04"*

1. Drawing No. **329928**, titled "Models 8024/8124 Windload Specification Option Code 1300", sheets 1 through 3 of 3, dated 05/04/2007, with last revision P3 dated 05/19/2010, prepared by the manufacturer, signed and sealed by John E. Scates, P.E.

B. TESTS

1. Test report on Forced Entry Resistance Test, per FBC TAS 202 of a Series/Model 8024/8124 Garage Door, prepared by Architectural Testing, Inc, dated 12/13/2012, signed and sealed by Vinu J. Abraham, P.E.

"Submitted under NOA # 08-0304.02"

2. Test report on: 1) Uniform Static Air Pressure Test, per FBC, TAS 202-94
   2) Large Missile Impact Test, per FBC, TAS 201-94
   3) Cyclic Wind Pressure Loading Test, per FBC, TAS 203-94,

   along with marked-up drawings, prepared by Certified Testing Laboratories, Inc., Test Report # **CTLA 1734W-2**, dated 11/09/2007, signed and sealed by Ramesh Patel, P.E.

"Submitted under NOA # 07-0803.10"

3. **Test** report on: 1) Uniform Static Air Pressure Test, per FBC, TAS 202-94
   2) Large Missile Impact Test, per FBC, TAS 201-94
   3) Cyclic Wind Pressure Loading Test, per FBC, TAS 203-94,

   along with marked-up drawings, prepared by Certified Testing Laboratories, Inc., Test Report # **CTLA 1672W-3**, dated 05/21/2007, signed and sealed by Ramesh Patel, P.E.

C. CALCULATIONS *"Submitted under NOA # 11-0411.04"*

1. Jambs anchoring calculations prepared by John E. Scates, Professional Engineer, dated 12/08/2010, signed and sealed by John E. Scates, P.E.

D. MATERIAL CERTIFICATIONS *"Submitted under NOA # 07-0803.10"*

1. Test report on Tensile Test, per ASTM E8, dated 05/22/2007, prepared by Certified Testing Laboratories, Inc., Report # CTLAW, signed and sealed by Ramesh Patel, P.E.
2. Notice of Acceptance No. **12-0605.05,** issued to Bayer MaterialScience LLC (MA), for their Makrolon Polycarbonate Sheets, approved on 12/06/2012 and expiring on 08/27/2017.

E. QUALITY ASSURANCE

1. Miami-Dade Department of Regulatory and Economic Resources (RER)

F. STATEMENTS

1. Statement letter of code conformance to 2010 FBC and no financial interest, issued by John E. Scates, Professional Engineer, dated 10/28/2011, signed and sealed by John E. Scates, P.E.

12/20/2012

Carlos M. Utrera, P.E.
Product Control Examiner
NOA No 12-0215.05
Expiration Date: September 27, 2017
Approval Date: December 27, 2012

NOTES:

1. IMPACT RESISTANT GLAZING SYSTEM MAY BE INSTALLED IN TOP OR INTERMEDIATE SECTION (WITH OR WITHOUT DECORATIVE INSERTS). GLAZING SHALL BE 1/4" MAKROLON-AR POLYCARBONATE (MIAMI-DADE NOA #10-0329.03) OR EQUAL. MAXIMUM GLAZING DIMENSIONS SHALL BE 18.56" x 12.26". SEE DETAIL A ON SHEET 2 FOR ASSEMBLY DETAILS. P2 P3

2. VINYL OR WOOD DOOR STOP NAILED A MAXIMUM OF 6" O.C. MUST OVERLAP TOP AND BOTH ENDS OF PANELS MINIMUM 7/16" TO MEET NEGATIVE PRESSURES.

3. KEY LOCK, SLIDE LOCK, OR OPERATOR REQUIRED.

4. SECTION STEEL TO HAVE A MINIMUM 24 GA THICKNESS WITH A MINIMUM G90 COATING AND A MINIMUM YIELD STRENGTH OF 33.6 KSI.

5. THE DESIGN OF THE SUPPORTING STRUCTURAL ELEMENTS SHALL BE THE RESPONSIBILITY OF THE PROFESSIONAL OF RECORD FOR THE BUILDING OR STRUCTURE AND IN ACCORDANCE WITH CURRENT BUILDING CODES FOR THE LOADS LISTED ON THIS DRAWING.

6. WOOD SUBSTRATE FOR DOOR JAMB IS TO BE MINIMUM 2x6 NO. 3 SOUTHERN PINE RELATIVELY KNOT FREE. REFER TO SHEET 3 FOR ATTACHMENT TO SUPPORTING STRUCTURE. FOR DIRECT MOUNTING OF JAMB BRACKETS TO OTHER SUBSTRATES, SEE JAMB DETAIL SHEET 2. FOR MOUNTING OF CONTINOUS WALL ANGLE, SEE CONTINOUS WALL ANGLE DETAIL SHEET 3. P1

7. FOR LOW HEAD ROOM LIFT CONDITIONS, TOP BRACKET SHALL BE A 13 GA LHR 7/4 TOP BRACKET WITH A MINIMUM OF (3) 1/4-14x7/8" SELF DRILLING CRIMPTITE SCREWS IN LIEU OF THE BRACKET SHOWN ON THIS DRAWING. U-BAR ON TOP SECTION SHALL BE INSTALLED ON TOP OF LHR TOP BRACKETS.

8. LOUVERS MAY BE INSTALLED ON THE DOOR IF THE TOTAL AREA OF THE LOUVER DOES NOT EXCEED 60 SQUARE INCHES. P2

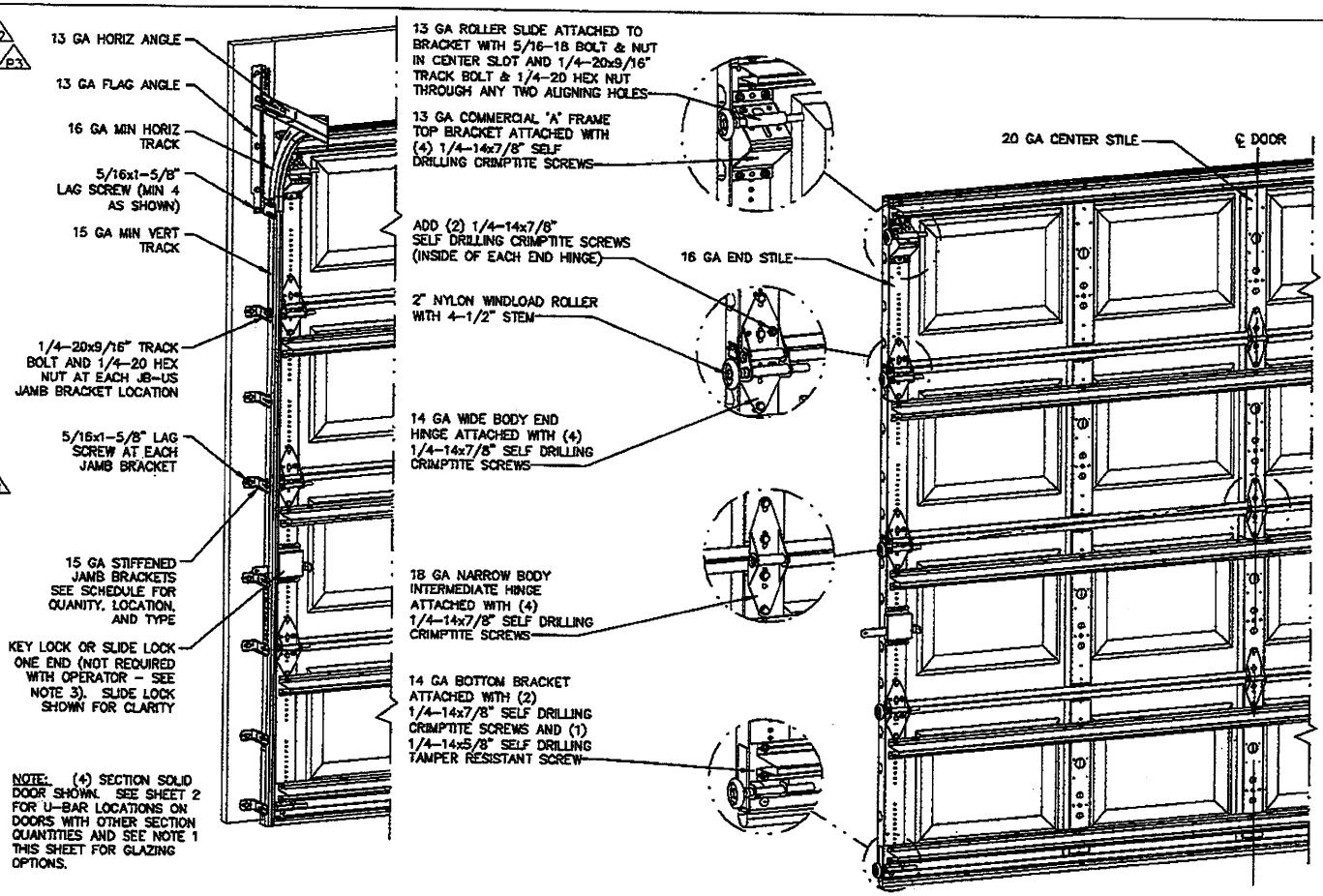

NOTE: (4) SECTION SOLID DOOR SHOWN. SEE SHEET 2 FOR U-BAR LOCATIONS ON DOORS WITH OTHER SECTION QUANTITIES AND SEE NOTE 1 THIS SHEET FOR GLAZING OPTIONS.

REVISIONS

P1 MODIFIED TRACK NOTE FOR DOORS WITH DECORATIVE OVERLAYS. ADDED CONTINUOUS WALL ANGLE DETAIL SHEET 3. UPDATED NOTES FOR CONTINOUS WALL ANGLE MOUNTING.
GRT 10/1/07

P2 ADDED IMPACT RESISTANT GLAZING. MODIFIED NOTES SHEET 1 FOR GLAZING. ADDED DETAIL A SHEET 2 FOR GLAZING.
GRT 11/10/07

P3 UPDATED TITLE BLOCK. ADDED STRUT PROFILE. UPDATED POLYCARBONATE NOA.
GRT 5/19/10

SUPERIMPOSED DESIGN PRESSURE LOADS ON SUPPORTING STRUCTURE

DOOR WIDTH	DOOR HEIGHT	UNIFORM LOAD EACH JAMB (PLF)
8'-0"	ALL	+184.0/-208.0
9'-0"	ALL	+207.0/-234.0

JAMB BRACKET SCHEDULE

DOOR HEIGHT	NO. OF SECTIONS	NO. OF JAMB BRACKETS (EACH JAMB)	LOCATION OF CENTERLINE OF JAMB BRACKETS MEASURED FROM BOTTOM OF TRACK (ALL DIMENSIONS ± 2")
6'-6"	4	7	2" (JB-US), 10" (JB-US), 21-3/4" (JB-US), 29-3/4" (JB-US), 39" (JB-US), 48" (JB-US), 57-1/4" (JB-US)
7'-0"	4	7	2" (JB-US), 10" (JB-US), 21-3/4" (JB-US), 29-3/4" (JB-US), 42" (JB-US), 52-1/2" (JB-US), 63-1/4" (JB-US)
7'-6"	5	8	2" (JB-US), 10" (JB-US), 18-3/4" (JB-US), 26-3/4" (JB-US), 36" (JB-US), 45" (JB-US), 54-1/4" (JB-US), 74-1/2" (JB-US)
8'-0"	5	8	2" (JB-US), 10" (JB-US), 21-3/4" (JB-US), 29-3/4" (JB-US), 39" (JB-US), 48" (JB-US), 57-1/2" (JB-US), 75-1/2" (JB-US)
> 8'-0"			SEE NOTE BELOW

NOTE:
(JB-US) FOLLOWING DIMENSION DENOTES SLOTTED JAMB BRACKET ATTACHED TO TRACK WITH 1/4-20x9/16" TRACK BOLT AND NUT AS SHOWN ABOVE.

ALL DOORS GREATER THAN 8' IN HEIGHT OR WITH DECORATIVE OVERLAY REQUIRE USE OF CONTINUOUS WALL ANGLE. SEE SHEET 3 FOR DETAILS.

P1

PRODUCT RENEWED
as complying with the Florida Building Code
Acceptance No 12-0215.05
Expiration Date 09/27/2017
By _____
Miami Dade Product Control

PRODUCT REVISED
as complying with the Florida Building Code
Acceptance No 11-0411.04
Expiration Date 09/27/2012
By _____
Miami Dade Product Control

John E. Scates 12/8/10

JOHN E. SCATES, PE
3121 FAIRGATE DR.
CARROLLTON, TX 75007
FL PE 51737 TX PE 56308/F2203

PROFESSIONAL ENGINEER'S SEAL PROVIDED ONLY FOR VERIFICATION OF WINDLOAD CONSTRUCTION DETAILS.

Wayne Dalton®
A DIVISION OF OVERHEAD DOOR CORP
3395 ADDISON DRIVE
PENSACOLA, FLORIDA 32514
(850) 474-9890

STATIC PRESSURE RATINGS		APPROVED SIZES		SCALE: N.T.S.		SIZE: A
DESIGN (PSF):	+46.00/-52.00	MAX WIDTH:	9'-0"		DATE	NAME
TEST (PSF):	+69.00/-78.00	MAX HEIGHT:	14'-0"	DRAWN	2/22/07	GRT
IMPACT/CYCLIC RATED (YES/NO):	YES	MAX SECTION HEIGHT:	21"	CHECKED	5/4/07	MRB

MODELS 8024/8124

SHEET 1 OF 3

WINDLOAD SPECIFICATION OPTION CODE 1300

DRAWING PART NO. 329928 REV. P3

CENTER STILE & INTERMEDIATE HINGE LOCATIONS

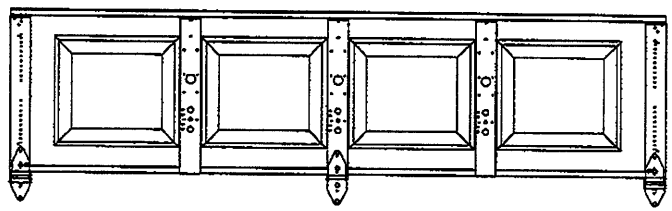

U-BAR LOCATIONS

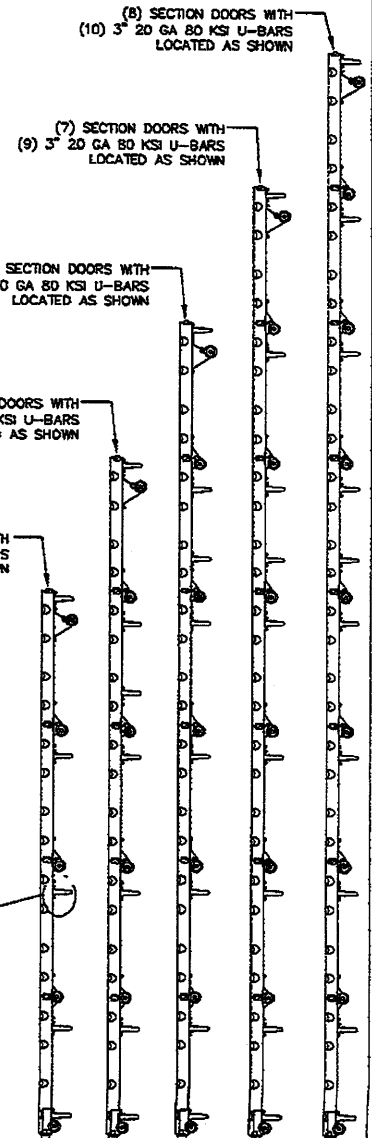

REVISIONS
P1 MODIFIED TRACK NOTE FOR DOORS WITH DECORATIVE OVERLAYS. ADDED CONTINUOUS WALL ANGLE DETAIL SHEET 3. UPDATED NOTES FOR CONTINOUS WALL ANGLE MOUNTING. GRT 10/1/07
P2 ADDED IMPACT RESISTANT GLAZING. MODIFIED NOTES SHEET 1 FOR GLAZING. ADDED DETAIL A SHEET 2 FOR GLAZING. GRT 11/10/07
P3 UPDATED TITLE BLOCK. ADDED STRUT PROFILE. UPDATED POLYCARBONATE NOA. GRT 5/19/10

PRODUCT RENEWED
as complying with the Florida
Building Code
Acceptance No 12-0215.05
Expiration Date 09/27/2017
By
Miami Dade Product Control

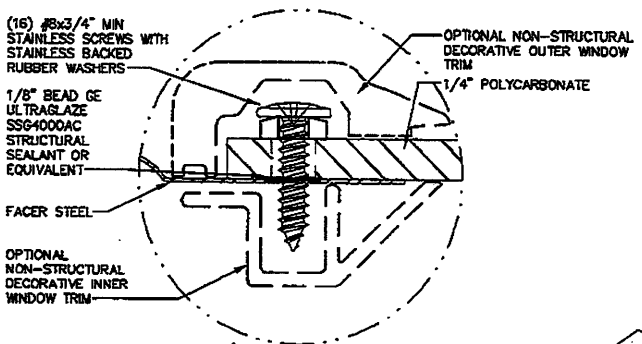

P2 DETAIL A

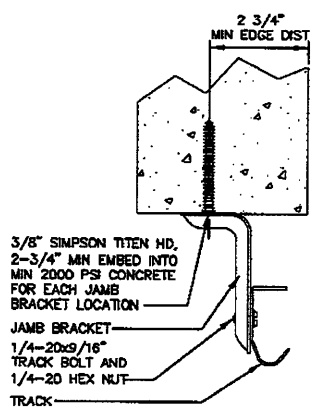

CONCRETE MOUNTING DETAIL

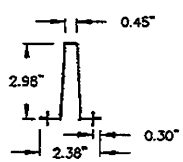

STRUT PROFILE P3

PRODUCT REVISED
as complying with the Florida
Building Code
Acceptance No 11-0411.04
Expiration Date 09/27/2012
By
Miami Dade Product Control

John E. Scates
12/8/10
JOHN E. SCATES, PE
3121 FAIRGATE DR.
CARROLLTON, TX 75007
FL PE 51737 TX PE 56308/F2203

PROFESSIONAL ENGINEER'S SEAL PROVIDED ONLY FOR VERIFICATION OF WINDLOAD CONSTRUCTION DETAILS.

Wayne® Dalton
A DIVISION OF OVERHEAD DOOR CORP
3395 ADDISON DRIVE
PENSACOLA, FLORIDA 32514
(850) 474-9890

STATIC PRESSURE RATINGS		APPROVED SIZES		SCALE: N.T.S.		SIZE: A
DESIGN (PSF):	+46.00/-52.00	MAX WIDTH:	9'-0"		DATE	NAME
TEST (PSF):	+69.00/-78.00	MAX HEIGHT:	14'-0"	DRAWN	2/22/07	GRT
IMPACT/CYCLIC RATED (YES/NO):	YES	MAX SECTION HEIGHT:	21"	CHECKED	5/4/07	MRB

MODELS 8024/8124

SHEET 2 OF 3

WINDLOAD SPECIFICATION OPTION CODE 1300

DRAWING PART NO. 329928 REV. P3

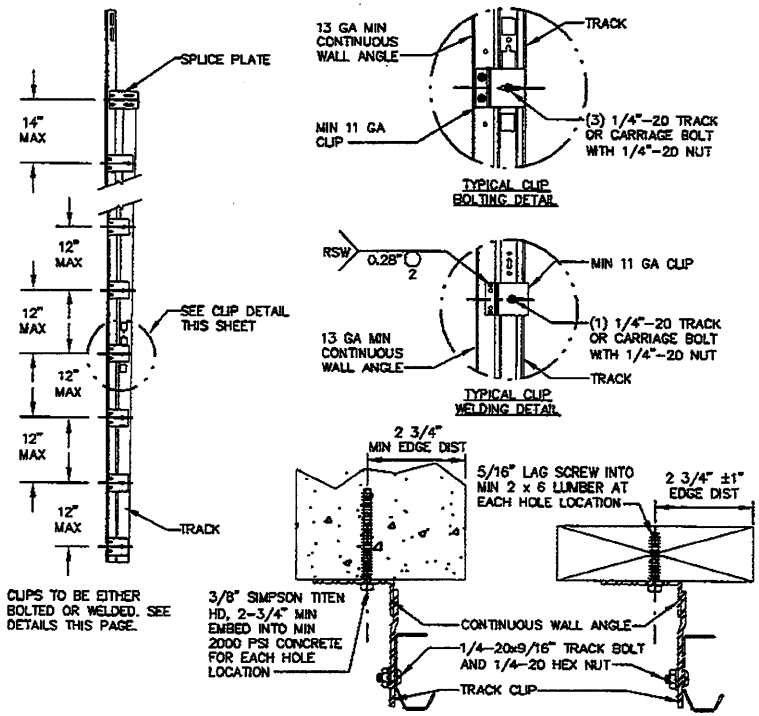

P1 CONTINOUS WALL ANGLE DETAILS

MAX SPACING OF ANCHORS/SCREWS PER JAMB (IN)		
3/8" SIMPSON TITEN HD SCREW ANCHOR TO MINIMUM 2000 PSI CONCRETE NOTE 1	3/8" SIMPSON TITEN HD SCREW ANCHOR TO MINIMUM 2000 PSI GROUT FILLED CMU NOTE 2	3/8" X 3" LONG LAG SCREW NOTE 3
24	24	24

1. BASED ON 3/8" SIMPSON TITEN HEAVY DUTY SCREW ANCHOR WITH A 1" O.D. WASHER INTO CONCRETE WITH A MINIMUN EMBEDMENT DEPTH OF 2-3/4" AND A MINIMUN EDGE DISTANCE OF 2-3/4".
2. BASED ON 3/8" SIMPSON TITEN HEAVY DUTY SCREW ANCHOR WITH A 1" O.D. WASHER INTO GROUT FILLED CMU WITH A MINIMUM EMBEDMENT DEPTH OF 2-3/4". A MINIMUM EDGE DISTANCE OF 4", AND A MINIMUM END DISTANCE OF 4". CONCRETE MASONRY UNITS SHALL CONFORM TO ASTM C90 AND GROUT SHALL CONFORM TO ASTM C476.
3. BASED ON 3/8" DIAMETER x 3" LONG LAG SCREWS WITH 1" O.D. WASHERS WITH A 1-9/32" THREAD PENETRATION INTO SEASONED DRY WOOD SUPPORTING STRUCTURE.
4. PROVIDE QUANTITY OF SCREW ANCHORS OR LAG SCREWS AS REQUIRED TO MAINTAIN MAXIMUM SPACING AS SHOWN IN TABLE WITH A MINIMUM OF THREE (3) SCREW ANCHORS OR LAG SCREWS PER JAMB. SCREW ANCHORS OR LAG SCREWS AT TOP AND BOTTOM OF JAMB SHALL BE PLACED A MAXIMUM OF 6" FROM THE END OF THE JAMB.
5. LOAD PER JAMB CALCULATED TO BE A MAXIMUM OF +207.0/-234.0 LBS PER FOOT.
6. CHART INCLUDES A SAFETY FACTOR OF 4.
7. DOOR JAMB TO BE MINIMUM 2x6 NO. 3 SOUTHERN PINE LUMBER (MIN) MOUNTED DIRECTLY TO SUPPORT STRUCTURE.
8. DESIGN OF THE SUPPORT STRUCTURE SHALL BE THE SOLE RESPONSIBILITY OF THE BUILDING DESIGNER AND SHALL BE DESIGNED FOR THE LOADS LISTED IN NOTE 5.
9. SCREW ANCHORS OR LAG SCREWS SHALL BE INSTALLED PER MANUFACTURER'S WRITTEN INSTRUCTIONS.

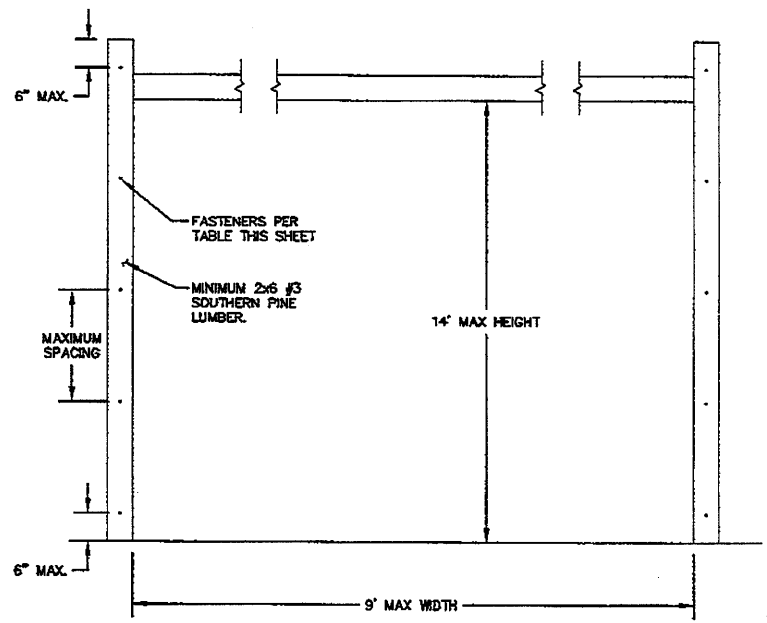

REVISIONS

P1 MODIFIED TRACK NOTE FOR DOORS WITH DECORATIVE OVERLAYS. ADDED CONTINUOUS WALL ANGLE DETAIL SHEET 3. UPDATED NOTES FOR CONTINOUS WALL ANGLE MOUNTING.
GRT 10/1/07

P2 ADDED IMPACT RESISTANT GLAZING. MODIFIED NOTES SHEET 1 FOR GLAZING. ADDED DETAIL A SHEET 2 FOR GLAZING.
GRT 11/10/07

P3 UPDATED TITLE BLOCK. ADDED STRUT PROFILE. UPDATED POLYCARBONATE NOA.
GRT 5/19/10

PRODUCT RENEWED
as complying with the Florida Building Code
Acceptance No 12-0215.05
Expiration Date 09/27/2017
By _____
Miami Dade Product Control

PRODUCT REVISED
as complying with the Florida Building Code
Acceptance No 11-0411.04
Expiration Date 09/27/2012
By _____
Miami Dade Product Control

John E. Scates 12/8/10

JOHN E. SCATES, PE
3121 FAIRGATE DR.
CARROLLTON, TX 75007
FL PE 51737 TX PE 56308/F2203

PROFESSIONAL ENGINEER'S SEAL PROVIDED ONLY FOR VERIFICATION OF WINDLOAD CONSTRUCTION DETAILS.

Wayne® Dalton

A DIVISION OF OVERHEAD DOOR CORP
3395 ADDISON DRIVE
PENSACOLA, FLORIDA 32514
(850) 474-9890

STATIC PRESSURE RATINGS		APPROVED SIZES		SCALE: N.T.S.		SIZE: A
DESIGN (PSF):	+46.00/-52.00	MAX WIDTH:	9'-0"		DATE	NAME
TEST (PSF):	+69.00/-78.00	MAX HEIGHT:	14'-0"	DRAWN	2/22/07	GRT
IMPACT/CYCLIC RATED (YES/NO):	YES	MAX SECTION HEIGHT:	21"	CHECKED	5/4/07	MRB

MODELS 8024/8124

WINDLOAD SPECIFICATION OPTION CODE 1300

SHEET 3 OF 3

DRAWING PART NO. 329928 REV. P3