MIAMI-DADE COUNTY
DEPARTMENT OF PERMITTING, ENVIRONMENT, AND REGULATORY AFFAIRS (PERA)
BOARD AND CODE ADMINISTRATION DIVISION

NOTICE OF ACCEPTANCE (NOA)

MIAMI-DADE COUNTY
PRODUCT CONTROL SECTION
11805 SW 26 Street, Room 208
Miami, Florida 33175-2474
T (786) 315-2590 F (786) 315-2599
www.miamidade.gov/pera/

Daybar Industries Limited
50 West Drive
Brampton, Ontario, Canada L6T2J4

SCOPE:

This NOA is being issued under the applicable rules and regulations governing the use of construction materials. The documentation submitted has been reviewed and accepted by Miami-Dade County PERA -Product Control Section to be used in Miami Dade County and other areas where allowed by the Authority Having Jurisdiction (AHJ).

This NOA shall not be valid after the expiration date stated below. The Miami-Dade County Product Control Section (In Miami Dade County) and/or the AHJ (in areas other than Miami Dade County) reserve the right to have this product or material tested for quality assurance purposes. If this product or material fails to perform in the accepted manner, the manufacturer will incur the expense of such testing and the AHJ may immediately revoke, modify, or suspend the use of such product or material within their jurisdiction. PERA reserves the right to revoke this acceptance, if it is determined by Miami-Dade County Product Control Section that this product or material fails to meet the requirements of the applicable building code.

This product is approved as described herein, and has been designed to comply with the Florida Building Code, including the High Velocity Hurricane Zone.

DESCRIPTION: Series "LS18" Single Flush Outswing Commercial Steel Door w/ Series"AS" frames & w/wo Panic Exit Devices

APPROVAL DOCUMENT: Drawing No. **12-011**, dated 01/07/12, titled "Series LS18 Flush Outswing Commercial Steel Door w/Series "AS" Frame", sheets 1, 1A, 2 through 13, 13A and 14 of 14, prepared by Tilteco Inc., signed and sealed by Walter A. Tillit Jr., P.E., signed and sealed by Walter A. Tillit Jr. , P. E., bearing the Miami-Dade County Product Control Revision stamp with the Notice of Acceptance number and expiration date by the Miami-Dade County Product Control Section.

MISSILE IMPACT RATING: Large and Small Missile Impact Resistant

LABELING: Each unit shall bear a permanent label with the manufacturer's name or logo, Brampton, Ontario and series and following statement: "Miami-Dade County Product Control Approved", noted herein.

RENEWAL of this NOA shall be considered after a renewal application has been filed and there has been no change in the applicable building code negatively affecting the performance of this product.

TERMINATION of this NOA will occur after the expiration date or if there has been a revision or change in the materials, use, and/or manufacture of the product or process. Misuse of this NOA as an endorsement of any product, for sales, advertising or any other purposes shall automatically terminate this NOA. Failure to comply with any section of this NOA shall be cause for termination and removal of NOA.

ADVERTISEMENT: The NOA number preceded by the words Miami-Dade County, Florida, and followed by the expiration date may be displayed in advertising literature. If any portion of the NOA is displayed, then it shall be done in its entirety.

INSPECTION: A copy of this entire NOA shall be provided to the user by the manufacturer or its distributors and shall be available for inspection at the job site at the request of the Building Official.

This NOA **revises # 09-0323.23**and consists of this page 1 and evidence pages E-1, as well as approval document mentioned above.

The submitted documentation was reviewed by **Ishaq I. Chanda, P.E.**

MIAMI-DADE COUNTY APPROVED

4/27/12

NOA No 12-0216.06
Expiration Date: April 10, 2013
Approval Date: May 03, 2012

NOTICE OF ACCEPTANCE: EVIDENCE SUBMITTED

A. DRAWINGS

1. Manufacturer's parts and sections drawings (transferred from file **# 09-0323.23**).
2. Drawing No. **12-011**, dated 01/07/12, titled "Series LS18 Flush Outswing Commercial Steel Door w/Series "AS" Frame", sheets 1, 1A, 2 through 13, 13A and 14 of 14, prepared by Tilteco Inc., signed and sealed by Walter A. Tillit Jr., P.E.
   Note: This revision is FBC 2010 notes update only.

B. TESTS (transferred from file # 09-0323.23/08-0110.12) Original test conducted per SFBC PA 201, 202 and 203-94, now termed as TAS 201, 202 and 203-94.

1. Test reports on 1) Air Infiltration Test, per FBC, TAS 202-94 (except sp# 7 louver)
   2) Uniform Static Air Pressure Test, Loading per FBC, TAS 202-94
   3) Water Resistant Test, per FBC, TAS 202-94 (except sp# 7 louver)
   4) Large Missile Impact Test per FBC, TAS 201-94
   5) Cyclic Wind Pressure Loading per FBC, TAS 203-94
   6) Forced Entry Test, per FBC 2411.3.2.1 (b) and TAS 202-94

Along with marked-up drawings and installation diagram of outswing steel door, prepared by Hurricane Testing Laboratory, LLC, Test Report No. **HTL-0279-1017.01**, dated 10/17/01, signed and sealed by Vinu J. Abraham, P.E.

C. CALCULATIONS

1. Anchor Verification Calculations, complying w/ FBC-2004, dated 06-16-2005, prepared, signed and sealed by Walter A. Tillit Jr., P. E. (transferred from files **# 09-0323.23/ 08-0110.12**).

D. QUALITY ASSURANCE

1. Miami Dade Department of Permitting, Environment, and Regulatory Affairs (PERA).

E. MATERIAL CERTIFICATIONS

1. Tensile Test report No Test Report No. **QCM-2EM-613**, dated May 28, 2002, issued by Q C Metallurgical, Inc, per ASTME-8, signed & sealed by Robert Kelly. (transferred from file **# 09-0323.22// 08-0110.12**)
2. Notice of Acceptance No. **11-0920.07** issued to Dyplast Product, LLC (Former Apache Products Company) for "EPS-Expanded Polystyrene Insulation", expiring on 01/11/17.

F. STATEMENTS

1. Statement letter of compliance to FBC-2010, dated FEB 15, 2010, issued by Tilteco Inc., signed and sealed by Walter A. Tillit Jr., P. E.
2. Statement letter of compliance to FBC-2007, dated April 29, 2009, signed and sealed by Walter A. Tillit Jr., P. E. (*Transferred from File* **# 09-0323.22**)
3. Statement letter of anchor verification compliance to FBC-2004, dated June 10, 2005, signed by Walter A. Tillit Jr., P. E. (*Transferred from File* **# 06-0612.03**)
4. Statement letter of compliance issued by Hurricane Testing Laboratories, as part of above referenced test report.

G. OTHER

1. This NOA **revises** NOA **# 09-0323.23,** expiring **04/10/13 (Non-Renewable, unless re-tested)**
2. Manufacturer/Distributor agreement between Daybar Industries Limited, Canada and Daybar Southeast Service Center, Key Largo, USA, signed by Mark Dodson and Bob Wolfe, respective officials of the companies. (original in file #11-0520.06)
3. Letter dated 11/17/04 issued by U-can Fastening Product for material property, signed by Paul Marial, P.E.

Ishaq I. Chanda

Ishaq I. Chanda, P.E.
Product Control Examiner
NOA No 12-0216.06
Expiration Date: April 10, 2013
Approval Date: May 03, 2012

SHEETS CONTENT:

PAGE #1 INDEX & COVER PAGE
PAGE #1A ASSEMBLY ELEVATIONS, (DETAILS #20,21,22)
PAGE #2 TYPICAL SECTION THROUGH, VERTICAL/HORIZONTAL.
PAGE #3 FRAME SECTIONS AND REINFORCINGS, (DETAILS #15,16,17,18,19)
PAGE #4 DOOR SECTION THROUGH EDGE SEAM, (DETAIL #6)
PAGE #5 DOOR TOP AND BOTTOM TYPICAL END CHANNEL, (DETAIL #12)
PAGE #6 DOOR SURFACE CLOSER REINFORCING, (DETAIL #11)
PAGE #7 DOOR SURFACE CLOSER REINF AND END CHANNEL ASSEMBLY, (DETAIL #13)
PAGE #8 DOOR STEEL TOP CAP, (DETAIL #14)
PAGE #9 DOOR HINGE REINFORCING.
PAGE #10 ANSI #A115.1 #86 MORTISE LOCK,RP REINFORCINGS, (DETAIL #9)
PAGE #11 #161 LOCK, REINFORCINGS, (DETAIL #8)
PAGE #12 RIM PANIC SURFACE BOLT REINFORCINGS, (DETAIL #10)
PAGE #13 13A ANCHOR OPTIONS AND DETAILS
PAGE #14 BILL OF MATERIALS

MAX. A.S.D. DESIGN PRESSURE RATING
+90, -90 PSF

GENERAL NOTES AND SPECIFICATIONS:

1. SINGLE SERIES LS18 FLUSH/EMBOSSED OUTSWING COMMERCIAL STEEL DOOR W/SERIES "AS" FRAME, SHOWN ON THIS PRODUCT APPROVAL DOCUMENT (P.A.D.) HAS BEEN VERIFIED FOR CODE COMPLIANCE IN ACCORDANCE WITH THE 2007 & 2010 EDITIONS OF THE FLORIDA BUILDING CODE. DOOR MAY BE INSTALLED AT HIGH VELOCITY HURRICANE ZONES.

DESIGN WIND LOADS SHALL BE DETERMINED AS PER SECTIONS **1620** OF THE ABOVE MENTIONED CODES, USING ASCE 7-05 STANDARD FOR INSTALLATIONS UNDER 2007 FBC & ASCE 7-10 FOR INSTALLATIONS UNDER 2010 FBC AND SHALL NOT EXCEED THE MAXIMUM (A.S.D.) DESIGN PRESSURE RATINGS INDICATED ON THIS SHEET.

IN ORDER TO VERIFY THE ABOVE CONDITION, ULTIMATE DESIGN WIND LOADS DETERMINED PER ASCE 7-10 SHALL BE FIRST REDUCED TO A.S.D. DESIGN WIND LOADS BY MULTIPLYING THEM BY 0.6 IN ORDER TO COMPARE THESE W/ MAX. (A.S.D.) DESIGN PRESSURE RATINGS INDICATED ON THIS SHEET.

THIS DOOR'S ADEQUACY FOR WIND AND IMPACT LOAD HAS BEEN VERIFIED IN ACCORDANCE WITH SECTION **1626** OF THE ABOVE MENTIONED CODE AS PER PROTOCOLS TAS-201, TAS-202, TAS-203 AS PER HTL LAB REPORT #0279-1017-01 AND AS PER SUBMITTED STRUCTURAL CALCULATIONS, PERFORMED AS PER SECTIONS **1612** & **1615** OF THE FLORIDA BUILDING CODE, 2007 & 2010 EDITIONS, RESPECTIVELY.

2. ALL COMPONENTS SHALL BE AS SPECIFIED ON APPLICABLE DETAIL SHEETS AND AT BILL OF MATERIALS (SHEET 14) OF THIS DRAWING.

3. COMPLIANCE OF EGRESS / ESCAPE REQUIREMENTS OF THESE DOORS PER FBC TO BE DETERMINED BY BUILDING OFFICIALS ON A CASE-BY-CASE BASIS.

4. ALL SCREWS USED FOR ASSEMBLY CONNECTIONS (METAL TO METAL) TO BE STAINLESS STEEL 304 OR 316 AISI SERIES OR CORROSION RESISTANT COATED CARBON STEEL AS PER DIN 50018 WITH 50 ksi YIELD STRENGTH AND 90 ksi TENSILE STRENGTH & SHALL COMPLY W/ FLORIDA BUILDING CODE SECTION 2411.3.3.4.

5. ALL WELDING TO CONFORM W/AMERICAN WELDING SOCIETY A.W.S. D.1.3 AND D-19.0 REGULATIONS. USE E60XX ELECTRODES

6. ALL ANCHORS FOR DOOR FRAME CONNECTIONS TO EXISTING STRUCTURE SHALL BE AS SPECIFIED ON SHEET 13 OF THIS DRAWING.
MAXIMUM ANCHORS SPACINGS SHALL BE AS PER ELEVATIONS ON SHEET 1A OF THIS DRAWING.

7. PROVIDE 1/4" MAX. LOAD BEARING SHIM SPACE.

8. **THIS DOOR WILL NOT REQUIRE A HURRICANE PROTECTION DEVICE.**

9. THESE DOOR ASSEMBLIES ARE APPROVED FOR WATER AND AIR INFILTRATION AS PER TESTING INDICATED ON NOTE 1, AND SHALL BE LIMITED TO DESIGN PRESSURE RATINGS INDICATED ON THIS SHEET.

10. PROVIDE SPECIFIED SEALANT AT ALL DOOR FRAME AND THRESHOLD.

11. (a) THIS PRODUCT APPROVAL DOCUMENT (P.A.D.) PREPARED BY THIS ENGINEER IS GENERIC AND DOES NOT PROVIDE INFORMATION FOR A SITE SPECIFIC PROJECT; i.e. WHERE THE SITE CONDITIONS DEVIATE FROM THE P.A.D.

(b) CONTRACTOR TO BE RESPONSIBLE FOR THE SELECTION, PURCHASE AND INSTALLATION INCLUDING LIFE SAFETY OF THIS PRODUCT, BASED ON THIS P.A.D., PROVIDED HE/SHE DOES NOT DEVIATE FROM THE CONDITIONS DETAILED ON THIS DOCUMENT. CONSTRUCTION SAFETY AT SITE IS THE CONTRACTOR'S RESPONSIBILITY.

(c) THIS PRODUCT APPROVAL DOCUMENT (P.A.D.) WILL BE CONSIDERED INVALID IF ALTERED BY ANY MEANS.

(d) ORIGINAL P.A.D. SHALL BEAR THE DATE, SEAL AND SIGNATURE OF THE PROFESSIONAL ENGINEER OF RECORD THAT PREPARED IT.

12. DOOR'S MANUFACTURER LABEL SHALL BE PLACED ON A READILY VISIBLE LOCATION. ONE LABEL SHALL BE PLACED FOR EVERY OPENING. LABEL SHALL READ AS FOLLOWS:
DAYBAR INDUSTRIES LTD
50 WEST DRIVE, BRAMPTON,
ON CANADA, L6T 2J4.
MIAMI-DADE COUNTY PRODUCT CONTROL APPROVED.

PRODUCT REVISED
as complying with the Florida Building Code
Acceptance No 12-0216.06
Expiration Date APR 10, 2013
By Shaq I. Chauda
Miami Dade Product Control

WALTER A. TILLIT JR. LICENSE No. 44167 STATE OF FLORIDA PROFESSIONAL ENGINEER

FLORIDA BUILDING CODE (HIGH VELOCITY HURRICANE ZONE)

© 2012 TILTECO INC. (ENGINEERING)

TILTECO INC.
TILLIT TESTING & ENGINEERING COMPANY
6355N.W. 36th. St. Ste. 305, VIRGINIA GARDENS, FL 33166
Phone : (305)871-1530 . Fax : (305)871-1531
e-mail: tilteco@aol.com
EB-0006719
WALTER A. TILLIT Jr. P.E.
FLORIDA Lic. # 44167

SERIES LS18 FLUSH OUTSWING COMMERCIAL STEEL DOOR W/SERIES "AS" STEEL FRAME

DAYBAR INDUSTRIES LTD
50 WEST DRIVE, BRAMPTON,
ON CANADA, L6T 2J4
TEL: 905 625-8000 FAX: 905 625-4204

REV. No	DESCRIPTION	DATE	REV. No	DESCRIPTION	DATE
1	OLD 09-031	01/17/12	3		
2	–	–	4		

DRAWN BY: L.G./A.G.
01/17/12 DATE
12-011 DRAWING No
SHEET 1 OF 14

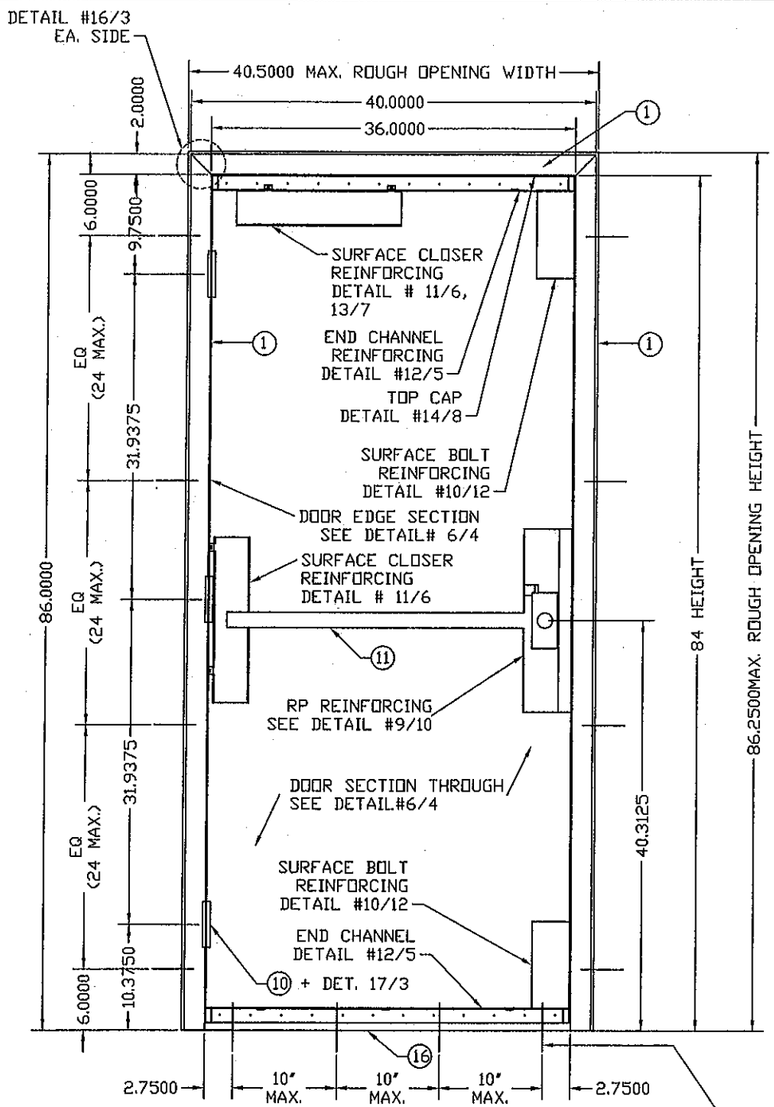

ASSEMBLY #1 ELEVATION SINGLE DOOR EXTERIOR VIEW (OUTSWING)
WALL CONDITION - EXISTING MASONRY OR WOOD STUD WALL
ANCHOR: E.M.A DETAIL #22
DETEX RIM EXIT DEVICE

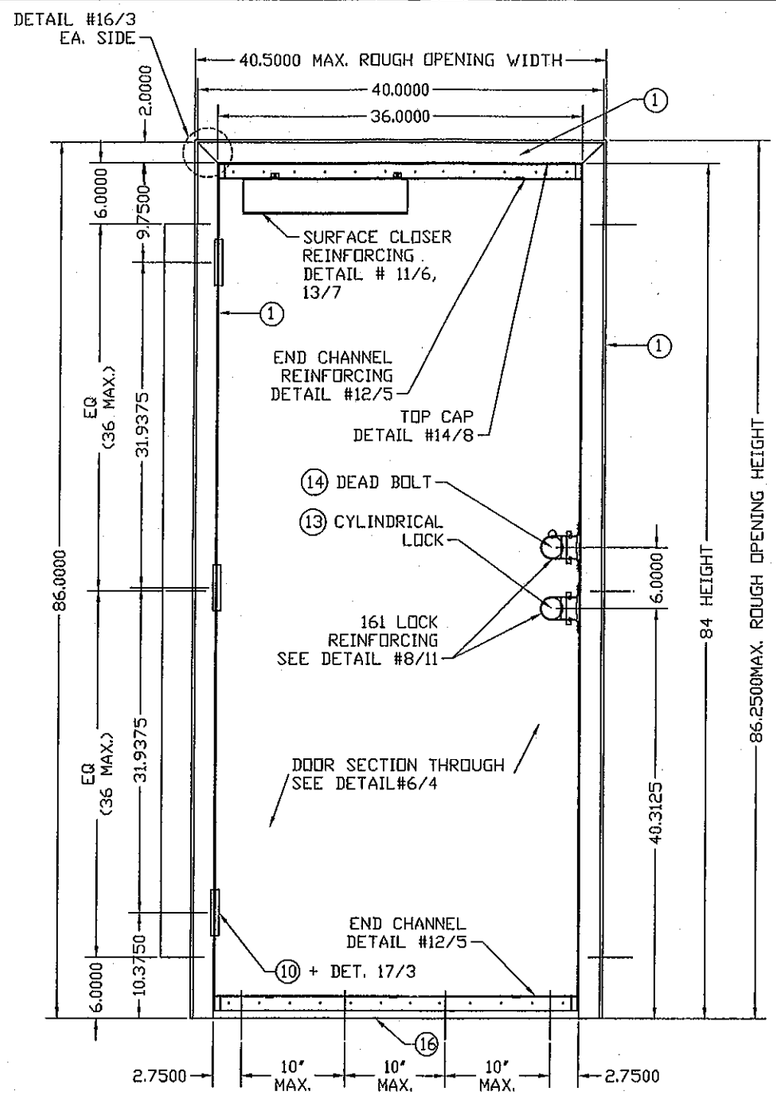

ASSEMBLY #2 ELEVATION SINGLE DOOR EXTERIOR VIEW (OUTSWING)
WALL CONDITION - WOOD STUD
ANCHOR: 2PC CLIP-IN DETAIL#20
CYLINDRICAL LOCK + DEAD BOLT

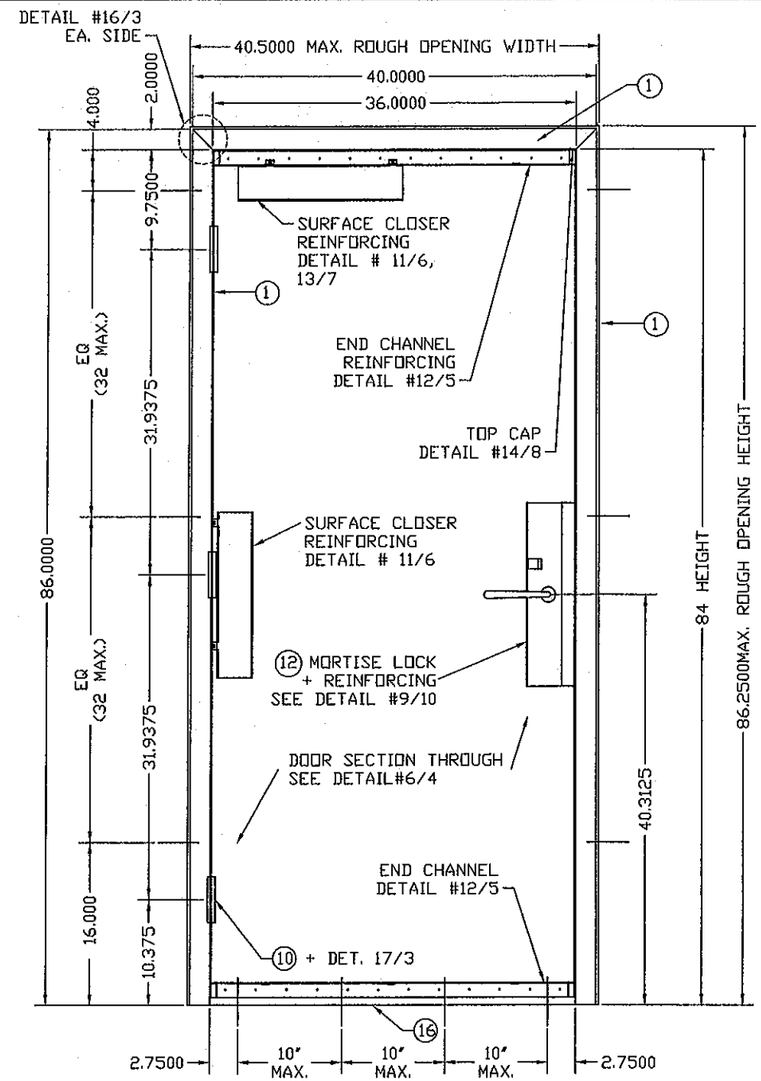

ASSEMBLY #3 ELEVATION SINGLE DOOR EXTERIOR VIEW (OUTSWING)
WALL CONDITION - MASONRY
ANCHOR: WIRE DETAIL #21
MORTISE LOCK.

WALTER A. TILLIT JR. LICENSE No. 44167 STATE OF FLORIDA PROFESSIONAL ENGINEER

PRODUCT REVISED
in complying with the Florida Building Code
Acceptance No. 12-0216.06
Expiration Date 4/10/13
By Ishaq I. Chanda
Board Code/Product Control

FLORIDA BUILDING CODE (HIGH VELOCITY HURRICANE ZONE)

© 2012 TILTECO INC. (ENGINEERING)

TILTECO INC.
TILLIT TESTING & ENGINEERING COMPANY
6355N.W. 36th. St., Ste. 305, VIRGINIA GARDENS, FL 33166
Phone : (305)871-1530 . Fax : (305)871-1531
e-mail: tilteco@aol.com
EB-0006719
WALTER A. TILLIT Jr. P.E.
FLORIDA Lic. # 44167

SERIES LS18 FLUSH OUTSWING COMMERCIAL STEEL DOOR W/SERIES "AS" STEEL FRAME

DAYBAR INDUSTRIES LTD
50 WEST DRIVE, BRAMPTON, ON CANADA, L6T 2J4
TEL: 905 625-8000 FAX: 905 625-4204

REV. No	DESCRIPTION	DATE	REV. No	DESCRIPTION	DATE
1	OLD 09-031	01/17/12	3		
2	–	–	4		

DRAWN BY: L.G./A.G.
01/17/12 DATE
12-011 DRAWING No
SHEET 1A OF 14

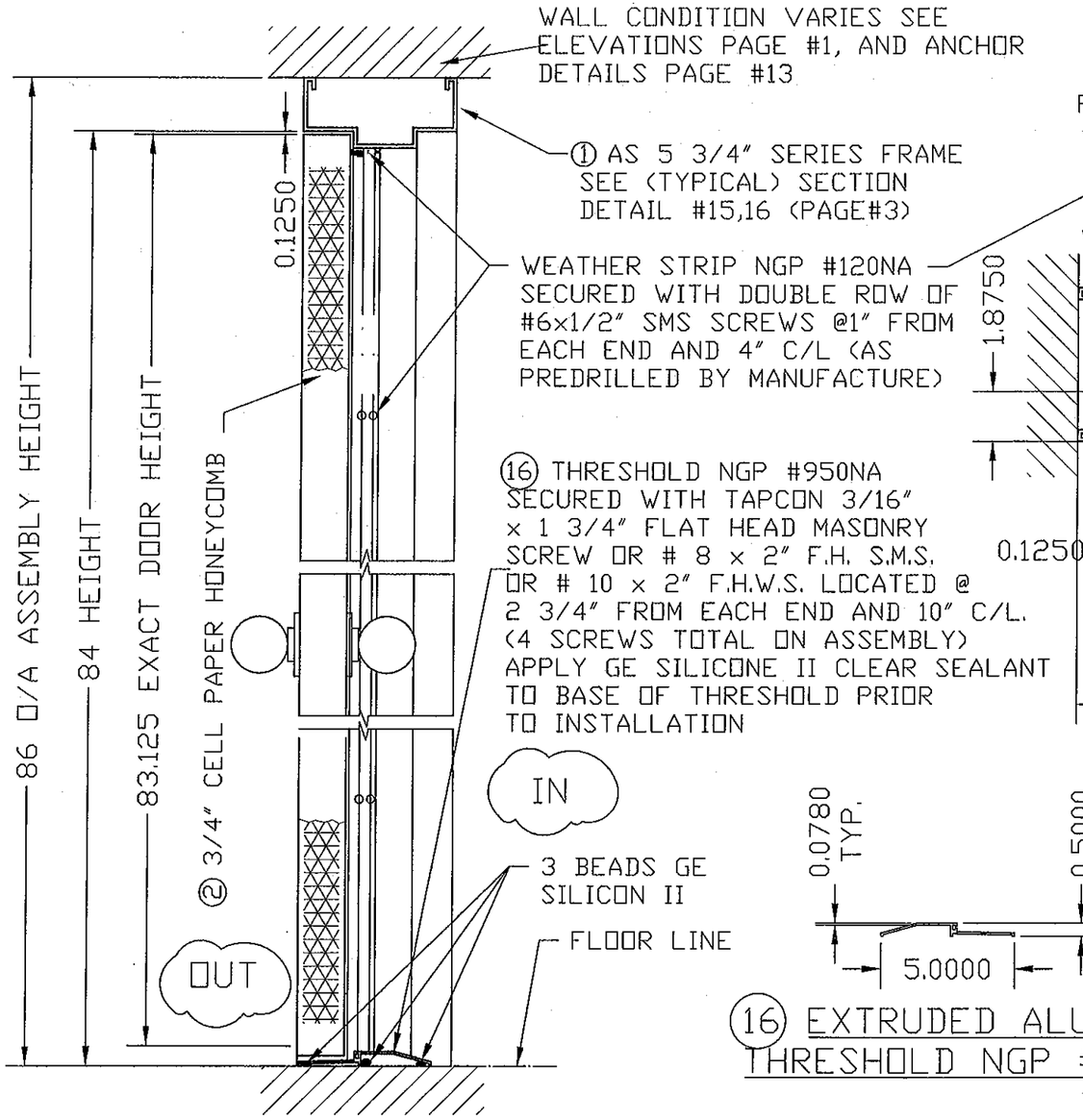

TYPICAL VERTICAL SECTION

⑯ EXTRUDED ALUMINUM THRESHOLD NGP #950NA

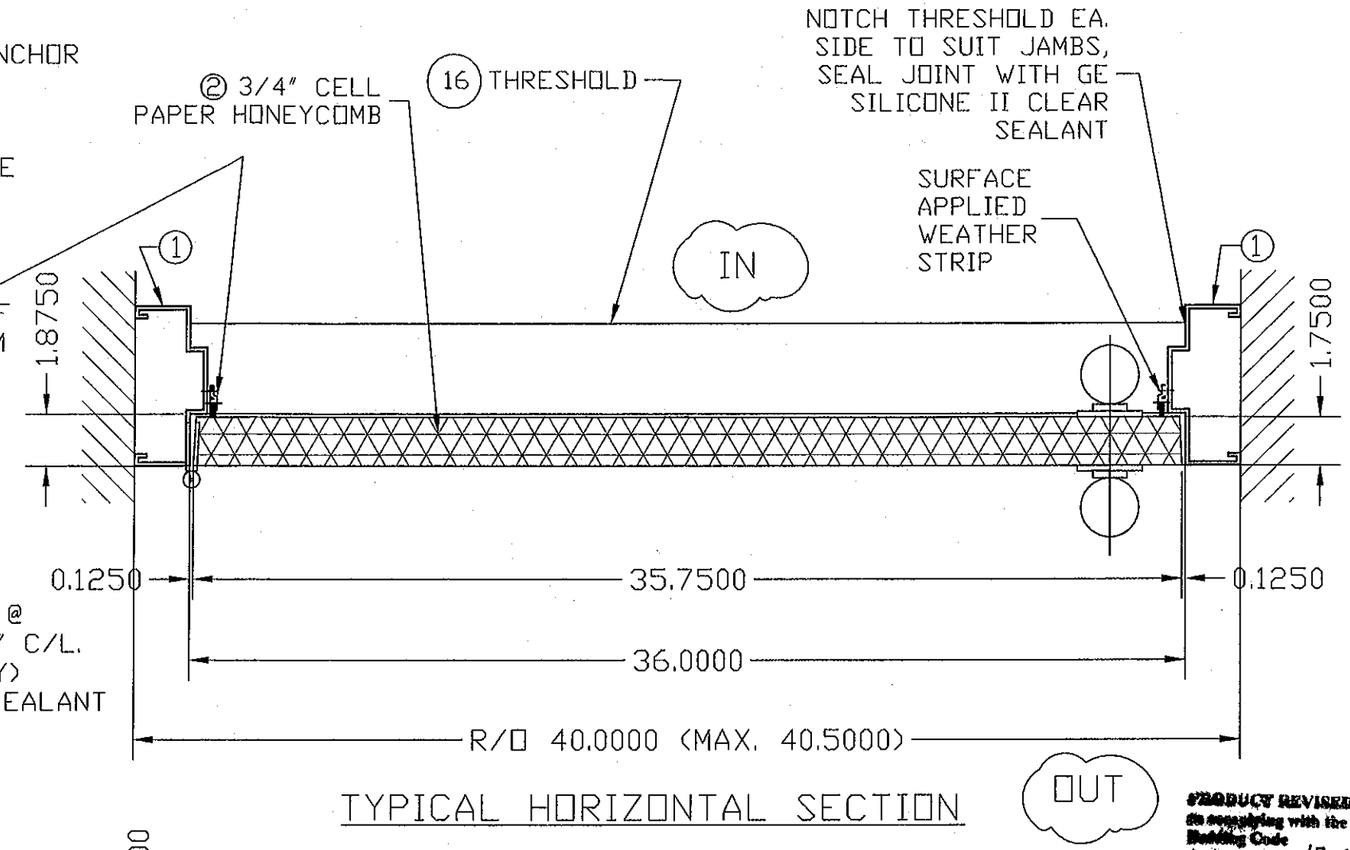

TYPICAL HORIZONTAL SECTION

DOOR MODEL: SERIES LS18 FLUSH OUTSWING COMMERCIAL STEEL W/ SERIES "AS" FRAME

MAX. SHIM SPACE IS 1/4" TYP.

PRODUCT REVISED
In complying with the Florida Building Code
Acceptance No 12-0216.06
Expiration Date 4/10/13
By Isaac I. Lhamb
Miami Dade Product Control

WALTER A. TILLIT JR. LICENSE No. 44167 STATE OF FLORIDA PROFESSIONAL ENGINEER

MATERIAL NOTE:

② DOOR 18 GAUGE .045 MINIMUM.
ALL STEEL COMPONENTS OF THIS ITEM, i.e., FACE SHEETS, INTERNAL COMPONENTS AND REINFORCEMENTS ARE MANUFACTURED FROM TENSION LEVELED STEEL CONFORMING TO ASTM A924, GALVANIZED TO ASTM A653/A653M, COMMERCIAL STEEL (TYPE B), COATING DESIGNATION A40, KNOWN COMMERCIALLY AS PAINTABLE GALVANNEAL: AVERAGE TENSILE STRENGTH: 52 KSI ;AVERAGE YIELD STRENGTH: 45 KSI, ELONGATION: 40%.

① FRAME 16 GAUGE .058 MINIMUM
ALL STEEL COMPONENTS OF THIS ITEM, i.e., HEAD, JAMBS, REINFORCEMENTS AND ANCHORS ARE MANUFACTURED FROM COMMERCIAL STEEL (TYPE B), GALVANIZED TO ASTM A653/A653M, COATING DESIGNATION A40, KNOWN COMMERCIALLY AS PAINTABLE GALVANNEAL: AVERAGE TENSILE STRENGTH, 52 KSI
AVERAGE YIELD STRENGTH, 45 KSI, ELONGATION: 40%.

FLORIDA BUILDING CODE (HIGH VELOCITY HURRICANE ZONE)

© 2012 TILTECO INC. (ENGINEERING)

TILTECO INC.
TILLIT TESTING & ENGINEERING COMPANY
6355N.W. 36th. St., Ste. 305, VIRGINIA GARDENS, Fl. 33166
Phone : (305)871-1530 . Fax : (305)871-1531
e-mail: tilteco@aol.com
EB-0006719
WALTER A. TILLIT Jr. P.E.
FLORIDA Lic. # 44167

SERIES LS18 FLUSH OUTSWING COMMERCIAL STEEL DOOR W/SERIES "AS" STEEL FRAME

DAYBAR INDUSTRIES LTD
50 WEST DRIVE, BRAMPTON, ON CANADA, L6T 2J4
TEL: 905 625-8000 FAX: 905 625-4204

REV. No	DESCRIPTION	DATE	REV. No	DESCRIPTION	DATE
1	OLD 09-031	01/17/12	3		
2	–	–	4		

DRAWN BY: L.G./A.G.
01/17/12 DATE
12-011 DRAWING No
SHEET 2 OF 14

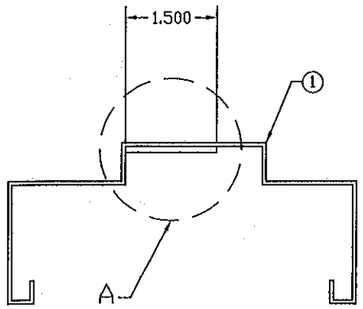

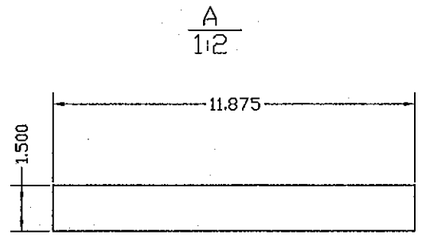

REINFORCING MATERIAL:
GAUGE 12 MINIMUM (0.097 THICK)
GALVANNEAL

SURFACE STRIKE REINFORCING DETAIL #19

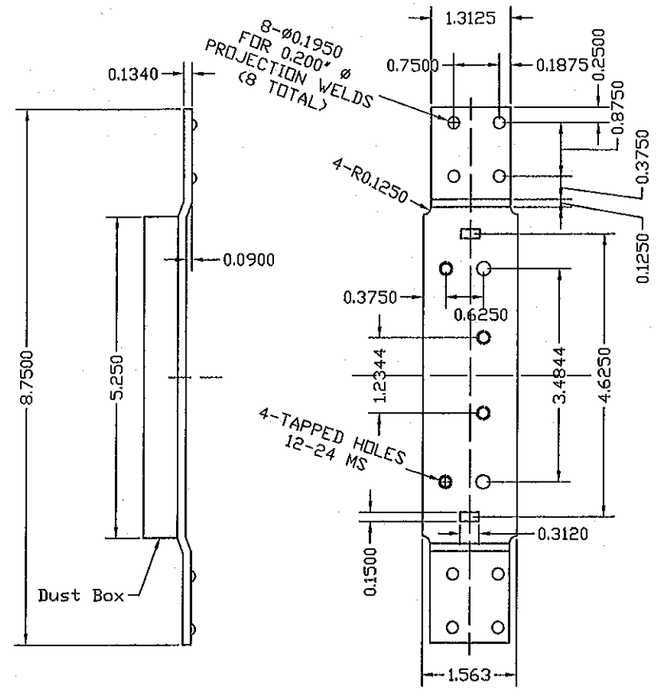

MATERIAL:
GAUGE 10 MINIMUM
GALVANNEAL

③ ④ 4 1/2" FRAME HINGE REINFORCING DETAIL #17

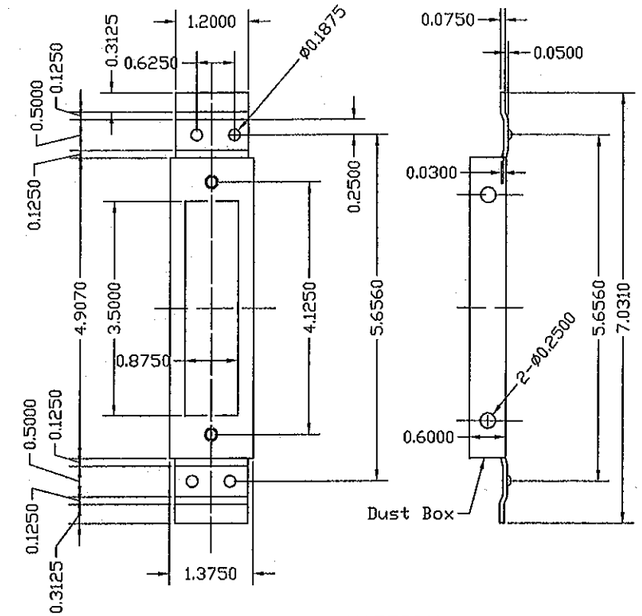

MATERIAL:
GAUGE 12 MINIMUM
GALVANNEAL

⑤ 4 7/8" STRIKE REINFORCEMENT FOR FRAME DETAIL #18

WALTER A. TILLIT JR.
LICENSE
No. 44167
STATE OF FLORIDA
PROFESSIONAL ENGINEER

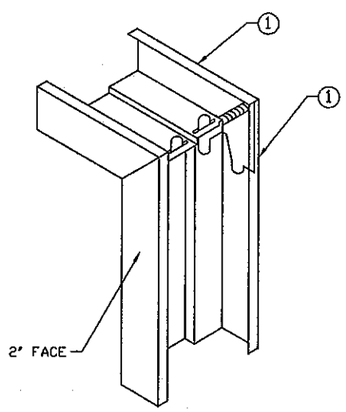

1. DIEMITERED CORNER CONT. WELDED INSIDE FACES & AT RETURNS
2. CAULK COMPLETE INSIDE CORNER WITH GE SILICONE II

TYPICAL WELDED CORNER DETAIL #16

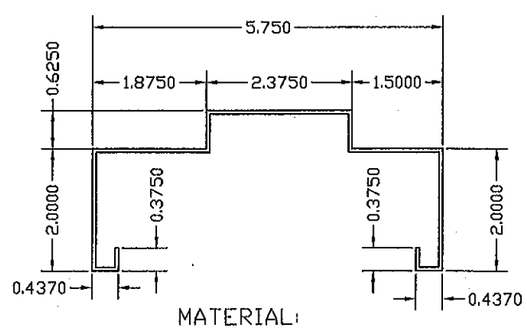

MATERIAL:
GAUGE 16 MINIMUM (.057)
GALVANNEAL

① AS 5 3/4" TYPICAL SECTION THROUGH DETAIL #15

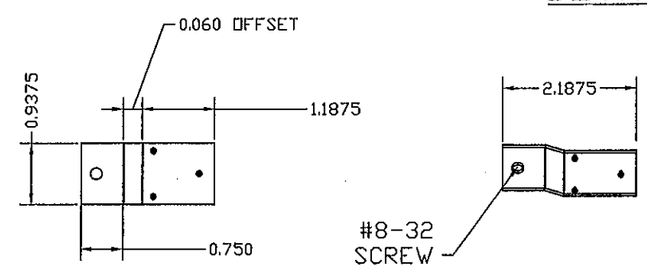

DEAD LOCK STRIKE TAB 14 GA (0.074) MIN

ATTACHED TO STRIKE JAMB W/ (3) 1/8"Ø PROJECTION WELDS.

PRODUCT REVISED
as complying with the Florida Building Code
Acceptance No 12-0216.06
Expiration Date 4/10/13
By [signature]
Miami Dade Product Control

FLORIDA BUILDING CODE (HIGH VELOCITY HURRICANE ZONE)

© 2012 TILTECO INC. (ENGINEERING)

TILTECO INC.
TILLIT TESTING & ENGINEERING COMPANY
6355N.W. 36th. St., Ste. 305, VIRGINIA GARDENS, Fl. 33166
Phone : (305)871-1530 . Fax : (305)871-1531
e-mail: tilteco@aol.com
EB-0006719
WALTER A. TILLIT Jr. P.E.
FLORIDA Lic. # 44167

SERIES LS18 FLUSH OUTSWING COMMERCIAL STEEL DOOR W/SERIES "AS" STEEL FRAME

DAYBAR INDUSTRIES LTD
50 WEST DRIVE, BRAMPTON,
ON CANADA, L6T 2J4
TEL: 905 625-8000 FAX: 905 625-4204

REV. No	DESCRIPTION	DATE	REV. No	DESCRIPTION	DATE
1	OLD 09-031	01/17/12	3		
2	–	–	4		

DRAWN BY: L.G./A.G.
01/17/12 DATE
12-011 DRAWING No
SHEET 3 OF 14

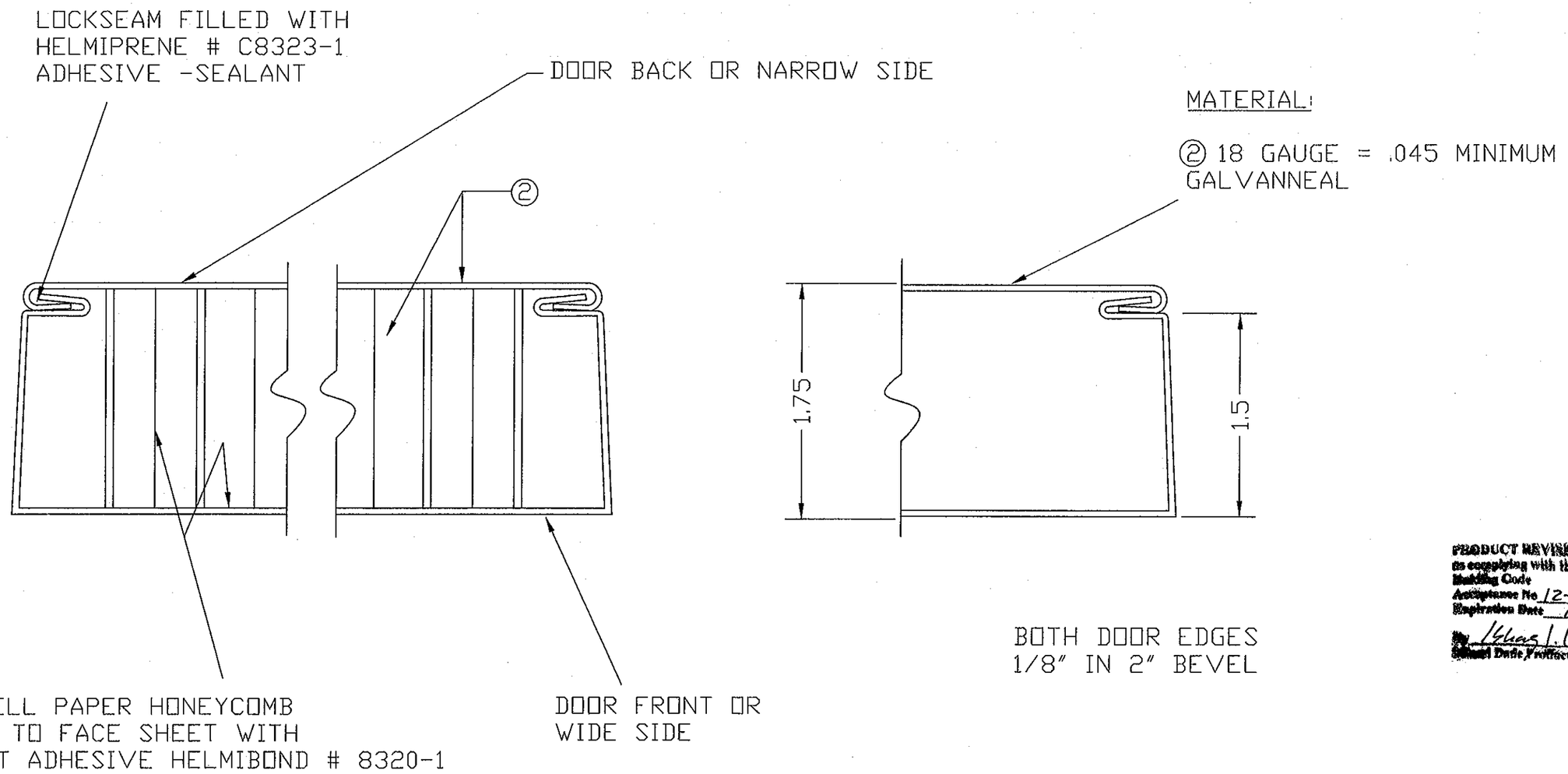

PRODUCT REVISED
as complying with the Florida
Building Code
Acceptance No 12-0216.06
Expiration Date 4/10/13
By [signature]
Signed Date Product Control

DOOR SECTION THROUGH EDGE SEAM, DETAIL #6

WALTER A. TILLIT JR.
LICENSE
No. 44167
STATE OF
FLORIDA
PROFESSIONAL ENGINEER

FLORIDA BUILDING CODE (HIGH VELOCITY HURRICANE ZONE)

© 2012 TILTECO INC. (ENGINEERING)

TILTECO INC.
TILLIT TESTING & ENGINEERING COMPANY
6355N.W. 36th. St., Ste. 305, VIRGINIA GARDENS, Fl. 33166
Phone : (305)871-1530 . Fax : (305)871-1531
e-mail: tilteco@aol.com
EB-0006719
WALTER A. TILLIT Jr. P.E.
FLORIDA Lic. # 44167

SERIES LS18 FLUSH OUTSWING COMMERCIAL STEEL DOOR W/SERIES "AS" STEEL FRAME

DAYBAR INDUSTRIES LTD
50 WEST DRIVE, BRAMPTON,
ON CANADA, L6T 2J4
TEL: 905 625-8000 FAX: 905 625-4204

REV. No	DESCRIPTION	DATE	REV. No	DESCRIPTION	DATE
1	OLD 09-031	01/17/12	3		
2	–	–	4		

DRAWN BY: L.G./A.G.
01/17/12 DATE
12-011 DRAWING No
SHEET 4 OF 14

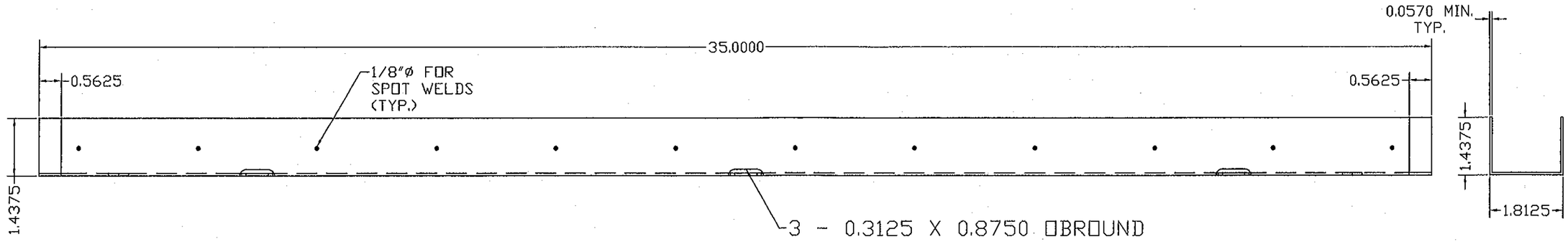

ELEVATION

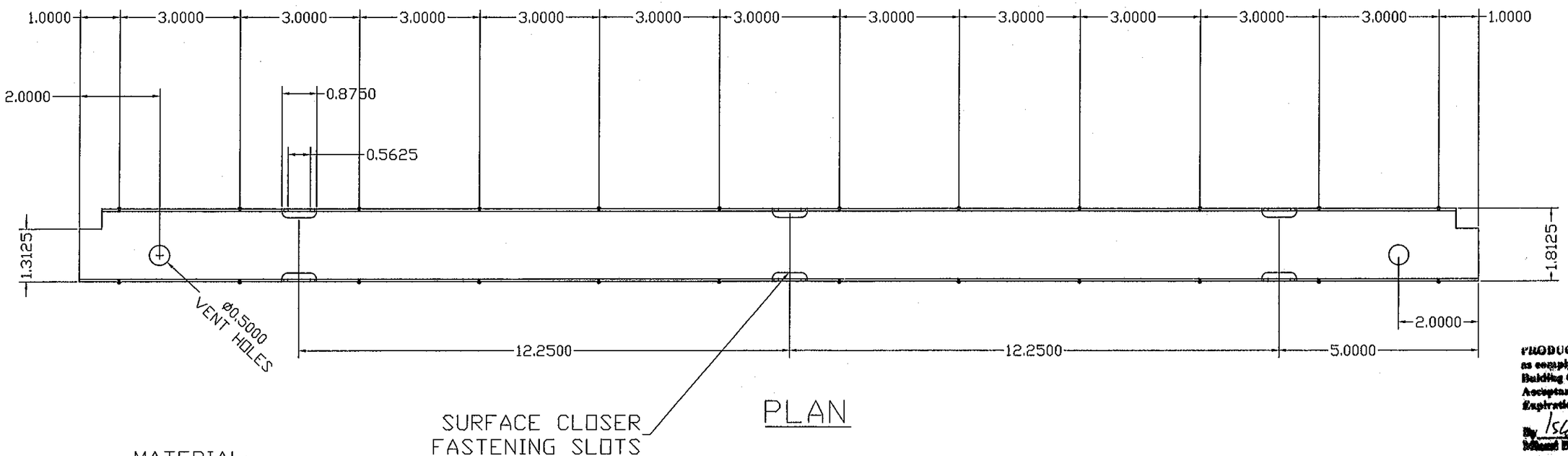

PLAN

PRODUCT REVISED
as complying with the Florida
Building Code
Acceptance No 12-0216.06
Expiration Date 4/10/13
By Ishwaj I. Chand
Miami Dade Product Control

MATERIAL:
16 GAUGE (0.057) MINIMUM
GALVANNEAL

WALTER A. TILLIT JR.
LICENSE
No. 44167
STATE OF FLORIDA
PROFESSIONAL ENGINEER

DOOR TOP AND BOTTOM TYPICAL END CHANNEL
DETAIL #12

FLORIDA BUILDING CODE (HIGH VELOCITY HURRICANE ZONE)

© 2012 TILTECO INC. (ENGINEERING)

TILTECO INC.
TILLIT TESTING & ENGINEERING COMPANY
6355N.W. 36th. St., Ste. 305, VIRGINIA GARDENS, FL 33166
Phone : (305)871-1530 . Fax : (305)871-1531
e-mail: tilteco@aol.com
EB-0006719
WALTER A. TILLIT Jr. P.E.
FLORIDA Lic. # 44167

SERIES LS18 FLUSH OUTSWING COMMERCIAL STEEL DOOR W/SERIES "AS" STEEL FRAME

DAYBAR INDUSTRIES LTD
50 WEST DRIVE, BRAMPTON,
ON CANADA, L6T 2J4
TEL: 905 625-8000 FAX: 905 625-4204

REV. No	DESCRIPTION	DATE	REV. No	DESCRIPTION	DATE
1	OLD 09-031	01/17/12	3		
2	–	–	4		

DRAWN BY: L.G./A.G.
01/17/12 DATE
12-011 DRAWING No
SHEET 5 OF 14

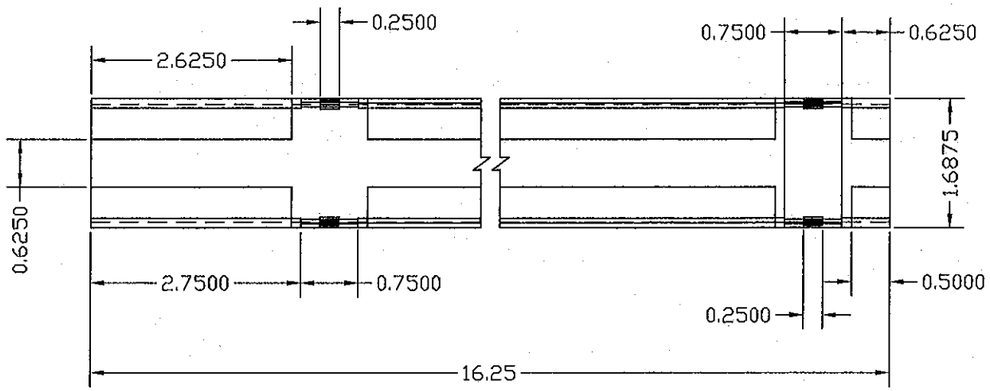

PLAN

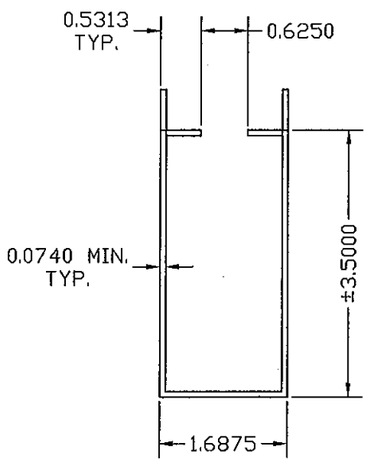

SECTION

MATERIAL:
14 GAUGE (0.074)
MINIMUM GALVANNEAL

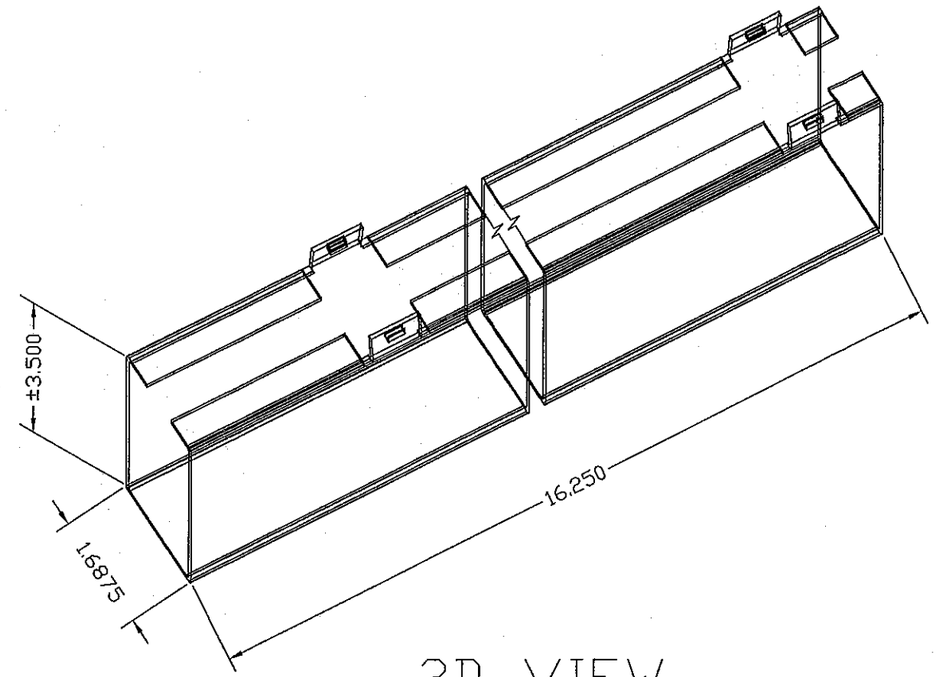

3D VIEW

PRODUCT REVISED
as complying with the Florida
Building Code
Acceptance No 12-0216.06
Expiration Date 4/10/13
By [illegible]
Miami Dade Product Control

DOOR SURFACE CLOSER REINFORCING

DETAIL #11

WALTER A. TILLIT JR.
LICENSE
No. 44167
STATE OF FLORIDA
PROFESSIONAL ENGINEER

FLORIDA BUILDING CODE (HIGH VELOCITY HURRICANE ZONE)

© 2012 TILTECO INC. (ENGINEERING)

TILTECO INC.
TILLIT TESTING & ENGINEERING COMPANY
6355N.W. 36th. St., Ste. 305, VIRGINIA GARDENS, Fl. 33166
Phone : (305)871-1530 . Fax : (305)871-1531
e-mail: tilteco@aol.com
EB-0006719
WALTER A. TILLIT Jr. P.E.
FLORIDA Lic. # 44167

SERIES LS18 FLUSH OUTSWING COMMERCIAL STEEL DOOR W/SERIES "AS" STEEL FRAME

DAYBAR INDUSTRIES LTD
50 WEST DRIVE, BRAMPTON,
ON CANADA, L6T 2J4
TEL: 905 625-8000 FAX: 905 625-4204

REV. No	DESCRIPTION	DATE	REV. No	DESCRIPTION	DATE
1	OLD 09-031	01/17/12	3		
2	--	--	4		

DRAWN BY: L.G./A.G.
01/17/12 DATE
12-011 DRAWING No
SHEET 6 OF 14

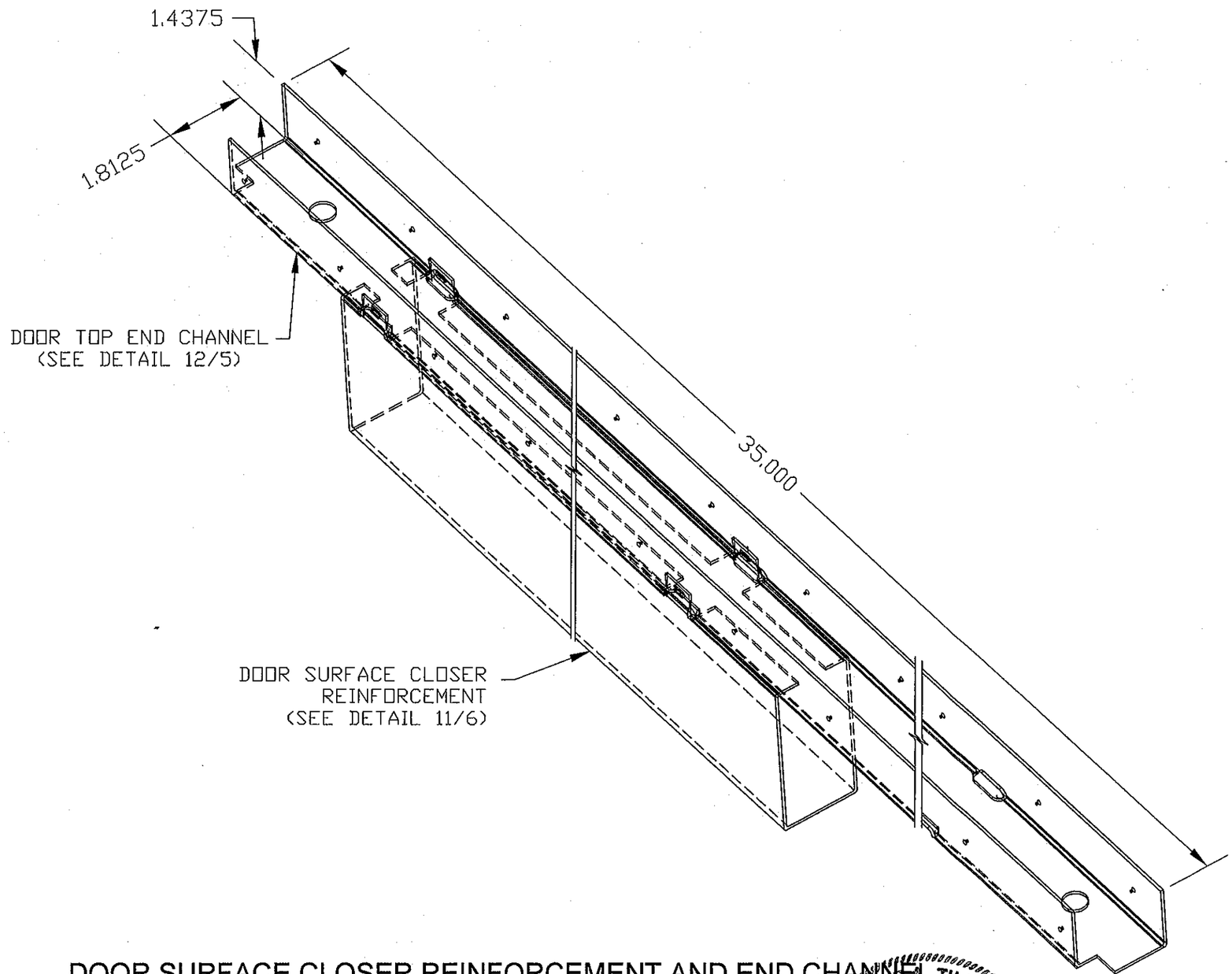

PRODUCT REVISED
as complying with the Florida
Building Code
Acceptance No 12-0216.06
Expiration Date 4/10/13
By Ishaq I. Ahmed
Miami Dade Product Control

DOOR SURFACE CLOSER REINFORCEMENT AND END CHANNEL ASSEMBLY DETAIL #13

WALTER A. TILLIT JR.
LICENSE
No. 44167
STATE OF FLORIDA
PROFESSIONAL ENGINEER

FLORIDA BUILDING CODE (HIGH VELOCITY HURRICANE ZONE)

© 2012 TILTECO INC. (ENGINEERING)

TILTECO INC.
TILLIT TESTING & ENGINEERING COMPANY
6355N.W. 36th. St., Ste. 305, VIRGINIA GARDENS, Fl. 33166
Phone : (305)871-1530 . Fax : (305)871-1531
e-mail: tilteco@aol.com
EB-0006719
WALTER A. TILLIT Jr. P.E.
FLORIDA Lic. # 44167

SERIES LS18 FLUSH OUTSWING COMMERCIAL STEEL DOOR W/SERIES "AS" STEEL FRAME

DAYBAR INDUSTRIES LTD
50 WEST DRIVE, BRAMPTON,
ON CANADA, L6T 2J4
TEL: 905 625-8000 FAX: 905 625-4204

REV. No	DESCRIPTION	DATE	REV. No	DESCRIPTION	DATE
1	OLD 09-031	01/17/12	3		
2	–	–	4		

DRAWN BY: L.G./A.G.
01/17/12 DATE
12-011 DRAWING No
SHEET 7 OF 14

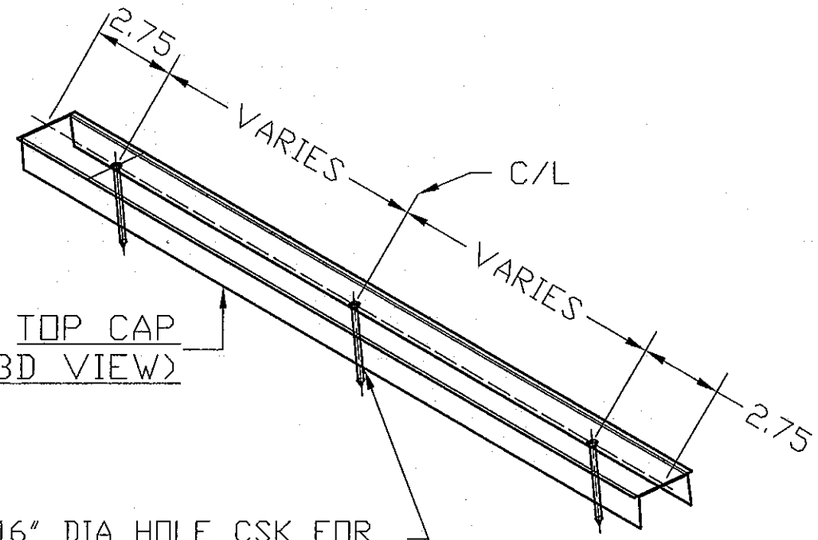

TOP CAP
(3D VIEW)

NOTE:
MATERIAL 20 GAUGE
(0.035) MINIMUM
GALVANNEAL

INSTALLATION:
APPLY BEAD OF GE SILICONE II SEALANT
TO INSIDE-TOP EDGE OF DOOR.
PRESS FIT TOP CAP INTO DOOR
TOP CHANNEL & SCREW FASTEN

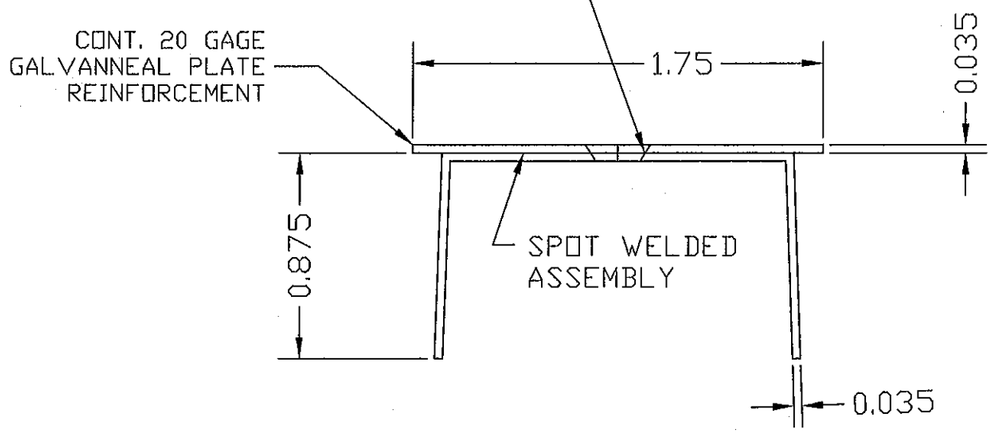

TOP CAP (SECTION)

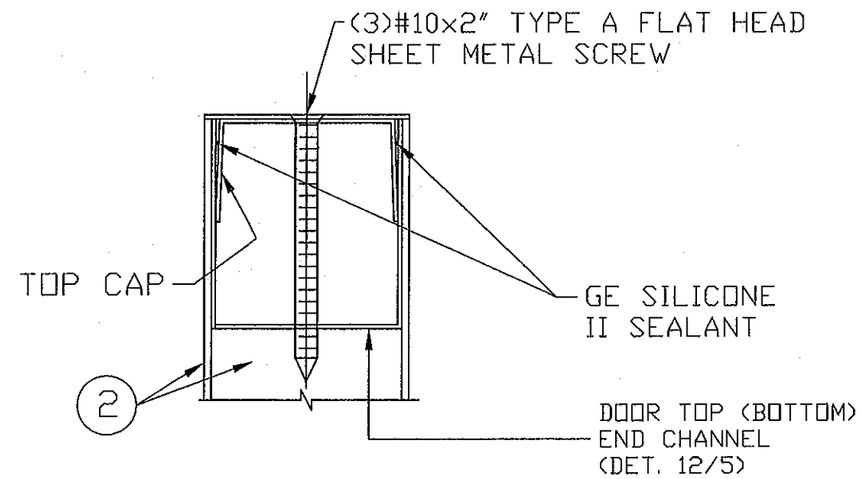

DOOR ASSEMBLY
AT TOP EDGE

PRODUCT REVISED
as complying with the Florida Building Code
Acceptance No 12-0216.01
Expiration Date 4/10/13
By Ishaq I. Chanda
Miami Dade Product Control

PAGE #8 DOOR STEEL TOP CAP
DETAIL #14

WALTER A. TILLIT JR.
LICENSE
No. 44167
STATE OF FLORIDA
PROFESSIONAL ENGINEER

FLORIDA BUILDING CODE (HIGH VELOCITY HURRICANE ZONE)

© 2012 TILTECO INC. (ENGINEERING)

TILTECO INC.
TILLIT TESTING & ENGINEERING COMPANY
6355N.W. 36th. St., Ste. 305, VIRGINIA GARDENS, FL 33166
Phone : (305)871-1530 . Fax : (305)871-1531
e-mail: tilteco@aol.com
EB-0006719
WALTER A. TILLIT Jr. P.E.
FLORIDA Lic. # 44167

SERIES LS18 FLUSH OUTSWING COMMERCIAL STEEL DOOR W/SERIES "AS" STEEL FRAME

DAYBAR INDUSTRIES LTD
50 WEST DRIVE, BRAMPTON,
ON CANADA, L6T 2J4
TEL: 905 625-8000 FAX: 905 625-4204

REV. No	DESCRIPTION	DATE	REV. No	DESCRIPTION	DATE
1	OLD 09-031	01/17/12	3		
2	–	–	4		

DRAWN BY: L.G./A.G.
01/17/12 DATE
12-011 DRAWING No
SHEET 8 OF 14

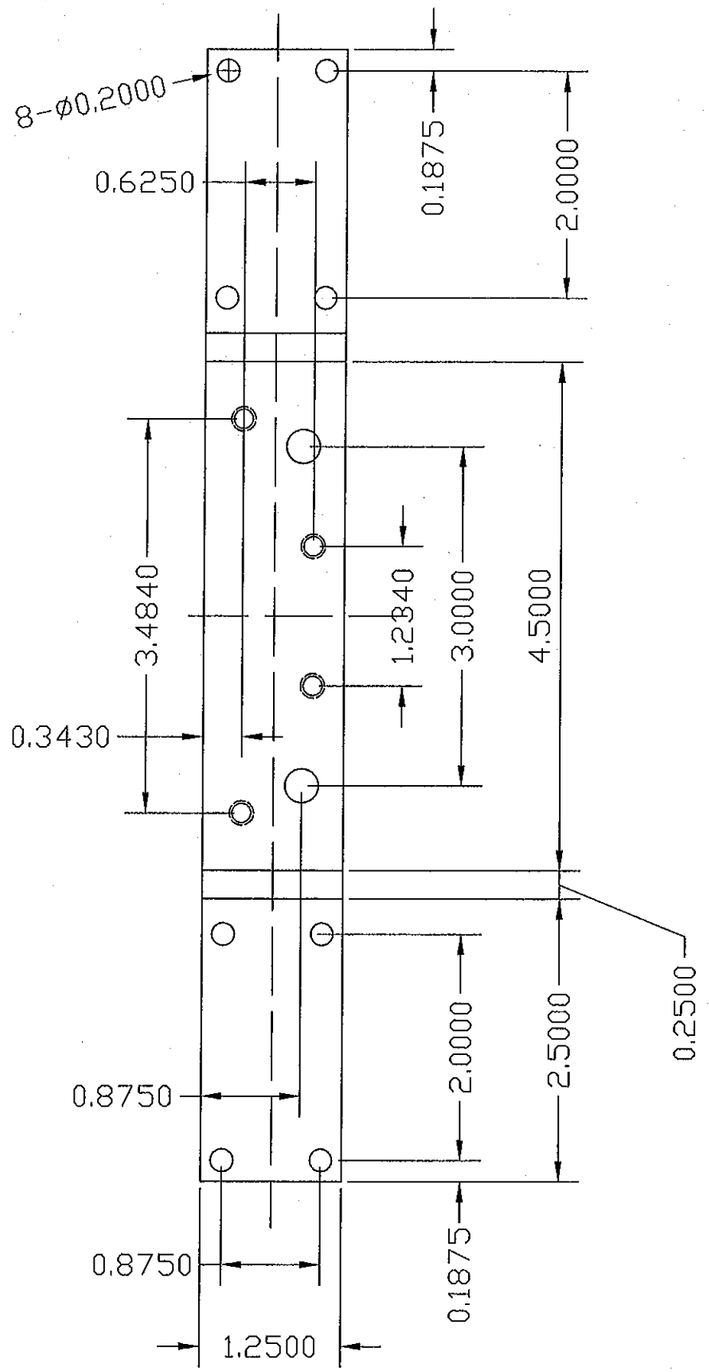

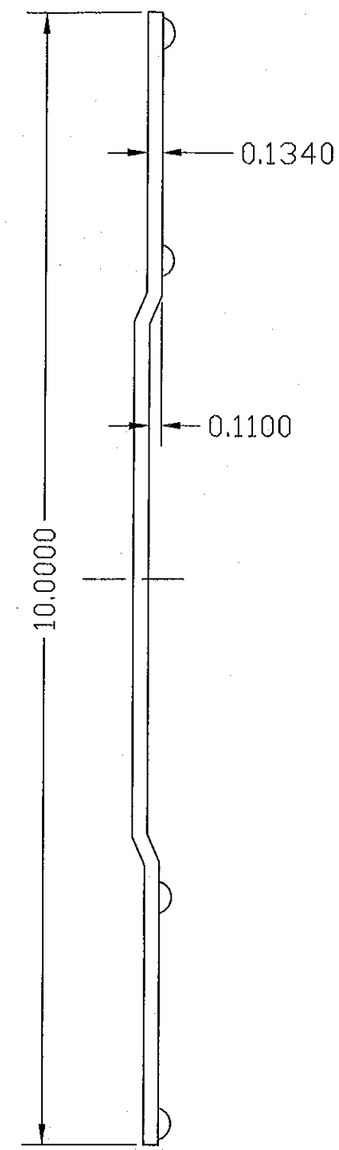

MATERIAL:
GAUGE 10 MINIMUM
GALVANNEAL

PRODUCT REVISED
as complying with the Florida
Building Code
Acceptance No 12-0216.06
Expiration Date 4/10/13
By Ishwar J. Chand
Miami Dade Product Control

DOOR HINGE REINFORCING.

WALTER A. TILLIT JR.
LICENSE
No. 44167
STATE OF FLORIDA
PROFESSIONAL ENGINEER

FLORIDA BUILDING CODE (HIGH VELOCITY HURRICANE ZONE)

© 2012 TILTECO INC. (ENGINEERING)

TILTECO INC.
TILLIT TESTING & ENGINEERING COMPANY
6355N.W. 36th. St., Ste. J05, VIRGINIA GARDENS, Fl. 33166
Phone : (305)871-1530 . Fax : (305)871-1531
e-mail: tilteco@aol.com
EB-0006719
WALTER A. TILLIT Jr. P.E.
FLORIDA Lic. # 44167

SERIES LS18 FLUSH OUTSWING COMMERCIAL STEEL DOOR W/SERIES "AS" STEEL FRAME

DAYBAR INDUSTRIES LTD
50 WEST DRIVE, BRAMPTON,
ON CANADA, L6T 2J4
TEL: 905 625-8000 FAX: 905 625-4204

REV. No	DESCRIPTION	DATE	REV. No	DESCRIPTION	DATE
1	OLD 09-031	01/17/12	3		
2	–	–	4		

DRAWN BY: L.G./A.G.

01/17/12
DATE

12-011
DRAWING No

SHEET 9 OF 14

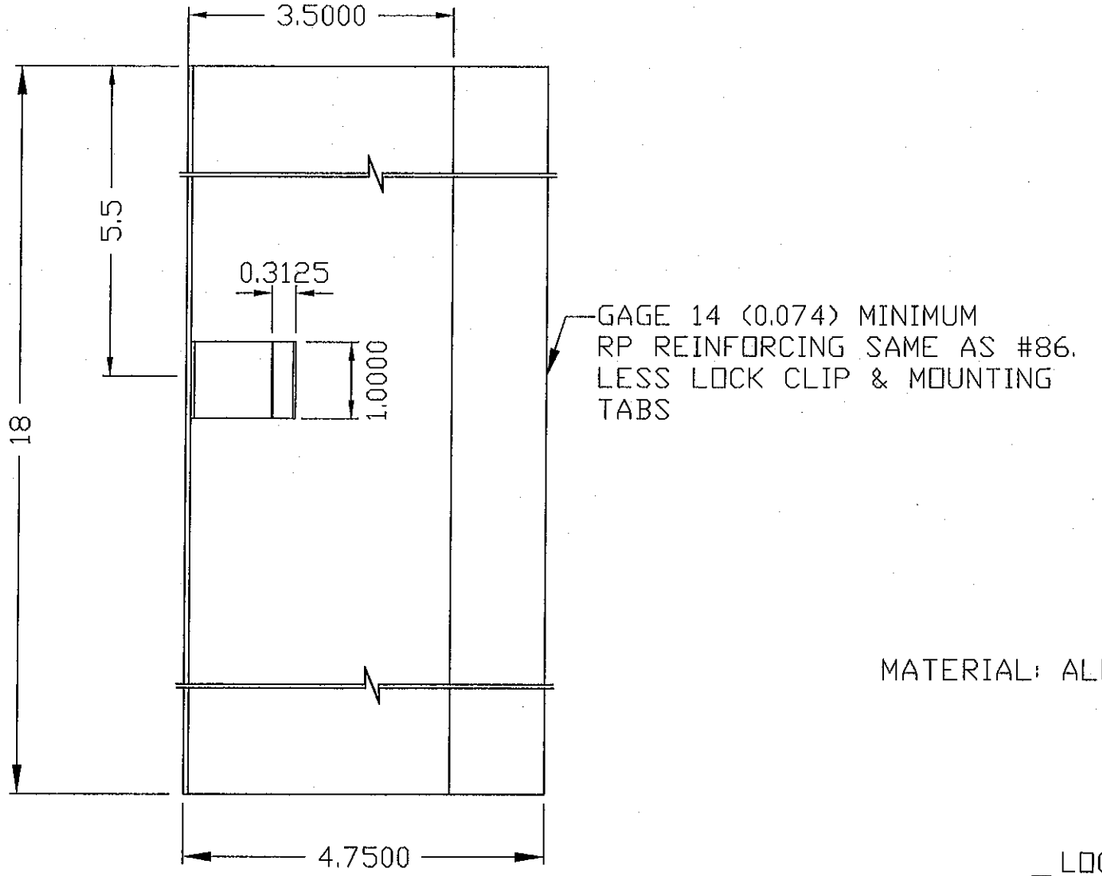

ELEVATION

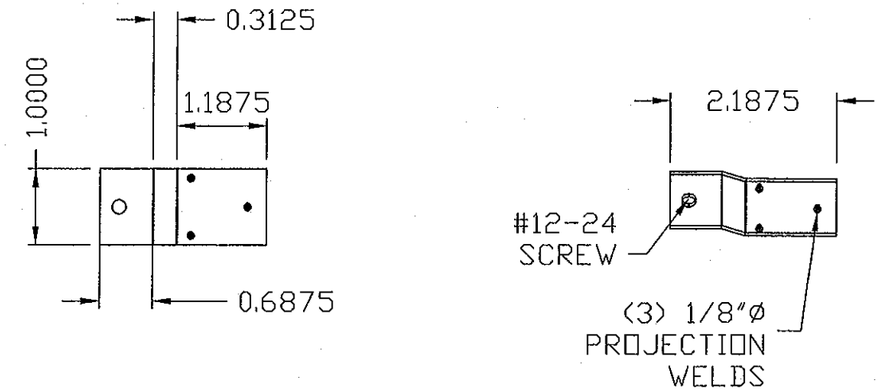

DOOR EDGE MOUNTING TAB
14 GA (0.074) MIN

MATERIAL: ALL GALVANNEAL

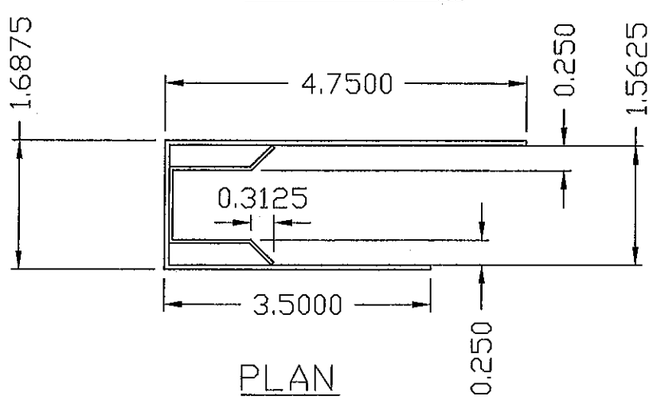

PLAN

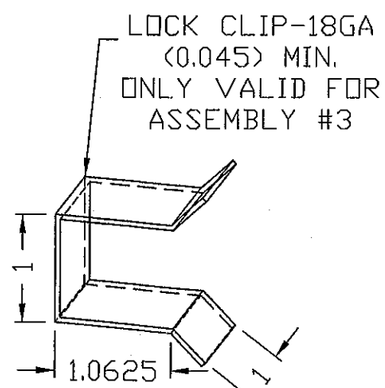

PRODUCT REVISED
as complying with the Florida
Building Code
Acceptance No. 12-0216.06
Expiration Date 4/10/13
By Ishag I. Chang
Miami Dade/Product Control

WALTER A. TILLIT JR.
LICENSE
No. 44167
STATE OF FLORIDA
PROFESSIONAL ENGINEER

ANSI #A115.1 #86 MORTISE LOCK,RP REINFORCINGS
DETAIL #9

FLORIDA BUILDING CODE (HIGH VELOCITY HURRICANE ZONE)

© 2012 TILTECO INC. (ENGINEERING)

TILTECO INC.
TILLIT TESTING & ENGINEERING COMPANY
6355N.W. 36th. St., Ste. 305, VIRGINIA GARDENS, FL 33166
Phone : (305)871-1530 . Fax : (305)871-1531
e-mail: tilteco@aol.com
EB-0006719
WALTER A. TILLIT Jr. P.E.
FLORIDA Lic. # 44167

SERIES LS18 FLUSH OUTSWING COMMERCIAL STEEL DOOR W/SERIES "AS" STEEL FRAME

DAYBAR INDUSTRIES LTD
50 WEST DRIVE, BRAMPTON,
ON CANADA, L6T 2J4
TEL: 905 625-8000 FAX: 905 625-4204

REV. No	DESCRIPTION	DATE	REV. No	DESCRIPTION	DATE
1	OLD 09-031	01/17/12	3		
2	–	–	4		

DRAWN BY: L.G./A.G.
01/17/12 DATE
12-011 DRAWING No
SHEET 10 OF 14

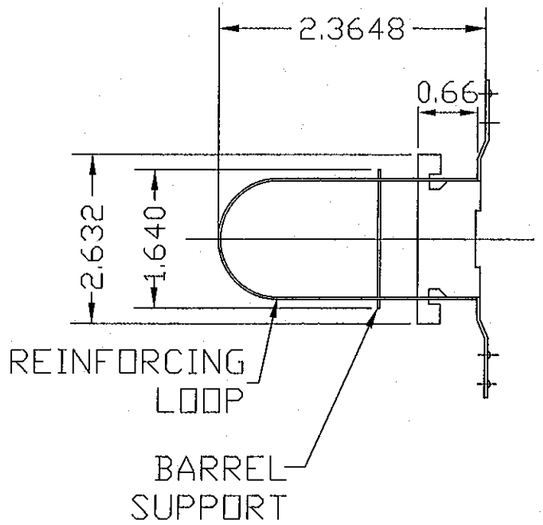

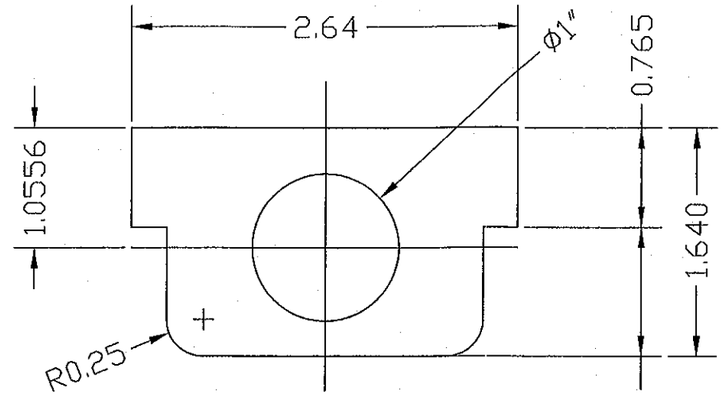

BARREL SUPPORT
MAT: 0.035 SATINCOAT

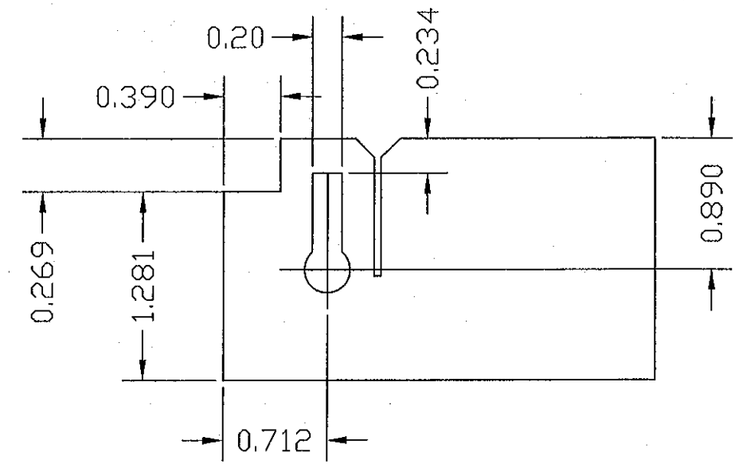

REINFORCING LOOP
MAT: .035 SATINCOAT

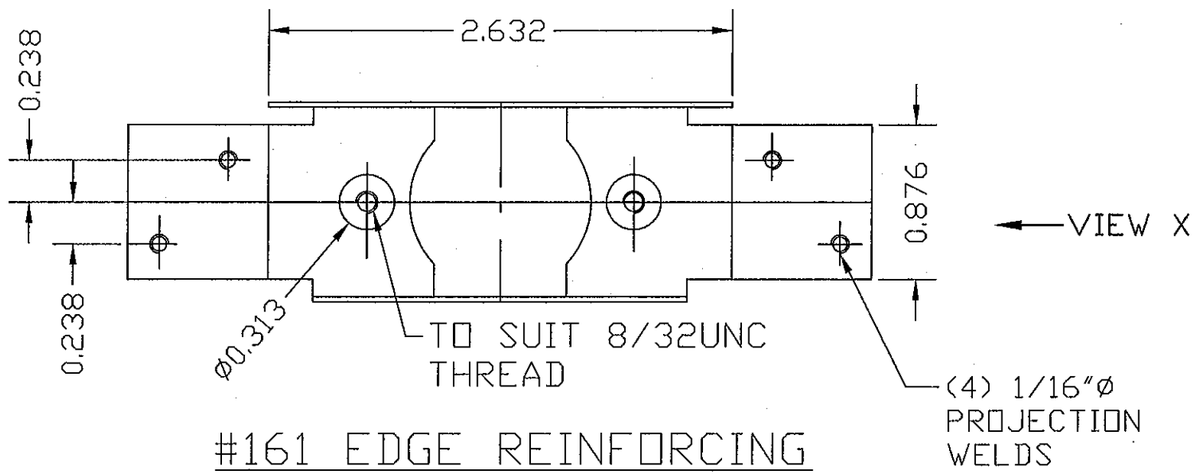

#161 EDGE REINFORCING
MAT: 0.078 SATINCOAT

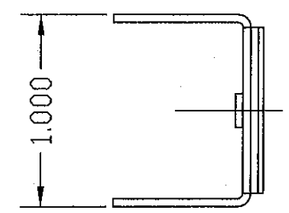

VIEW X

PRODUCT REVISED
as complying with the Florida
Building Code
Acceptance No 12-0216.06
Expiration Date 4/10/13
By Ishwaj J. Chauda
Miami Dade Product Control

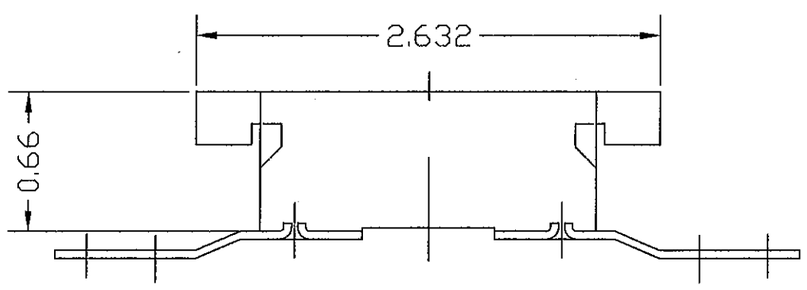

SECTION THROUGH
EDGE REINFORCING

#161 LOCK, REINFORCINGS
DETAIL #8

WALTER A. TILLIT JR.
LICENSE
No. 44167
STATE OF FLORIDA
PROFESSIONAL ENGINEER

FLORIDA BUILDING CODE (HIGH VELOCITY HURRICANE ZONE)

© 2012 TILTECO INC. (ENGINEERING)

TILTECO INC.
TILLIT TESTING & ENGINEERING COMPANY
6355N.W. 36th. St., Ste. 305, VIRGINIA GARDENS, Fl. 33166
Phone : (305)871-1530 . Fax : (305)871-1531
e-mail: tilteco@aol.com
EB-0006719
WALTER A. TILLIT Jr. P.E.
FLORIDA Lic. # 44167

SERIES LS18 FLUSH OUTSWING COMMERCIAL STEEL DOOR W/SERIES "AS" STEEL FRAME

DAYBAR INDUSTRIES LTD
50 WEST DRIVE, BRAMPTON,
ON CANADA, L6T 2J4
TEL: 905 625-8000 FAX: 905 625-4204

REV. No	DESCRIPTION	DATE	REV. No	DESCRIPTION	DATE
1	OLD 09-031	01/17/12	3		
2	–	–	4		

DRAWN BY: L.G./A.G.
01/17/12 DATE
12-011 DRAWING No
SHEET 11 OF 14

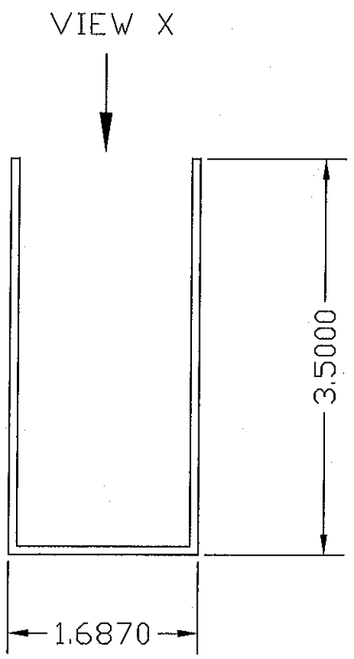

PLAN

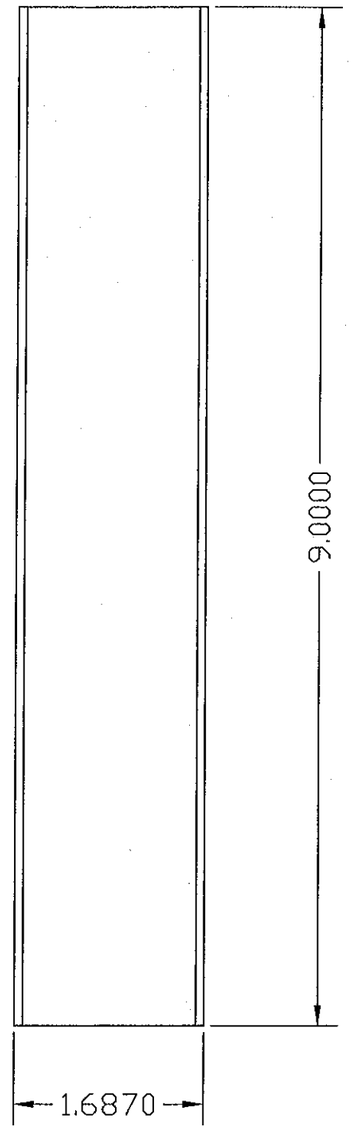

VIEW X

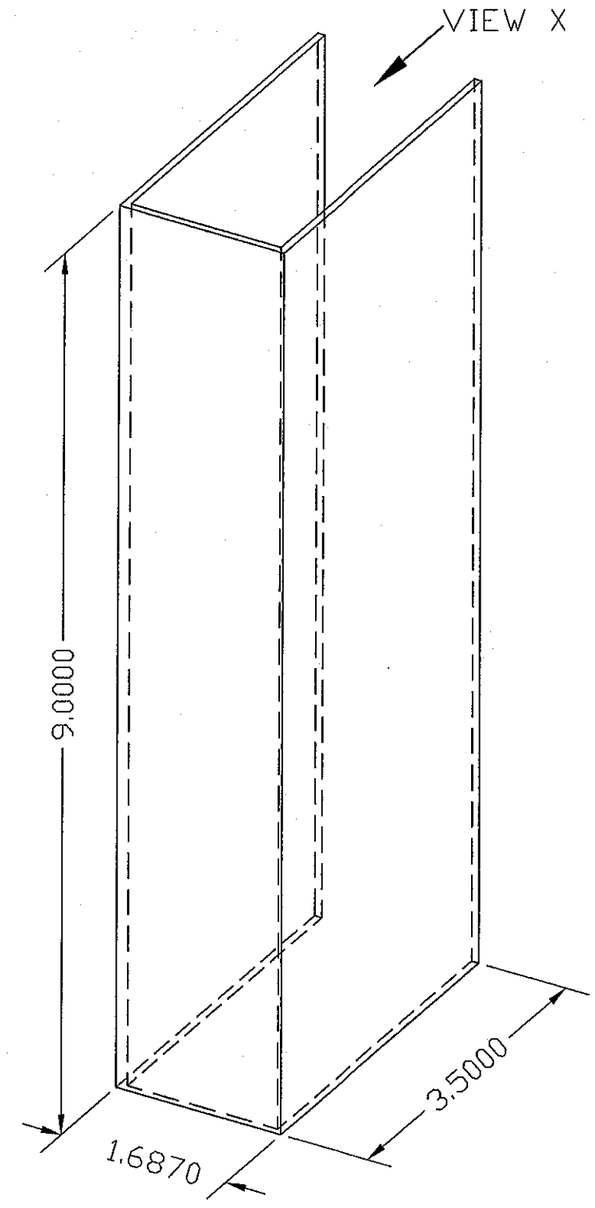

3D VIEW

MATERIAL:
14 GAUGE (0.074) MINIMUM GALVANNEAL, GLUED TO DOOR AT HEAD & SILL USING HEMILBOND 8320-1 CONTACT ADHESIVE.

PRODUCT REVISED
as complying with the Florida Building Code
Acceptance No 12-0216.06
Expiration Date 4/10/13
By [signature]
Miami Dade Product Control

PAGE #12 RIM PANIC SURFACE BOLT REINFORCINGS
DETAIL #10

WALTER A. TILLIT JR. LICENSE No. 44167 STATE OF FLORIDA PROFESSIONAL ENGINEER

FLORIDA BUILDING CODE (HIGH VELOCITY HURRICANE ZONE)

© 2012 TILTECO INC. (ENGINEERING)

TILTECO INC.
TILLIT TESTING & ENGINEERING COMPANY
6355N.W. 36th. St., Ste. 305, VIRGINIA GARDENS, FL 33166
Phone : (305)871-1530 , Fax : (305)871-1531
e-mail: tilteco@aol.com
EB-0006719
WALTER A. TILLIT Jr. P.E.
FLORIDA Lic. # 44167

SERIES LS18 FLUSH OUTSWING COMMERCIAL STEEL DOOR W/SERIES "AS" STEEL FRAME

DAYBAR INDUSTRIES LTD
50 WEST DRIVE, BRAMPTON, ON CANADA, L6T 2J4
TEL: 905 625-8000 FAX: 905 625-4204

REV. No	DESCRIPTION	DATE	REV. No	DESCRIPTION	DATE
1	OLD 09-031	01/17/12	3		
2	–	–	4		

DRAWN BY: L.G./A.G.
01/17/12 DATE
12-011 DRAWING No
SHEET 12 OF 14

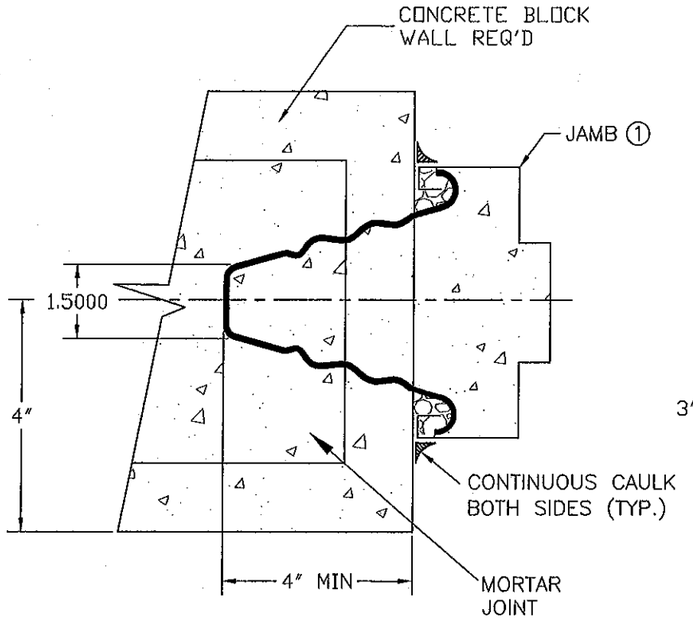

⑥ MASONRY WIRE ANCHORS (0.157" DIA, 9 1/2" LONG) IN HORIZ. MORTAR JOINTS; FILL JAMBS ① SOLID WITH MORTAR "DAYBAR # PT1-001"

WIRE ANCHOR DETAIL #21

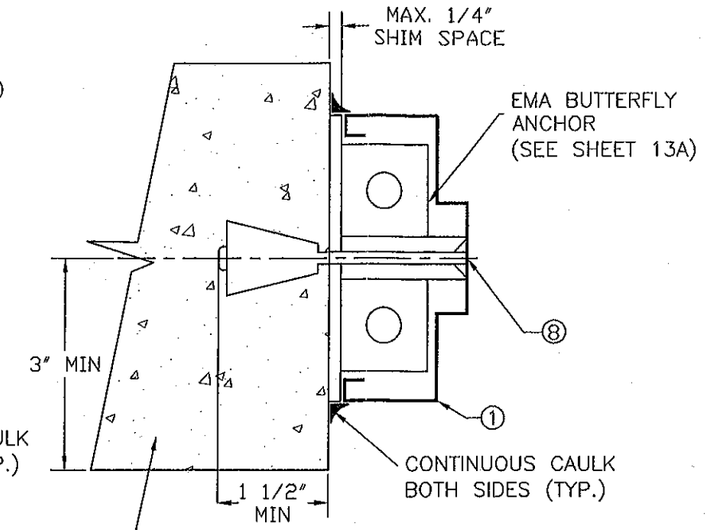

POURED CONCRETE OR GROUTED CONCRETE BLOCK WALL REQ'D. W/ ⑧ 3/8" x 5" FLAT HEAD STEEL UCAN-SLEEVE ANCHOR W/ 1 1/2" Min. EMBEDMENT.

(E.M.A.) EXISTING MASONRY ANCHOR DETAIL #22

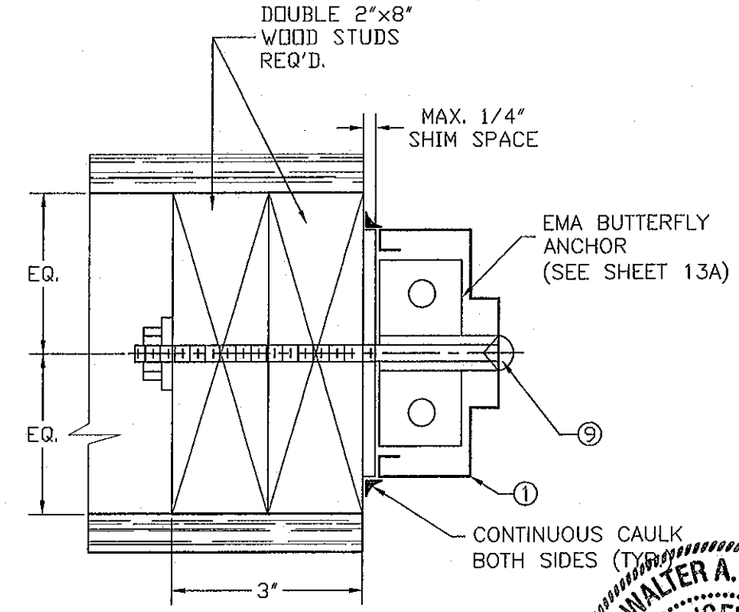

WOOD BUCK
(MIN. 2"x 8" NOMINAL)
(8) 3/8"-16 X 6" STEEL CARRIAGE BOLT C/W NUT AND WASHER

(E.M.A.) EXISTING WOOD BUCK ANCHOR OPTION FOR DETAIL #22

WALTER A. TILLIT JR. LICENSE No. 44167 STATE OF FLORIDA PROFESSIONAL ENGINEER

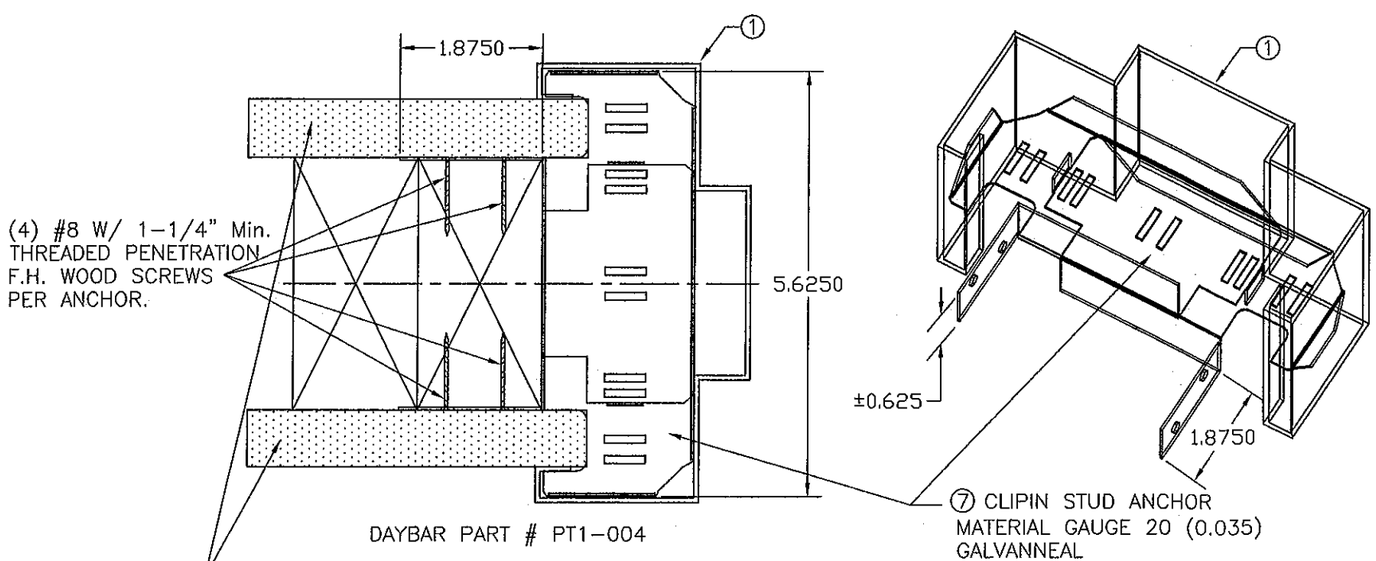

⑦ 2 PIECE COMBINATION STUD ANCHOR DETAIL #20

NOTES:

3 ANCHORS REQUIRED PER JAMB, 6 PER FRAME FOR DETAILS #20 & 21.
4 ANCHORS REQUIRED PER JAMB, 8 PER FRAME FOR DETAIL #22.

PRODUCT REVISED
in complying with the Florida Building Code
Acceptance No. 12-0216.06
Expiration Date 4/10/13
By Miami Dade Product Control

FLORIDA BUILDING CODE (HIGH VELOCITY HURRICANE ZONE)

© 2012 TILTECO INC. (ENGINEERING)

TILTECO INC.
TILLIT TESTING & ENGINEERING COMPANY
6355N.W. 36th. St., Ste. 305, VIRGINIA GARDENS, Fl. 33166
Phone : (305)871-1530 . Fax : (305)871-1531
e-mail: tilteco@aol.com
EB-0006719
WALTER A. TILLIT Jr. P.E.
FLORIDA Lic. # 44167

SERIES LS18 FLUSH OUTSWING COMMERCIAL STEEL DOOR W/SERIES "AS" STEEL FRAME

DAYBAR INDUSTRIES LTD
50 WEST DRIVE, BRAMPTON, ON CANADA, L6T 2J4
TEL: 905 625-8000 FAX: 905 625-4204

REV. No	DESCRIPTION	DATE	REV. No	DESCRIPTION	DATE
1	OLD 09-031	01/17/12	3		
2	–	–	4		

DRAWN BY: L.G./A.G.
01/17/12 DATE
12-011 DRAWING No
SHEET 13 OF 14

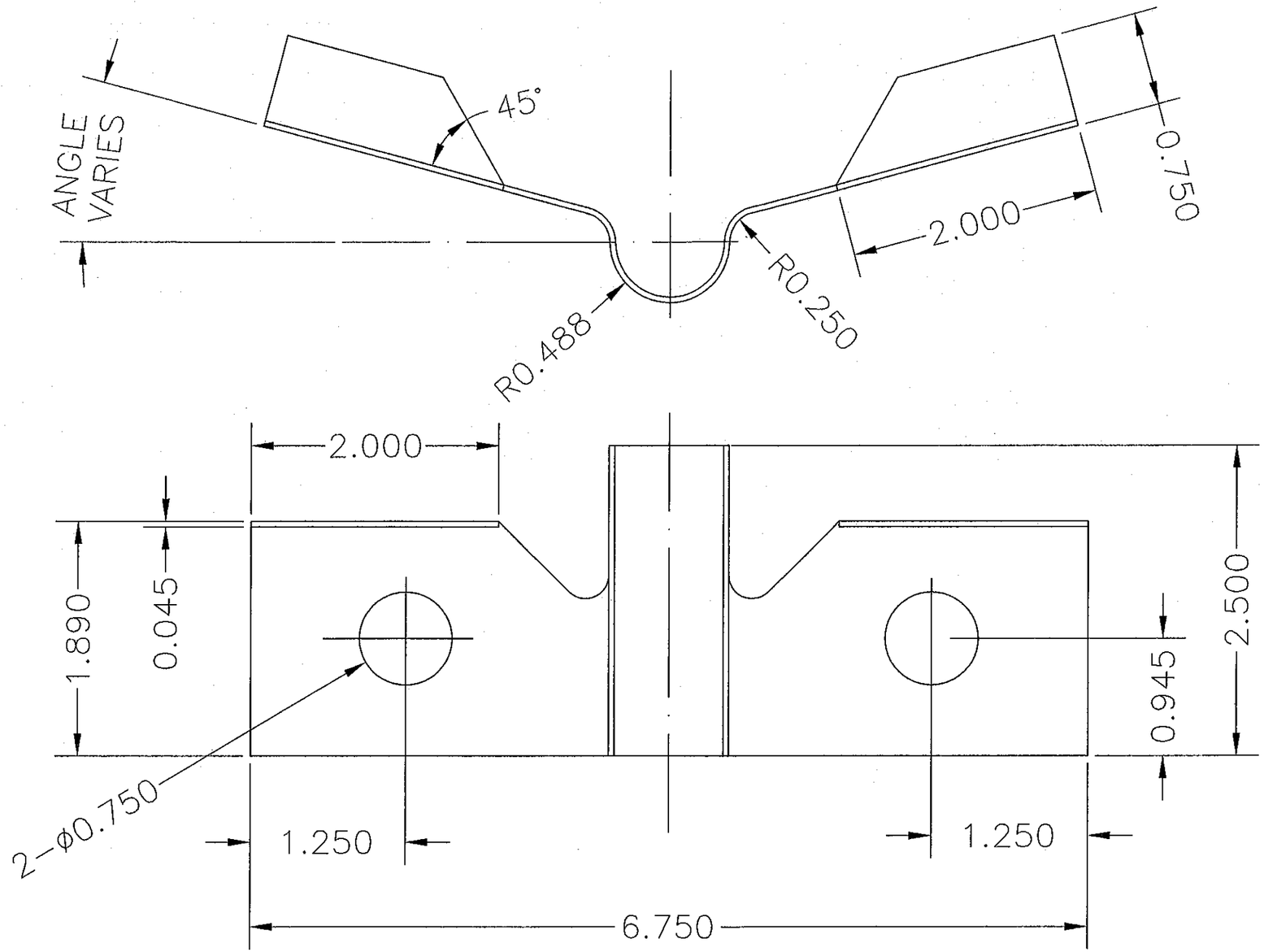

PRODUCT REVISED
as complying with the Florida
Building Code
Acceptance No 12-0216.06
Expiration Date 4/10/13
By Shang L. Chang
Miami Dade Product Control

MATERIAL:
18 GA SATIN COAT

EMA BUTTERFLY ANCHOR

WALTER A. TILLIT JR.
LICENSE
No. 44167
STATE OF FLORIDA
PROFESSIONAL ENGINEER

FLORIDA BUILDING CODE (HIGH VELOCITY HURRICANE ZONE)

© 2012 TILTECO INC. (ENGINEERING)

TILTECO INC.
TILLIT TESTING & ENGINEERING COMPANY
6355N.W. 36th. St., Ste. 305, VIRGINIA GARDENS, Fl. 33166
Phone : (305)871-1530 . Fax : (305)871-1531
e-mail: tilteco@aol.com
1"=1'EB-0006719
WALTER A. TILLIT Jr. P.E.
FLORIDA Lic. # 44167

SERIES LS18 FLUSH OUTSWING COMMERCIAL STEEL DOOR W/SERIES "AS" STEEL FRAME

DAYBAR INDUSTRIES LTD
50 WEST DRIVE, BRAMPTON,
ON CANADA, L6T 2J4
TEL: 905 625-8000 FAX: 905 625-4204

REV. No	DESCRIPTION	DATE	REV. No	DESCRIPTION	DATE
1	OLD 09-031	01/17/12	3		
2	–	–	4		

DRAWN BY: L.G./A.G.
01/17/12 DATE
12-011 DRAWING No
SHEET 13A OF 14

DAYBAR INDUSTRIES LIMITED

BILL OF MATERIALS:

ITEM	QUANTITY	MATERIAL	BASIC DIMENSIONS OR ADDITIONAL DETAILS
1	1	16 GAUGE WELDED FRAME	AS 5 3/4" JAMB DEPTH X 2" FACE X .057 MIN
2	1	18 GAUGE FLUSH DOOR COMMERCIAL STEEL	1 3/4" THICK X (.045 MIN). C/W PAPER HONEY COMB CORE
3	3	HINGE REINFORCINGS (DOOR)	1 1/4" X 10" X 10 GAUGE (.135 MIN)
4	3	HINGE REINFORCINGS (FRAME)	1 1/2" X 8 3/4" X 10 GAUGE (.135 MIN)
5	1	STRIKE REINFORCINGS (FRAME)	1 3/8" X 7 5/16" X 14 GAUGE (.072 MIN)
6	6	WIRE MASONRY FRAME ANCHORS (3 PER JAMB) (OR)	9 1/2" LONG X 10 GAUGE (.135 MIN)
7	6	CLIPIN STUD ANCHORS (3 PER JAMB) (OR)	1 7/8" X 5 5/8" X 20 GAUGE (.035 MIN)
8	6	EMA ANCHOR BOLTS (4 PER JAMB) (OR)	3/8" X 5" STEEL UNICAN-SLEEVE ANCHOR
9	6	CARRIAGE ANCHOR BOLTS (4 PER JAMB) (OR)	3/8"-16 X 6" STEEL CARRIAGE BOLT C/W NUT AND WASHER
10	3	HINGES-HAGER BB1191	4.5" X 4.5" STANDARD WEIGHT (.134 THICK)
11	1	RIM EXIT: DETEX VALUE SERIES C/W OPTIONAL ALARM	N/A
12	1	MORTISE LOCK: MARKS SERIES 5	N/A
13	1	CYLINDRICAL LOCK: MARKS SERIES 170 GRADE #1	N/A
14	1	DEAD BOLT: MARKS SERIES 130	N/A
15	1	WEATHER STRIP: NATIONAL GUARD PRODUCTS #120NA	SECURED WITH #6 X 1/2" SMS SCREWS
16	1	THRESHOLD: NATIONAL GUARD PRODUCTS #950NA	EXTRUDED ALUMINUM
17	1	CAULKING: GE SILICONE II	N/A

PRODUCT REVISED
as complying with the Florida
Building Code
Acceptance No 12-0216.06
Expiration Date APR 10, 2013
By [signature]
Miami Dade Product Control

WALTER A. TILLIT JR.
LICENSE
No. 44167
STATE OF FLORIDA
PROFESSIONAL ENGINEER

FLORIDA BUILDING CODE (HIGH VELOCITY HURRICANE ZONE)

© 2012 TILTECO INC. (ENGINEERING)

TILTECO INC.
TILLIT TESTING & ENGINEERING COMPANY
6355N.W. 36th. St., Ste. 305, VIRGINIA GARDENS, Fl. 33166
Phone : (305)871-1530 . Fax : (305)871-1531
e-mail: tilteco@aol.com
EB-0006719
WALTER A. TILLIT Jr. P.E.
FLORIDA Lic. # 44167

SERIES LS18 FLUSH OUTSWING COMMERCIAL STEEL DOOR W/SERIES "AS" STEEL FRAME

DAYBAR INDUSTRIES LTD
50 WEST DRIVE, BRAMPTON,
ON CANADA, L6T 2J4
TEL: 905 625-8000 FAX: 905 625-4204

REV. No	DESCRIPTION	DATE	REV. No	DESCRIPTION	DATE
1	OLD 09-031	01/17/12	3		
2	–	–	4		

DRAWN BY: L.G./A.G.
01/17/12 DATE
12-011 DRAWING No
SHEET 14 OF 14