MIAMI-DADE COUNTY
DEPARTMENT OF PERMITTING, ENVIRONMENT, AND REGULATORY AFFAIRS (PERA)
BOARD AND CODE ADMINISTRATION DIVISION

MIAMI–DADE COUNTY, FLORIDA
PRODUCT CONTROL SECTION
11805 SW 26 Street, Room 208
Miami, Florida 33175–2474
T (786) 315–2590 F (786) 315–2599
www.miamidade.gov/pera/

NOTICE OF ACCEPTANCE (NOA)

CGI Windows & Doors
10100 NW 25 Street
Miami, Fl. 33172

SCOPE:

This NOA is being issued under the applicable rules and regulations governing the use of construction materials. The documentation submitted has been reviewed and accepted by Miami–Dade County PERA–Product Control Section to be used in Miami–Dade County and other areas where allowed by the Authority Having Jurisdiction (AHJ).

This NOA shall not be valid after the expiration date stated below. The Miami–Dade County Product Control Section (In Miami–Dade County) and/or the AHJ (in areas other than Miami–Dade County) reserve the right to have this product or material tested for quality assurance purposes. If this product or material fails to perform in the accepted manner, the manufacturer will incur the expense of such testing and the AHJ may immediately revoke, modify, or suspend the use of such product or material within their jurisdiction. PERA reserves the right to revoke this acceptance, if it is determined by Miami–Dade County Product Control Section that this product or material fails to meet the requirements of the applicable building code.

This product is approved as described herein, and has been designed to comply with the Florida Building Code, including the High Velocity Hurricane Zone.

DESCRIPTION: Series "360" Aluminum Single Hung Window – L.M.I.

APPROVAL DOCUMENT: Drawing No. **W05–04**, titled Series "Aluminum Single Hung Window (L.M.I.)", sheets 1, 1A, 2, 2A, 3, 3A, 4, 4A and 5 through 10 of 14, dated 01/28/05, prepared by Al–Farooq Corporation, with the latest revision "**D**" dated 01/03/12, signed and sealed by Javad Ahmad, P. E., bearing the Miami–Dade County Product Control Revision stamp with the Notice of Acceptance number and Expiration date by the Miami–Dade County Product Control Section.

MISSILE IMPACT RATING: Large Missile Impact Resistant.

LIMITATIONS: Glass lites wider than 36" shall have two setting blocks per FBC requirements.

LABELING: Each unit shall bear a permanent label with the manufacturer's name or logo, city, state, model/ series and following statement: "Miami–Dade County Product Control Approved" unless otherwise noted herein.

RENEWAL of this NOA shall be considered after a renewal application has been filed and there has been no change in the applicable building code negatively affecting the performance of this product.

TERMINATION of this NOA will occur after the expiration date or if there has been a revision or change in the materials, use, and/or manufacture of the product or process. Misuse of this NOA as an endorsement of any product, for sales, advertising or any other purposes shall automatically terminate this NOA. Failure to comply with any section of this NOA shall be cause for termination and removal of NOA.

ADVERTISEMENT: The NOA number preceded by the words Miami–Dade County, Florida, and followed by the expiration date may be displayed in advertising literature. If any portion of the NOA is displayed, then it shall be done in its entirety.

INSPECTION: A copy of this entire NOA shall be provided to the user by the manufacturer or its distributors and shall be available for inspection at the job site at the request of the Building Official.

This NOA **revises NOA No. 09–1210.05** and consists of this page 1, evidence pages E–1 and E–2, as well as approval document mentioned above.

The submitted documentation was reviewed by **Jaime D. Gascon, P. E.**

MIAMI-DADE COUNTY APPROVED

J. Gascon
4/27/12

NOTICE OF ACCEPTANCE: EVIDENCE SUBMITTED

A. DRAWINGS

1. Manufacturer's die drawings and sections.
   (Submitted under previous NOA No. 08–1208.06 and 05–0215.02)
2. Drawing No. **W05–04**, titled Series "Aluminum Single Hung Window (L.M.I.)", sheets 1, 1A, 2, 2A, 3, 3A, 4, 4A and 5 through 10 of 14, dated 01/28/05, prepared by Al–Farooq Corporation, with the latest revision "**D**" dated 01/03/12, signed and sealed by Javad Ahmad, P. E.

B. TESTS

1. Test reports on:
   1) Air Infiltration Test, per FBC, TAS 201–94
   2) Uniform Static Air Pressure Test, Loading per FBC, TAS 202–94
   3) Water Resistance Test, per FBC, TAS 202–94
   4) Small Missile Impact Test, per FBC, TAS 201–94
   5) Cyclic Wind Pressure Loading, per FBC, TAS 203–94
   6) Forced Entry Test, Type "A–A" vertical sliding window, Grade 10, per FBC 2411 3.2.1, TAS 202–94, per ASTM F 588–04, AAMA 1302.5–04 and CAWM 301–04

   along with marked–up drawings and installation diagram of aluminum single hung windows, prepared by Hurricane Test Laboratory, LLC, Test Report No. **HTL–0080–0402–08, specimens 1, 2, 3** and **4**, and **HTL–0080–0323–04, specimens 1, 2, 3, 4, 5, 6, 7** and **9**, dated 04/03/08–07/22/08 and 03/29/04–04/02/04, both signed and sealed by Vinu J. Abraham, P. E.
   (Submitted under previous NOA's No.'s 08–1208.06 and 05–0215.02)

C. CALCULATIONS

1. Anchor verification calculations and structural analysis, complying with FBC–2010, dated 02/12/12, prepared by Al–Farooq Corporation, signed and sealed by Javad Ahmad, P. E.
2. **Glazing complies with ASTM E1300–04/ 09**

D. QUALITY ASSURANCE

1. Miami–Dade Department of Permitting, Environment, and Regulatory Affairs (PERA).

E. MATERIAL CERTIFICATIONS

1. Notice of Acceptance No. **11–0624.02** issued to E.I. DuPont DeNemours & Co., Inc. for their "**DuPont Sentry Glass® Interlayer**" dated 05/26/2010, expiring on 01/14/17.

Jaime D. Gascon, P. E.
Product Control Section Supervisor
NOA No. 12–0221.14
Expiration Date: May 05, 2015
Approval Date: May 03, 2012

NOTICE OF ACCEPTANCE: EVIDENCE SUBMITTED

E. MATERIAL CERTIFICATIONS (CONTINUED)

2. Notice of Acceptance No. **08-0520.08** issued to **Solutia, Inc.** for their "**Vanceva Composites Glass Interlayer**" dated 07/17/08, expiring on 12/11/13.
3. Notice of Acceptance No. **08-0206.01** issued to **Solutia, Inc.** for their "**Saflex HP Glass Interlayer**" dated 04/17/08, expiring on 04/14/13.

F. STATEMENTS

1. Statement letter of no financial interest, conformance and compliance with the FBC–2010, dated 01/20/12, signed and sealed by Javad Ahmad, P. E.
2. Laboratory compliance letters for Test Report No. **HTL–0080–0402–08, specimens 1, 2, 3** and **4**, issued by Hurricane Test Laboratory, Inc., dated 07/22/08, signed and sealed by Vinu J. Abraham, P. E.
   (Submitted under previous NOA No. 08–1208.06)
3. Laboratory compliance letters for Test Report No. **HTL–0080–0323–04, specimens 1, 2, 3, 4, 5, 6, 7** and **9**, issued by Hurricane Test Laboratory, Inc., dated 04/02/04, signed and sealed by Vinu J. Abraham, P. E.
   (Submitted under previous NOA No. 05–0215.02)

G. OTHERS

1. Notice of Acceptance No. **09–1210.05**, issued to CGI Windows & Doors for their "Series–360 Aluminum Single Hung Window – L.M.I.", approved on 04/07/10 and expiring on 05/05/15.

Jaime D. Gascon, P. E.
Product Control Section Supervisor
NOA No. 12–0221.14
Expiration Date: May 05, 2015
Approval Date: May 03, 2012

General Window Sections

FRAME AND VENT DETAILS FOR GLASS TYPES 1 & 2.
SEE SHEETS 3 & 4 FOR CAPACITIES.

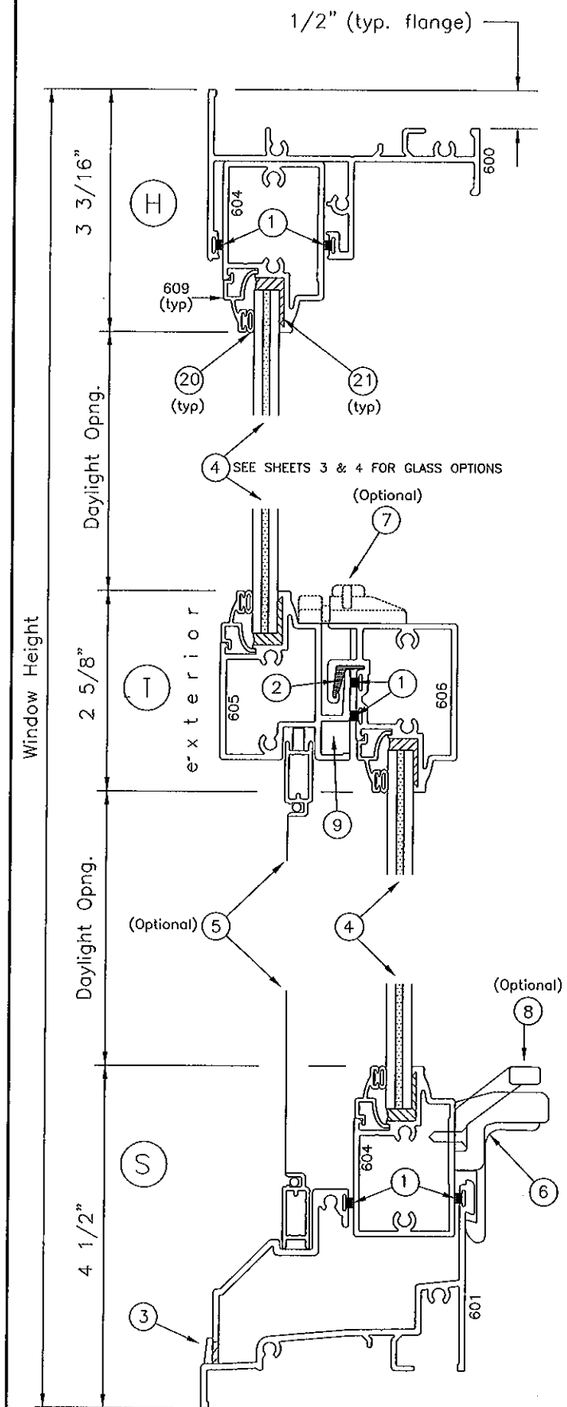

Standard 12 Psf Sill

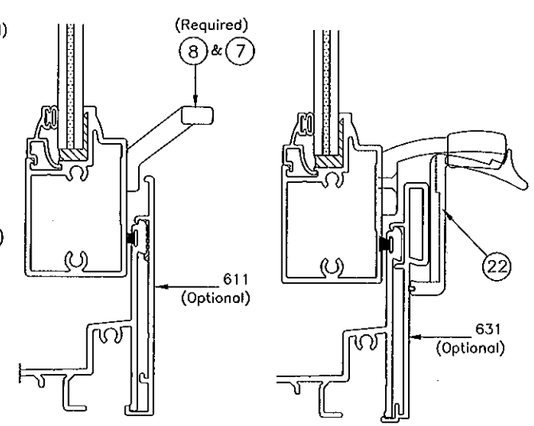

Optional 15 PSF Water Bar Adaptors

Can not be used with lock type 6

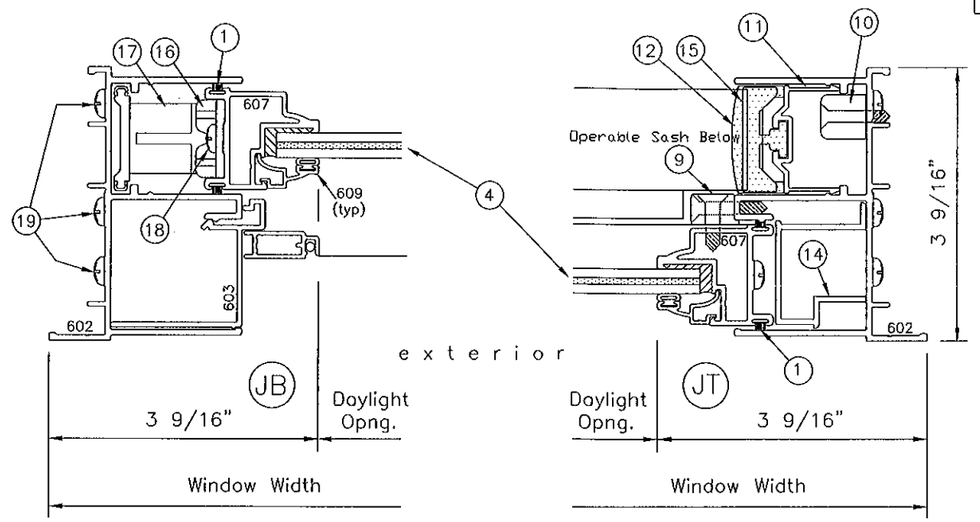

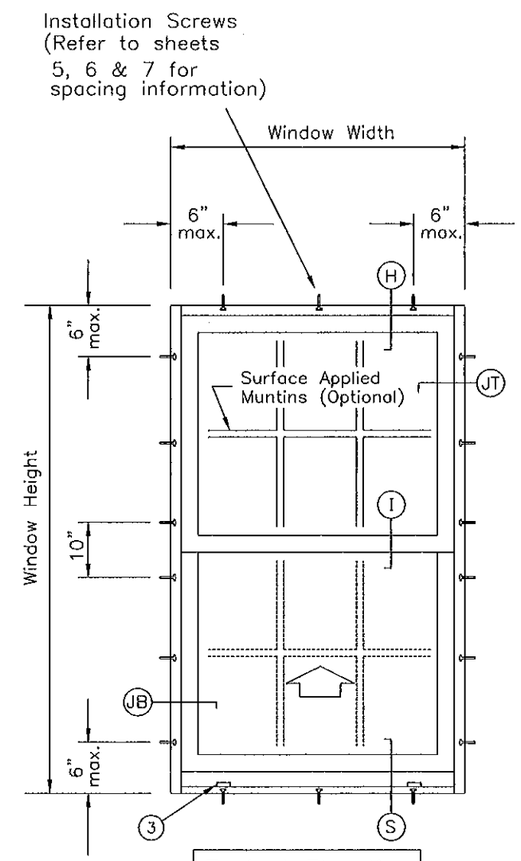

Typical Elevation

INSTRUCTIONS FOR USING CAPACITY CHARTS:

STEP 1 DETERMINE THE REQUIRED DESIGN PRESSURES FOR A GIVEN WINDOW OPENING.

STEP 2 DETERMINE THE CAPACITY OF THE WINDOW SIZE/CONFIGURATION/GLASS TYPE FROM CHARTS ON SHEETS 3 AND 4.

STEP 3 DETERMINE THE ANCHOR CAPACITY FROM SHEET 7 FOR SINGLE OPENINGS, APPLICABLE TO ANCHORS TYPE A, B OR C SHOWN ON SHEETS 5 AND 6.

STEP 4 IF ALUMINUM BUCKS ARE USED, VERIFY THE BUCK INSTALLATION CAPACITY FROM SHEET 9.

STEP 5 FOR UNCLIPPED MULLED WINDOWS DETERMINE MULLION/MULLION ANCHORS CAPACITY FOR 1X4 TUBE MULLION FROM CHARTS ON SHEET 8.

STEP 6 IF ALUMINUM BUCKS ARE USED DETERMINE BUCK ANCHORING REQUIREMENTS FROM CHARTS ON SHEET 10.

THE LOWEST SELECTED VALUE APPLY TO THE INSTALLATION AND MUST EQUAL OR EXCEED THE REQUIRED DESIGN PRESSURES OBTAINED FROM STEP 1.

ALUMINUM SINGLE HUNG WINDOWS

APPROVAL APPLIES TO SINGLE UNITS OR SIDE BY SIDE COMBINATIONS OF S.H./S.H. OR SINGLE HUNG WITH OTHER MIAMI-DADE COUNTY APPROVED WINDOWS USING MIAMI-DADE COUNTY APPROVED MULLIONS IN BETWEEN.
LOWER DESIGN PRESSURE FROM WINDOWS OR MULLION APPROVAL WILL APPLY TO ENTIRE SYSTEM.

THIS PRODUCT HAS BEEN DESIGNED AND TESTED TO COMPLY WITH THE REQUIREMENTS OF THE FLORIDA BUILDING CODE INCLUDING HIGH VELOCITY HURRICANE ZONE (HVHZ).

WOOD BUCKS BY OTHERS, MUST BE ANCHORED PROPERLY TO TRANSFER LOADS TO THE STRUCTURE.

ANCHORS SHALL BE AS LISTED, SPACED AS SHOWN ON DETAILS, ANCHORS EMBEDMENT TO BASE MATERIAL SHALL BE BEYOND WALL DRESSING OR STUCCO.

ANCHORING OR LOADING CONDITIONS NOT SHOWN IN THESE DETAILS ARE NOT PART OF THIS APPROVAL.

A LOAD DURATION INCREASE IS USED IN DESIGN OF ANCHORS INTO WOOD ONLY.

MATERIALS INCLUDING BUT NOT LIMITED TO STEEL/METAL SCREWS, THAT COME INTO CONTACT WITH OTHER DISSIMILAR MATERIALS SHALL MEET THE REQUIREMENTS OF THE FLORIDA BLDG. CODE SECTION 2003.8.4.

THESE WINDOWS ARE RATED FOR LARGE MISSILE IMPACT. SHUTTERS ARE NOT REQUIRED.

PRODUCT REVISED
as complying with the Florida
Building Code 12-0221.14
Acceptance No
Expiration Date 05/05/2015
By
Miami Dade Product Control

Engr: JAVAD AHMAD
CIVIL
FLA. PE # 70592
C.A.N. 3538

FEB 09 2012

AL-FAROOQ CORPORATION
ENGINEERS & PRODUCT DEVELOPMENT
1235 S.W. 87 AVE
MIAMI, FLORIDA 33174
TEL. (305) 264-8100 FAX. (305) 262-6978

COMP-ANL\W005-04CGI

ALUMINUM SINGLE HUNG WINDOW (L.M.I.)

CGI WINDOWS & DOORS
10100 N.W. 25TH STREET
MIAMI, FL. 33172
TEL. (305) 593-6590 FAX. (305) 593-6592

revisions:

no	date	by	description
A	07.02.08		UPDATED FOR 2007 FBC
B	08.07.08		REV. PER BCCO COMMENTS
C	11.12.08		NOTES REV.
D	01.03.12		UPDATED TO 2010 FBC

date: 01-28-05
scale: -
dr. by: -
chk. by:

drawing no.
W05-04

FRAME AND VENT DETAILS FOR GLASS TYPES 3, 3A, 4 AND 4A.
SEE SHEETS 3A & 4A FOR CAPACITIES.
OPTIONAL TOP RAIL SWEEP LOCK NOT AVAILABLE WITH THESE GLASS TYPES.

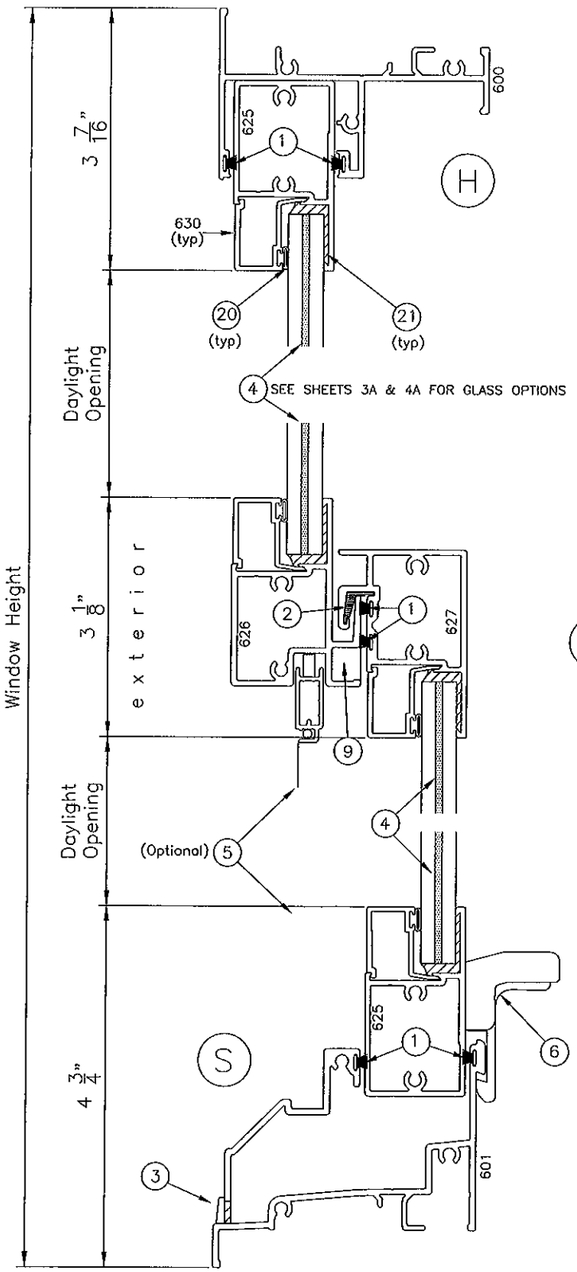

Standard 12 Psf Sill

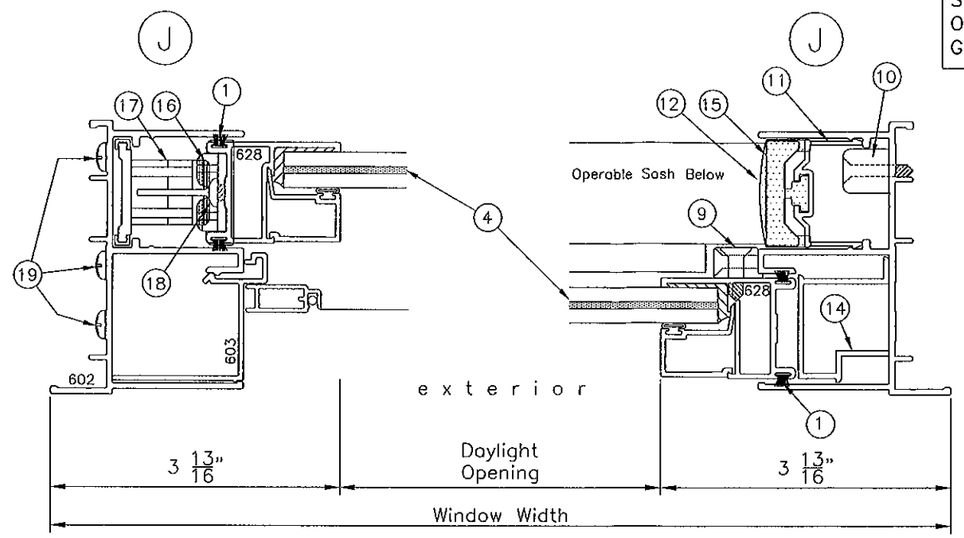

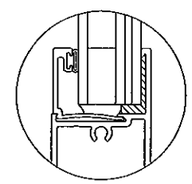

Glazing at Insulated Laminated

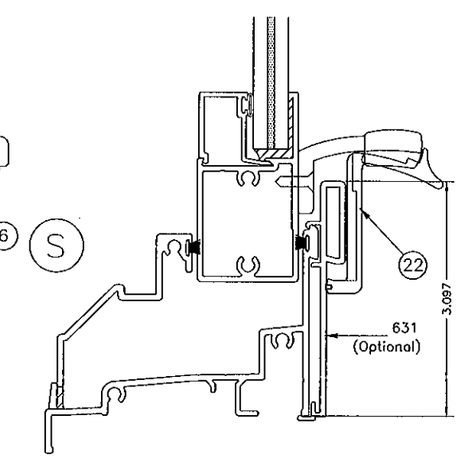

Optional 15 PSF Water Bar Adaptor

Can not be used with lock type ⑥

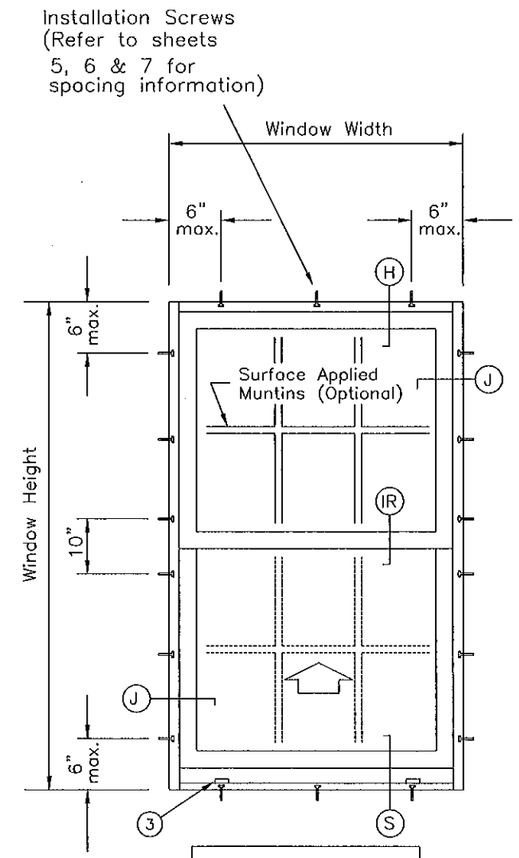

Typical Elevation

Engr: JAVAD AHMAD
CIVIL
FLA. PE # 70592
C.A.N. 3538

FEB 09 2012

PRODUCT REVISED
as complying with the Florida
Building Code
Acceptance No 12-0221.14
Expiration Date 03/05/2013
By
Miami Dade Product Control

AL-FAROOQ CORPORATION
ENGINEERS & PRODUCT DEVELOPMENT
1235 S.W. 87 AVE
MIAMI, FLORIDA 33174
TEL. (305) 264-8100 FAX. (305) 262-6978

COMP-ANL\W005-04CGI

ALUMINUM SINGLE HUNG WINDOW (L.M.I.)

CGI WINDOWS & DOORS
10100 N.W. 25TH STREET
MIAMI, FL. 33172
TEL. (305) 593-6590 FAX. (305) 593-6592

revisions:			
no	date	by	description
C	11.12.08		NEW SHEET ADDED
D	01.03.12		NO CHANGE THIS SHEET

date: 01-28-05
scale: -
dr. by: -
chk. by:

drawing no.
W05-04

sheet 1A of 10

Bill of Materials

ITEM	PART #	QUANTITY	DESCRIPTION	MATERIAL	MANF./SUPPLIER	REMARKS
1	W23201NG	AS REQD.	WOOL PILE WITH CENTER SOFT FIN (GRAY)	PILE	ULTRAFAB/SCHLEGEL	
2	CGI-612P	AS REQD.	PLASTIC BUMPER GUIDE	PVC	PROTOTYPE PLASTIC EXTRUSIONS	CONTINUOUS AT INTERLOCK
3	#146-4	2	WEEP HOLE COVER	NYLON	BUILDERS PLASTIC COMPANY	
4	N/A	AS REQD.	GLAZING	GLASS	VARIES	
5	N/A	1	COMPLETE SCREEN	ALUM/MESH		
6	CGI-615C & 616C	1 OR 2	COMBINATION EGRESS LOCK AND LIFT/PULL ATTACHED W/(2) #8 X 5/8" FH SMS	ZINC	CUSTOM CASTING	1 @ WDWS. 28" WIDE & SMALLER 2 @ WDWS. OVER 28" WIDE
7	A30700 & C30705	1 OR 2	OPTIONAL SWEEP LOCK & KEEPER (replaces item 6) ATTACHED W/(4) #6 X 5/8" FH SMS	ZINC	TRUTH HARDWARE OR EQUIV.	1 @ WDWS. 28" WIDE & SMALLER 2 @ WDWS. OVER 28" WIDE
8	18-11-XX-100	1 OR 2		ZINC	TRUTH HARDWARE OF EQUIV.	1 @ WDWS. 28" WIDE & SMALLER 2 @ WDWS. OVER 28" WIDE
9	CGI-614C	2	TIE DOWN BLOCK	ZINC	CUSTOM CASTING	
10	VARIES	2	BALANCES (B&T OR SPIRAL)	VARIES	VARIES	BOTH BALANCES CAN BE USED
11	CGI-617P	2	BALANCE COVER	PVC	PROTOTYPE PLASTIC EXTRUSIONS	LOCATED AT TOP HALF OF EACH JAMB
12	CGI-618P	2	VENT STOP	PVC	PROTOTYPE PLASTIC EXTRUSIONS	LOCATED AT TOP OF JAMBS
14	CGI-613P	2	FIXED VENT SHIM	PVC	PROTOTYPE PLASTIC EXTRUSIONS	LOCATED AT TOP OF FIXED VENT
15	CGI-619P	2	TOP GUIDE AT OPERABLE VENT	NYLON	CUSTOM CASTING	
16	CGI-622N	2	BOTTOM GUIDE/CLIP AT OPERABLE VENT	NYLON	CUSTOM CASTING	
17	CGI-620C & 621N	2	CARRIER SYSTEM	ZINC	CUSTOM CASTING	OPTIONAL - BALANCE ATTACHES TO IT
18	N/A	16	VENT ASSEMBLY SCREWS	S/S	VARIES	#10 X 1 1/4" PH SMS (2 PER CORNER)
19	N/A	12	FRAME ASSEMBLY SCREWS	S/S	VARIES	#10 X 1 1/4" PH SMS (2 PER CORNER)
20	CGI-382V	AS REQD.	VINYL BULB	PVC	PROTOTYPE PLASTIC EXTRUSIONS	
21	VARIES	AS REQD.	STUCTURAL SILICONE	SILICONE	3 SILICONES	GE-1200, GE-2000, & DOW 995
22	CGI-632	1 OR 2	COMBINATION EGRESS WB LOCK & LIFT/PULL ATTACHED W/(2) #8 X 5/8" FH SMS	ZINC	CUSTOM CASTING (FOR USE WITH WATERBAR)	1 @ WDWS. 28" WIDE & SMALLER 2 @ WDWS. OVER 28" WIDE

PRODUCT REVISED
as complying with the Florida Building Code
Acceptance No. 12-0221.14
Expiration Date 05/05/2015
By
Miami Dade Product Control

Engr: JAVAD AHMAD.
CIVIL
FLA. PE # 70592
C.A.N. 3538
FEB 09 2012

AL-FAROOQ CORPORATION
ENGINEERS & PRODUCT DEVELOPMENT
1235 S.W. 87 AVE
MIAMI, FLORIDA 33174
TEL. (305) 264-8100 FAX. (305) 262-6978

COMP-ANL\W005-04CGI

ALUMINUM SINGLE HUNG WINDOW (L.M.I.)

CGI WINDOWS & DOORS
10100 N.W. 25TH STREET
MIAMI, FL. 33172
TEL. (305) 593-6590 FAX. (305) 593-6592

revisions:

no	date	by	description
A	07.02.08		UPDATED FOR 2007 FBC
B	08.07.08		NO CHANGE THIS SHEET
C	11.12.08		NO CHANGE THIS SHEET
D	01.03.12		NO CHANGE THIS SHEET

date: 01-28-05
scale: -
dr. by: -
chk. by:

drawing no.
W05-04

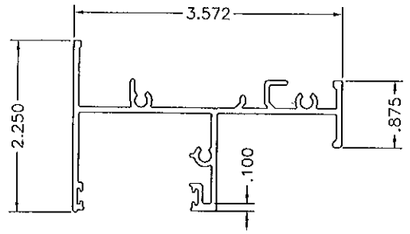

600–Frame Head
6063–T6

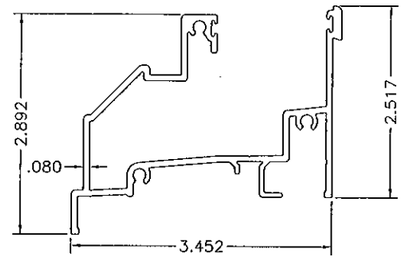

601–Frame Sill
6063–T6

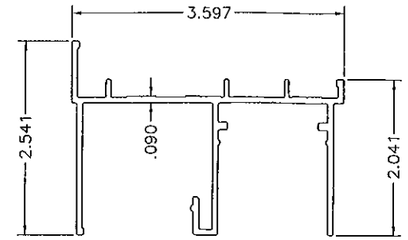

602–Frame Jamb
6063–T6

VENT SHAPES FOR GLASS TYPES 1 & 2

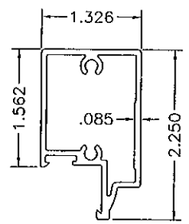

604–Horiz. Rail
6063–T6

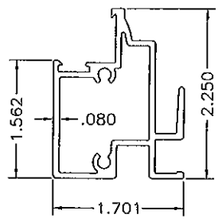

605–Fixed Intlck.
6063–T6

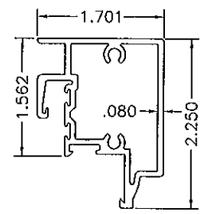

606–Moving Intlck.
6063–T6

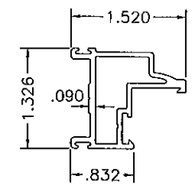

607–Side Rail
6063–T6

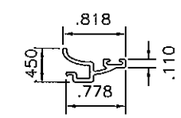

609–Glzg. Bead
6063–T5

VENT SHAPES FOR GLASS TYPES 3, 3A, 4 & 4A

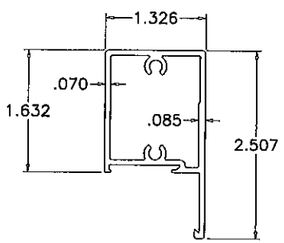

625–Horiz. Rail
6063–T6

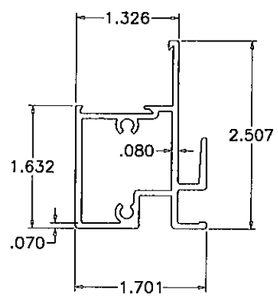

626–Fixed Intlck.
6063–T6

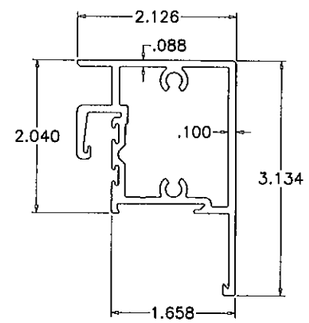

627–Moving Intlck.
6063–T6

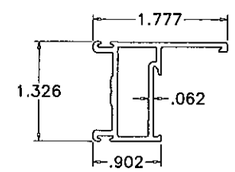

628–Side Rail
6063–T6

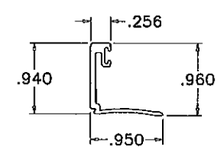

629–Glzg. Bead
6063–T6
For Glass Types 4 & 4A

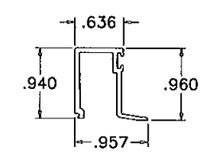

630–Glzg. Bead
6063–T6
For Glass Types 3 & 3A

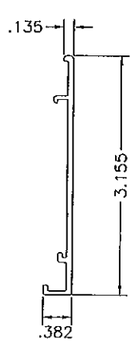

611–Waterbar
6063–T5

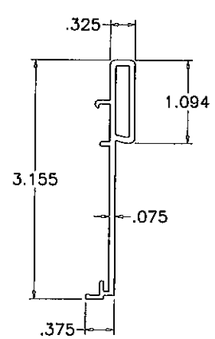

631–Waterbar
6063–T5

Engr: JAVAD AHMAD
CIVIL
FLA. PE # 70592
C.A.N. 3538

FEB 14 2012

PRODUCT REVISED
as complying with the Florida Building Code
Acceptance No 12-0221.14
Expiration Date 03/03/2015
By
Miami Dade Product Control

AL-FAROOQ CORPORATION
ENGINEERS & PRODUCT DEVELOPMENT
1235 S.W. 87 AVE
MIAMI, FLORIDA 33174
TEL. (305) 264-8100 FAX. (305) 262-6978
COMP–ANL\W005–04CGI

ALUMINUM SINGLE HUNG WINDOW (L.M.I.)

CGI WINDOWS & DOORS
10100 N.W. 25TH STREET
MIAMI, FL. 33172
TEL. (305) 593-6590 FAX. (305) 593-6592

revisions:			
no	date	by	description
C	11.12.08		NEW SHEET ADDED
D	01.03.12		NO CHANGE THIS SHEET

date: 01-28-05
scale: –
dr. by: –
chk. by:

drawing no.
W05–04

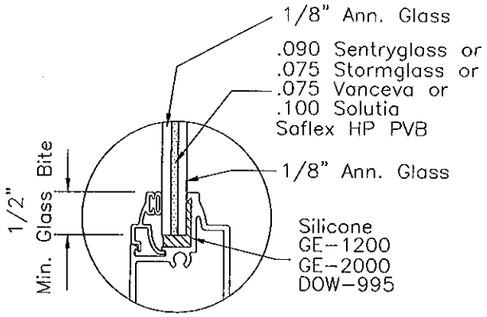

Glass Type "1"

5/16" Nominal Glass
Annealed/Annealed

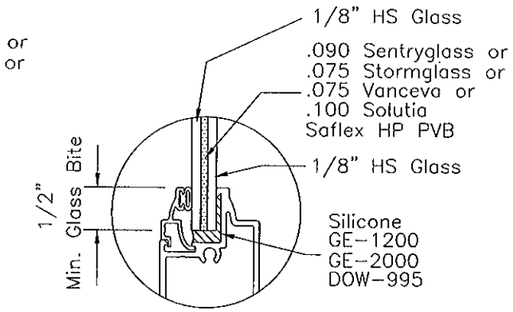

Glass Type "2"

5/16" Nominal Glass
HS/HS

Supplemental Test Results for:

Air Infiltration – Water Leakage Resistance – Forced Entry

Test Type and Method	Results
Air Infiltration Test (ASTM–E283)	
@ 1.57 psf pressure differential	PASSED (.044 C.F. / Min / Sq Ft)
@ 6.24 psf pressure differential	PASSED (.076 C.F. / Min / Sq Ft)
Water Leakage Test (ASTM–E331)	No leakage allowed
without waterbar adaptor	PASSED @ 12.0 PSF
with waterbar adaptor	PASSED @ 15.0 PSF
Forced Entry Resistance test (ASTM F588 & Grade 10)	PASSED

EQUAL LITES WINDOWS

DESIGN LOAD CAPACITY – PSF

WINDOW DIMS.		GLASS TYPE '1'		GLASS TYPE '2'	
WIDTH	HEIGHT	EXT.(+)	INT.(–)	EXT.(+)	INT.(–)
24"	48"	100.0	210.0	100.0	210.0
30"		100.0	210.0	100.0	210.0
32"		100.0	210.0	100.0	210.0
36"		100.0	180.0	100.0	210.0
42"		100.0	144.0	100.0	210.0
48"		100.0	120.0	100.0	200.0
54"		100.0	102.9	100.0	171.4
24"	60"	100.0	210.0	100.0	210.0
30"		100.0	199.7	100.0	210.0
32"		100.0	190.3	100.0	210.0
36"		100.0	164.3	100.0	210.0
42"		100.0	128.0	100.0	210.0
48"		100.0	104.7	100.0	120.0
54"		88.6	88.6	100.0	120.0
24"	72"	100.0	201.1	100.0	210.0
30"		100.0	162.1	100.0	210.0
32"		100.0	167.6	100.0	210.0
36"		100.0	150.7	100.0	210.0
42"		100.0	120.0	100.0	120.0
48"		96.0	96.0	100.0	120.0
54"		80.0	80.0	100.0	120.0
24"	84"	100.0	179.1	100.0	210.0
30"		100.0	143.4	100.0	210.0
32"		100.0	135.3	100.0	210.0
36"		100.0	120.0	100.0	120.0
42"		100.0	106.1	100.0	120.0
48"		85.6	85.6	100.0	120.0
54"		74.8	74.8	100.0	120.0

EQUAL LITES WINDOWS

DESIGN LOAD CAPACITY – PSF

WINDOW DIMS.		GLASS TYPE '1'		GLASS TYPE '2'	
WIDTH	HEIGHT	EXT.(+)	INT.(–)	EXT.(+)	INT.(–)
24"	96"	100.0	161.9	100.0	210.0
30"		100.0	118.8	100.0	120.0
32"		100.0	111.9	100.0	120.0
36"		100.0	101.5	100.0	120.0
42"		85.4	85.4	100.0	120.0
48"		76.2	76.2	100.0	120.0
54"		68.9	68.9	100.0	120.0
24"	108"	100.0	142.4	100.0	210.0
30"		100.0	102.2	100.0	120.0
32"		94.9	94.9	100.0	120.0
36"		85.9	85.9	100.0	120.0
42"		75.3	75.3	100.0	120.0
48"		68.6	68.6	100.0	120.0
24"	120"	100.0	120.0	100.0	120.0
30"		90.7	90.7	100.0	120.0
32"		83.6	83.6	100.0	120.0
36"		75.9	75.9	100.0	120.0
42"		66.4	66.4	100.0	120.0

EQUAL LITES WINDOWS

DESIGN LOAD CAPACITY – PSF

WINDOW DIMS.		GLASS TYPE '1'		GLASS TYPE '2'	
WIDTH	HEIGHT	EXT.(+)	INT.(–)	EXT.(+)	INT.(–)
19-1/8"	26"	100.0	210.0	100.0	210.0
26-1/2"		100.0	210.0	100.0	210.0
37"		100.0	210.0	100.0	210.0
53-1/8"		100.0	171.1	100.0	210.0
19-1/8"	38-3/8"	100.0	210.0	100.0	210.0
26-1/2"		100.0	210.0	100.0	210.0
37"		100.0	197.2	100.0	210.0
53-1/8"		100.0	124.1	100.0	206.9
19-1/8"	50-5/8"	100.0	210.0	100.0	210.0
26-1/2"		100.0	210.0	100.0	210.0
37"		100.0	168.3	100.0	210.0
53-1/8"		100.0	101.2	100.0	168.7
19-1/8"	63"	100.0	210.0	100.0	210.0
26-1/2"		100.0	207.5	100.0	210.0
37"		100.0	154.9	100.0	210.0
53-1/8"		88.1	88.1	100.0	120.0
19-1/8"	72"	100.0	210.0	100.0	210.0
26-1/2"		100.0	181.5	100.0	210.0
37"		100.0	146.8	100.0	210.0
53-1/8"		82.0	82.0	100.0	120.0
19-1/8"	76"	100.0	210.0	100.0	210.0
26-1/2"		100.0	171.4	100.0	210.0
37"		100.0	136.6	100.0	210.0
53-1/8"		80.0	80.0	100.0	120.0

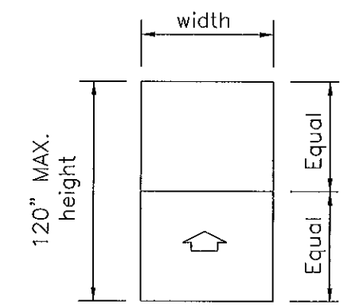

Equal Lite Window

PRODUCT REVISED
as complying with the Florida
Building Code
Acceptance No 12-0221.14
Expiration Date 05/05/2015
By
Miami Dade Product Control

NOTE:
GLASS CAPACITIES ON THIS SHEET ARE
BASED ON ASTM E1300-04 (3 SEC. GUSTS)
AND FLORIDA BUILDING COMMISSION
DECLARATORY STATEMENT DCA05-DEC-219

All values shown are Design PSF (Pounds per Square Foot)

VALUES FOR EXTERIOR LOADS(+) SHOWN ARE
FOR SILL WITH WATERBAR ADAPTER
FOR WINDOWS WITHOUT WATERBAR ADAPTER
LIMIT EXTERIOR(+) LOADS TO 80.0 PSF

Engr: JAVAD AHMAD
CIVIL
FLA. PE # 70592
C.A.N. 3538

FEB 09 2012

AL-FAROOQ CORPORATION
ENGINEERS & PRODUCT DEVELOPMENT
1235 S.W. 87 AVE
MIAMI, FLORIDA 33174
TEL (305) 264-8100 FAX. (305) 262-6978
COMP-ANL\W005-04CGI

ALUMINUM SINGLE HUNG WINDOW (L.M.I.)

CGI WINDOWS & DOORS
10100 N.W. 25TH STREET
MIAMI, FL. 33172
TEL. (305) 593-6590 FAX. (305) 593-6592

revisions:

no	date	by	description
A	07.02.08		UPDATED FOR 2007 FBC
B	08.07.08		NO CHANGE THIS SHEET
C	11.12.08		NO CHANGE THIS SHEET
D	01.03.12		UPDATED TO 2010 FBC

date: 01-28-05
scale: –
dr. by: –
chk. by:

drawing no.
W05-04

NOTE:
GLASS CAPACITIES ON THIS SHEET ARE
BASED ON ASTM E1300-04 (3 SEC. GUSTS)
AND FLORIDA BUILDING COMMISSION
DECLARATORY STATEMENT DCA05-DEC-219

EQUAL LITES WINDOWS

DESIGN LOAD CAPACITY - PSF

WINDOW DIMS.		GLASS TYPE '3'		GLASS TYPE '3A'		GLASS TYPE '4'		GLASS TYPE '4A'	
WIDTH	HEIGHT	EXT.(+)	INT.(-)	EXT.(+)	INT.(-)	EXT.(+)	INT.(-)	EXT.(+)	INT.(-)
24"	48"	100.0	210.0	100.0	210.0	100.0	210.0	100.0	210.0
30"		100.0	210.0	100.0	210.0	100.0	210.0	100.0	210.0
32"		100.0	210.0	100.0	210.0	100.0	210.0	100.0	210.0
36"		100.0	210.0	100.0	210.0	100.0	210.0	100.0	208.2
42"		100.0	210.0	100.0	210.0	100.0	210.0	100.0	175.9
48"		100.0	200.0	100.0	200.0	100.0	200.0	100.0	158.6
54"		100.0	171.4	100.0	171.4	100.0	171.4	100.0	139.5
24"	60"	100.0	210.0	100.0	210.0	100.0	210.0	100.0	210.0
30"		100.0	210.0	100.0	210.0	100.0	210.0	100.0	210.0
32"		100.0	210.0	100.0	210.0	100.0	210.0	100.0	202.2
36"		100.0	210.0	100.0	210.0	100.0	210.0	100.0	174.5
42"		100.0	210.0	100.0	210.0	100.0	210.0	100.0	153.8
48"		100.0	120.0	100.0	120.0	100.0	120.0	100.0	120.0
54"		100.0	120.0	100.0	120.0	100.0	120.0	100.0	106.3
24"	72"	100.0	210.0	100.0	210.0	100.0	210.0	100.0	210.0
30"		100.0	210.0	100.0	210.0	100.0	210.0	100.0	172.2
32"		100.0	210.0	100.0	191.2	100.0	210.0	100.0	178.0
36"		100.0	210.0	100.0	198.4	100.0	210.0	100.0	160.1
42"		100.0	120.0	100.0	120.0	100.0	120.0	100.0	120.0
48"		100.0	120.0	100.0	120.0	100.0	120.0	100.0	109.5
54"		100.0	120.0	100.0	120.0	100.0	120.0	90.5	90.5
24"	84"	100.0	210.0	100.0	210.0	100.0	210.0	100.0	190.2
30"		100.0	210.0	100.0	210.0	100.0	210.0	100.0	152.3
32"		100.0	210.0	100.0	210.0	100.0	210.0	100.0	143.7
36"		100.0	120.0	100.0	120.0	100.0	120.0	100.0	120.0
42"		100.0	120.0	100.0	120.0	100.0	120.0	100.0	112.7
48"		100.0	120.0	100.0	120.0	100.0	120.0	90.9	90.9
54"		100.0	120.0	100.0	120.0	100.0	120.0	80.6	80.6
24"	96"	100.0	210.0	100.0	210.0	100.0	210.0	100.0	172.0
30"		100.0	120.0	100.0	120.0	100.0	120.0	100.0	120.0
32"		100.0	120.0	100.0	120.0	100.0	120.0	100.0	118.9
36"		100.0	120.0	100.0	120.0	100.0	120.0	100.0	107.8
42"		100.0	120.0	100.0	120.0	100.0	120.0	90.8	90.8
48"		100.0	120.0	100.0	120.0	100.0	120.0	80.9	80.9
54"		100.0	120.0	100.0	112.6	100.0	120.0	73.2	73.2
24"	108"	100.0	210.0	100.0	210.0	100.0	210.0	100.0	151.2
30"		100.0	120.0	100.0	120.0	100.0	120.0	100.0	108.6
32"		100.0	120.0	100.0	120.0	100.0	120.0	100.0	100.8
36"		100.0	120.0	100.0	120.0	100.0	120.0	91.2	91.2
42"		100.0	120.0	100.0	120.0	100.0	120.0	80.0	80.0
48"		100.0	120.0	100.0	112.2	100.0	120.0	72.9	72.9
24"	120"	100.0	120.0	100.0	120.0	100.0	120.0	100.0	120.0
30"		100.0	120.0	100.0	120.0	100.0	120.0	96.4	96.4
32"		100.0	120.0	100.0	120.0	100.0	120.0	88.8	88.8
36"		100.0	120.0	100.0	120.0	100.0	120.0	80.6	80.6
42"		100.0	120.0	100.0	114.1	100.0	120.0	70.6	70.6

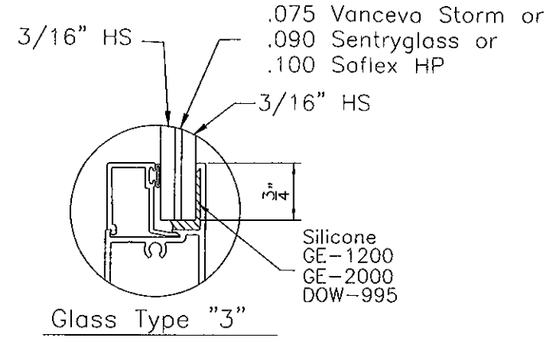

Glass Type "3"

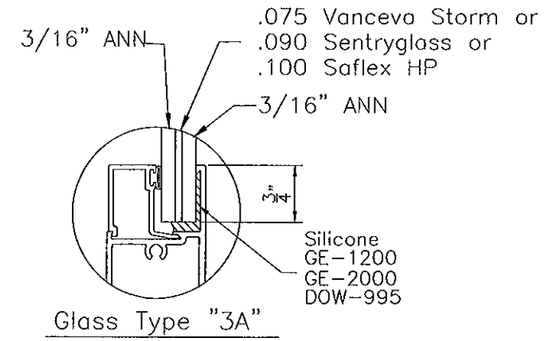

Glass Type "3A"

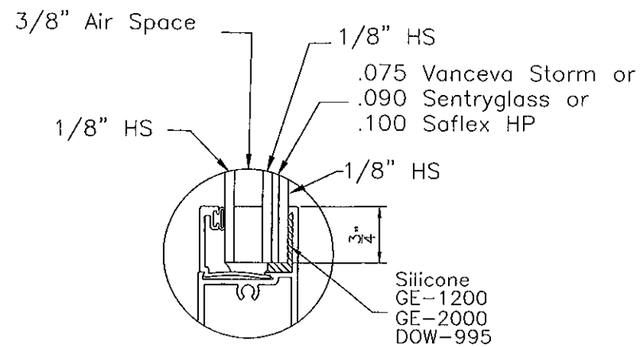

Glass Type "4"

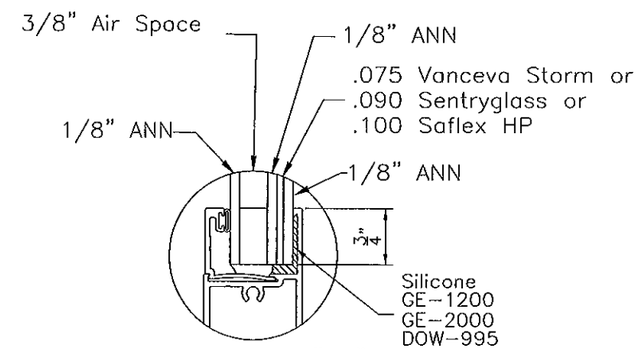

Glass Type "4A"

EQUAL LITES WINDOWS

DESIGN LOAD CAPACITY - PSF

WINDOW DIMS.		GLASS TYPE '3'		GLASS TYPE '3A'		GLASS TYPE '4'		GLASS TYPE '4A'	
WIDTH	HEIGHT	EXT.(+)	INT.(-)	EXT.(+)	INT.(-)	EXT.(+)	INT.(-)	EXT.(+)	INT.(-)
19-1/8"	26"	100.0	210.0	100.0	210.0	100.0	210.0	100.0	210.0
26-1/2"		100.0	210.0	100.0	210.0	100.0	210.0	100.0	210.0
37"		100.0	210.0	100.0	210.0	100.0	210.0	100.0	210.0
53-1/8"		100.0	210.0	100.0	210.0	100.0	210.0	100.0	210.0
19-1/8"	38-3/8"	100.0	210.0	100.0	210.0	100.0	210.0	100.0	210.0
26-1/2"		100.0	210.0	100.0	210.0	100.0	210.0	100.0	210.0
37"		100.0	210.0	100.0	210.0	100.0	210.0	100.0	210.0
53-1/8"		100.0	206.9	100.0	206.9	100.0	206.9	100.0	206.9
19-1/8"	50-5/8"	100.0	210.0	100.0	210.0	100.0	210.0	100.0	210.0
26-1/2"		100.0	210.0	100.0	210.0	100.0	210.0	100.0	210.0
37"		100.0	210.0	100.0	210.0	100.0	210.0	100.0	193.1
53-1/8"		100.0	168.7	100.0	168.7	100.0	168.7	100.0	131.7
19-1/8"	63"	100.0	210.0	100.0	210.0	100.0	210.0	100.0	210.0
26-1/2"		100.0	210.0	100.0	210.0	100.0	210.0	100.0	210.0
37"		100.0	210.0	100.0	191.9	100.0	210.0	100.0	177.6
53-1/8"		100.0	120.0	100.0	120.0	100.0	120.0	100.0	104.5
19-1/8"	72"	100.0	210.0	100.0	210.0	100.0	210.0	100.0	210.0
26-1/2"		100.0	210.0	100.0	210.0	100.0	210.0	100.0	192.9
37"		100.0	210.0	100.0	196.5	100.0	210.0	100.0	156.0
53-1/8"		100.0	120.0	100.0	120.0	100.0	120.0	94.6	94.6
19-1/8"	76"	100.0	210.0	100.0	210.0	100.0	210.0	100.0	210.0
26-1/2"		100.0	210.0	100.0	210.0	100.0	210.0	100.0	182.1
37"		100.0	210.0	100.0	194.8	100.0	210.0	100.0	145.1
53-1/8"		100.0	120.0	100.0	120.0	100.0	120.0	88.3	88.3

AIR SPACE CONSISTING OF:
SPACER:
METAL SPACER AROUND
THE PERIMETER OF THE GLASS.

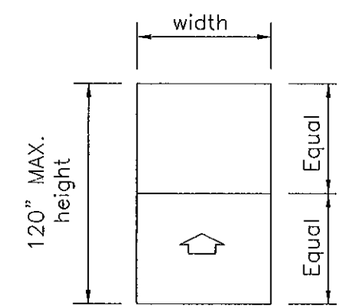

Equal Lite Window

All values shown are Design PSF (Pounds per Square Foot)

VALUES FOR EXTERIOR LOADS(+) SHOWN ARE
FOR SILL WITH WATERBAR ADAPTER
FOR WINDOWS WITHOUT WATERBAR ADAPTER
LIMIT EXTERIOR(+) LOADS TO 80.0 PSF

PRODUCT REVISED
as complying with the Florida
Building Code
Acceptance No 12-0221.14
Expiration Date 05/05/2015
By
Miami Dade Product Control

Engr: JAVAD AHMAD
CIVIL
FLA. PE # 70592
C.A.N. 3538

FEB 09 2012

AL-FAROOQ CORPORATION
ENGINEERS & PRODUCT DEVELOPMENT
1235 S.W. 87 AVE
MIAMI, FLORIDA 33174
TEL (305) 264-8100 FAX. (305) 262-6978

COMP-ANL\W005-04CGI

ALUMINUM SINGLE HUNG WINDOW (L.M.I.)

CGI WINDOWS & DOORS
10100 N.W. 25TH STREET
MIAMI, FL. 33172
TEL. (305) 593-6590 FAX. (305) 593-6592

revisions:

no	date	by	description
C	11.12.08		NEW SHEET ADDED
D	01.03.12		UPDATED TO 2010 FBC

date: 01-28-05
scale: -
dr. by: -
chk. by:

drawing no.
W05-04

sheet 3A of 10

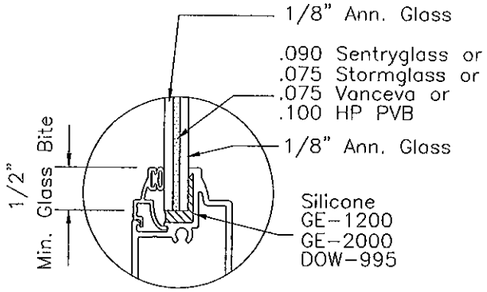

Glass Type "1"

5/16" Nominal Glass
Annealed/Annealed

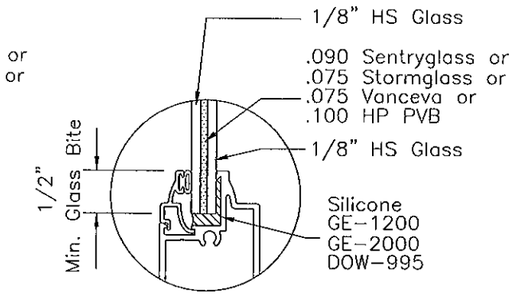

Glass Type "2"

5/16" Nominal Glass
HS/HS

Supplemental Test Results for:

Air Infiltration – Water Leakage Resistance – Forced Entry

Test Type and Method	Results
Air Infiltration Test (ASTM-E283)	
@ 1.57 psf pressure differential	PASSED (.044 C.F. / Min / Sq Ft)
@ 6.24 psf pressure differential	PASSED (.076 C.F. / Min / Sq Ft)
Water Leakage Test (ASTM-E331)	No leakage allowed
without waterbar adaptor	PASSED @ 12.0 PSF
with waterbar adaptor	PASSED @ 15.0 PSF
Forced Entry Resistance test (ASTM F588 & Grade 10)	PASSED

UNEQUAL LITES WINDOWS (ORIEL)

DESIGN LOAD CAPACITY – PSF

WINDOW DIMS.		TOP VENT	GLASS TYPE '1'		GLASS TYPE '2'	
WIDTH	HEIGHT	HEIGHT	EXT.(+)	INT.(-)	EXT.(+)	INT.(-)
24"	96" (MAX.)	48"	100.0	161.9	100.0	210.0
30"			100.0	118.8	100.0	120.0
32"			100.0	111.9	100.0	120.0
36"			100.0	101.5	100.0	120.0
42"			85.4	85.4	100.0	120.0
48"			76.2	76.2	100.0	120.0
54"			68.9	68.9	100.0	120.0
24"	108" (MAX.)	54"	100.0	142.4	100.0	210.0
30"			100.0	102.2	100.0	120.0
32"			94.9	94.9	100.0	120.0
36"			85.9	85.9	100.0	120.0
42"			75.3	75.3	100.0	120.0
48"			68.6	68.6	100.0	120.0
24"	120" (MAX.)	60"	100.0	120.0	100.0	120.0
30"			90.7	90.7	100.0	120.0
32"			83.6	83.6	100.0	120.0
36"			75.9	75.9	100.0	120.0
42"			66.4	66.4	100.0	120.0
24"	120" (MAX.)	66"	100.0	120.0	100.0	120.0
30"			81.7	81.7	100.0	120.0
32"			77.7	77.7	100.0	120.0
36"			67.4	67.4	100.0	120.0
24"	120" (MAX.)	72"	100.0	113.6	100.0	120.0
30"			77.1	77.1	100.0	120.0
32"			70.1	70.1	100.0	120.0
36"			60.3	60.3	100.0	120.0
24"	120" (MAX.)	78"	100.0	120.0	100.0	120.0
30"			71.2	71.2	100.0	120.0
32"			63.8	63.8	100.0	120.0
24"	120" (MAX.)	84"	100.0	120.0	100.0	120.0
30"			66.6	66.6	100.0	120.0

All values shown are Design PSF (Pounds per Square Foot)

UNEQUAL LITES WINDOWS (ORIEL)

DESIGN LOAD CAPACITY – PSF

WINDOW DIMS.		TOP VENT	GLASS TYPE '1'		GLASS TYPE '2'	
WIDTH	HEIGHT	HEIGHT	EXT.(+)	INT.(-)	EXT.(+)	INT.(-)
19-1/8"	96" (MAX.)	48"	100.0	210.0	100.0	210.0
26-1/2"			100.0	138.5	100.0	210.0
37"			99.3	99.3	100.0	120.0
53-1/8"			69.8	69.8	100.0	120.0
19-1/8"	108" (MAX.)	54"	100.0	210.0	100.0	210.0
26-1/2"			100.0	120.0	100.0	120.0
37"			83.6	83.6	100.0	120.0
19-1/8"	120" (MAX.)	60"	100.0	210.0	100.0	210.0
26-1/2"			100.0	108.6	100.0	120.0
37"			73.7	73.7	100.0	120.0
19-1/8"	120" (MAX.)	66"	100.0	210.0	100.0	210.0
26-1/2"			99.5	99.5	100.0	120.0
37"			65.7	65.7	100.0	120.0
19-1/8"	120" (MAX.)	72"	100.0	210.0	100.0	210.0
26-1/2"			93.9	93.9	100.0	120.0
19-1/8"	120" (MAX.)	78"	100.0	120.0	100.0	120.0
26-1/2"			88.0	88.0	100.0	120.0
19-1/8"	120" (MAX.)	84"	100.0	120.0	100.0	120.0
26-1/2"			79.8	79.8	100.0	120.0

NOTE:
GLASS CAPACITIES ON THIS SHEET ARE
BASED ON ASTM E1300-04 (3 SEC. GUSTS)
AND FLORIDA BUILDING COMMISSION
DECLARATORY STATEMENT DCA05-DEC-219

VALUES FOR EXTERIOR LOADS(+) SHOWN ARE
FOR SILL WITH WATERBAR ADAPTER
FOR WINDOWS WITHOUT WATERBAR ADAPTER
LIMIT EXTERIOR(+) LOADS TO 80.0 PSF

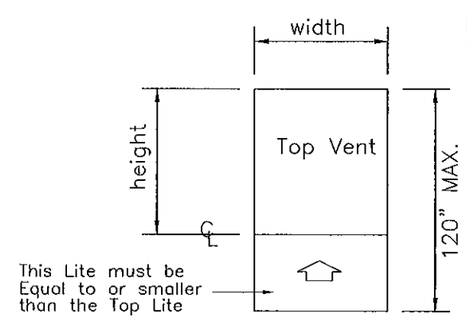

Unequal Lite Window

PRODUCT REVISED
as complying with the Florida
Building Code
Acceptance No 12-0221.14
Expiration Date 05/05/2015
By
Miami Dade Proc

Engr: JAVAD AHMAD
CIVIL
FLA. PE # 70592
C.A.N. 3538

FEB 09 2012

AL-FAROOQ CORPORATION
ENGINEERS & PRODUCT DEVELOPMENT
1235 S.W. 87 AVE
MIAMI, FLORIDA 33174
TEL. (305) 264-8100 FAX. (305) 262-6978

COMP-ANL\W005-04CGI

ALUMINUM SINGLE HUNG WINDOW (L.M.I.)

CGI WINDOWS & DOORS
10100 N.W. 25TH STREET
MIAMI, FL. 33172
TEL. (305) 593-6590 FAX. (305) 593-6592

revisions:

no	date	by	description
A	07.02.08		UPDATED FOR 2007 FBC
B	08.07.08		NO CHANGE THIS SHEET
C	11.12.08		NO CHANGE THIS SHEET
D	01.03.12		UPDATED TO 2010 FBC

date: 01-28-05
scale: -
dr. by: -
chk. by:

drawing no.
W05-04

NOTE:
GLASS CAPACITIES ON THIS SHEET ARE
BASED ON ASTM E1300-04 (3 SEC. GUSTS)
AND FLORIDA BUILDING COMMISSION
DECLARATORY STATEMENT DCA05-DEC-219

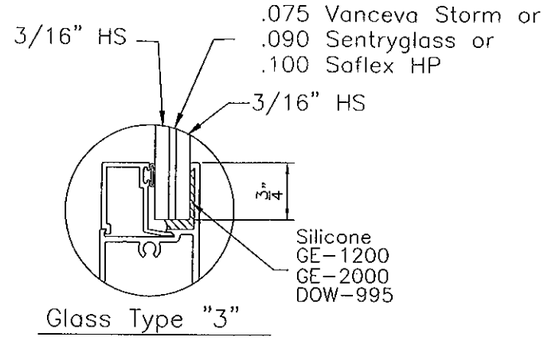

Glass Type "3"

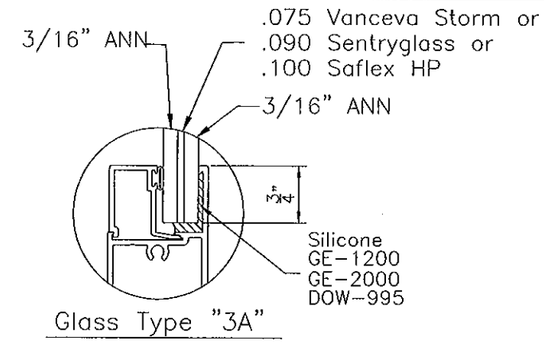

Glass Type "3A"

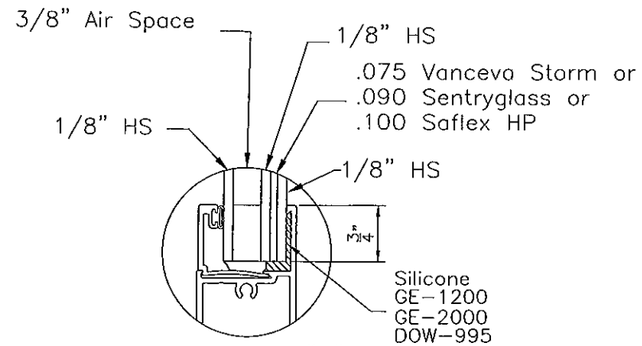

Glass Type "4"

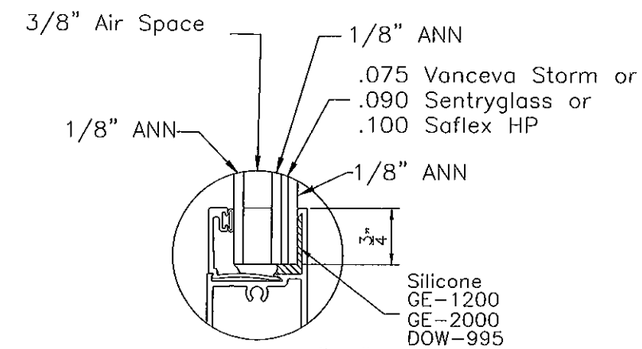

Glass Type "4A"

UNEQUAL LITES WINDOWS (ORIEL)

DESIGN LOAD CAPACITY - PSF

WINDOW DIMS.		TOP VENT	GLASS TYPE '3'		GLASS TYPE '3A'		GLASS TYPE '4'		GLASS TYPE '4A'	
WIDTH	HEIGHT	HEIGHT	EXT.(+)	INT.(-)	EXT.(+)	INT.(-)	EXT.(+)	INT.(-)	EXT.(+)	INT.(-)
24"	96" (MAX.)	48"	100.0	210.0	100.0	210.0	100.0	210.0	100.0	172.0
30"			100.0	120.0	100.0	120.0	100.0	120.0	100.0	120.0
32"			100.0	120.0	100.0	120.0	100.0	120.0	100.0	118.9
36"			100.0	120.0	100.0	120.0	100.0	120.0	100.0	107.8
42"			100.0	120.0	100.0	120.0	100.0	120.0	90.8	90.8
48"			100.0	120.0	100.0	120.0	100.0	120.0	80.9	80.9
54"			100.0	120.0	100.0	112.6	100.0	120.0	73.2	73.2
24"	108" (MAX.)	54"	100.0	210.0	100.0	210.0	100.0	210.0	100.0	151.2
30"			100.0	120.0	100.0	120.0	100.0	120.0	100.0	108.6
32"			100.0	120.0	100.0	120.0	100.0	120.0	100.0	100.8
36"			100.0	120.0	100.0	120.0	100.0	120.0	91.2	91.2
42"			100.0	120.0	100.0	120.0	100.0	120.0	80.0	80.0
48"			100.0	120.0	100.0	112.2	100.0	120.0	72.9	72.9
24"	120" (MAX.)	60"	100.0	120.0	100.0	120.0	100.0	120.0	100.0	120.0
30"			100.0	120.0	100.0	120.0	100.0	120.0	96.4	96.4
32"			100.0	120.0	100.0	120.0	100.0	120.0	88.8	88.8
36"			100.0	120.0	100.0	120.0	100.0	120.0	80.6	80.6
42"			100.0	120.0	100.0	114.1	100.0	120.0	70.6	70.6
24"	120" (MAX.)	66"	100.0	120.0	100.0	120.0	100.0	120.0	100.0	120.0
30"			100.0	120.0	100.0	120.0	100.0	120.0	86.8	86.8
32"			100.0	120.0	100.0	120.0	100.0	120.0	82.6	82.6
36"			100.0	120.0	100.0	120.0	100.0	120.0	71.6	71.6
24"	120" (MAX.)	72"	100.0	120.0	100.0	120.0	100.0	120.0	100.0	120.0
30"			100.0	120.0	100.0	120.0	100.0	120.0	81.9	81.9
32"			100.0	120.0	100.0	120.0	100.0	120.0	74.5	74.5
36"			100.0	120.0	100.0	120.0	100.0	115.2	64.0	64.0
24"	120" (MAX.)	78"	100.0	120.0	100.0	120.0	100.0	120.0	100.0	120.0
30"			100.0	120.0	100.0	120.0	100.0	120.0	75.6	75.6
32"			100.0	120.0	100.0	120.0	100.0	120.0	67.8	67.8
24"	120" (MAX.)	84"	100.0	120.0	100.0	120.0	100.0	120.0	100.0	120.0
30"			100.0	120.0	100.0	120.0	100.0	120.0	70.7	70.7

UNEQUAL LITES WINDOWS (ORIEL)

DESIGN LOAD CAPACITY - PSF

WINDOW DIMS.		TOP VENT	GLASS TYPE '3'		GLASS TYPE '3A'		GLASS TYPE '4'		GLASS TYPE '4A'	
WIDTH	HEIGHT	HEIGHT	EXT.(+)	INT.(-)	EXT.(+)	INT.(-)	EXT.(+)	INT.(-)	EXT.(+)	INT.(-)
19-1/8"	96" (MAX.)	48"	100.0	210.0	100.0	210.0	100.0	210.0	100.0	210.0
26-1/2"			100.0	210.0	100.0	210.0	100.0	210.0	100.0	147.1
37"			100.0	120.0	100.0	120.0	100.0	120.0	100.0	105.5
53-1/8"			100.0	120.0	100.0	114.4	100.0	120.0	74.2	74.2
19-1/8"	108" (MAX.)	54"	100.0	210.0	100.0	210.0	100.0	210.0	100.0	210.0
26-1/2"			100.0	120.0	100.0	120.0	100.0	120.0	100.0	120.0
37"			100.0	120.0	100.0	120.0	100.0	120.0	88.8	88.8
19-1/8"	120" (MAX.)	60"	100.0	210.0	100.0	204.2	100.0	210.0	100.0	210.0
26-1/2"			100.0	120.0	100.0	120.0	100.0	120.0	100.0	115.4
37"			100.0	120.0	100.0	120.0	100.0	120.0	78.3	78.3
19-1/8"	120" (MAX.)	66"	100.0	210.0	100.0	210.0	100.0	210.0	100.0	210.0
26-1/2"			100.0	120.0	100.0	120.0	100.0	120.0	100.0	105.7
37"			100.0	120.0	100.0	120.0	100.0	120.0	69.8	69.8
19-1/8"	120" (MAX.)	72"	100.0	210.0	100.0	210.0	100.0	210.0	100.0	210.0
26-1/2"			100.0	120.0	100.0	120.0	100.0	120.0	99.8	99.8
19-1/8"	120" (MAX.)	78"	100.0	210.0	100.0	210.0	100.0	210.0	100.0	203.3
26-1/2"			100.0	120.0	100.0	120.0	100.0	120.0	93.5	93.5
19-1/8"	120" (MAX.)	84"	100.0	210.0	100.0	210.0	100.0	210.0	100.0	163.5
26-1/2"			100.0	120.0	100.0	120.0	100.0	120.0	84.8	84.8

AIR SPACE CONSISTING OF:
SPACER:
METAL SPACER AROUND
THE PERIMETER OF THE GLASS.

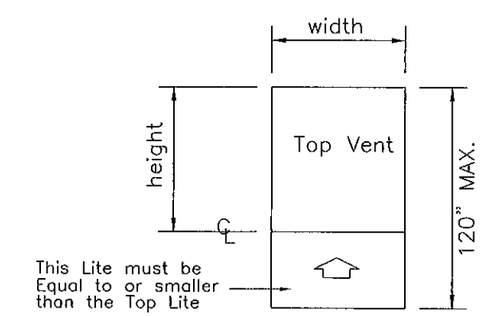

Unequal Lite Window

PRODUCT REVISED
as complying with the Florida
Building Code
Acceptance No 12-0221.14
Expiration Date 03/05/2015
By
Miami Dade Product Control

All values shown are Design PSF (Pounds per Square Foot)

VALUES FOR EXTERIOR LOADS(+) SHOWN ARE
FOR SILL WITH WATERBAR ADAPTER
FOR WINDOWS WITHOUT WATERBAR ADAPTER
LIMIT EXTERIOR(+) LOADS TO 80.0 PSF

Engr: JAVAD AHMAD
CIVIL
FLA. PE # 70592
C.A.N. 3538
FEB 09 2012

AL-FAROOQ CORPORATION
ENGINEERS & PRODUCT DEVELOPMENT
1235 S.W. 87 AVE
MIAMI, FLORIDA 33174
TEL. (305) 264-8100 FAX. (305) 262-6978
COMP-ANL\W005-04CGI

ALUMINUM SINGLE HUNG WINDOW (L.M.I.)

CGI WINDOWS & DOORS
10100 N.W. 25TH STREET
MIAMI, FL. 33172
TEL. (305) 593-6590 FAX. (305) 593-6592

revisions:			
no	date	by	description
C	11.12.08		NEW SHEET ADDED
D	01.03.12		UPDATED TO 2010 FBC

date: 01-28-05
scale: -
dr. by: -
chk. by:

drawing no.
W05-04

Installation Type "A"

w/ 1 x 4 Beveled P.T. Wood Buck

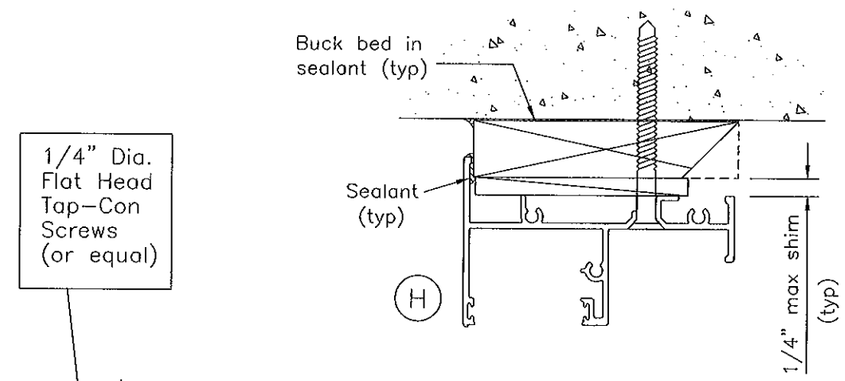

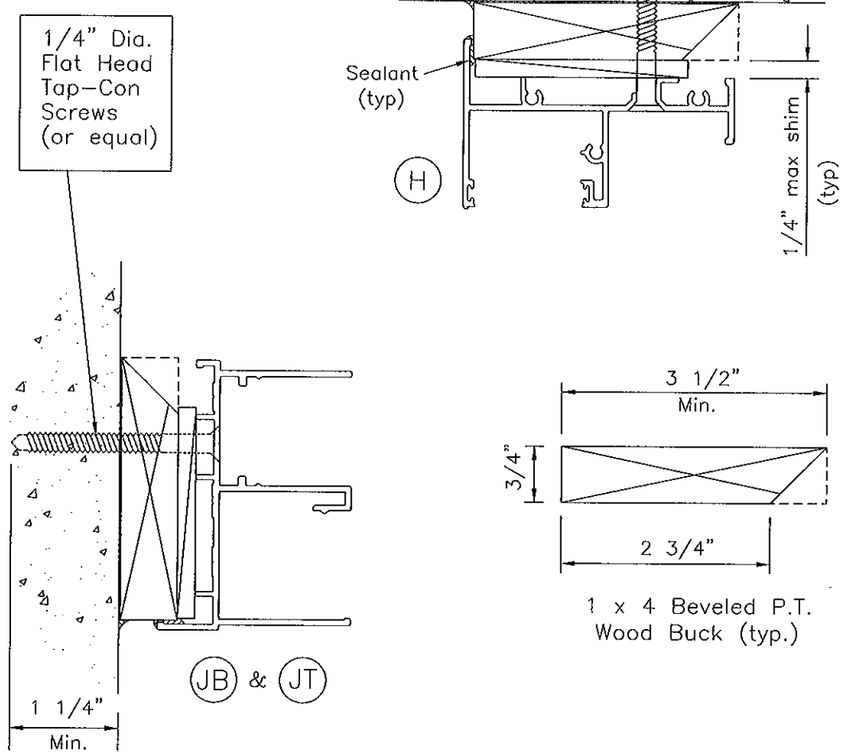

IMPORTANT NOTE:

Wood Bucks must sustain loads imposed by glazing system and transfer them to the building structure.

TYPICAL ANCHORS: SEE ELEV. FOR SPACING

1/4" DIA. ULTRACON BY 'ELCO' (Fu=177 KSI, Fy=155 KSI)

1/4" DIA. HILTI KWIK-CON II (Fu=163 KSI, Fy=157 KSI)

INTO 2BY WOOD BUCKS OR WOOD STRUCTURES
1-1/2" MIN. PENETRATION INTO WOOD

THRU 1BY BUCKS INTO CONC. OR MASONRY
1-1/4" MIN. EMBED INTO CONC. OR MASONRY

DIRECTLY INTO CONC. OR MASONRY
1-3/8" MIN. EMBED INTO CONC. OR MASONRY

1/4" DIA. SELF DRILLING SCREWS (GRADE 2 CRS)
INTO METAL STRUCTURES

STEEL : 12 GA. MIN. (Fy = 36 KSI MIN.)
ALUMINUM : 1/8" THK. MIN. (6063-T5 MIN.)
(STEEL IN CONTACT WITH ALUMINUM TO BE PLATED OR PAINTED)

#14 SMS OR SELF DRILLING SCREWS

INTO MIAMI-DADE COUNTY APPROVED MULLIONS (MIN. THK. = .090")
(NO SHIM SPACE)

TYPICAL EDGE DISTANCE

INTO CONCRETE AND MASONRY = 2-1/2" MIN.
INTO WOOD STRUCTURE = 1" MIN.
INTO METAL STRUCTURE = 3/4" MIN.

CONCRETE AT HEAD, SILL OR JAMBS f'c = 3000 PSI MIN.
C-90 HOLLOW/FILLED BLOCK AT JAMBS f'm = 2000 PSI MIN.

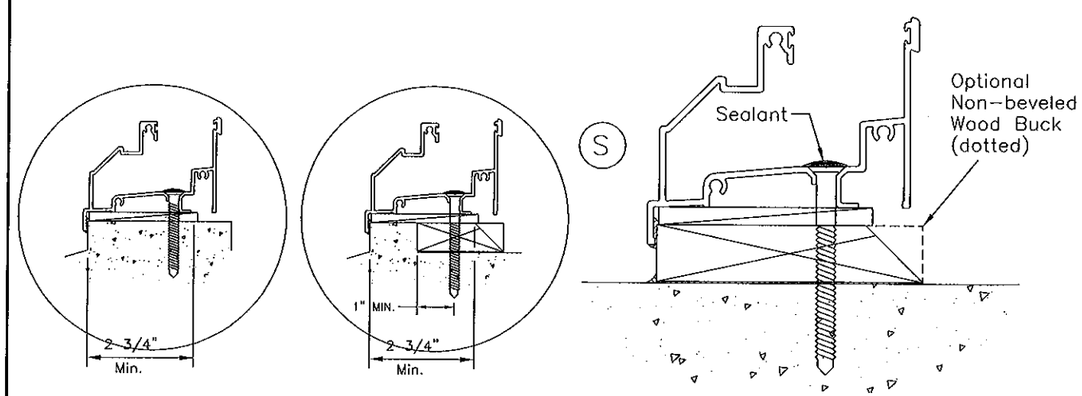

Optional Pre-Cast Sill

Values for Installation Type "A" apply to the following installation types, with maximum shim space 1/4":

1- Using 1by P.T. wood bucks, min. 5/8" thick,

2- Directly into masonry, without the use of wood bucks.

3- Directly into a steel or aluminum structure min. 1/8" thick and using #14 Teks or SMS. Structure must be designed by others to sustain the loads imposed by the window.

PRODUCT REVISED
as complying with the Florida Building Code
Acceptance No 12-0221.14
Expiration Date 05/05/2015
By
Miami Dade Product Control

Engr: JAVAD AHMAD
CIVIL
FLA. PE # 70592
C.A.N. 3538

FEB 09 2012

AL-FAROOQ CORPORATION
ENGINEERS & PRODUCT DEVELOPMENT
1235 S.W. 87 AVE
MIAMI, FLORIDA 33174
TEL. (305) 264-8100 FAX. (305) 262-6978
COMP-ANL\W005-04CGI

ALUMINUM SINGLE HUNG WINDOW (L.M.I.)

CGI WINDOWS & DOORS
10100 N.W. 25TH STREET
MIAMI, FL. 33172
TEL. (305) 593-6590 FAX. (305) 593-6592

revisions:

no.	date	by	description
A	07.02.08		UPDATED FOR 2007 FBC
B	08.07.08		NO CHANGE THIS SHEET
C	11.12.08		NO CHANGE THIS SHEET
D	01.03.12		NO CHANGE THIS SHEET

date: 01-28-05
scale: -
dr. by: -
chk. by:

drawing no.
W05-04

Installation Type "B"

w/ 2 x 4 Beveled P.T. Wood Buck

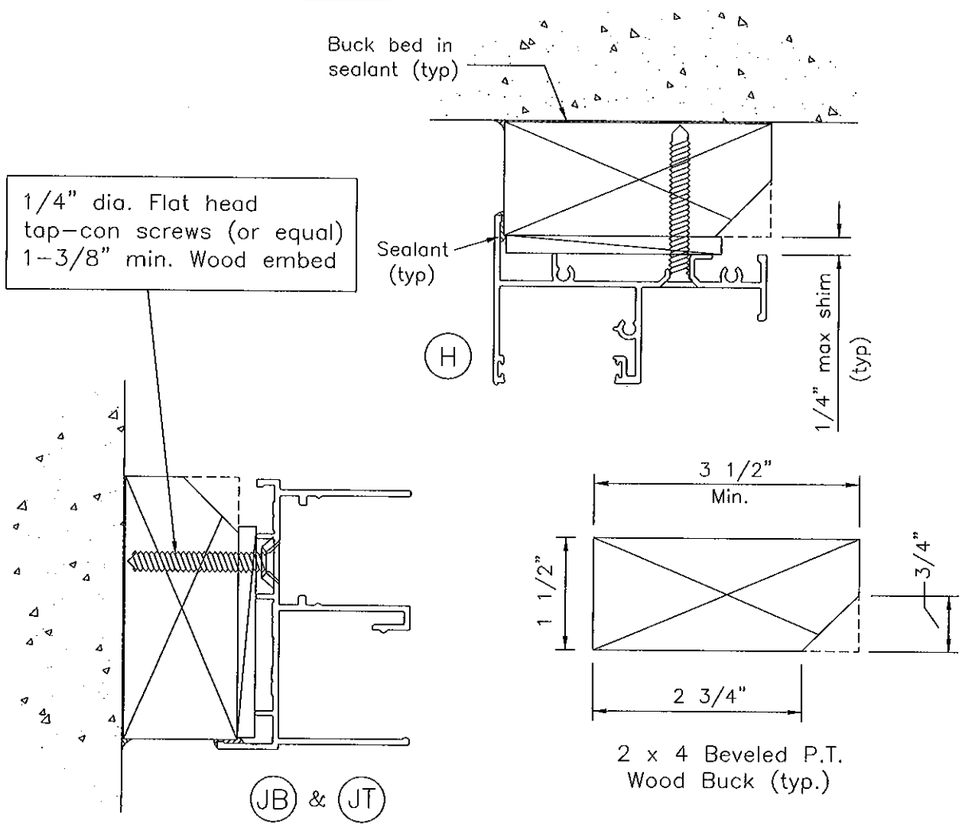

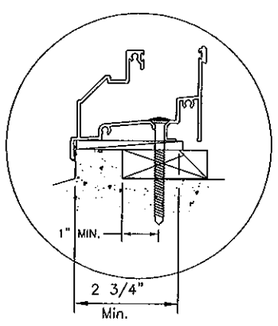

Optional Pre-Cast Sill

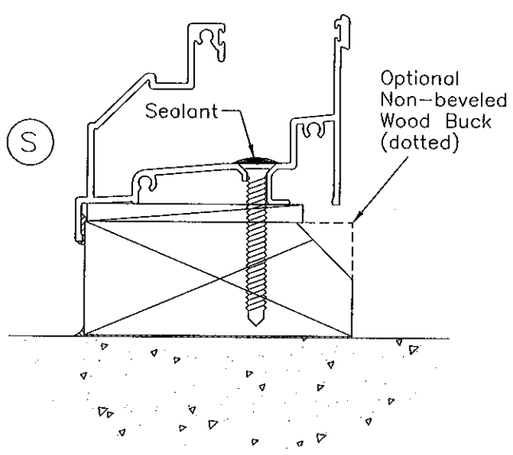

Installation Type "C"

based on wood penetration only using 1 x 4 or 2 x 4 wood bucks

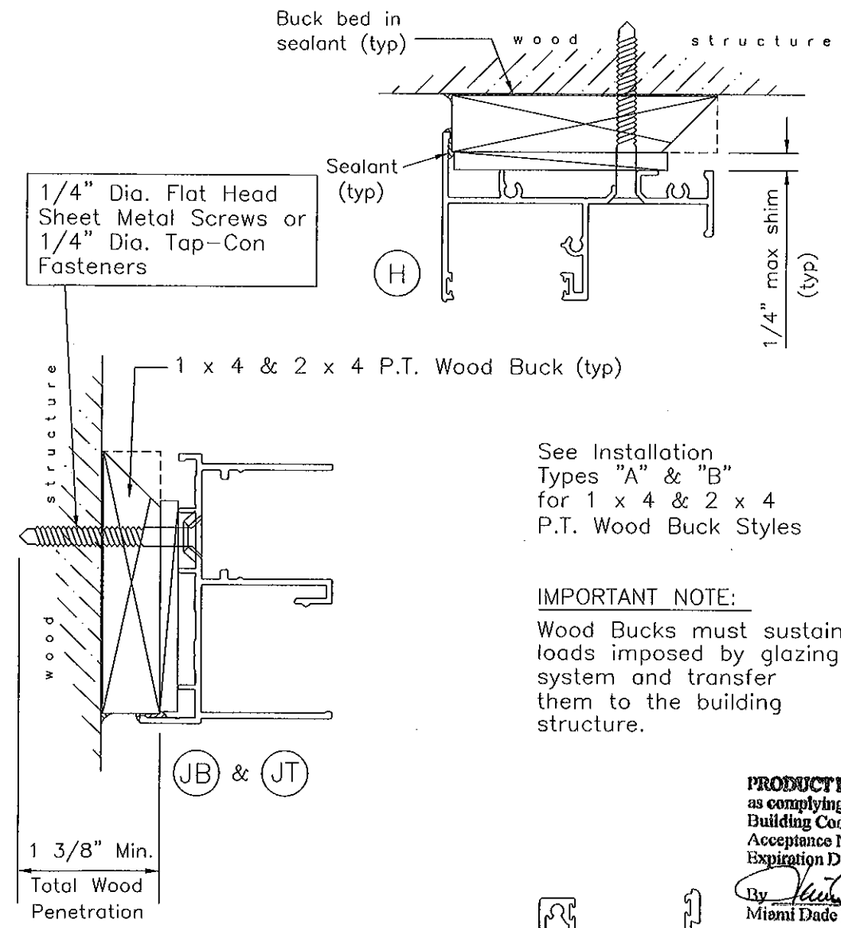

See Installation Types "A" & "B" for 1 x 4 & 2 x 4 P.T. Wood Buck Styles

IMPORTANT NOTE:

Wood Bucks must sustain loads imposed by glazing system and transfer them to the building structure.

PRODUCT REVISED
as complying with the Florida Building Code
Acceptance No 12-0221.14
Expiration Date 05/05/2015
By
Miami Dade Product Control

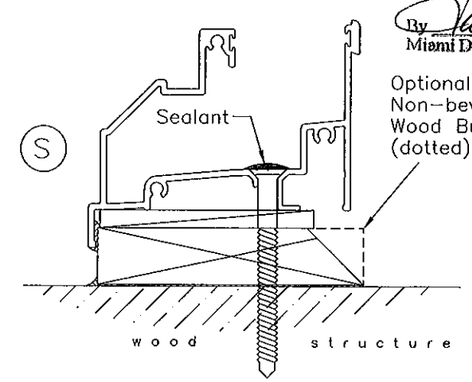

Engr: JAVAD AHMAD
CIVIL
FLA. PE # 70592
C.A.N. 3538

FEB 09 2012

AL-FAROOQ CORPORATION
ENGINEERS & PRODUCT DEVELOPMENT
1235 S.W. 87 AVE
MIAMI, FLORIDA 33174
TEL. (305) 264-8100 FAX. (305) 262-6978

COMP-ANL\W005-04CGI

ALUMINUM SINGLE HUNG WINDOW (L.M.I.)

CGI WINDOWS & DOORS
10100 N.W. 25TH STREET
MIAMI, FL. 33172
TEL. (305) 593-6590 FAX. (305) 593-6592

revisions:

no	date	by	description
A	07.02.08		UPDATED FOR 2007 FBC
B	08.07.08		REV. PER BCCO COMMENTS
C	11.12.08		NO CHANGE THIS SHEET
D	01.03.12		NO CHANGE THIS SHEET

date: 01-28-05
scale: -
dr. by: -
chk. by:

drawing no.
W05-04

ANCHORS

DESIGN LOAD CAPACITY – PSF

WINDOW DIMS. WIDTH	WINDOW DIMS. HEIGHT	NO. OF ANCHORS AT JAMB	STD. HOLE PATTERN W/O ADDL. ANCHOR EXT.(+) & INT.(–)	STD. HOLE PATTERN WITH ADDL. ANCHOR EXT.(+) & INT.(–)
24"	48"	4	210.0	210.0
30"			210.0	210.0
32"			210.0	210.0
36"			210.0	210.0
42"			201.8	210.0
48"			175.7	210.0
54"			147.2	206.4
24"	60"	4	210.0	210.0
30"			193.7	210.0
32"			185.5	210.0
36"			170.9	210.0
42"			152.9	191.2
48"			138.4	173.0
54"			126.3	157.9
24"	72"	6	210.0	210.0
30"			210.0	210.0
32"			210.0	210.0
36"			201.8	210.0
42"			181.6	210.0
48"			145.3	192.6
54"			117.2	175.7
24"	84"	6	210.0	210.0
30"			189.5	210.0
32"			180.3	210.0
36"			165.1	192.6
42"			148.2	173.0
48"			135.4	157.9
54"			111.2	145.3
24"	96"	6	194.6	210.0
30"			161.4	188.3
32"			153.2	178.8
36"			139.7	163.0
42"			124.5	145.3
48"			113.5	132.4
54"			104.8	122.2
24"	108"	8	210.0	210.0
30"			187.5	210.0
32"			177.7	199.9
36"			161.4	181.6
42"			143.1	161.0
48"			129.7	145.9
24"	120"	8	201.8	210.0
30"			166.0	186.8
32"			157.2	176.8
36"			142.4	160.2
42"			125.8	141.5

ANCHORS

DESIGN LOAD CAPACITY – PSF

WINDOW DIMS. WIDTH	WINDOW DIMS. HEIGHT	NO. OF ANCHORS AT JAMB	STD. HOLE PATTERN W/O ADDL. ANCHOR EXT.(+) & INT.(–)	STD. HOLE PATTERN WITH ADDL. ANCHOR EXT.(+) & INT.(–)
19-1/8"	26"	4	210.0	210.0
26-1/2"			210.0	210.0
37"			210.0	210.0
53-1/8"			210.0	210.0
19-1/8"	38-3/8"	4	210.0	210.0
26-1/2"			210.0	210.0
37"			210.0	210.0
53-1/8"			176.9	210.0
19-1/8"	50-5/8"	4	210.0	210.0
26-1/2"			210.0	210.0
37"			208.1	210.0
53-1/8"			145.6	196.3
19-1/8"	63"	4	210.0	210.0
26-1/2"			198.4	210.0
37"			157.4	196.7
53-1/8"			120.5	150.7
19-1/8"	72"	6	210.0	210.0
26-1/2"			210.0	210.0
37"			198.1	210.0
53-1/8"			120.6	178.7
19-1/8"	76"	6	210.0	210.0
26-1/2"			210.0	210.0
37"			184.4	210.0
53-1/8"			118.2	166.9

LOADS APPLY TO INSTALLATION TYPES A, B & C AND INTO ALUMINUM BUCKS FOR ALUMINUM BUCK INSTALLATION SEE SHEETS 9 AND 10.

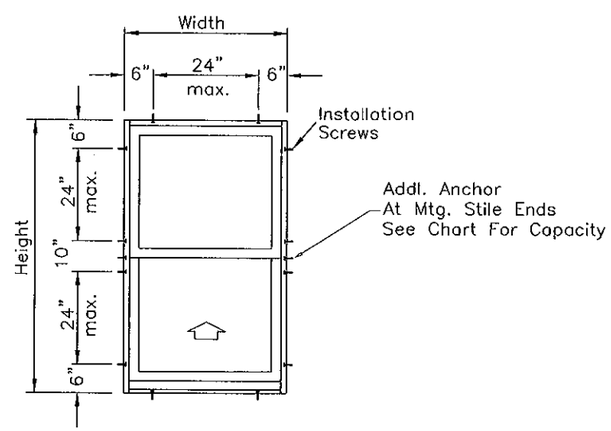

CGI Standard Hole Pattern

Refer to sheets 5 & 6 of 10 for description of installation types A – B – C

Engr: JAVAD AHMAD
CIVIL
FLA. PE # 70592
C.A.N. 3538

FEB 09 2012

PRODUCT REVISED
is complying with the Florida
Building Code
Acceptance No 12-0221.14
Expiration Date 05/05/2015
By
Miami Dade Product Control

AL-FAROOQ CORPORATION
ENGINEERS & PRODUCT DEVELOPMENT
1235 S.W. 87 AVE
MIAMI, FLORIDA 33174
TEL. (305) 264-8100 FAX. (305) 262-6978

COMP-ANL\W005-04CGI

ALUMINUM SINGLE HUNG WINDOW (L.M.I.)

CGI WINDOWS & DOORS
10100 N.W. 25TH STREET
MIAMI, FL. 33172
TEL. (305) 593-6590 FAX. (305) 593-6592

revisions:

no	date	by	description
A	07.02.08		UPDATED FOR 2007 FBC
B	08.07.08		REV. PER BCCO COMMENTS
C	11.12.08		NO CHANGE THIS SHEET
D	01.03.12		CHART REV.

date: 01-28-05
scale: –
dr. by: –
chk. by:

drawing no.
W05-04

Vertical Mullion Performance

$$\text{Tributary Width} = \frac{W1 + W2}{2}$$

For Window Performance, refer to sheets 3 or 4

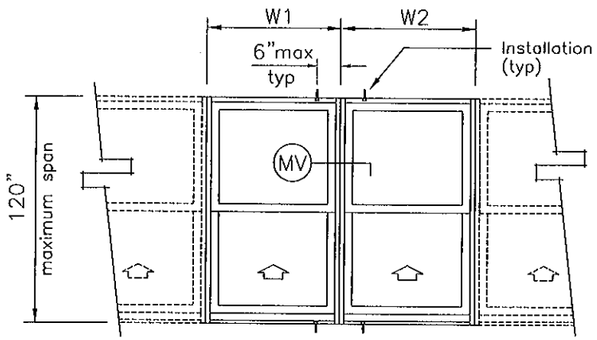

Multiple Opening
(2 or more windows)
w/ 1 screw on each side of mullion
Standard Installation

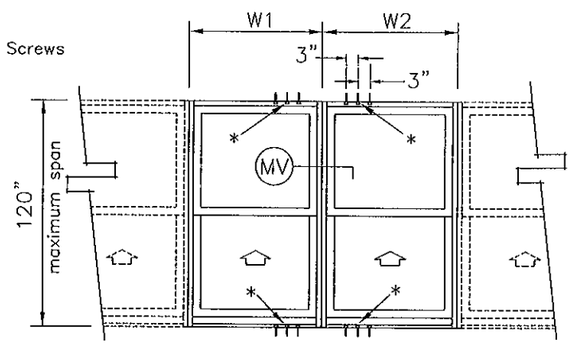

Multiple Opening
(2 or more windows)
w/ 2 or 3 screws on each side of mullion
High Load Installation

(* = additional holes to be drilled by installer)

Horizontal Mullion Performance

For Window Performance, refer to sheets 3 or 4

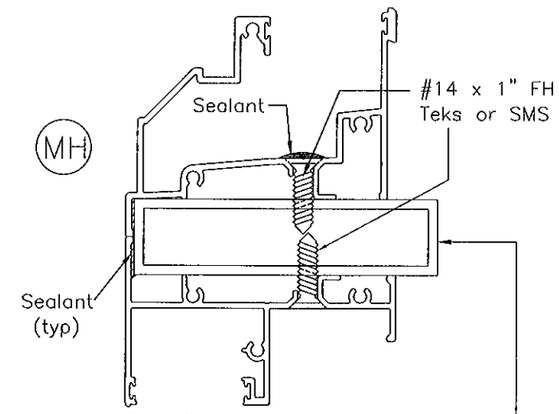

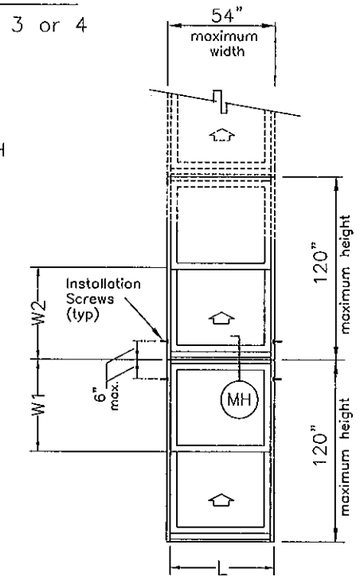

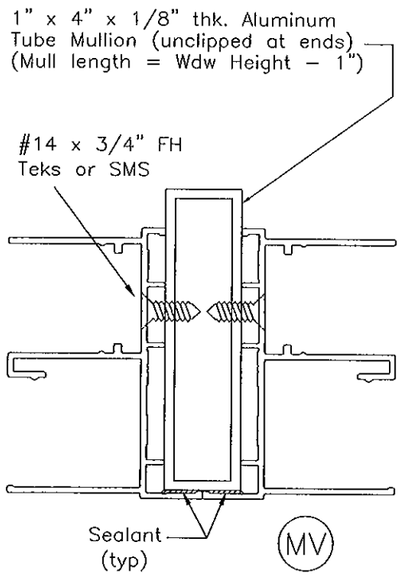

MULLION DESIGN LOAD CAPACITY – PSF				
WINDOW DIMS.		ONE ANCHOR EACH SIDE	TWO ANCHORS EACH SIDE	THREE ANCHORS EACH SIDE
WIDTH	HEIGHT	EXT.(+) & INT.(–)	EXT.(+) & INT.(–)	EXT.(+) & INT.(–)
24"	48"	150.0	210.0	210.0
30"		130.9	210.0	210.0
32"		126.6	210.0	210.0
36"		120.0	210.0	210.0
42"		114.5	210.0	210.0
48"		112.5	210.0	210.0
54"		112.5	210.0	210.0
24"	60"	112.5	210.0	210.0
30"		96.0	192.0	210.0
32"		92.0	184.1	210.0
36"		85.7	171.4	210.0
42"		79.1	158.2	210.0
48"		75.0	150.0	210.0
54"		72.7	145.5	210.0
24"	72"	90.0	180.0	210.0
30"		75.8	151.6	210.0
32"		72.3	144.6	210.0
36"		66.7	133.3	200.0
42"		60.5	121.0	181.5
48"		56.3	112.5	168.8
54"		53.3	106.7	160.0
24"	84"	75.0	150.0	210.0
30"		62.6	125.2	172.5
32"		59.6	119.1	162.9
36"		54.5	109.1	147.1
42"		49.0	98.0	129.7
48"		45.0	90.0	117.4
54"		42.1	84.2	108.4

MULLION DESIGN LOAD CAPACITY – PSF				
WINDOW DIMS.		ONE ANCHOR EACH SIDE	TWO ANCHORS EACH SIDE	THREE ANCHORS EACH SIDE
WIDTH	HEIGHT	EXT.(+) & INT.(–)	EXT.(+) & INT.(–)	EXT.(+) & INT.(–)
24"	96"	64.3	128.6	140.7
30"		53.3	106.7	114.1
32"		50.6	101.2	107.6
36"		46.2	92.3	96.8
42"		41.1	82.3	84.8
48"		37.5	75.0	76.1
54"		34.8	69.6	69.6
24"	108"	56.3	98.3	98.3
30"		46.5	79.5	79.5
32"		44.0	74.9	74.9
36"		40.0	67.2	67.2
42"		35.5	58.5	58.5
48"		32.1	52.2	52.2
24"	120"	50.0	71.4	71.4
30"		41.1	57.6	57.6
32"		38.9	54.2	54.2
36"		35.3	48.5	48.5
42"		31.2	42.2	42.2

MULLION DESIGN LOAD CAPACITY – PSF				
WINDOW DIMS.		ONE ANCHOR EACH SIDE	TWO ANCHORS EACH SIDE	THREE ANCHORS EACH SIDE
WIDTH	HEIGHT	EXT.(+) & INT.(–)	EXT.(+) & INT.(–)	EXT.(+) & INT.(–)
53–1/8"	26"	210.0	210.0	210.0
19–1/8"	38–3/8"	210.0	210.0	210.0
26–1/2"		194.6	210.0	210.0
37"		176.2	210.0	210.0
53–1/8"		176.0	210.0	210.0
19–1/8"	50–5/8"	165.0	210.0	210.0
26–1/2"		130.9	210.0	210.0
37"		109.0	210.0	210.0
53–1/8"		101.1	202.3	210.0
19–1/8"	63"	126.8	210.0	210.0
26–1/2"		98.3	196.6	210.0
37"		78.7	157.4	210.0
53–1/8"		67.0	133.9	200.9
19–1/8"	72"	108.5	210.0	210.0
26–1/2"		83.2	166.5	210.0
37"		65.5	130.9	196.4
53–1/8"		53.7	107.4	161.1
19–1/8"	76"	102.0	204.0	210.0
26–1/2"		77.9	155.9	210.0
37"		60.9	121.8	182.7
53–1/8"		49.3	98.7	148.0

Engr: JAVAD AHMAD
CIVIL
FLA. PE # 70592
C.A.N. 3538

FEB 09 2012

PRODUCT REVISED
as complying with the Florida
Building Code
Acceptance No 12-0221.14
Expiration Date 03/05/2015
By
Miami Dade Product Control

AL-FAROOQ CORPORATION
ENGINEERS & PRODUCT DEVELOPMENT
1235 S.W. 87 AVE
MIAMI, FLORIDA 33174
TEL. (305) 264-8100 FAX. (305) 262-6978

COMP–ANL\W005–04CGI

ALUMINUM SINGLE HUNG WINDOW (L.M.I.)

CGI WINDOWS & DOORS
10100 N.W. 25TH STREET
MIAMI, FL. 33172
TEL. (305) 593–6590 FAX. (305) 593–6592

revisions:

no	date	by	description
A	07.02.08		UPDATED FOR 2007 FBC
B	08.07.08		NO CHANGE THIS SHEET
C	11.12.08		NO CHANGE THIS SHEET
D	01.03.12		NO CHANGE THIS SHEET

date: 01–28–05
scale: –
dr. by: –
chk. by:

drawing no.
W05–04

PERFORMANCE VALUES OF ALUMINUM BUCK INSTALLATION ANCHORS

EXT.(+) & INT.(−)

WINDOW DIMS.		ANCHOR SPACING INTO CONC.		ANCHOR SPACING INTO HOLLOW BLOCK		ANCHOR SPACING INTO WOOD	
WIDTH	HEIGHT	16" O.C.	8" O.C.	16" O.C.	8" O.C.	16" O.C.	8" O.C.
24"	48"	210.0	210.0	178.7	210.0	210.0	210.0
30"		210.0	210.0	155.9	210.0	210.0	210.0
32"		210.0	210.0	150.8	210.0	210.0	210.0
36"		210.0	210.0	142.9	210.0	210.0	210.0
42"		205.7	210.0	131.3	204.2	176.3	210.0
48"		205.7	210.0	131.3	201.0	180.0	210.0
54"		168.0	210.0	107.2	187.6	144.0	210.0
24"	60"	210.0	210.0	134.0	210.0	210.0	210.0
30"		179.2	210.0	114.3	200.1	210.0	210.0
32"		171.8	210.0	109.6	191.9	210.0	210.0
36"		160.0	210.0	102.1	178.7	210.0	210.0
42"		147.7	210.0	94.2	164.9	176.3	210.0
48"		140.0	210.0	89.3	156.3	180.0	210.0
54"		135.8	210.0	86.6	151.6	142.2	210.0
24"	72"	210.0	210.0	134.0	210.0	210.0	210.0
30"		176.8	210.0	112.8	203.1	210.0	210.0
32"		168.8	210.0	107.7	193.8	210.0	210.0
36"		155.6	210.0	99.3	178.7	210.0	210.0
42"		141.2	210.0	90.1	162.2	176.3	210.0
48"		131.3	210.0	83.8	150.8	180.0	210.0
54"		124.4	210.0	79.4	142.9	142.2	210.0
24"	84"	210.0	210.0	134.0	210.0	210.0	210.0
30"		175.3	210.0	111.9	186.4	210.0	210.0
32"		166.8	210.0	106.4	177.4	210.0	210.0
36"		152.7	210.0	97.5	162.4	210.0	210.0
42"		137.1	210.0	87.5	145.9	176.3	210.0
48"		126.0	210.0	80.4	134.0	180.0	210.0
54"		117.9	196.5	75.2	125.4	142.2	210.0
24"	96"	210.0	210.0	134.0	210.0	210.0	210.0
30"		174.2	210.0	111.2	190.6	210.0	210.0
32"		165.4	210.0	105.5	180.9	210.0	210.0
36"		150.8	210.0	96.2	164.9	210.0	210.0
42"		134.4	210.0	85.8	147.0	176.3	210.0
48"		122.5	210.0	78.2	134.0	180.0	210.0
54"		113.6	194.8	72.5	124.3	142.2	210.0
24"	108"	183.8	210.0	117.3	210.0	210.0	210.0
30"		151.7	210.0	96.8	179.8	210.0	210.0
32"		143.8	210.0	91.8	170.4	210.0	210.0
36"		130.7	210.0	83.4	154.8	210.0	210.0
42"		115.9	210.0	73.9	137.3	176.3	210.0
48"		105.0	195.0	67.0	124.4	180.0	210.0
24"	120"	186.7	210.0	119.1	210.0	210.0	210.0
30"		153.6	210.0	98.0	183.8	210.0	210.0
32"		145.4	210.0	92.8	173.9	210.0	210.0
36"		131.8	210.0	84.1	157.6	210.0	210.0
42"		116.4	210.0	74.3	139.2	176.3	210.0

PERFORMANCE VALUES OF ALUMINUM BUCK INSTALLATION ANCHORS

EXT.(+) & INT.(−)

WINDOW DIMS.		ANCHOR SPACING INTO CONC.		ANCHOR SPACING INTO HOLLOW BLOCK		ANCHOR SPACING INTO WOOD	
WIDTH	HEIGHT	16" O.C.	8" O.C.	16" O.C.	8" O.C.	16" O.C.	8" O.C.
19-1/8"	26"	210.0	210.0	210.0	210.0	210.0	210.0
26-1/2"		210.0	210.0	210.0	210.0	210.0	210.0
37"		210.0	210.0	185.5	210.0	210.0	210.0
53-1/8"		210.0	210.0	148.0	210.0	198.8	210.0
19-1/8"	38-3/8"	210.0	210.0	210.0	210.0	210.0	210.0
26-1/2"		210.0	210.0	173.9	210.0	210.0	210.0
37"		210.0	210.0	157.4	210.0	210.0	210.0
53-1/8"		185.8	210.0	118.5	207.4	159.2	210.0
19-1/8"	50-5/8"	210.0	210.0	196.6	210.0	210.0	210.0
26-1/2"		210.0	210.0	155.9	210.0	210.0	210.0
37"		203.5	210.0	129.9	194.8	210.0	210.0
53-1/8"		171.8	210.0	109.6	180.7	147.3	210.0
19-1/8"	63"	210.0	210.0	188.8	210.0	210.0	210.0
26-1/2"		210.0	210.0	146.4	210.0	210.0	210.0
37"		183.7	210.0	117.2	187.5	210.0	210.0
53-1/8"		156.2	210.0	99.7	159.5	146.9	210.0
19-1/8"	72"	210.0	210.0	161.6	210.0	210.0	210.0
26-1/2"		194.2	210.0	123.9	210.0	210.0	210.0
37"		152.8	210.0	97.5	175.5	210.0	210.0
53-1/8"		125.3	210.0	79.9	143.9	146.9	210.0
19-1/8"	76"	210.0	210.0	151.9	210.0	210.0	210.0
26-1/2"		181.9	210.0	116.0	208.9	210.0	210.0
37"		142.1	210.0	90.7	163.3	210.0	210.0
53-1/8"		115.1	207.3	73.5	132.2	146.9	210.0

ALUMINUM BUCK FRAMING DETAILS

REFER TO SHEETS 3 THRU 9 FOR WINDOW CAPACITIES
USE LOWER APPLICABLE VALUES.

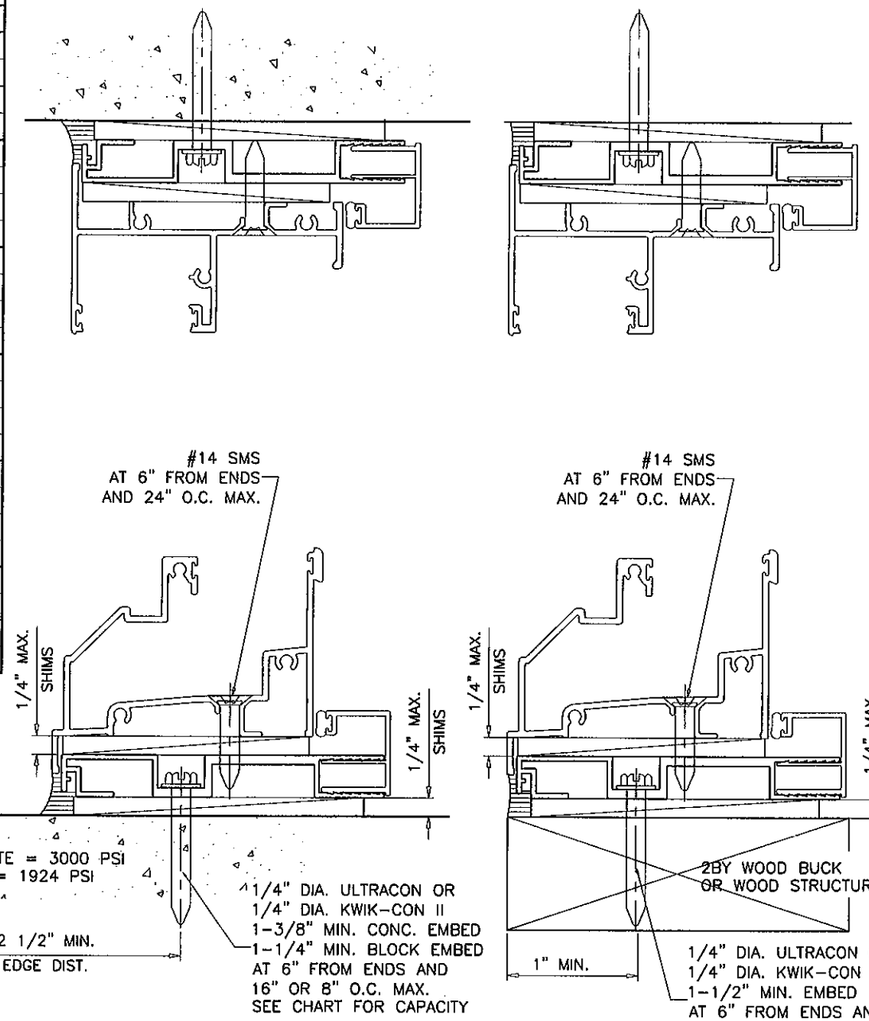

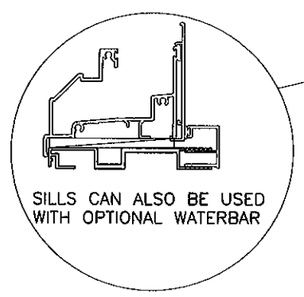

TYPICAL INSTALLATION DETAIL
ON ALL FOUR SIDES/USING ALUMINUM BUCK SYSTEM

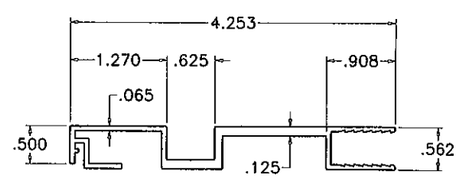

ALUMINUM BUCK
6063-T6

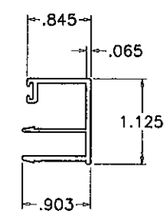

OPTIONAL COVER
6063-T6

Engr: JAVAD AHMAD
CIVIL
FLA. PE # 70592
C.A.N. 3538

FEB 09 2012

PRODUCT REVISED
as complying with the Florida Building Code
Acceptance No 12-0221.14
Expiration Date 05/05/2015
By
Miami Dade Product Control

AL-FAROOQ CORPORATION
ENGINEERS & PRODUCT DEVELOPMENT
1235 S.W. 87 AVE
MIAMI, FLORIDA 33174
TEL. (305) 264-8100 FAX. (305) 262-6978
COMP-ANL\W005-04CGI

ALUMINUM SINGLE HUNG WINDOW (L.M.I.)

CGI WINDOWS & DOORS
10100 N.W. 25TH STREET
MIAMI, FL. 33172
TEL. (305) 593-6590 FAX. (305) 593-6592

revisions:

no	date	by	description
A	07.02.08		UPDATED FOR 2007 FBC
B	08.07.08		NO CHANGE THIS SHEET
C	11.12.08		NO CHANGE THIS SHEET
D	01.03.12		CHART REV.

date: 01-28-05
scale: -
dr. by: -
chk. by:

drawing no.
W05-04

PERFORMANCE VALUES OF ALUMINUM BUCK INSTALLATION ANCHORS

EXT.(+) & INT.(−)

WINDOW DIMS.		ANCHORS INTO HOLLOW BLOCK				ANCHORS INTO CONC.				ANCHORS INTO WOOD			
WIDTH	HEIGHT	CLUSTER OF 2	CLUSTER OF 4	CLUSTER OF 6	CLUSTER OF 8	CLUSTER OF 2	CLUSTER OF 4	CLUSTER OF 6	CLUSTER OF 8	CLUSTER OF 2	CLUSTER OF 4	CLUSTER OF 6	CLUSTER OF 8
24"	48"	89.3	178.7	210.0	210.0	140.0	210.0	210.0	210.0	120.0	210.0	210.0	210.0
30"		78.0	155.9	210.0	210.0	122.2	210.0	210.0	210.0	104.7	209.5	210.0	210.0
32"		75.4	150.8	210.0	210.0	118.1	210.0	210.0	210.0	101.3	202.5	210.0	210.0
36"		71.5	142.9	210.0	210.0	112.0	210.0	210.0	210.0	96.0	192.0	210.0	210.0
42"		68.1	136.1	204.2	210.0	106.7	210.0	210.0	210.0	91.4	182.9	210.0	210.0
48"		67.0	134.0	201.0	210.0	105.0	210.0	210.0	210.0	90.0	180.0	210.0	210.0
54"		67.0	134.0	201.0	210.0	105.0	210.0	210.0	210.0	90.0	180.0	210.0	210.0
24"	60"	67.0	134.0	201.0	210.0	105.0	210.0	210.0	210.0	90.0	180.0	210.0	210.0
30"		57.2	114.3	171.5	210.0	89.6	179.2	210.0	210.0	76.8	153.6	210.0	210.0
32"		54.8	109.6	164.5	210.0	85.9	171.8	210.0	210.0	73.6	147.3	210.0	210.0
36"		51.0	102.1	153.1	204.2	80.0	160.0	210.0	210.0	68.6	137.1	205.7	210.0
42"		47.1	94.2	141.4	188.5	73.8	147.7	210.0	210.0	63.3	126.6	189.9	210.0
48"		44.7	89.3	134.0	178.7	70.0	140.0	210.0	210.0	60.0	120.0	180.0	210.0
54"		43.3	86.6	129.9	173.3	67.9	135.8	203.6	210.0	58.2	116.4	174.5	210.0
24"	72"	53.6	107.2	160.8	210.0	84.0	168.0	210.0	210.0	72.0	144.0	210.0	210.0
30"		45.1	90.3	135.4	180.5	70.7	141.5	210.0	210.0	60.6	121.3	181.9	210.0
32"		43.1	86.1	129.2	172.3	67.5	135.0	202.5	210.0	57.9	115.7	173.6	210.0
36"		39.7	79.4	119.1	158.8	62.2	124.4	186.7	210.0	53.3	106.7	160.0	210.0
42"		36.0	72.1	108.1	144.1	56.5	112.9	169.4	210.0	48.4	96.8	145.2	193.6
48"		33.5	67.0	100.5	134.0	52.5	105.0	157.5	210.0	45.0	90.0	135.0	180.0
54"		31.8	63.5	95.3	127.1	49.8	99.6	149.3	199.1	42.7	85.3	128.0	170.7
24"	84"	44.7	89.3	134.0	178.7	70.0	140.0	210.0	210.0	60.0	120.0	180.0	210.0
30"		37.3	74.6	111.9	149.1	58.4	116.9	175.3	210.0	50.1	100.2	150.3	200.3
32"		35.5	70.9	106.4	141.9	55.6	111.2	166.8	210.0	47.6	95.3	142.9	190.6
36"		32.5	65.0	97.5	129.9	50.9	101.8	152.7	203.6	43.6	87.3	130.9	174.5
42"		29.2	58.3	87.5	116.7	45.7	91.4	137.1	182.9	39.2	78.4	117.6	156.7
48"		26.8	53.6	80.4	107.2	42.0	84.0	126.0	168.0	36.0	72.0	108.0	144.0
54"		25.1	50.2	75.2	100.3	39.3	78.6	117.9	157.2	33.7	67.4	101.1	134.7
24"	96"	38.3	76.6	114.9	153.1	60.0	120.0	180.0	210.0	51.4	102.9	154.3	205.7
30"		31.8	63.5	95.3	127.1	49.8	99.6	149.3	199.1	42.7	85.3	128.0	170.7
32"		30.1	60.3	90.4	120.6	47.2	94.5	141.7	189.0	40.5	81.0	121.5	162.0
36"		27.5	55.0	82.5	109.9	43.1	86.2	129.2	172.3	36.9	73.8	110.8	147.7
42"		24.5	49.0	73.5	98.0	38.4	76.8	115.2	153.6	32.9	65.8	98.7	131.7
48"		22.3	44.7	67.0	89.3	35.0	70.0	105.0	140.0	30.0	60.0	90.0	120.0
54"		20.7	41.4	62.1	82.9	32.5	64.9	97.4	129.9	27.8	55.7	83.5	111.3
24"	108"	33.5	67.0	100.5	134.0	52.5	105.0	157.5	210.0	45.0	90.0	135.0	180.0
30"		27.7	55.3	83.0	110.7	43.4	86.7	130.1	173.4	37.2	74.3	111.5	148.6
32"		26.2	52.4	78.7	104.9	41.1	82.2	123.3	164.3	35.2	70.4	105.7	140.9
36"		23.8	47.6	71.5	95.3	37.3	74.7	112.0	149.3	32.0	64.0	96.0	128.0
42"		21.1	42.2	63.4	84.5	33.1	66.2	99.3	132.4	28.4	56.7	85.1	113.5
48"		19.1	38.3	57.4	76.6	30.0	60.0	90.0	120.0	25.7	51.4	77.1	102.9
24"	120"	29.8	59.6	89.3	119.1	46.7	93.3	140.0	186.7	40.0	80.0	120.0	160.0
30"		24.5	49.0	73.5	98.0	38.4	76.8	115.2	153.6	32.9	65.8	98.7	131.7
32"		23.2	46.4	69.6	92.8	36.3	72.7	109.0	145.4	31.2	62.3	93.5	124.6
36"		21.0	42.0	63.1	84.1	32.9	65.9	98.8	131.8	28.2	56.5	84.7	112.9
42"		18.6	37.1	55.7	74.3	29.1	58.2	87.3	116.4	24.9	49.9	74.8	99.7

PERFORMANCE VALUES OF ALUMINUM BUCK INSTALLATION ANCHORS

EXT.(+) & INT.(−)

WINDOW DIMS.		ANCHORS INTO HOLLOW BLOCK				ANCHORS INTO CONC.				ANCHORS INTO WOOD			
WIDTH	HEIGHT	CLUSTER OF 2	CLUSTER OF 4	CLUSTER OF 6	CLUSTER OF 8	CLUSTER OF 2	CLUSTER OF 4	CLUSTER OF 6	CLUSTER OF 8	CLUSTER OF 2	CLUSTER OF 4	CLUSTER OF 6	CLUSTER OF 8
19-1/8"	26"	210.0	210.0	210.0	210.0	210.0	210.0	210.0	210.0	210.0	210.0	210.0	210.0
26-1/2"		210.0	210.0	210.0	210.0	210.0	210.0	210.0	210.0	210.0	210.0	210.0	210.0
37"		210.0	210.0	210.0	210.0	210.0	210.0	210.0	210.0	210.0	210.0	210.0	210.0
53-1/8"		210.0	210.0	210.0	210.0	210.0	210.0	210.0	210.0	210.0	210.0	210.0	210.0
19-1/8"	38-3/8"	140.1	210.0	210.0	210.0	210.0	210.0	210.0	210.0	188.2	210.0	210.0	210.0
26-1/2"		115.9	210.0	210.0	210.0	181.7	210.0	210.0	210.0	155.7	210.0	210.0	210.0
37"		105.0	209.9	210.0	210.0	164.5	210.0	210.0	210.0	141.0	210.0	210.0	210.0
53-1/8"		104.8	209.6	210.0	210.0	164.3	210.0	210.0	210.0	140.8	210.0	210.0	210.0
19-1/8"	50-5/8"	98.3	196.6	210.0	210.0	154.0	210.0	210.0	210.0	132.0	210.0	210.0	210.0
26-1/2"		77.9	155.9	210.0	210.0	122.1	210.0	210.0	210.0	104.7	209.4	210.0	210.0
37"		64.9	129.9	194.8	210.0	101.8	203.5	210.0	210.0	87.2	174.5	210.0	210.0
53-1/8"		60.2	120.5	180.7	210.0	94.4	188.8	210.0	210.0	80.9	161.8	210.0	210.0
19-1/8"	63"	75.5	151.0	210.0	210.0	118.4	210.0	210.0	210.0	101.4	202.9	210.0	210.0
26-1/2"		58.5	117.1	175.6	210.0	91.7	183.5	210.0	210.0	78.6	157.3	210.0	210.0
37"		46.9	93.8	140.6	187.5	73.5	146.9	210.0	210.0	63.0	125.9	188.9	210.0
53-1/8"		39.9	79.7	119.6	159.5	62.5	125.0	187.5	210.0	53.6	107.1	160.7	210.0
19-1/8"	72"	64.6	129.3	193.9	210.0	101.3	202.6	210.0	210.0	86.8	173.7	210.0	210.0
26-1/2"		49.6	99.2	148.7	198.3	77.7	155.4	210.0	210.0	66.6	133.2	199.8	210.0
37"		39.0	78.0	117.0	156.0	61.1	122.2	183.3	210.0	52.4	104.8	157.1	209.5
53-1/8"		32.0	64.0	95.9	127.9	50.1	100.2	150.3	200.4	43.0	85.9	128.9	171.8
19-1/8"	76"	60.7	121.5	182.2	210.0	95.2	190.4	210.0	210.0	81.6	163.2	210.0	210.0
26-1/2"		46.4	92.8	139.2	185.7	72.7	145.5	210.0	210.0	62.3	124.7	187.0	210.0
37"		36.3	72.6	108.8	145.1	56.9	113.7	170.6	210.0	48.7	97.5	146.2	194.9
53-1/8"		29.4	58.8	88.2	117.6	46.1	92.1	138.2	184.2	39.5	79.0	118.4	157.9

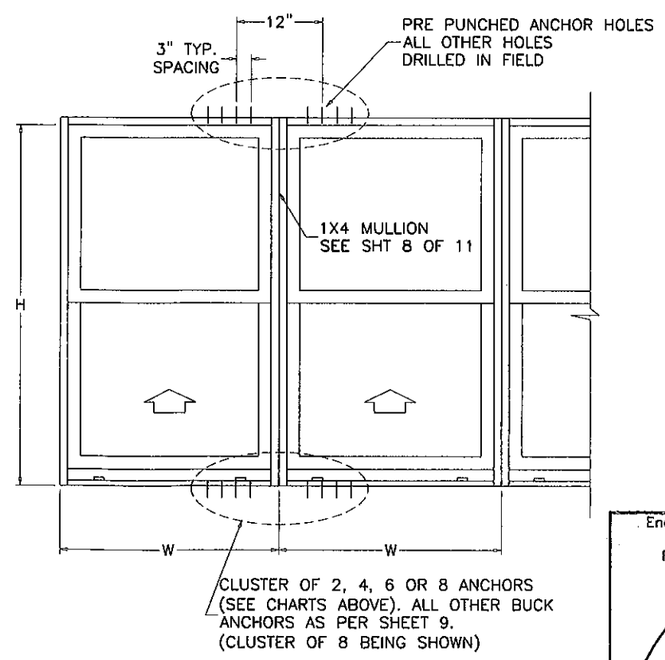

NOTE: ALUMINUM BUCKS ARE SUPPLIED WITH CLUSTER OF 2 (1 SCREW HOLE PER SIDE) STANDARD. EXTRA HOLES MUST BE FIELD DRILLED IF REQUIRED.

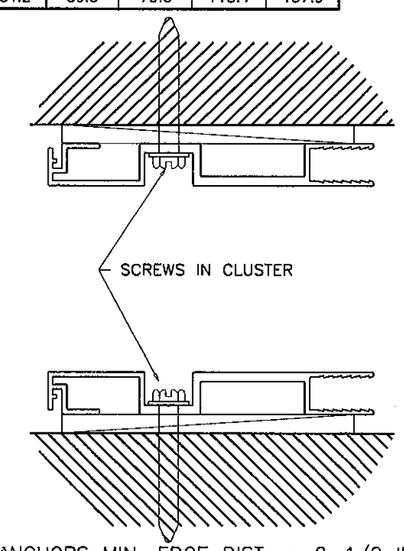

ANCHORS MIN. EDGE DIST. = 2-1/2 IN.

ANCHORS AT ALUMINUM BUCK FRAMING (AT MULLION ENDS)

FOR WINDOW ANCHORING TO ALUMINUM BUCKS USE #14 SCREWS SPACED AS PER SHEETS 7 & 8.

Engr: JAVAD AHMAD
CIVIL
FLA. PE # 70592
C.A.N. 3538

FEB 09 2012

PRODUCT REVISED
is complying with the Florida Building Code
Acceptance No 12-0221.14
Expiration Date 05/05/2015
By
Miami Dade Product Control

AL-FAROOQ CORPORATION
ENGINEERS & PRODUCT DEVELOPMENT
1235 S.W. 87 AVE
MIAMI, FLORIDA 33174
TEL. (305) 264-8100 FAX. (305) 262-6978

COMP-ANL\W005-04CGI

ALUMINUM SINGLE HUNG WINDOW (L.M.I.)

CGI WINDOWS & DOORS
10100 N.W. 25TH STREET
MIAMI, FL. 33172
TEL. (305) 593-6590 FAX. (305) 593-6592

revisions:

no	date	by	description
A	07.02.08		UPDATED FOR 2007 FBC
B	08.07.08		REV. PER BCCO COMMENTS
C	11.12.08		NO CHANGE THIS SHEET
D	01.03.12		CHART REV.

date: 01-28-05
scale: -
dr. by: -
chk. by:

drawing no. W05-04