MIAMI-DADE COUNTY
DEPARTMENT OF PERMITTING, ENVIRONMENT, AND REGULATORY AFFAIRS (PERA)
BOARD AND CODE ADMINISTRATION DIVISION

MIAMI-DADE COUNTY
PRODUCT CONTROL SECTION
11805 SW 26 Street, Room 208
Miami, Florida 33175-2474
T (786) 315-2590 F (786) 315-2599
www.miamidade.gov/pera/

NOTICE OF ACCEPTANCE (NOA)

Southeastern Door Company
1505 Commerce Lane
Jupiter, FL 33458

SCOPE:

This NOA is being issued under the applicable rules and regulations governing the use of construction materials. The documentation submitted has been reviewed and accepted by Miami-Dade County PERA -Product Control Section to be used in Miami Dade County and other areas where allowed by the Authority Having Jurisdiction (AHJ).

This NOA shall not be valid after the expiration date stated below. The Miami-Dade County Product Control Section (In Miami Dade County) and/or the AHJ (in areas other than Miami Dade County) reserve the right to have this product or material tested for quality assurance purposes. If this product or material fails to perform in the accepted manner, the manufacturer will incur the expense of such testing and the AHJ may immediately revoke, modify, or suspend the use of such product or material within their jurisdiction. PERA reserves the right to revoke this acceptance, if it is determined by Miami-Dade County Product Control Section that this product or material fails to meet the requirements of the applicable building code.

This product is approved as described herein, and has been designed to comply with the Florida Building Code, including the High Velocity Hurricane Zone.

DESCRIPTION: Series "Atlas Plus Series 5000" Aluminum Sliding Glass Door – S.M.I.

APPROVAL DOCUMENT: Drawing No. **12-015,** titled "Atlas Plus Series 5000 Aluminum Sliding Glass Door Large Missile Impact", sheets 1 through 13 of 13, prepared by EngCo. Inc., dated May 03, 2012, signed and sealed by Pedro De Figueiredo, P. E., bearing the Miami–Dade County Product Control Revision stamp with the Notice of Acceptance number and expiration date by the Miami–Dade County Product Control Section.

MISSILE IMPACT RATING: Small Missile Impact Resistant

LABELING: Each unit shall bear a permanent label with the manufacturer's name or logo, city, state and series and following statement: "Miami-Dade County Product Control Approved", noted herein.

RENEWAL of this NOA shall be considered after a renewal application has been filed and there has been no change in the applicable building code negatively affecting the performance of this product.

TERMINATION of this NOA will occur after the expiration date or if there has been a revision or change in the materials, use, and/or manufacture of the product or process. Misuse of this NOA as an endorsement of any product, for sales, advertising or any other purposes shall automatically terminate this NOA. Failure to comply with any section of this NOA shall be cause for termination and removal of NOA.

ADVERTISEMENT: The NOA number preceded by the words Miami-Dade County, Florida, and followed by the expiration date may be displayed in advertising literature. If any portion of the NOA is displayed, then it shall be done in its entirety.

INSPECTION: A copy of this entire NOA shall be provided to the user by the manufacturer or its distributors and shall be available for inspection at the job site at the request of the Building Official.

This NOA **revises NOA # 08-0630.02** and consists of this page 1 and evidence pages E-1, as well as approval document mentioned above.

The submitted documentation was reviewed by **Jaime D. Gascon, P.E.**

MIAMI-DADE COUNTY APPROVED

J. Gascon
5/7/12

NOTICE OF ACCEPTANCE: EVIDENCE SUBMITTED

A. DRAWINGS

1. Manufacturer's die drawings and sections (Submitted under file # **08-0630.02**)
2. Drawing No. **12-014,** titled "Atlas plus Series 5000 Aluminum Sliding Glass Door Large Missile Impact", sheets 1 through 13 of 13, prepared by EngCo. Inc., dated May 03, 2012, signed and sealed by Pedro De Figueiredo, P.E.

Note: This revision consists of FBC 2010 notes only.

B. TESTS (Submitted under file # **08-0630.02)**

1. Test reports on: 1) Air Infiltration Test, per FBC, TAS 202–94
   2) Uniform Static Air Pressure Test, Loading per FBC, TAS 202–94
   3) Water Resistance Test, per FBC, TAS 202–94
   4) Small Missile Impact Test per FBC, TAS 201–94
   5) Large Missile Impact Test per FBC, TAS 201–94
   6) Cyclic Wind Pressure Loading per FBC, TAS 203–94
   7) Forced Entry Test, per FBC 2411 3.2.1 and TAS 202-94

along with marked–up drawings and installation diagram of an Aluminum Sliding Glass Door, prepared by Hurricane Test Laboratory, Inc., Test Report No.'s **HTL 0151–0604–09** and **HTL 0151–0801–08,** dated 09/09 thru 02/12/09, signed & sealed by Vinu J. Abraham, P. E.

2. Test reports on: 1) Uniform Static Air Pressure Test, Loading per FBC, TAS 202–94
   2) Large Missile Impact Test per FBC, TAS 201–94
   3) Cyclic Wind Pressure Loading per FBC, TAS 203–94

along with marked–up drawings and installation diagram of a Aluminum Sliding Glass Door, prepared by Hurricane Test Laboratory, Inc., Test Report No(s) **HTL 0151–0909–01**, dated 09/07/01, **HTL 0151-0117-03** dated 1/14/03 and **HTL 0151–1209–02**, dated 12/12/02, all signed and sealed by Vinu J. Abraham, P. E. ***(Submitted under NOA No. 03–0527.08).***

D. QUALITY ASSURANCE

1. Miami Dade Department of Permitting, Environment, and Regulatory Affairs (PERA).

E. MATERIAL CERTIFICATIONS

1. Notice of Acceptance No. **11-0624.02** issued to E.I. DuPont DeNemours & Co., Inc. for their "**DuPont Sentry Glass ®**", expiring on 01/14/17.
2. Notice of Acceptance No. **11-0624.01** issued to E.I. DuPont DeNemours & Co., Inc. for their **"DuPont Butacite® PVB, Interlayer**", expiring on 12/11/16.

F. STATEMENTS

1. Statement letter of conformance to FBC 2010 and letter of no financial interest, prepared by EngCo. dated FEB 10, 2010, signed and sealed by Pedro De Figueiredo, P.E.
2. Lab compliance as part of the above referenced test report.

G. OTHER

1. This NOA **revises** NOA # **08-0630.02**, expiring on June 26, 2013.

Jaime D. Gascon, P. E.
Product Control Section Supervisor
NOA No 12-0223.04
Expiration Date: June 26, 2013
Approval Date: May 10, 2012

GENERAL NOTES:

FLORIDA BUILDING CODE 2010 HVHZ
LARGE & SMALL MISSILE IMPACT RATED

1- CODE: THIS PRODUCT HAS BEEN TESTED AND DESIGNED IN ACCORDANCE WITH THE FBC 2010 INCLUDING THE HIGH VELOCITY HURRICANE ZONE (HVHZ).

2- DEFINITION: THIS PRODUCT IS AN ALUMINUM SLIDING GLASS DOOR DESIGNED, CONSTRUCTED AND TESTED PROVIDING PROTECTION FROM HURRICANE FORCE WINDS AND WIND BORNE DEBRIS (SMALL MISSILE) WITHIN THE ALLOWABLE DESIGNED PRESSURES AND LIMITATIONS STATED IN THIS APPROVAL. INSTALLATION OF HURRICANE PROTECTION DEVICES IS REQUIRED FOR INSTALLATIONS BELOW 30' ELEVATION.

3- POSTING: PRODUCT SHALL BE LABELED AS PER FBC 2010 SECTION 1715.5.2.1. THE PERMANENT LABEL, MARKING OR ETCHING SHALL PROVIDE TRACEABILITY TO THE MANUFACTURER AND PRODUCT. THE FOLLOWING SHALL ALSO BE REQUIRED EITHER ON THE PERMANENT LABEL OR ON A TEMPORARY SUPPLEMENTAL LABEL APPLIED BY THE MANUFACTURER: INFORMATION IDENTIFYING THE MANUFACTURER,THE PRODUCT MODEL/SERIES NUMBER, POSITIVE AND NEGATIVE DESIGN PRESSURE RATING, PRODUCT MAXIMUM SIZE, GLAZING THICKNESS, IMPACT-RESISTANCE RATING IF APPLICABLE, THE FLORIDA PRODUCT APPROVAL NUMBER, APPLICABLE TEST STANDARD(S), AND MIAMI DADE NOA NUMBER, THE TEMPORARY SUPPLEMENTAL LABEL SHALL REMAIN ON THE WINDOW UNTIL FINAL APPROVAL BY THE BUILDING OFFICIAL. SAMPLE LABEL:

"SOUTHEASTERN DOOR COMPANY - JUPITER - FLORIDA
SERIES 5000 ATLAS PLUS SLIDING GLASS DOOR
SMALL MISSILE IMPACT RATED
MIAMI-DADE PRODUCT CONTROL APPROVED

4- LOADS: DESIGNED LOAD CALCULATED BASED ON THE ASCE 7-10 AND PROVIDED BY A PROFESSIONAL ARCHITECT OR ENGINEER FOR EACH SPECIFIC PROJECT. THE CALCULATED DESIGNED PRESSURE MUST NOT EXCEED THE ALLOWABLE PRESSURES HERE IN SPECIFIED. THE DESIGN PRESSURES, AS DETERMINED FROM ASCE 7-10, ARE PERMITTED TO BE MULTIPLE BY 0.6

5- MATERIAL: ALL ALUMINUM PARTS TO BE 6063-T6 ALLOY OR AS NOTED AND GLAZING TO BE LAMINATED IMPACT GLASS AS SPECIFIED ON THIS APPROVAL.

6- FASTENERS: ASSEMBLY SCREWS AND ANCHORS SHALL BE AS SPECIFIED IN THE CURRENT SET OF DRAWINGS. INSTALLATION AND LOADS AS PER THIS APPROVAL. ANCHOR SPACING AND LOADS MUST NOT EXCEED THE MAXIMUM LIMITS SPECIFIED BY THIS APPROVAL.

7- USE: IT SHALL BE THE RESPONSIBILITY OF THE CONTRACTOR, ARCHITECT OR ENGINEER OF RECORD TO VERIFY THE FOLLOWING:
7.1- THE STABILITY OF THE STRUCTURE WHERE THE PRODUCT IS TO BE ATTACHED INSURING PROPER ANCHORAGE.
7.2- THE SITE SPECIFIC PROJECT CRITERIA, SUCH AS BUT NOT LIMITED TO, LOCAL CODE REQUIREMENTS, DESIGNED PRESSURES ETC.
7.3- THAT THIS APPROVAL IS ADEQUATE TO THE SPECIFIC PROJECT.

8- DISSIMILAR MATERIALS: MATERIALS, INCLUDING BUT NOT LIMITED TO STEEL, THAT COME IN CONTACT WITH OTHER DISSIMILAR MATERIALS SHALL MEET THE REQUIREMENTS OF 2010 FLORIDA BUILDING CODE.

DOOR ELEVATIONS WITH OPERABLE AND FIXED MODULES CONFIGURATIONS

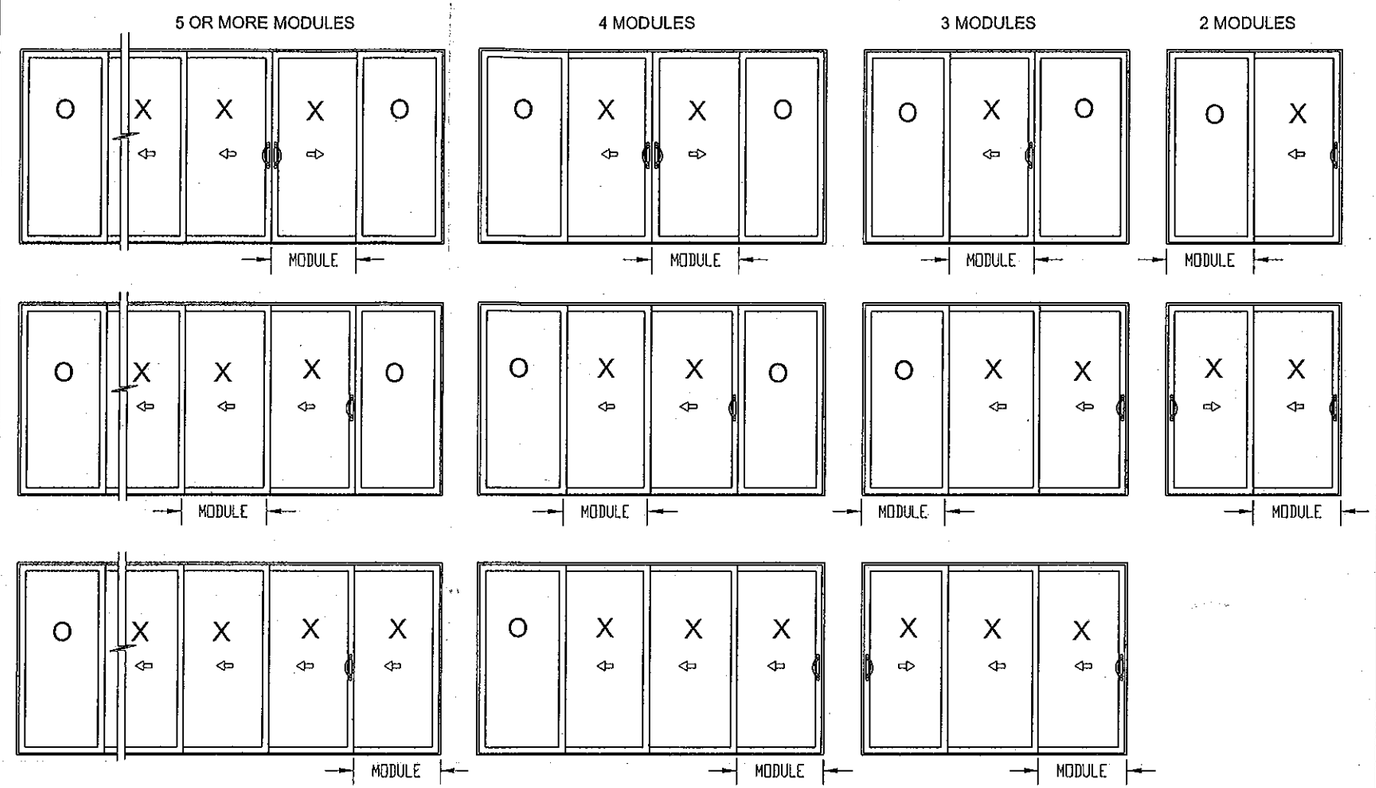

DOOR CAN BE CONFIGURED WITH AS MANY MODULES AS THE TWO, THREE, FOUR OR FIVE TRACK SYSTEM CAN FIT.

DESIGN RATINGS:

SHEET	TABLE	DESCRIPTION
2	1	RATING FOR 4 OR 3 DOOR MODULES WITH REINFORCEMENT
	1	RATING FOR 2 DOOR MODULES WITH REINFORCEMENT
	1A	RATING FOR MORE THAN 4 DOOR MODULES WITH REINFORCEMENT
	2	RATING FOR 4, 3 OR 2 DOOR MODULES WITHOUT REINFORCEMENT
8	3	RATING FOR ANCHORAGE INTO 2 TRACK
9	4	RATING FOR ANCHORAGE INTO 3, 4 & 5 TRACKS

NOTES:
1- DESIGN RATING WILL BE THE LOWEST PRESSURE FROM APPLICABLE TABLES
2- PLEASE REFER TO SHEET 6 FOR FURTHER POSITIVE PRESSURE LIMITATION DUE TO THRESHOLD HEIGHT.

TABLE OF CONTENTS:

SHEET	DESCRIPTION	SHEET	DESCRIPTION
1	GENERAL NOTES, TYPICAL ELEVATIONS	8	FRAMING ANCHORAGE RATING AND SCHEDULE
2	DESIGN RATING TABLES 1, 1A AND 2	9	FRAMING ANCHORAGE RATING AND SCHEDULE
3	SECTION DETAILS	10	DOOR FRAMING COMPONENTS
4	SECTION DETAILS & GLAZING DETAILS	11	DOOR SASH COMPONENTS AND BILL OF MATERIALS
5	FRAMING ANCHORAGE DETAILS	12	DOOR HARDWARE
6	FRAMING ANCHORAGE DETAILS	13	DOOR & FRAMING ASSEMBLY
7	FRAMING ANCHORAGE DETAIS		

MANUFACTURER:

SOUTHEASTERN
Manufacturers of Impact Resistant Sliding Glass Doors
1505 COMMERCE LANE, P.O. BOX 794
JUPITER, FLORIDA 33458
PHONE: (561) 746-5493
FAX: (561) 575-1826

PRODUCT:
ATLAS PLUS
SERIES 5000 ALUMINUM SLIDING GLASS DOOR
SMALL MISSILE IMPACT

Engineering:
EngCo Inc.
CA 8116
5595 Orange Dr. 201
Davie, Fl. 33314
Tel.: (954) 585-0304
Fax: (954) 585-0305
ENGCOMADE.COM

PEDRO M. DE FIGUEIREDO
LICENSE No. 52609
STATE OF FLORIDA
PROFESSIONAL ENGINEER
MAY 08 2012
Engineer Seal
Pedro De Figueiredo
PE 52609

MIAMI-DADE BCCO:

PRODUCT REVISED
In complying with the Florida Building Code
Application No 12-0223.04
Registration Date JUNE 26, 2013
Miami-Dade Product Control

Date: 01/28/12
Scale: NA
Design by: PPMF

Drawing Number
12-015

TYPICAL ELEVATION AND DESIGNED PRESSURES

TABLE 1

2 DOOR MODULES W/ REINFORCEMENT
4 OR 3 DOOR MODULES W/ REINFORCEMENT
SECTIONS 7 AND 6

		# OR DOOR MODULES				
		FOUR & THREE		TWO		
MODULE WIDTH	FRAME HEIGHT	PD RATING (+)	PD RATING (-)	PD RATING (+)	PD RATING (-)	GLASS TYPE
30	80	90.0	100.0	90.0	100.0	B C
	84	90.0	100.0	90.0	100.0	B C
	96	90.0	100.0	90.0	100.0	B C
	100	90.0	100.0	90.0	100.0	B C
	104	90.0	97.6	90.0	100.0	B C
	108	83.7	83.7	90.0	100.0	B C
	120	54.6	54.6	66.2	66.2	B C
36	80	90.0	100.0	90.0	100.0	B C
	84	90.0	100.0	90.0	100.0	B C
	96	90.0	100.0	90.0	100.0	B C
	100	90.0	97.0	90.0	100.0	B C
	104	82.6	82.6	90.0	100.0	B C
	108	70.7	70.7	85.7	85.7	B C
	120	46.0	46.0	55.8	55.8	B C
42	80	90.0	100.0	90.0	100.0	B C
	84	90.0	100.0	90.0	100.0	B C
	96	90.0	98.7	90.0	100.0	B C
	100	84.7	84.7	90.0	100.0	B C
	104	72.0	72.0	87.3	87.3	B C
	108	61.6	61.6	74.7	74.7	B C
	120	40.0	40.0	48.4	48.4	C
48	80	90.0	100.0	90.0	100.0	B C
	84	90.0	100.0	90.0	100.0	B C
	88	90.0	98.2	90.0	100.0	B C
	92	90.0	93.9	90.0	100.0	B C
	96	90.0	90.0	90.0	100.0	B C
	100	70.0	75.8	70.0	91.9	C
	104	64.3	64.3	70.0	78.0	C
	105	60.6	60.6	70.0	73.4	C
52	80	90.0	99.7	90.0	100.0	B C
	84	90.0	94.9	90.0	100.0	B C
	88	90.0	90.6	90.0	100.0	C
	97.5	70.0	79.2	70.0	96.0	C
60	80	70.0	86.4	70.0	98.3	C
	82	70.0	84.3	70.0	97.3	C
	84	70.0	82.3	70.0	96.0	C

NOTE: MODULE WIDTH IN INCHES
FRAME HEIGHT IN INCHES
PRESSURE RATING IN PSF
2" THRESHOLD LIMITED TO +50 PSF

EXAMPLE: TABLES 1 AND 2
192X96 OX-XO - 4 MODULES
MODULE WIDTH= 192/4= 48" // FRAME HEIGHT= 96"
DESIGNED PRESSURE +90, -90 PSF W/ REINF.
DESIGNED PRESSURE +70, -70 PSF W/OUT REINF.

EXAMPLE: TABLES 1 AND 2
96X96 OX - 2 MODULES
MODULE WIDTH= 96/2= 48" // FRAME HEIGHT= 96"
DESIGNED PRESSURE +90, -100 PSF W/ REINF.
DESIGNED PRESSURE +70, -70 PSF W/OUT REINF.

EXAMPLE: TABLES 1A
288X96 OXX-XXO - 6 MODULES
MODULE WIDTH= 288/6= 48" // FRAME HEIGHT= 96"
DESIGNED RATING= ±70 PSF W/ REINF.

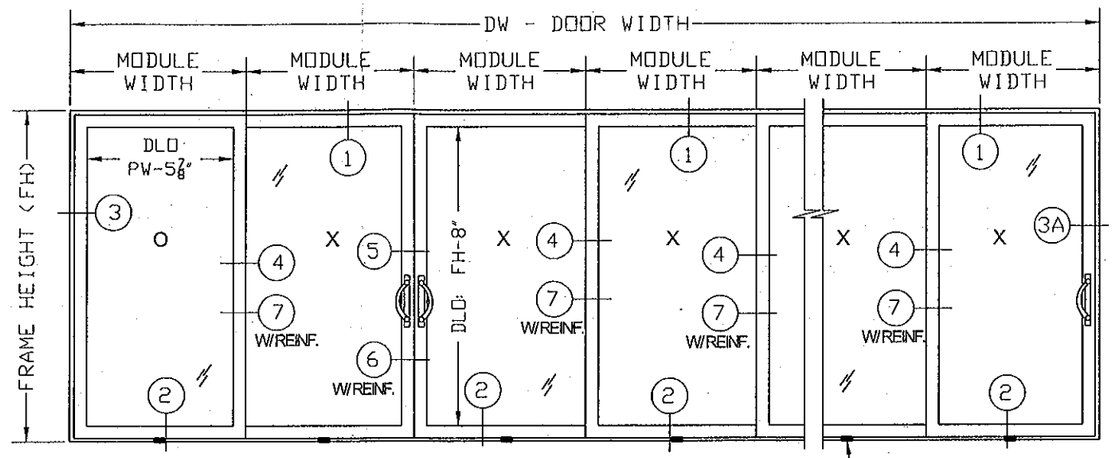

DM= DW / NUMBER OF MODULES
SEE SHEET 3 AND 4 FOR DETAILS

DLO: PANEL WIDTH - 5 7/8"
DLO: FRAME HEIGHT - 8"

TABLE 1A

MORE THAN 4 DOOR MODULES W/ REINFORCEMENT
SECTIONS 7 AND 6

MODULE WIDTH	FRAME HEIGHT	PD RATING (+)	PD RATING (-)	GLASS TYPE
30	80	90.0	100.0	B C
	84	90.0	100.0	B C
	96	90.0	99.6	B C
	100	89.1	89.1	B C
	104	75.9	75.9	B C
	108	65.1	65.1	B C
	120	42.5	42.5	B C
36	80	90.0	100.0	B C
	84	90.0	100.0	B C
	96	86.2	86.2	B C
	100	75.4	75.4	B C
	104	64.2	64.2	B C
	108	55.0	55.0	B C
	120	35.8	35.8	B C
42	80	90.0	96.0	B C
	84	90.0	91.4	B C
	96	76.8	76.8	B C
	100	65.9	65.9	B C
	104	56.0	56.0	B C
	108	47.9	47.9	B C
48	80	84.0	84.0	B C
	84	80.0	80.0	B C
	88	76.4	76.4	B C
	92	73.0	73.0	B C
	96	70.0	70.0	B C
54	80	74.7	74.7	B C
	85	70.3	70.3	B C

NOTE: MODULE WIDTH IN INCHES
FRAME HEIGHT IN INCHES
PRESSURE RATING IN PSF
2" THRESHOLD LIMITED TO +50 PSF

TABLE 2

4, 3 OR 2 DOOR MODULES W/OUT REINFORCEMENT
SECTIONS 4 AND 5

MODULE WIDTH	FRAME HEIGHT	PD RATING (+)	PD RATING (-)	GLASS TYPE
30	80	70.0	70.0	B C
	84	70.0	70.0	B C
	96	70.0	70.0	B C
	100	70.0	70.0	B C
	104	70.0	70.0	B C
	108	65.1	65.1	B C
	120	42.5	42.5	B C
36	80	70.0	70.0	B C
	84	70.0	70.0	B C
	96	70.0	70.0	B C
	100	70.0	70.0	B C
	104	64.2	64.2	B C
	108	55.0	55.0	B C
	120	35.8	35.8	B C
42	80	70.0	70.0	B C
	84	70.0	70.0	B C
	96	70.0	70.0	B C
	100	65.9	65.9	B C
	104	56.0	56.0	B C
	110	44.9	44.9	B C
48	80	70.0	70.0	B C
	84	70.0	70.0	B C
	88	70.0	70.0	B C
	92	70.0	70.0	B C
	96	70.0	70.0	B C
54	80	70.0	70.0	B C
	85	70.0	70.0	B C

NOTE: MODULE WIDTH IN INCHES
FRAME HEIGHT IN INCHES
PRESSURE RATING IN PSF
2" THRESHOLD LIMITED TO +50 PSF

MANUFACTURER:
SOUTHEASTERN
Manufacturers of Impact Resistant Sliding Glass Doors
1505 COMMERCE LANE, P.O. BOX 794
JUPITER, FLORIDA 33458
PHONE: (561) 746-5493
FAX: (561) 575-1826

PRODUCT:
ATLAS PLUS
SERIES 5000 ALUMINUM SLIDING GLASS DOOR SMALL MISSILE IMPACT

Engineering:
EngCo Inc.
CA 8116
5595 Orange Dr. 201
Davie, Fl. 33314
Tel.: (954) 585-0304
Fax: (954) 585-0305
ENGCO@AOL.COM

PEDRO M. DE FIGUEIREDO
LICENSE No. 52609
STATE OF FLORIDA
PROFESSIONAL ENGINEER
Engineer Seal
Pedro De Figueiredo
PE 52609

MIAMI-DADE BCCO:

PRODUCT REVISED
in complying with the Florida Building Code
Acceptance No. 12-0223.04
Expiration Date 06/26/13
By
Miami-Dade Product Control

Date: 01/28/12
Scale: NA
Design by: PPMF

Drawing Number
12-015

TYPICAL SECTION DETAILS

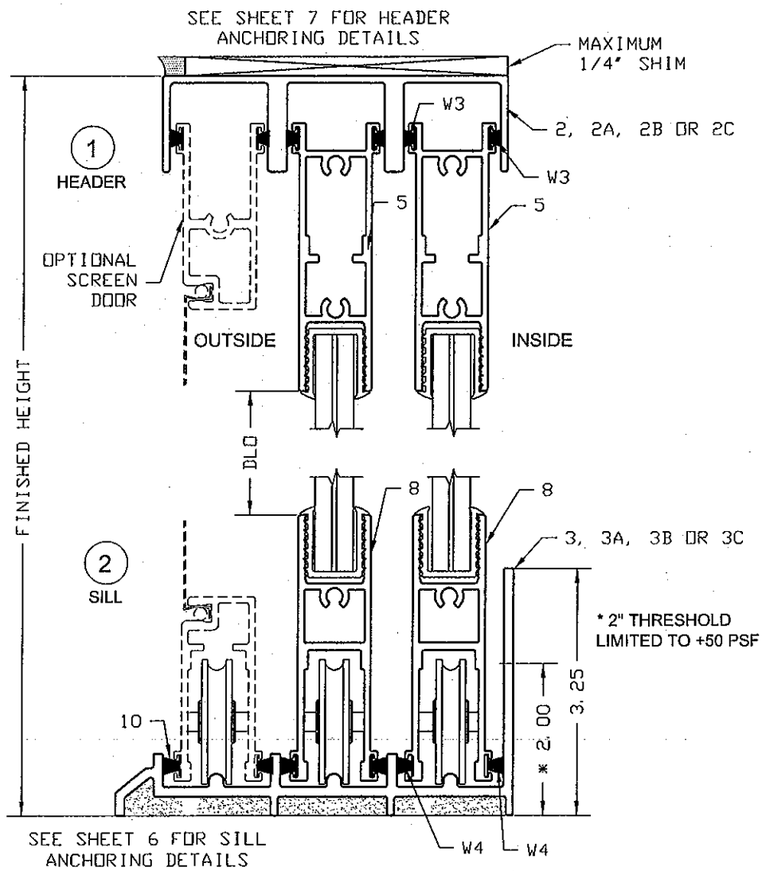

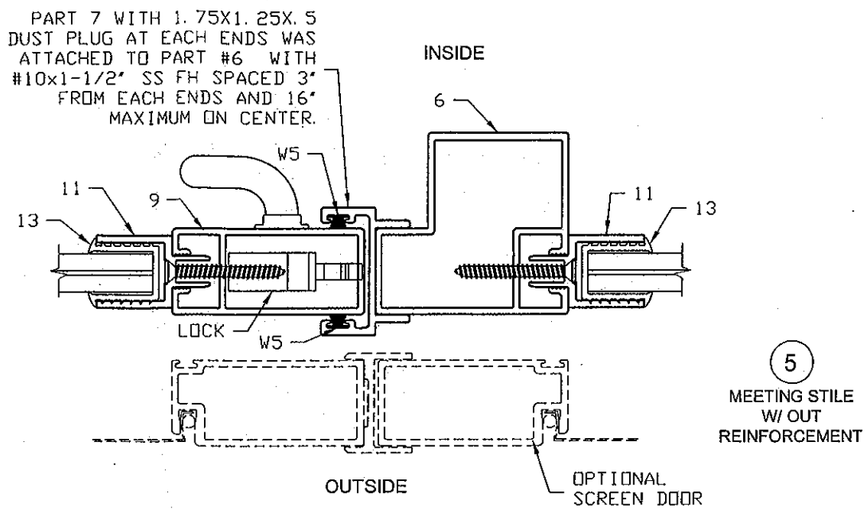

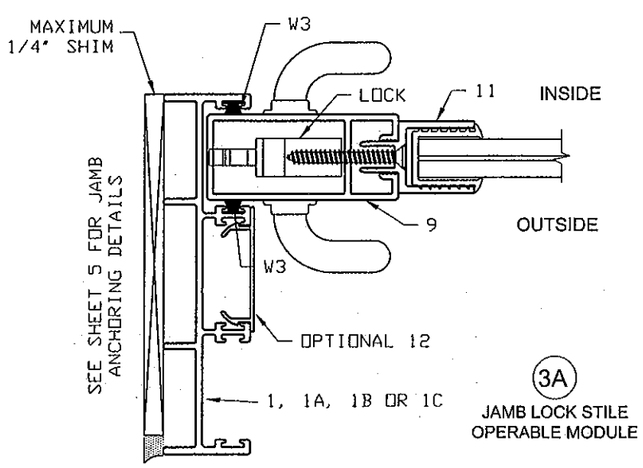

3A
JAMB LOCK STILE OPERABLE MODULE

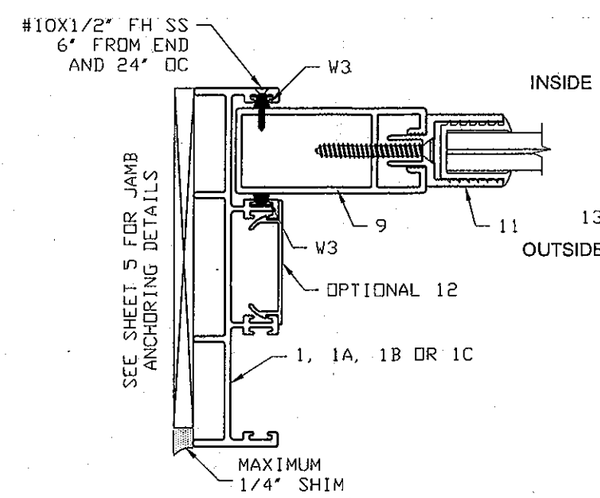

3
JAMB LOCK STILE FIXED MODULE

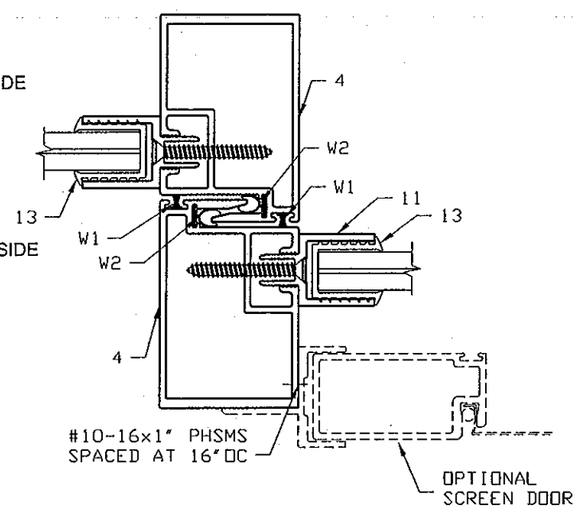

4
INTERLOCK STILE W/ OUT REINFORCEMENT

MANUFACTURER:
SOUTHEASTERN
Manufacturers of Impact Resistant Sliding Glass Doors
1505 COMMERCE LANE, P.O. BOX 794
JUPITER, FLORIDA 33458
PHONE: (561) 746-5493
FAX: (561) 575-1826

PRODUCT:
ATLAS PLUS
SERIES 5000 ALUMINUM SLIDING GLASS DOOR SMALL MISSILE IMPACT

Engineering:
EngCo Inc.
CA 8116
5595 Orange Dr. 201
Davie, Fl. 33314
Tel.: (954) 585-0304
Fax: (954) 585-0305
ENGCO@AOL.COM

PEDRO M. DE FIGUEIREDO
LICENSE
No. 52609
STATE OF FLORIDA
PROFESSIONAL ENGINEER
Engineer Seal
Pedro De Figueiredo
Date 02/28/12

MIAMI-DADE BCCO:

PRODUCT REVISED
as complying with the Florida Building Code
Acceptance No 12-0223.04
Expiration Date 06/26/13
By
Miami Dade Product Control

Date: 01/28/12
Scale: NA
Design by: PPMF

Drawing Number
12-015

SHEET
3 of 13

TYPICAL SECTION DETAILS

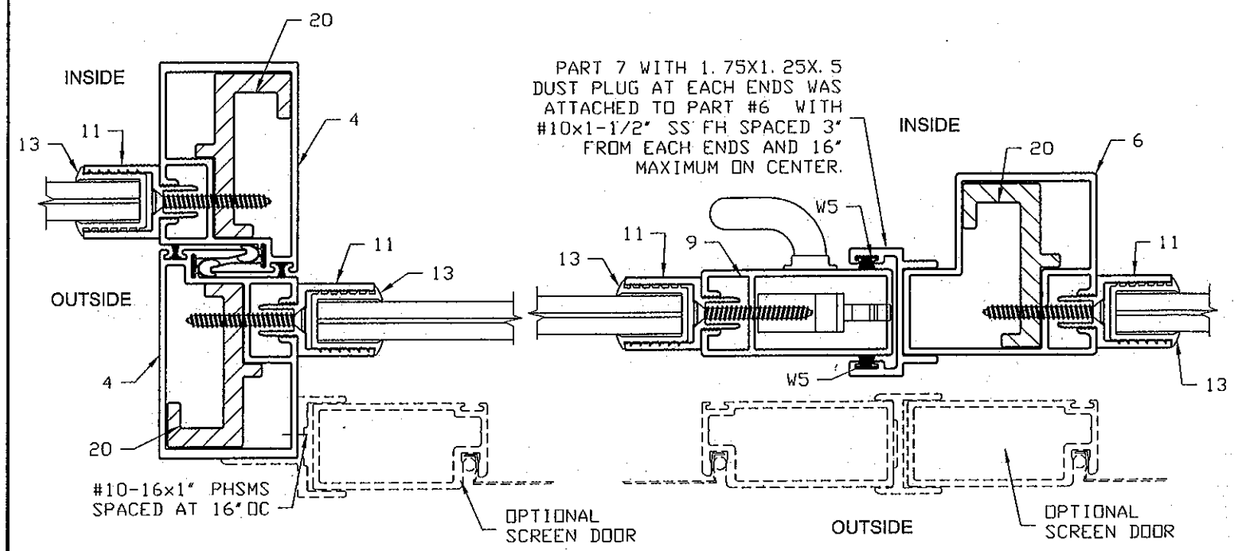

7
INTERLOCK STILE
W/ REINFORCEMENT

6
MEETING STILE
W/ REINFORCEMENT

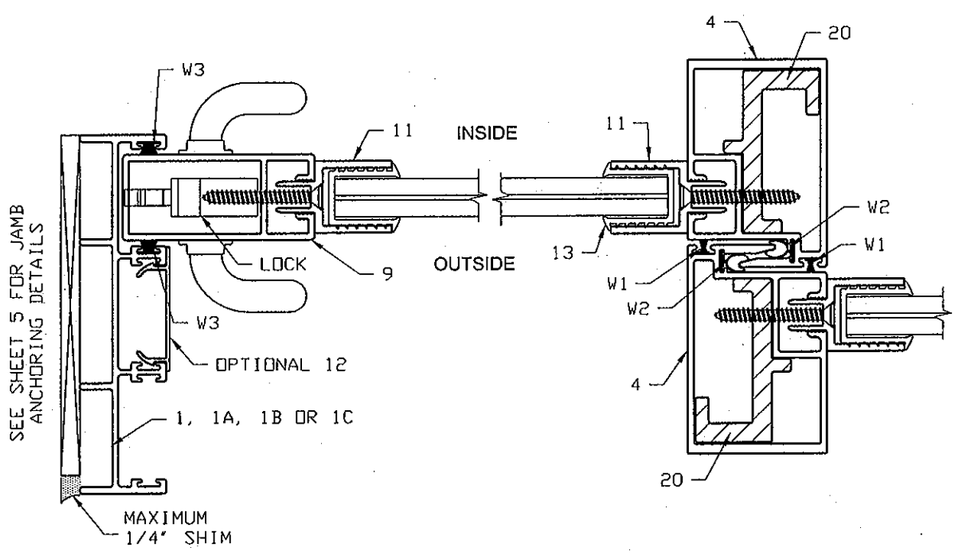

3A
JAMB LOCK STILE
OPERABLE MODULE

7
INTERLOCK STILE
W/ REINFORCEMENT

GLAZING DETAILS

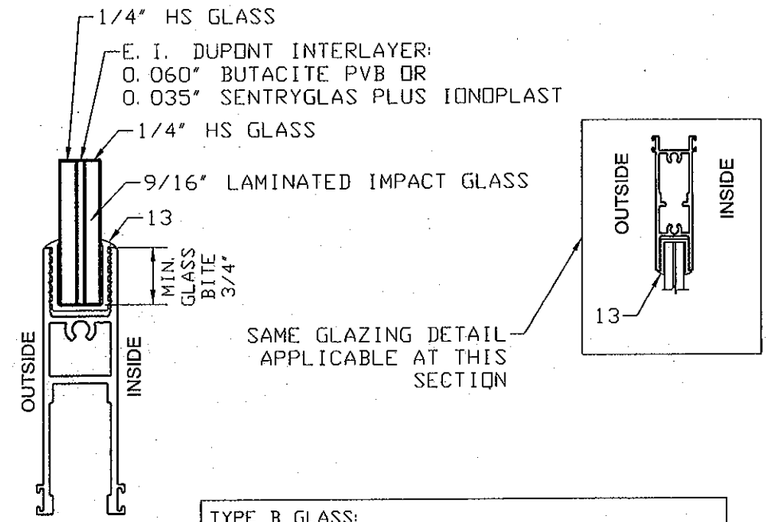

TYPE B GLASS: 9/16" LAMINATED HS WITH 0.06" E.I. DUPONT BUTACITE PVB INTERLAYER
TYPE C GLASS: 9/16" LAMINATED HS WITH 0.035" E.I. DUPONT SENTRYGLAS PLUS IONOPLAST INTERLAYER

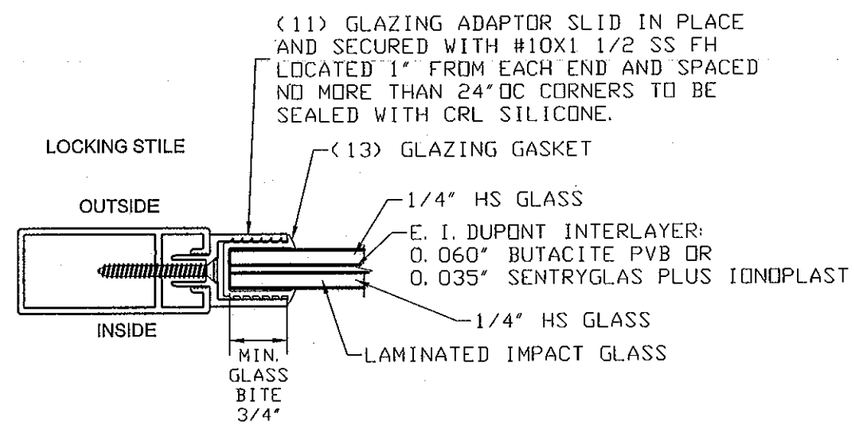

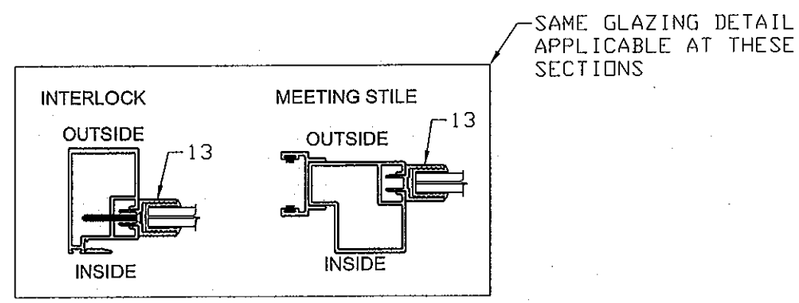

MANUFACTURER:

SOUTHEASTERN

Manufacturers of Impact Resistant Sliding Glass Doors

1505 COMMERCE LANE, P.O. BOX 794
JUPITER, FLORIDA 33458
PHONE: (561) 746-5493
FAX: (561) 575-1826

PRODUCT:

ATLAS PLUS

SERIES 5000 ALUMINUM
SLIDING GLASS DOOR
SMALL MISSILE IMPACT

Engineering:

EngCo Inc.

CA 8116
5595 Orange Dr. 201
Davie, Fl. 33314
Tel.: (954) 585-0304
Fax: (954) 585-0305
ENGCO@AOL.COM

PEDRO M. DE FIGUEIREDO
LICENSE No. 52609
STATE OF FLORIDA
PROFESSIONAL ENGINEER
MAY 08 2012
Engineer Seal
Pedro De Figueiredo
PE 52609

MIAMI-DADE BCCO:

PRODUCT REVISED
as complying with the Florida Building Code
Acceptance No. 12-0223.04
Expiration Date 06/26/13

Date: 01/28/12
Scale: NA
Design by: PPMF

Drawing Number
12-015

SHEET
4 of 13

FRAMING ANCHORAGE DETAILS

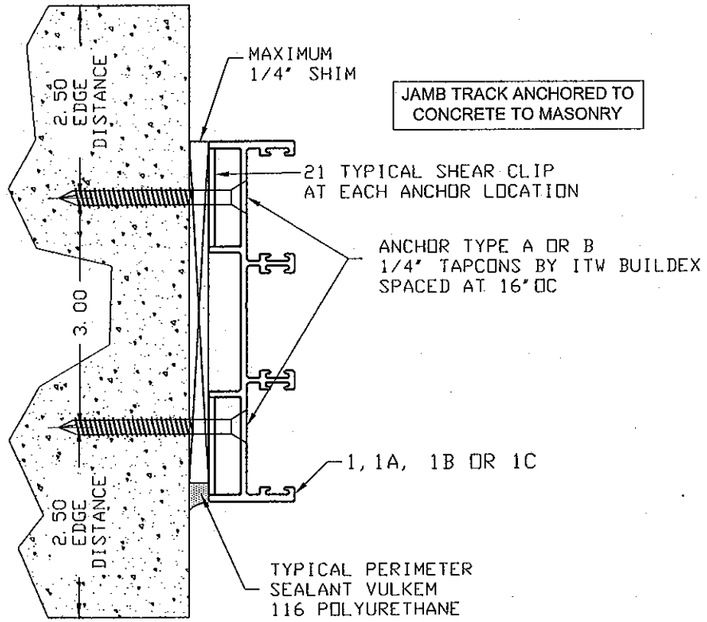

OPTIONAL 1X OR 2X WOOD BUCK
TO BE PROPERLY ENGINEERED
AND SEALED BY OTHERS

TRACK OPTIONS

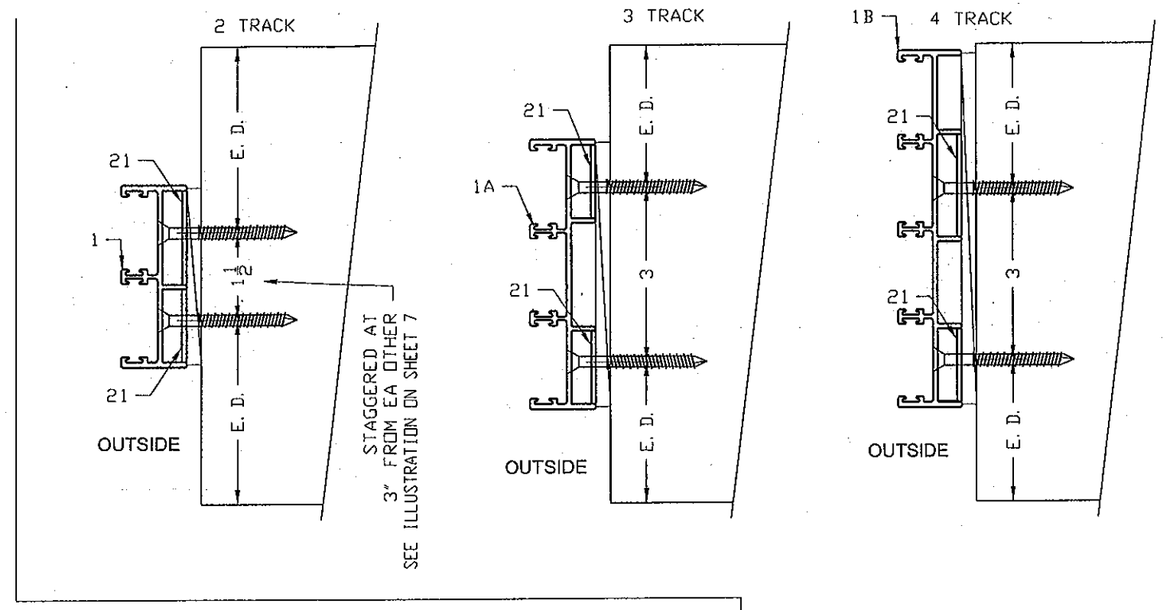

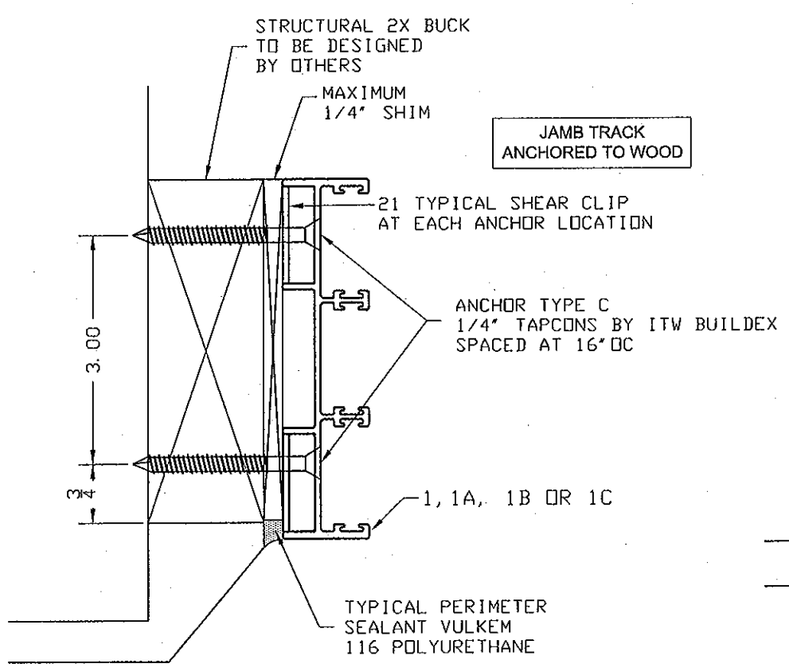

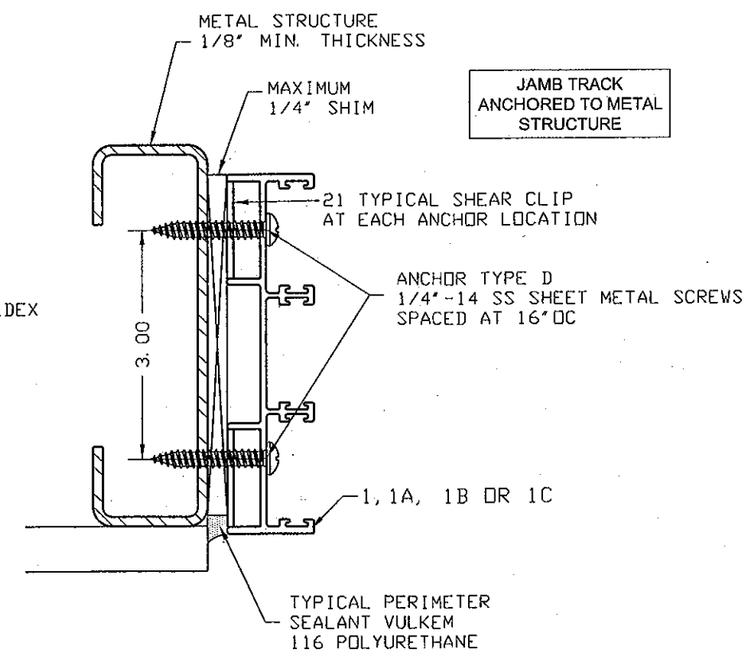

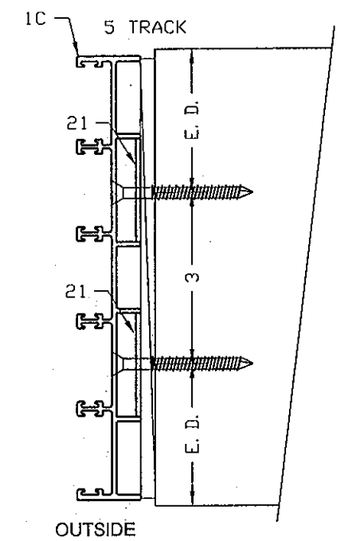

MANUFACTURER:

SOUTHEASTERN

Manufacturers of Impact Resistant Sliding Glass Doors

1505 COMMERCE LANE, P.O.
BOX 794
JUPITER, FLORIDA 33458
PHONE: (561) 746-5493
FAX: (561) 575-1826

PRODUCT:

ATLAS PLUS

SERIES 5000 ALUMINUM
SLIDING GLASS DOOR
SMALL MISSILE IMPACT

Engineering:

EngCo Inc.

CA 8116
5595 Orange Dr. 201
Davie, Fl. 33314
Tel.: (954) 585-0304
Fax: (954) 585-0305
ENGCO@AOL.COM

PEDRO M. DE FIGUEIREDO
LICENSE
No. 52609
STATE OF FLORIDA
PROFESSIONAL ENGINEER

MAY 03 2012

Engineer Seal
Pedro M. De Figueiredo
PE 52609

MIAMI-DADE BCCO:

PRODUCT REVISED
in complying with the Florida
Building Code
Acceptance No. 12-0223.04
Expiration Date 06/26/17
By
Miami-Dade Product Control

Date: 01/28/12
Scale: NA
Design by: PPMF

Drawing Number
12-015

SHEET
5 of 13

FRAMING ANCHORAGE DETAILS

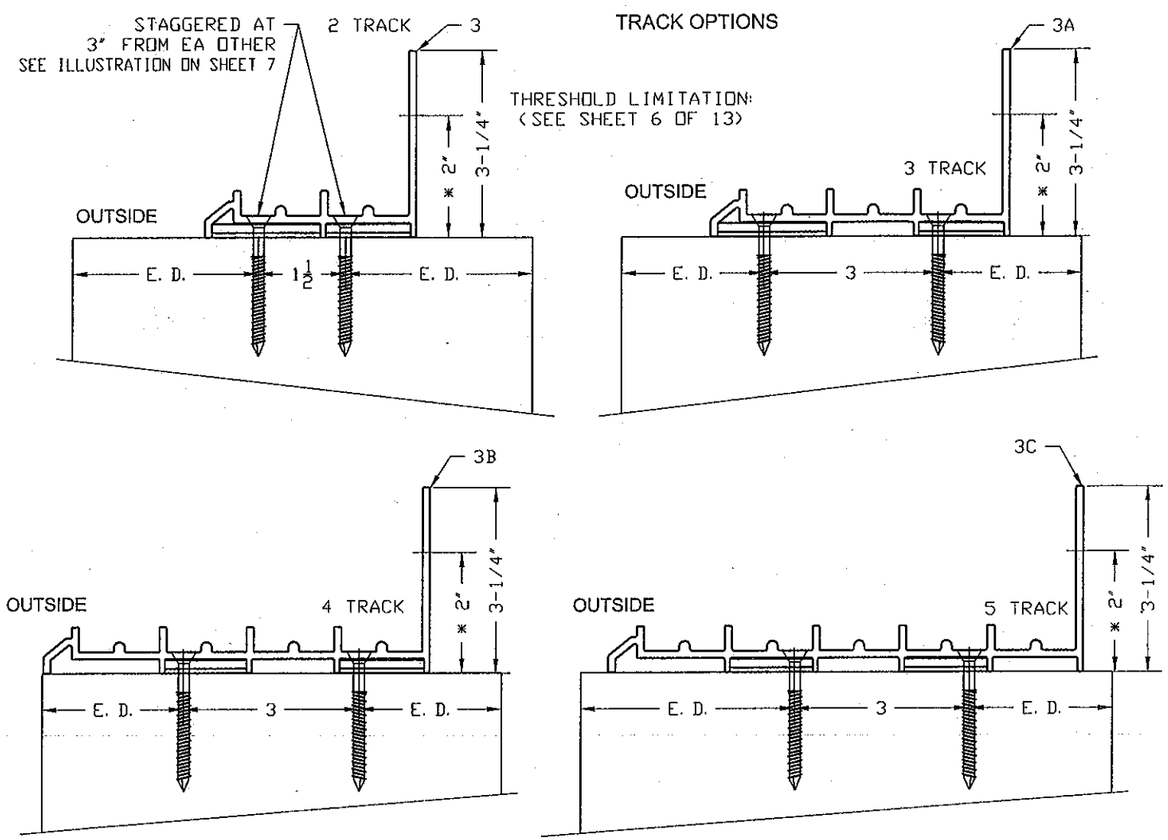

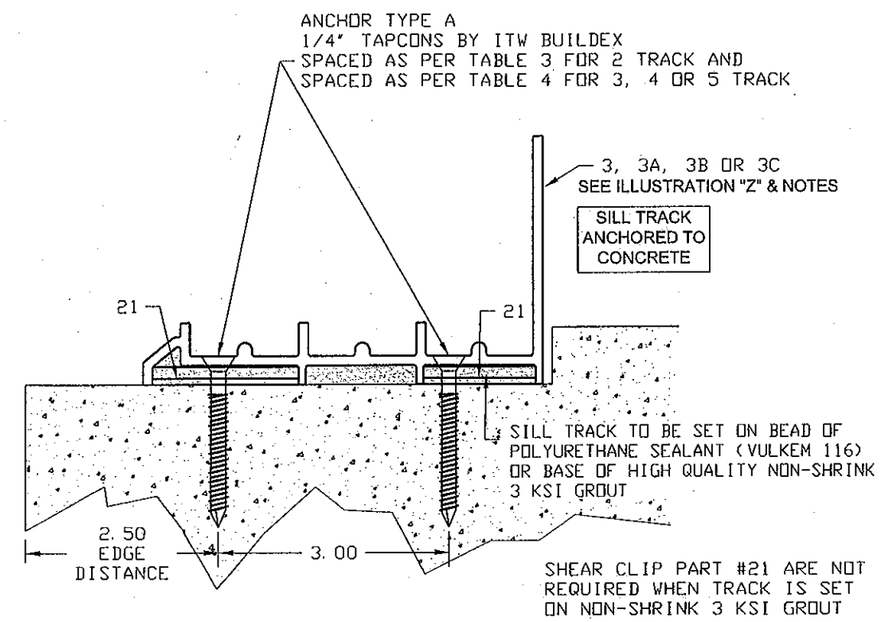

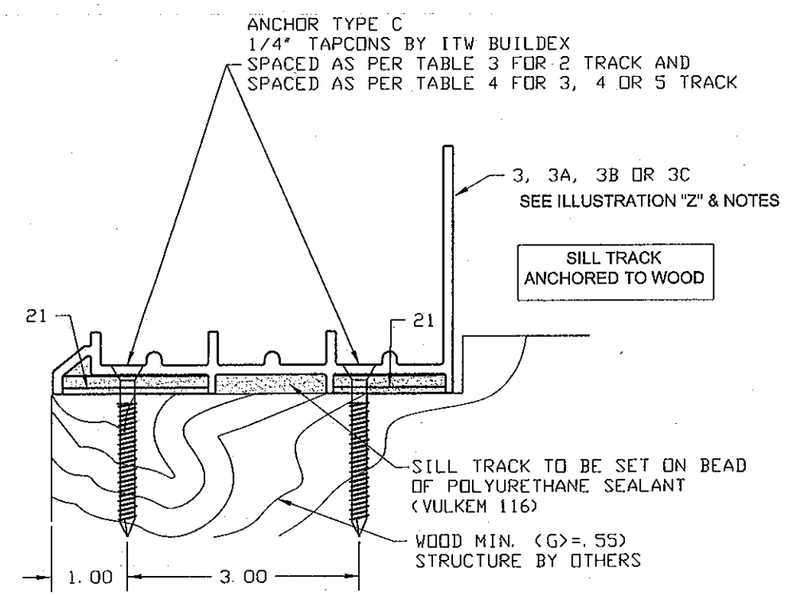

ILLUSTRATION "Z" & NOTES

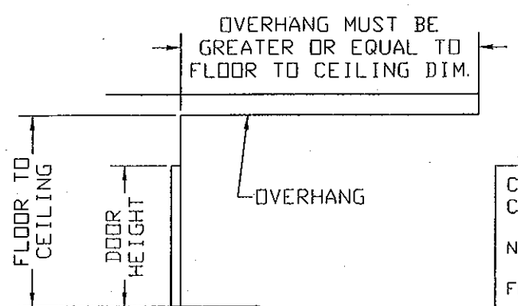

THRESHOLD TYPE	MAXIMUM PRESSURES (PSF)	
	CASE 1	CASE 2
3-1/4"	+90	+90
2"	+90	+50

CASE 1- DOORS W/ OVERHANG AS PER ILLUSTRATION "Z"
CASE 2- DOORS WITHOUT OVERHANG

NOTES:
1- THE ABOVE POSITIVE PRESSURES ARE THE MAXIMUM FOR 3-1/4" OR 2" THRESHOLD.
2- USE THE LESSER OF THE ABOVE POSITIVE PRESSURE AND THE POSITIVE PRESSURES FROM TABLES 1, 1A OR 2

MANUFACTURER:

SOUTHEASTERN
Manufacturers of Impact Resistant Sliding Glass Doors

1505 COMMERCE LANE, P.O. BOX 794
JUPITER, FLORIDA 33458
PHONE: (561) 746-5493
FAX: (561) 575-1826

PRODUCT:
ATLAS PLUS
SERIES 5000 ALUMINUM
SLIDING GLASS DOOR
SMALL MISSILE IMPACT

Engineering:
EngCo Inc.
CA 8116
5595 Orange Dr. 201
Davie, Fl. 33314
Tel.: (954) 585-0304
Fax: (954) 585-0305
ENGCOINC@AOL.COM

PEDRO M. DE FIGUEIREDO
LICENSE
No. 52609
STATE OF FLORIDA
MAY 03 2012
PROFESSIONAL ENGINEER
Engineer Seal
Pedro De Figueiredo
PE 52609

MIAMI-DADE BCCO:

PRODUCT REVISED
in complying with the Florida Building Code
Acceptance No. 12-0223.04
Expiration Date 06/22/13
By
Miami Dade Product Control

Date: 01/28/12
Scale: NA
Design by: PPMF

Drawing Number
12-015

DOOR FRAMING

HEADER TRACK ANCHORED TO WOOD

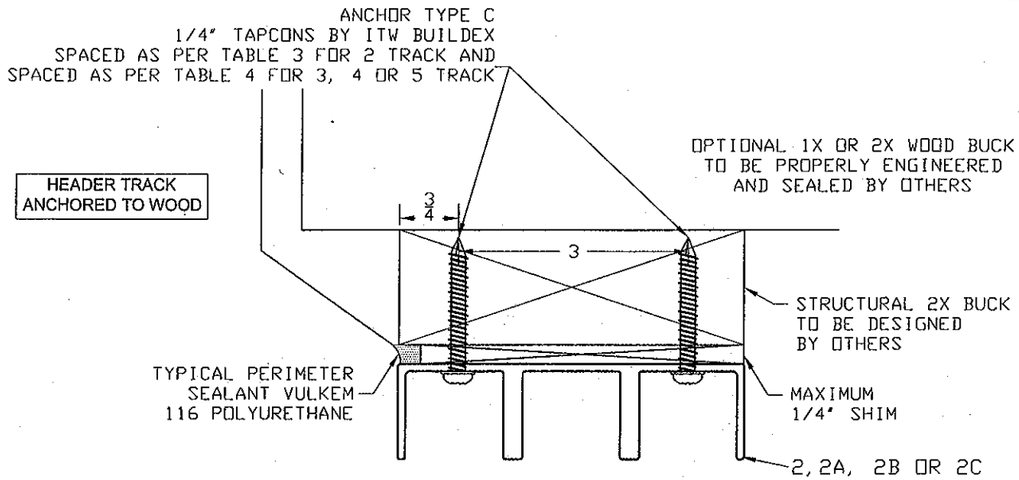

HEADER TRACK ANCHORED TO CONCRETE

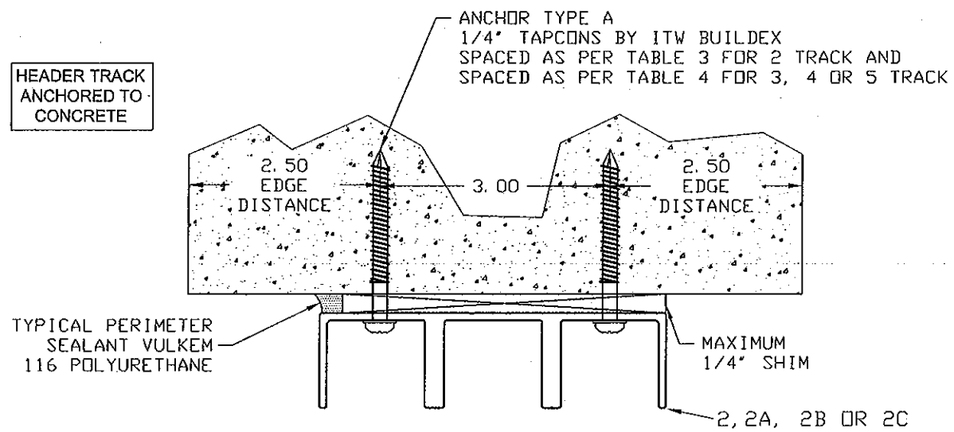

HEADER TRACK ANCHORED TO METAL STRUCTURE

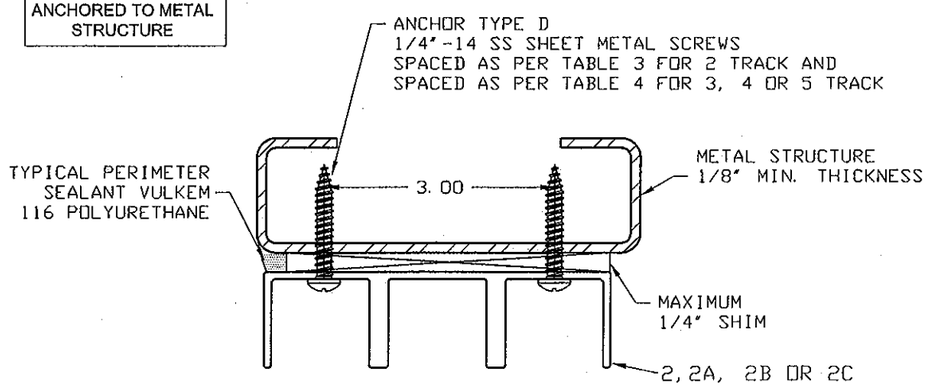

TRACK OPTIONS

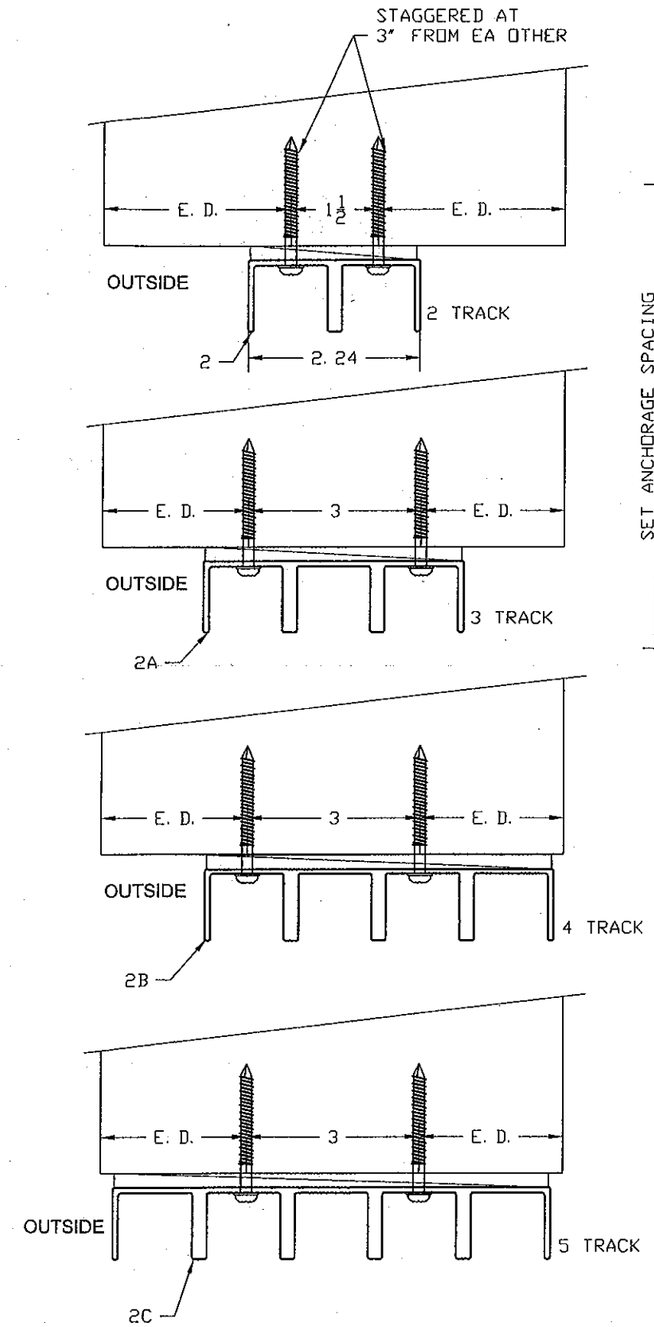

ANCHORAGE TOP VIEW
LAY-OUT APPLICABLE ONLY
FOR TWO TRACK SYSTEM

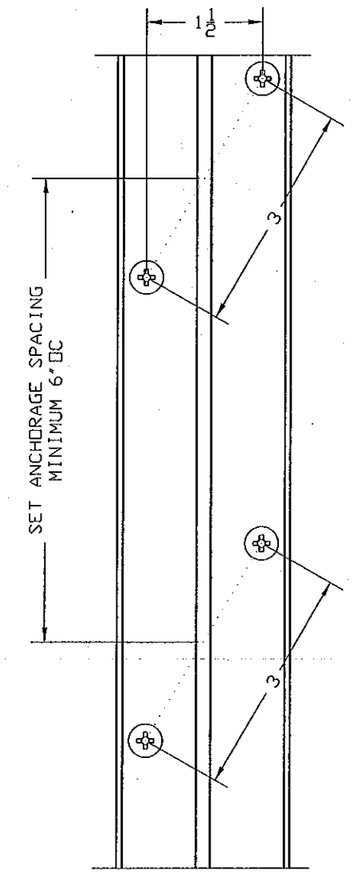

MANUFACTURER:

SOUTHEASTERN

Manufacturers of Impact Resistant Sliding Glass Doors

1505 COMMERCE LANE, P.O. BOX 794
JUPITER, FLORIDA 33458
PHONE: (561) 746-5493
FAX: (561) 575-1826

PRODUCT:

ATLAS PLUS

SERIES 5000 ALUMINUM
SLIDING GLASS DOOR
SMALL MISSILE IMPACT

Engineering:

EngCo Inc.

CA 8116
5595 Orange Dr. 201
Davie, Fl. 33314
Tel.: (954) 585-0304
Fax: (954) 585-0305
ENGCO@AOL.COM

PEDRO M. DE FIGUEIREDO
LICENSE
No. 52609
MAY 0 9 2012
STATE OF FLORIDA
PROFESSIONAL ENGINEER
Pedro De Figueiredo

MIAMI-DADE BCCO:

PRODUCT REVISED
as complying with the Florida Building Code
Acceptance No. 12-0223.04
Expiration Date 06/26/13
By
Miami Dade Product Control

Date: 01/28/12
Scale: NA
Design by: PPMF

Drawing Number
12-015

SHEET
7 of 13

FRAMING ANCHORAGE RATING AND SCHEDULE

TABLE 3 - (2 TRACK FRAMING) ANCHORAGE CAPACITY IN PSF
FUNCTION OF ANCHOR TYPE AND NUMBER OF CLUSTERS

ANCHOR TYPE		A			C			D	
MODULE WIDTH	FRAME HEIGHT	1	2	3	1	2	3	1	2
30	80	86.6	100.0	100.0	55.0	100.0	100.0	100.0	100.0
	84	82.5	100.0	100.0	52.3	100.0	100.0	100.0	100.0
	96	72.2	100.0	100.0	45.8	91.6	100.0	100.0	100.0
	100	69.3	100.0	100.0	44.0	87.9	100.0	100.0	100.0
	104	66.6	97.6	97.6	42.3	84.6	97.6	97.6	97.6
	108	64.2	83.7	83.7	40.7	81.4	83.7	83.7	83.7
	120	54.6	54.6	54.6	36.6	54.6	54.6	54.6	54.6
36	80	72.2	100.0	100.0	45.8	91.6	100.0	100.0	100.0
	84	68.8	100.0	100.0	43.6	87.2	100.0	100.0	100.0
	96	60.2	100.0	100.0	38.2	76.3	100.0	93.3	100.0
	100	57.8	100.0	100.0	36.6	73.3	100.0	89.6	100.0
	104	55.5	100.0	100.0	35.2	70.5	100.0	86.2	100.0
	108	53.5	85.7	85.7	33.9	67.9	85.7	83.0	85.7
	120	48.1	55.8	55.8	30.5	55.8	55.8	55.8	55.8
42	80	61.9	100.0	100.0	39.3	78.5	100.0	96.0	100.0
	84	58.9	100.0	100.0	37.4	74.8	100.0	91.4	100.0
	96	51.6	100.0	100.0	32.7	65.4	98.1	80.0	100.0
	100	49.5	99.0	100.0	31.4	62.8	94.2	76.8	100.0
	104	47.6	87.3	87.3	30.2	60.4	87.3	73.8	87.3
	108	45.8	74.7	74.7	29.1	58.2	74.7	71.1	74.7
	120	41.3	48.4	48.4	26.2	48.4	48.4	48.4	48.4
48	80	54.2	100.0	100.0	34.4	68.7	100.0	84.0	100.0
	84	51.6	100.0	100.0	32.7	65.4	98.1	80.0	100.0
	88	49.2	98.5	100.0	31.2	62.5	93.7	76.4	100.0
	92	47.1	94.2	100.0	29.9	59.7	89.6	73.0	100.0
	96	45.1	90.3	100.0	28.6	57.3	85.9	70.0	100.0
	100	43.3	86.6	91.9	27.5	55.0	82.4	67.2	91.9
	104	41.7	78.0	78.0	26.4	52.8	78.0	64.6	78.0
	105	41.1	73.4	73.4	26.0	52.1	73.4	63.7	73.4
52	80	50.0	100.0	100.0	31.7	63.4	95.1	77.5	100.0
	84	47.6	95.2	100.0	30.2	60.4	90.6	73.8	100.0
	88	45.4	90.9	100.0	28.8	57.7	86.5	70.5	100.0
	97.5	41.0	82.0	96.0	26.0	52.0	78.0	63.6	96.0
60	80	43.3	86.6	98.3	27.5	55.0	82.4	67.2	98.3
	82	42.3	84.5	97.3	26.8	53.6	80.4	65.6	97.3
	84	41.3	82.5	96.0	26.2	52.3	78.5	64.0	96.0

NUMBER OF CLUSTERS (n)

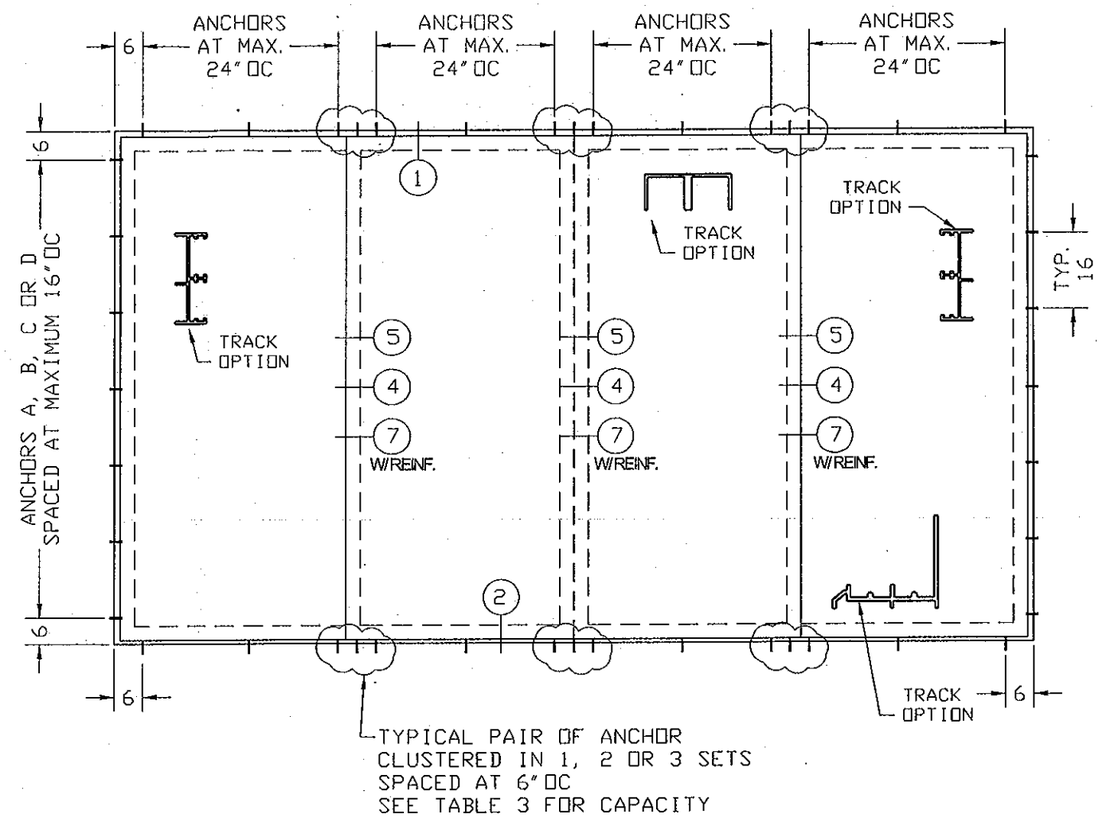

TABLE 3 EXAMPLE:

DOOR MODULE= 48" -- FRAME HEIGHT= 96"
HEADER & SILL ANCHOR TYPE A:
WITH 1 CLUSTER - MAXIMUM PRESSURE PD= ± 45.1 PSF
WITH 2 CLUSTER - MAXIMUM PRESSURE PD= ± 90.3 PSF
WITH 3 CLUSTER - MAXIMUM PRESSURE PD= ±100.0 PSF

ANCHOR TYPES:	MINIMUM EDGE DISTANCE (E.D.)
A- 1/4" TAPCON BY ITW WITH 1 3/4" MIN. EMBEDMENT INTO 3000 psi CONCRETE	2 1/2"
B- 1/4" TAPCON BY ITW WITH 1 1/4" MIN. EMBEDMENT INTO HOLLOW BLOCK	2 1/2"
C- 1/4" TAPCON BY ITW WITH 1 1/2" MIN. EMBEDMENT INTO PT WOOD (SG=.55)	3/4"
D- 1/4-14 SS SHEET METAL SCREWS INTO 1/8" METAL STRUCTURES	1/2"

NOTES:
1- MINIMUM EMBEDMENT ARE BEYOND WALL DRESSING.
2- TAPCONS WITH FLAT, HEX AND/OR PAN HEADS CAN BE USED.
3- METAL STRUCTURES ARE ASTM A36 STEEL OR 6063-T6 ALUMINUM
4- ANCHOR TYPE D MUST HAVE A MINIMUM 3 THREADS EMBEDMENT

MANUFACTURER:
SOUTHEASTERN
Manufacturers of Impact Resistant Sliding Glass Doors
1505 COMMERCE LANE, P.O. BOX 794
JUPITER, FLORIDA 33458
PHONE: (561) 746-5493
FAX: (561) 575-1826

PRODUCT:
ATLAS PLUS
SERIES 5000 ALUMINUM SLIDING GLASS DOOR
SMALL MISSILE IMPACT

Engineering:
EngCo Inc.
CA 8116
5595 Orange Dr. 201
Davie, Fl. 33314
Tel.: (954) 585-0304
Fax: (954) 585-0305
ENGCO@AOL.COM

PEDRO M. DE FIGUEIREDO LICENSE No. 52609 STATE OF FLORIDA PROFESSIONAL ENGINEER
MAY 03 2012
Engineer Seal
Pedro M. Figueiredo
PE 52609

MIAMI-DADE BCCO:

PRODUCT REVISED
as complying with the Florida Building Code
Acceptance No. 12-0223.04
Expiration Date 06/26/13
By
Miami Dade Product Control

Date: 01/28/12
Scale: NA
Design by: PPMF

Drawing Number
12-015

SHEET
8 of 13

FRAMING ANCHORAGE SELECTION

TABLE 4 - (3, 4 OR 5 TRACK FRAMING) ANCHORAGE CAPACITY IN PSF
FUNCTION OF ANCHOR TYPE AND NUMBER OF CLUSTERS

ANCHOR TYPE		A			C			D	
MODULE WIDTH	FRAME HEIGHT	1	2	3	1	2	3	1	2
30	80	86.6	100.0	100.0	55.0	100.0	100.0	100.0	100.0
	84	82.5	100.0	100.0	52.3	100.0	100.0	100.0	100.0
	96	72.2	100.0	100.0	45.8	91.6	100.0	100.0	100.0
	100	69.3	100.0	100.0	44.0	87.9	100.0	100.0	100.0
	104	66.6	97.6	97.6	42.3	84.6	97.6	97.6	97.6
	108	64.2	83.7	83.7	40.7	81.4	83.7	83.7	83.7
	120	54.6	54.6	54.6	36.6	54.6	54.6	54.6	54.6
36	80	72.2	100.0	100.0	45.8	91.6	100.0	100.0	100.0
	84	68.8	100.0	100.0	43.6	87.2	100.0	100.0	100.0
	96	60.2	100.0	100.0	38.2	76.3	100.0	93.3	100.0
	100	57.8	100.0	100.0	36.6	73.3	100.0	89.6	100.0
	104	55.5	100.0	100.0	35.2	70.5	100.0	86.2	100.0
	108	53.5	85.7	85.7	33.9	67.9	85.7	83.0	85.7
	120	48.1	55.8	55.8	30.5	55.8	55.8	55.8	55.8
42	80	61.9	100.0	100.0	39.3	78.5	100.0	96.0	100.0
	84	58.9	100.0	100.0	37.4	74.8	100.0	91.4	100.0
	96	51.6	100.0	100.0	32.7	65.4	98.1	80.0	100.0
	100	49.5	99.0	100.0	31.4	62.8	94.2	76.8	100.0
	104	47.6	87.3	87.3	30.2	60.4	87.3	73.8	87.3
	108	45.8	74.7	74.7	29.1	58.2	74.7	71.1	74.7
	120	41.3	48.4	48.4	26.2	48.4	48.4	48.4	48.4
48	80	54.2	100.0	100.0	34.4	68.7	100.0	84.0	100.0
	84	51.6	100.0	100.0	32.7	65.4	98.1	80.0	100.0
	88	49.2	98.5	100.0	31.2	62.5	93.7	76.4	100.0
	92	47.1	94.2	100.0	29.9	59.7	89.6	73.0	100.0
	96	45.1	90.3	100.0	28.6	57.3	85.9	70.0	100.0
	100	43.3	86.6	91.9	27.5	55.0	82.4	67.2	91.9
	104	41.7	78.0	78.0	26.4	52.8	78.0	64.6	78.0
	105	41.1	73.4	73.4	26.0	52.1	73.4	63.7	73.4
52	80	50.0	100.0	100.0	31.7	63.4	95.1	77.5	100.0
	84	47.6	95.2	100.0	30.2	60.4	90.6	73.8	100.0
	88	45.4	90.9	100.0	28.8	57.7	86.5	70.5	100.0
	97.5	41.0	82.0	.96.0	26.0	52.0	78.0	63.6	96.0
60	80	43.3	86.6	98.3	27.5	55.0	82.4	67.2	98.3
	82	42.3	84.5	97.3	26.8	53.6	80.4	65.6	97.3
	84	41.3	82.5	96.0	26.2	52.3	78.5	64.0	96.0

NUMBER OF CLUSTERS (n)

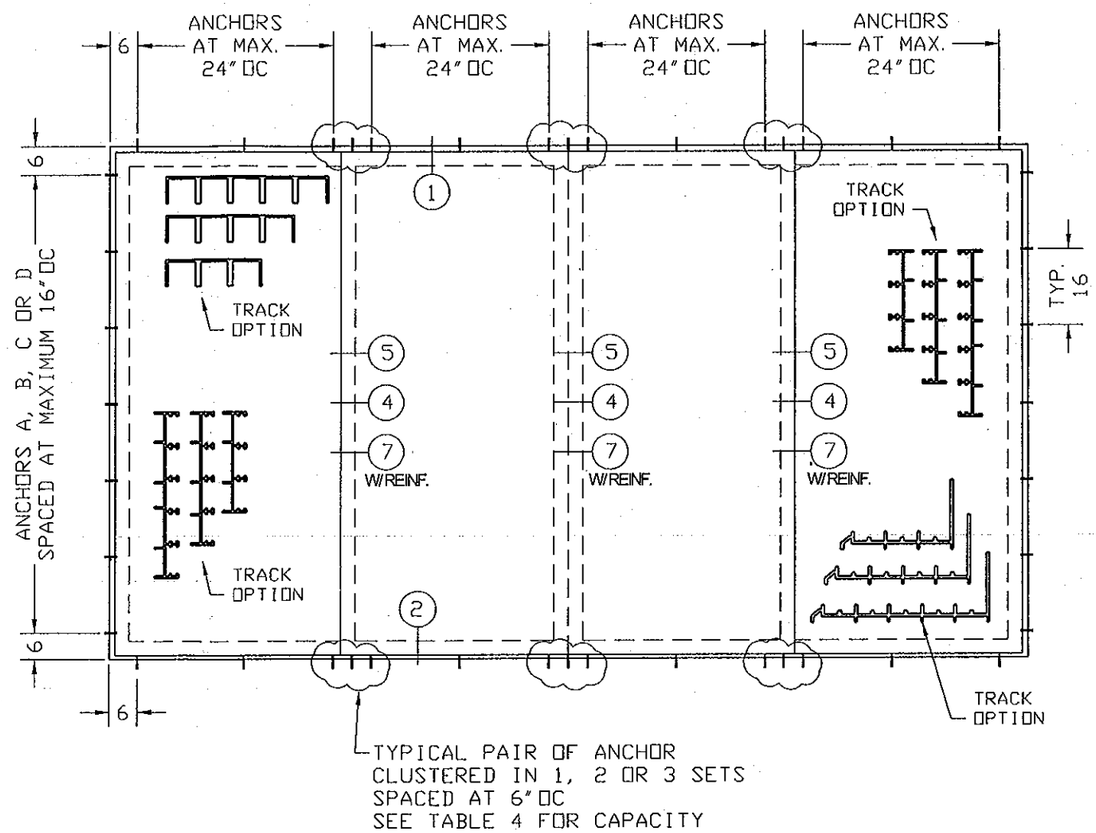

TABLE 4 EXAMPLE:

DOOR MODULE= 48" -- FRAME HEIGHT= 96"
HEADER & SILL ANCHOR TYPE A:
WITH 1 CLUSTER - MAXIMUM PRESSURE PD= ±45.1 PSF
WITH 2 CLUSTER - MAXIMUM PRESSURE PD= ±90.3 PSF
WITH 3 CLUSTER - MAXIMUM PRESSURE PD= ±100 PSF

ANCHOR TYPES:	MINIMUM EDGE DISTANCE (E.D.)
A- 1/4" TAPCON BY ITW WITH 1 3/4" MIN. EMBEDMENT INTO 3000 psi CONCRETE	2 1/2"
B- 1/4" TAPCON BY ITW WITH 1 1/4" MIN. EMBEDMENT INTO HOLLOW BLOCK	2 1/2"
C- 1/4" TAPCON BY ITW WITH 1 1/2" MIN. EMBEDMENT INTO PT WOOD (SG=.55)	3/4"
D- 1/4-14 SS SHEET METAL SCREWS INTO 1/8" METAL STRUCTURES	1/2"

NOTES:
1- MINIMUM EMBEDMENT ARE BEYOND WALL DRESSING.
2- TAPCONS WITH FLAT, HEX AND/OR PAN HEADS CAN BE USED.
3- METAL STRUCTURES ARE ASTM A36 STEEL OR 6063-T6 ALUMINUM
4- ANCHOR TYPE D MUST HAVE A MINIMUM 3 THREADS EMBEDMENT

MANUFACTURER:
SOUTHEASTERN
Manufacturers of Impact Resistant Sliding Glass Doors
1505 COMMERCE LANE, P.O. BOX 794
JUPITER, FLORIDA 33458
PHONE: (561) 746-5493
FAX: (561) 575-1826

PRODUCT:
ATLAS PLUS
SERIES 5000 ALUMINUM SLIDING GLASS DOOR
SMALL MISSILE IMPACT

Engineering:
EngCo Inc.
CA 8116
5595 Orange Dr. 201
Davie, Fl. 33314
Tel.: (954) 585-0304
Fax: (954) 585-0305
ENGCO@AOL.COM

PEDRO M. DE FIGUEIREDO LICENSE No. 52609 MAY 03 2012 STATE OF FLORIDA PROFESSIONAL ENGINEER
Engineer Seal:
Pedro M. Figueiredo
PE-52609

MIAMI-DADE BCCO:

PRODUCT REVISED
as complying with the Florida Building Code
Acceptance No. 12-0223.04
Expiration Date 06/26/13
By
Miami Dade Product Control

Date: 01/28/12
Scale: NA
Design by: PPMF

Drawing Number
12-015

DOOR FRAMING

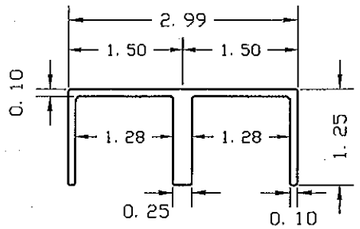

2- TWO TRACK HEADER
ALLOY: 6063-T6

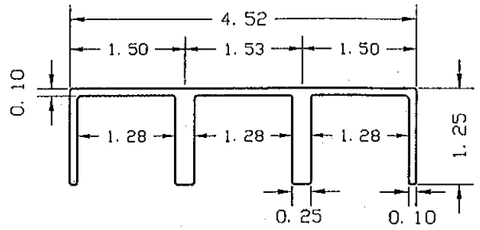

2A- THREE TRACK HEADER
ALLOY: 6063-T6

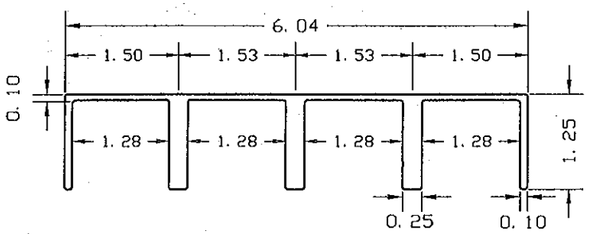

2B- FOUR TRACK HEADER
ALLOY: 6063-T6

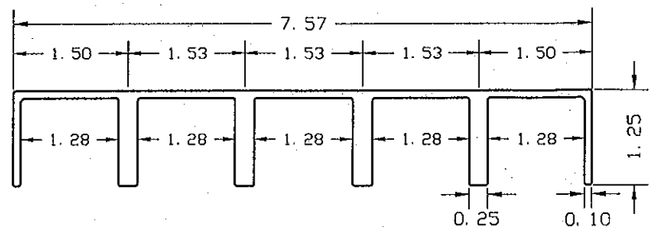

2C- FIVE TRACK HEADER
ALLOY: 6063-T6

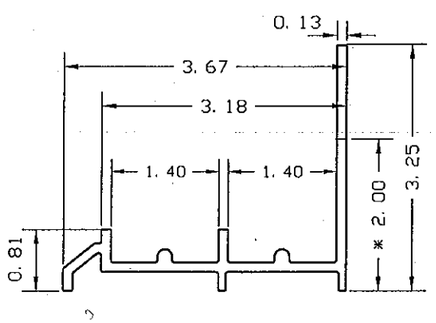

3- 3-1/4" TWO TRACK SILL
ALLOY: 6063-T6
* 2" THRESHOLD LIMITED TO +50 PSF

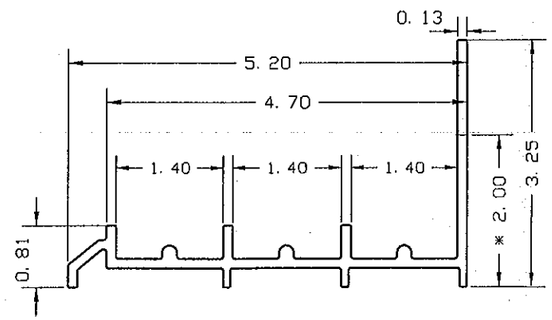

3A- 3-1/4" THREE TRACK SILL
ALLOY: 6063-T6
* 2" THRESHOLD LIMITED TO +50 PSF

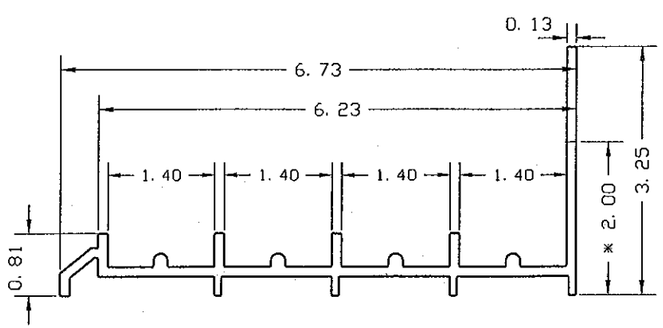

3B- 3-1/4" FOUR TRACK SILL
ALLOY: 6063-T6
* 2" THRESHOLD LIMITED TO +50 PSF

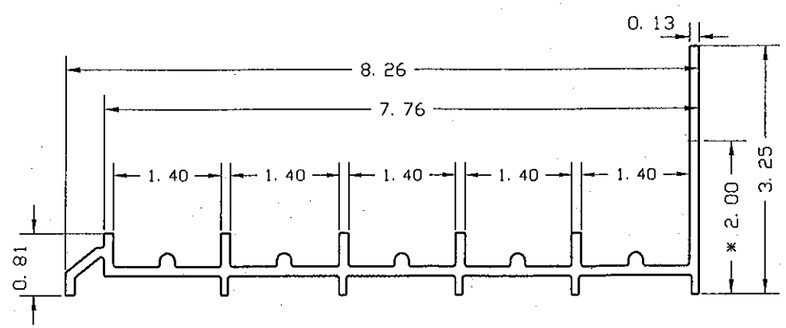

3C- 3-1/4" FIVE TRACK SILL
ALLOY: 6063-T6
* 2" THRESHOLD LIMITED TO +50 PSF

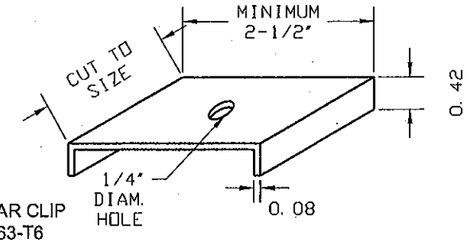

21- JAMB SHEAR CLIP
ALUMINUM 6063-T6

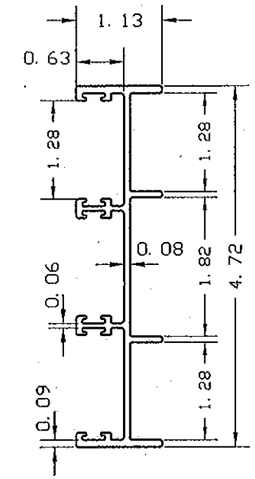

1A- THREE TRACK JAMB
ALLOY: 6063-T6

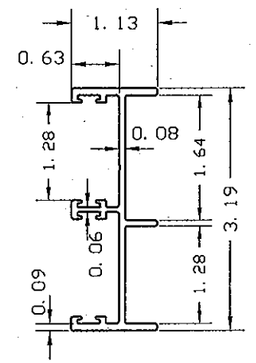

1- TWO TRACK JAMB
ALLOY: 6063-T6

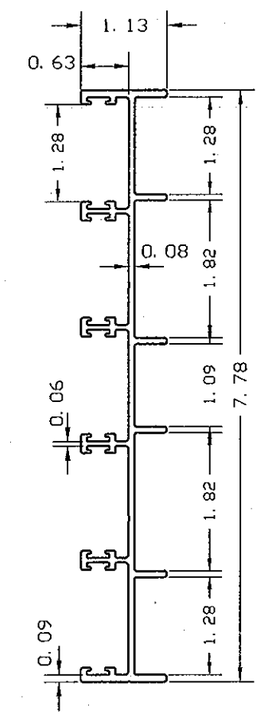

1C- FIVE TRACK JAMB
ALLOY: 6063-T6

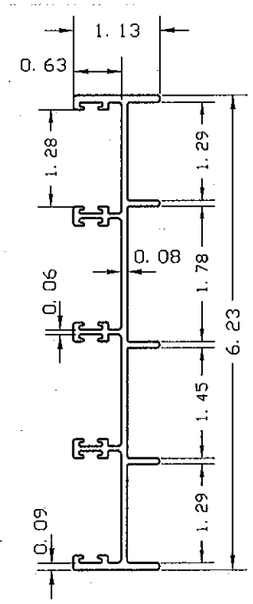

1B- FOUR TRACK JAMB
ALLOY: 6063-T6

MANUFACTURER:

SOUTHEASTERN
Manufacturers of Impact Resistent Sliding Glass Doors

1505 COMMERCE LANE, P.O.
BOX 794
JUPITER, FLORIDA 33458
PHONE: (561) 746-5493
FAX: (561) 575-1826

PRODUCT:
ATLAS PLUS
SERIES 5000 ALUMINUM
SLIDING GLASS DOOR
SMALL MISSILE IMPACT

Engineering:
EngCo Inc.
CA 8116
5595 Orange Dr. 201
Davie, Fl. 33314
Tel.: (954) 585-0304
Fax: (954) 585-0305
ENGCO@AOL.COM

PEDRO M. DE FIGUEIREDO
LICENSE
No. 52609
MAY 08 2012
STATE OF
PROFESSIONAL ENGINEER
Engineer Seal
Pedro M. Figueiredo
PE 52609

MIAMI-DADE BCCO:

PRODUCT REVISED
as complying with the Florida
Building Code
Acceptance No. 12-0223.04
Expiration Date 06/26/13
By
Miami Dade Product Control

Date: 01/28/12
Scale: NA
Design by: PPMF

Drawing Number
12-015

SHEET
10 of 13

DOOR PANEL COMPONENTS & BILLOF MATERIALS

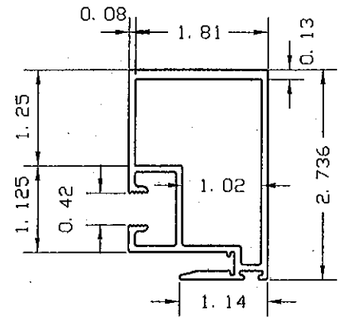

4- ATLAS INTERLOCK
ALLOY: 6063-T6

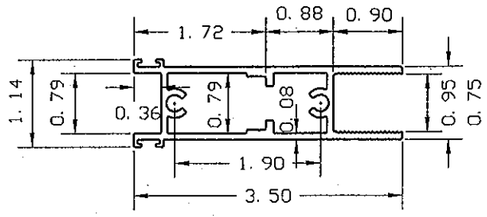

5- DOOR TOP RAIL
ALLOY: 6063-T6
ONLY ON OPERABLE PANELS

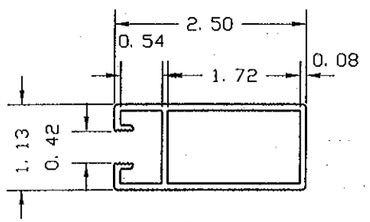

9- DOOR END RAIL
ALLOY: 6063-T6

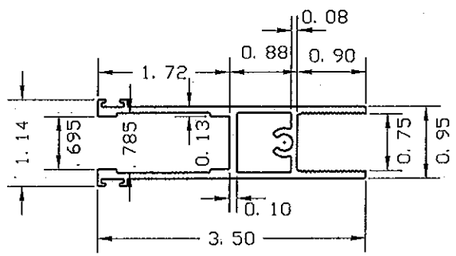

8- DOOR BOTTOM RAIL
ALLOY: 6063-T6

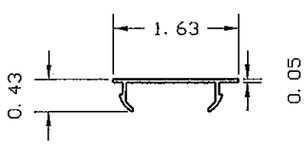

12- OPTIONAL FRAME
SNAP COVER
ALLOY: 6063-T6

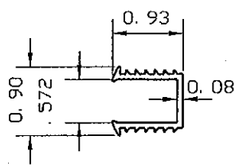

13- GLAZING GASKET
EXTRUDED PVC 75 DUROMETER
MARINE GASKET PART# 992
MADE BY TEAM PLASTICS, INC.

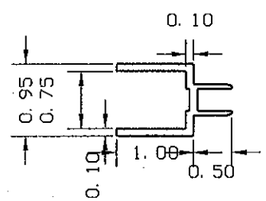

11- GLAZING ADAPTER
ALLOY: 6063-T5

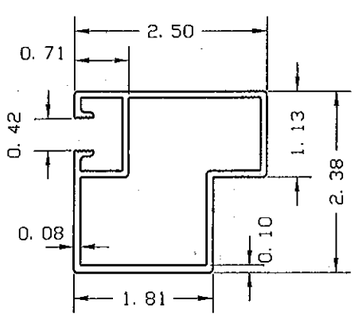

6- ATLAS END RAIL
ALLOY: 6063-T6

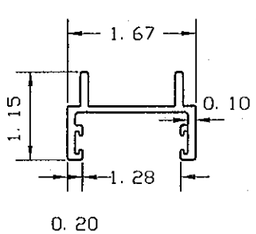

7- ATLAS DOOR ASTRAGAL
ALLOY: 6063-T6

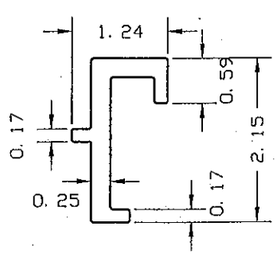

20- ATLAS INTERLOCK
REINFORCEMENT - 6063-T6

BILL OF MATERIALS

#	DESCRIPTION	MATERIAL	SUPPLIER
1	TWO TRACK JAMB	ALUMINUM 6063-T6	SOUTHEASTERN DOOR COMPANY
1A	THREE TRACK JAMB	ALUMINUM 6063-T6	SOUTHEASTERN DOOR COMPANY
1B	FOUR TRACK JAMB	ALUMINUM 6063-T6	SOUTHEASTERN DOOR COMPANY
1C	FIVE TRACK JAMB	ALUMINUM 6063-T6	SOUTHEASTERN DOOR COMPANY
2	TWO TRACK HEADER	ALUMINUM 6063-T6	SOUTHEASTERN DOOR COMPANY
2A	THREE TRACK HEADER	ALUMINUM 6063-T6	SOUTHEASTERN DOOR COMPANY
2B	FOUR TRACK HEADER	ALUMINUM 6063-T6	SOUTHEASTERN DOOR COMPANY
2C	FIVE TRACK HEADER	ALUMINUM 6063-T6	SOUTHEASTERN DOOR COMPANY
3	TWO TRACK SILL	ALUMINUM 6063-T6	SOUTHEASTERN DOOR COMPANY
3A	THREE TRACK SILL	ALUMINUM 6063-T6	SOUTHEASTERN DOOR COMPANY
3B	FOUR TRACK SILL	ALUMINUM 6063-T6	SOUTHEASTERN DOOR COMPANY
3C	FIVE TRACK SILL	ALUMINUM 6063-T6	SOUTHEASTERN DOOR COMPANY
4	ATLAS INTERLOCK	ALUMINUM 6063-T6	SOUTHEASTERN DOOR COMPANY
5	DOOR TOP RAIL	ALUMINUM 6063-T6	SOUTHEASTERN DOOR COMPANY
6	ATLAS END RAIL	ALUMINUM 6063-T6	SOUTHEASTERN DOOR COMPANY
7	ATLAS DOOR ASTRAGAL	ALUMINUM 6063-T6	SOUTHEASTERN DOOR COMPANY
8	DOOR BOTTOM RAIL	ALUMINUM 6063-T6	SOUTHEASTERN DOOR COMPANY
9	DOOR END RAIL	ALUMINUM 6063-T6	SOUTHEASTERN DOOR COMPANY
10	1/4" PILE WEATHER-STRIP	PILE W31255BNG	ULTRAFAB
11	GLAZING ADAPTER	ALUMINUM 6063-T5	SOUTHEASTERN DOOR COMPANY
12	OPTIONAL SNAP COVER	ALUMINUM 6063-T5	SOUTHEASTERN DOOR COMPANY
13	GLAZING GASKET	EXTRUDED VINYL	TEAM PLASTIC
17	1 11/16" DIAM. ROLLER	TANDEM ROLLER	AMESBURY
17A	1 11/16" DIAM. ROLLER	SINGLE ROLLER	AMESBURY
18	#2815-84	MULTI-POINT LOCK	AMESBURY
19	#2470-84	KEEPER	AMESBURY
20	ATLAS INTERLOCK REINF. (FULL LENGTH)	ALUMINUM 6063-T6	SOUTHEASTERN DOOR COMPANY
21	JAMB SHEAR CLIP	ALUMINUM 6063-T6	SOUTHEASTERN DOOR COMPANY
22	SEALANT VULKEN 116	POLYURETHANE	TREMCO

WEATHER STRIPPING

OPERABLE PANELS		
W1	INTERLOCK STILE	ULTRAFAB W31205 SINGLE FIN 3/8" PILE HEIGHT
W2	INTERLOCK STILE	0. 638x0. 382 TEAM PLASTICS BULB VINYL PART 191
W3	TOP RAIL	ULTRAFAB W31175 SINGLE FIN 3/8" PILE HEIGHT
W4	BOTTOM RAIL	ULTRAFAB W31255 SINGLE FIN 1/2" PILE HEIGHT
W5	ASTRAGAL	ULTRAFAB W31155BNG SINGLE FIN 3/8" PILE HEIGHT
FIXED PANELS		
W6	INTERLOCK STILE	ULTRAFAB W3426BNG SINGLE FIN 3/8" PILE HEIGHT
W2	INTERLOCK STILE	0. 638x0. 382 TEAM PLASTICS BULB VINYL PART 191
W3	TOP RAIL	ULTRAFAB W31175 SINGLE FIN 3/8" PILE HEIGHT
W4	BOTTOM RAIL	ULTRAFAB W31255 SINGLE FIN 1/2" PILE HEIGHT
FRAME		
W3	JAMB	ULTRAFAB W31175 SINGLE FIN 3/8" PILE HEIGHT
W7	SILL INT. WEEP HOLE	ORCO 1/2" WEEP DRAIN PAN PLUG PART#89080-2618

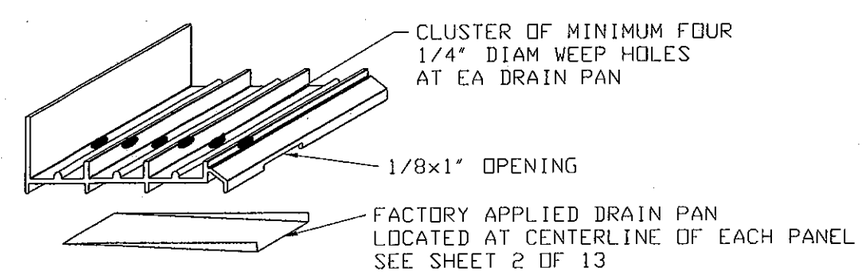

MANUFACTURER:

SOUTHEASTERN
Manufacturers of Impact Resistant Sliding Glass Doors

1505 COMMERCE LANE, P.O. BOX 794
JUPITER, FLORIDA 33458
PHONE: (561) 746-5493
FAX: (561) 575-1826

PRODUCT:
ATLAS PLUS
SERIES 5000 ALUMINUM
SLIDING GLASS DOOR
SMALL MISSILE IMPACT

Engineering:
EngCo Inc.
CA 8116
5595 Orange Dr. 201
Davie, Fl. 33314
Tel.: (954) 585-0304
Fax: (954) 585-0305
ENGCO@AOL.COM

PEDRO M. DE FIGUEIREDO
LICENSE
No. 52609
STATE OF FLORIDA
PROFESSIONAL ENGINEER

Engineer Seal
Pedro De Figueiredo
PE 52609

MIAMI-DADE BCCO:

PRODUCT REVISED
as complying with the Florida Building Code
Acceptance No. 12-0223.26
Expiration Date 06/26/13
By
Miami Dade Product Control

Date: 01/28/12
Scale: NA
Design by: PPMF

Drawing Number
12-015

SHEET
11 of 13

DOOR HARDWARE

18- DEADLOCK
1 MULTIPOINT MORTISE LOCK PER LOCK MEETING STILE
HARDWARE SUPPLIER: AMESBURY
PART #2815-84
ATTACHED TO THE DOOR WITH (2) #6X 1/4" SS FLAT HEAD SCREWS.

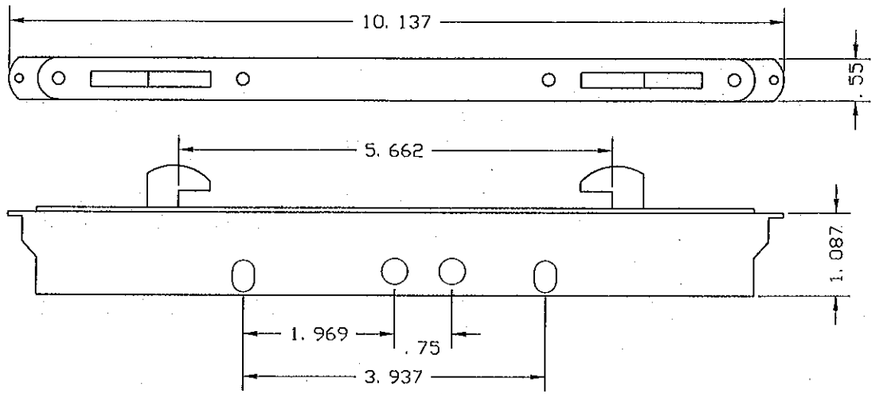

19 - STRIKE PLATE
1 KEEPER PER MEETING STILE OR JAMB
HARDWARE SUPPLIER: AMESBURY
PART #2470-84
ATTACHED AT JAMB OR ASTRAGAL RAIL
USING FOUR W/ #10-16X 1-1/2"PHSMS.

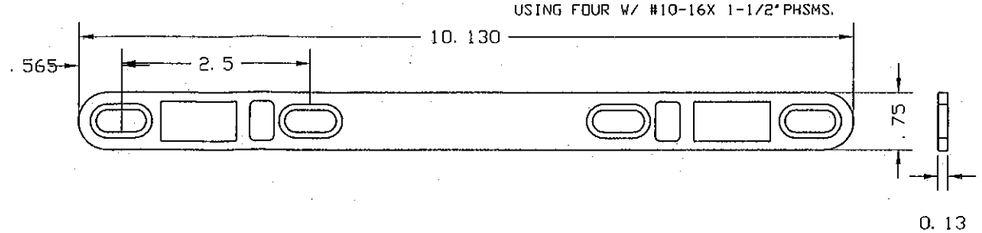

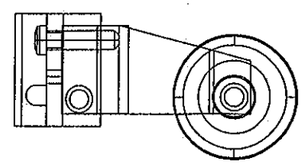

17A- SINGLE WHEEL ASSEMBLY
2 PER FIXED DOOR PANEL
HARDWARE SUPPLIER: AMESBURY
PART #1966-7000-12
ADJUSTABLE 1 11/16" DIAMETER NYLON ROLLER
ASSEMBLY WITH ALUMINUM HOUSING ATTACHED TO
THE BOTTOM RAIL USING ONE 1/4"X1 SS ROD.

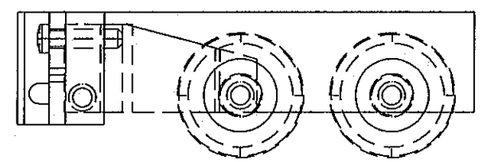

17- TANDEM WHEEL ASSEMBLY
2 PER OPERABLE DOOR PANEL
HARDWARE SUPPLIER: AMESBURY
PART #1966-7501-14
ADJUSTABLE 1 11/16" DIAMETER NYLON ROLLER
ASSEMBLY WITH ALUMINUM HOUSING ATTACHED TO
THE BOTTOM RAIL USING ONE 1/4"X1 SS ROD.

DOOR HARDWARE TYPICAL LOCATIONS

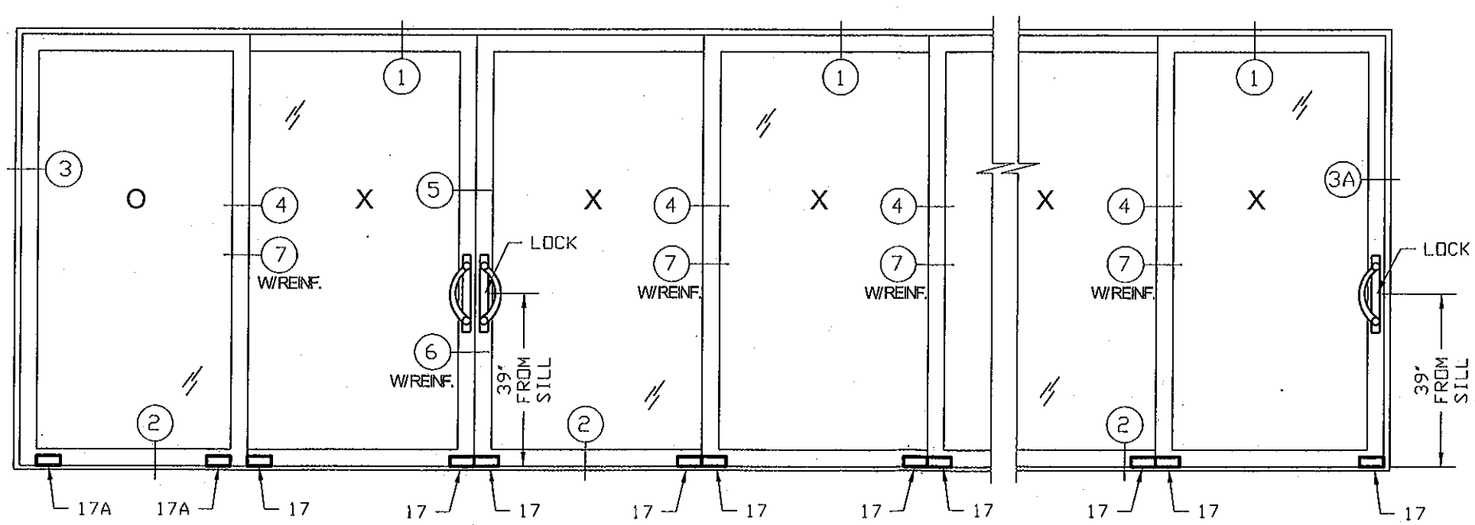

MANUFACTURER:
SOUTHEASTERN
Manufacturers of Impact Resistant Sliding Glass Doors
1505 COMMERCE LANE, P.O. BOX 794
JUPITER, FLORIDA 33458
PHONE: (561) 746-5493
FAX: (561) 575-1826

PRODUCT:
ATLAS PLUS
SERIES 5000 ALUMINUM SLIDING GLASS DOOR
SMALL MISSILE IMPACT

Engineering:
EngCo Inc.
CA 8116
5595 Orange Dr. 201
Davie, Fl. 33314
Tel.: (954) 585-0304
Fax: (954) 585-0305
ENGCO@AOL.COM

PEDRO M. DE FIGUEIREDO
LICENSE No. 52609
STATE OF FLORIDA
PROFESSIONAL ENGINEER
MAY 08 2012
Engineer Seal
Pedro M. de Figueiredo
PE 52609

MIAMI-DADE BCCO:

PRODUCT REVISED
in complying with the Florida Building Code
Acceptance No 12-0223.04
Expiration Date 06/22/13
By
Miami Dade Product Control

Date: 01/28/12
Scale: NA
Design by: PPMF

Drawing Number
12-015

DOOR CORNER ASSEMBLY

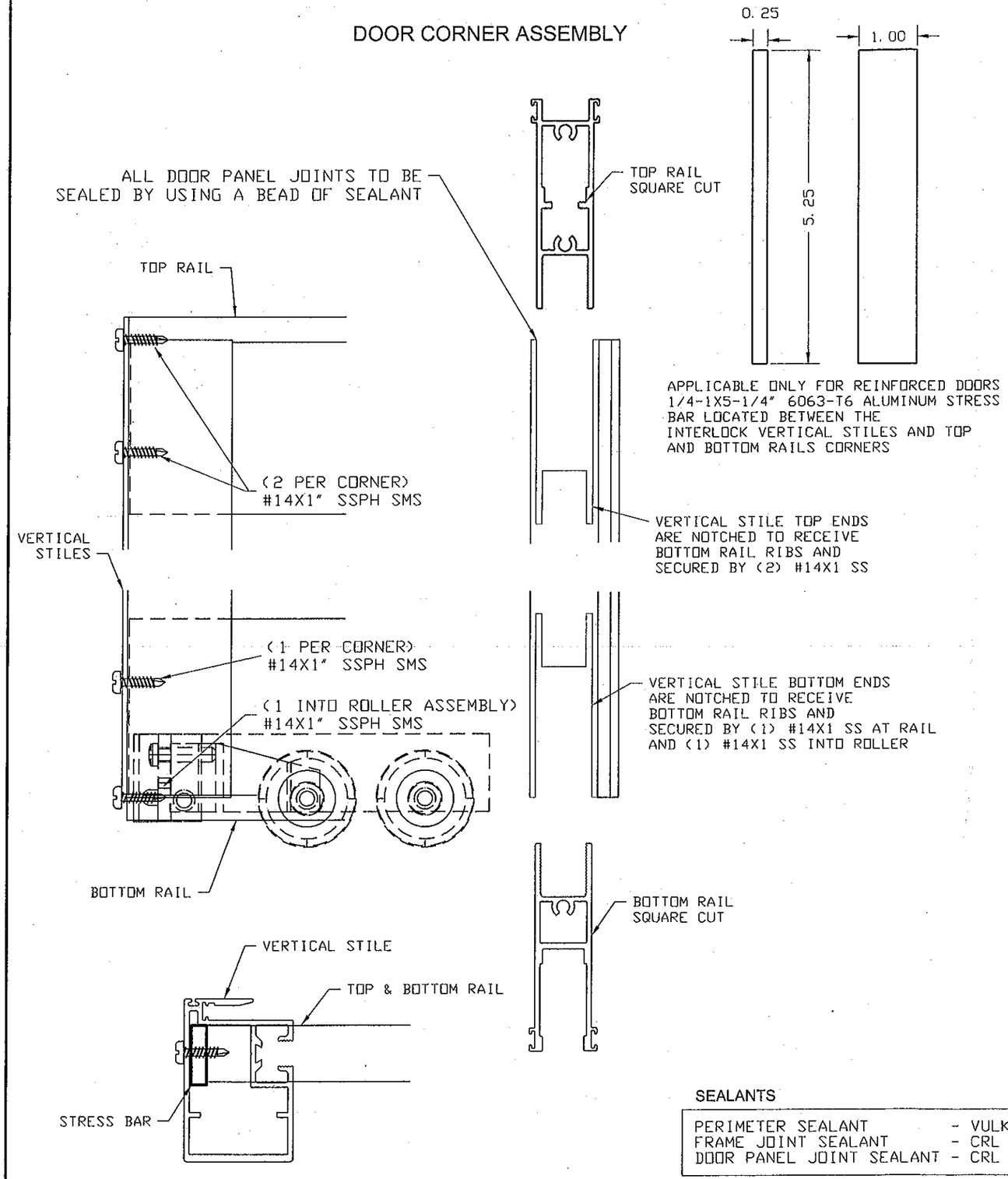

FRAMING CORNER ASSEMBLY

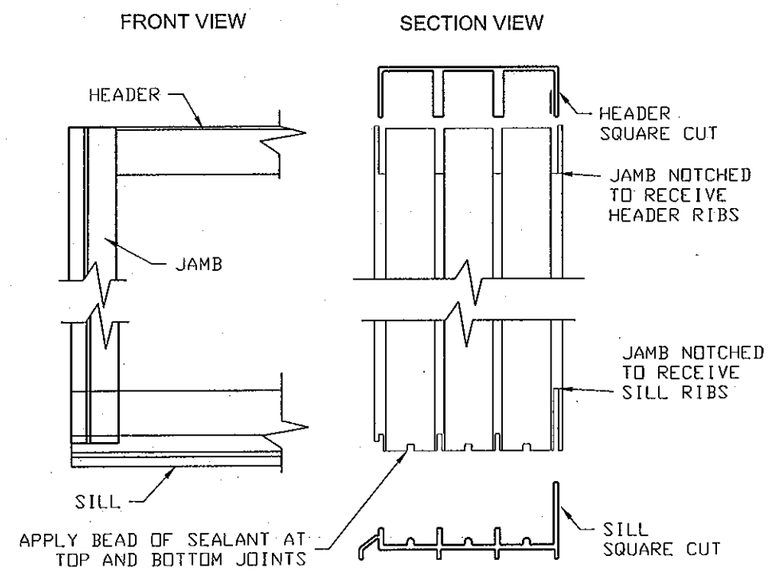

JAMB SHEAR CLIP ASSEMBLY

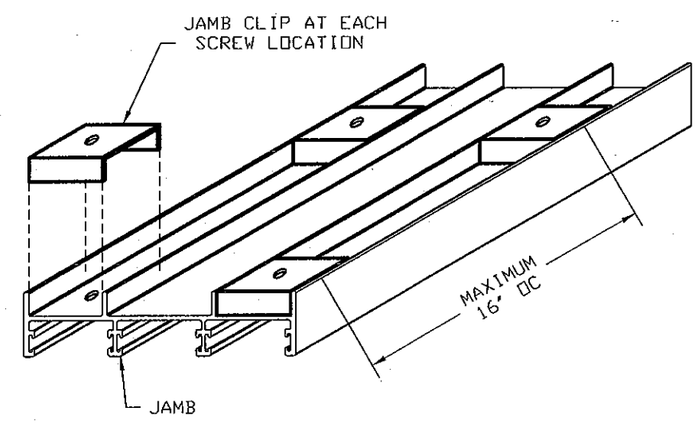

SEALANTS

PERIMETER SEALANT	- VULKEN 116 POLYURETHANE SEALANT
FRAME JOINT SEALANT	- CRL SILICONE OR VULKEN POLYURETHANE SEALANT
DOOR PANEL JOINT SEALANT	- CRL SILICONE OR VULKEN POLYURETHANE SEALANT

MANUFACTURER:

SOUTHEASTERN

Manufacturers of Impact Resistant Sliding Glass Doors

1505 COMMERCE LANE, P.O. BOX 794
JUPITER, FLORIDA 33458
PHONE: (561) 746-5493
FAX: (561) 575-1826

PRODUCT:

ATLAS PLUS

SERIES 5000 ALUMINUM SLIDING GLASS DOOR SMALL MISSILE IMPACT

Engineering:

EngCo Inc.

CA 8116
5595 Orange Dr. 201
Davie, Fl. 33314
Tel.: (954) 585-0304
Fax: (954) 585-0305
ENGCO@AOL.COM

PEDRO M. DE FIGUEIREDO
LICENSE No. 52609
MAY 03 2012
STATE OF FLORIDA
PROFESSIONAL ENGINEER

Pedro M. De Figueiredo
P.E. No. 52609

MIAMI-DADE BCCO:

PRODUCT REVISED
as complying with the Florida Building Code
Acceptance No. 12-0223.04
Expiration Date JUNE 26, 2013
By
Miami-Dade Product Control

Date: 01/28/12
Scale: NA
Design by: PPMF

Drawing Number
12-015

SHEET
13 of 13