MIAMI-DADE COUNTY
DEPARTMENT OF PERMITTING, ENVIRONMENT, AND REGULATORY AFFAIRS (PERA)
BOARD AND CODE ADMINISTRATION DIVISION

NOTICE OF ACCEPTANCE (NOA)

MIAMI-DADE COUNTY
PRODUCT CONTROL SECTION
11805 SW 26 Street, Room 208
Miami, Florida 33175-2474
T (786) 315-2590 F (786) 315-2599
www.miamidade.gov/pera/

Security Impact Windows, LLC
975 S. Congress Ave. # 102
Delray Beach, Florida 33445

SCOPE:
This NOA is being issued under the applicable rules and regulations governing the use of construction materials. The documentation submitted has been reviewed and accepted by Miami-Dade County PERA -Product Control Section to be used in Miami Dade County and other areas where allowed by the Authority Having Jurisdiction (AHJ).

This NOA shall not be valid after the expiration date stated below. The Miami-Dade County Product Control Section (In Miami Dade County) and/or the AHJ (in areas other than Miami Dade County) reserve the right to have this product or material tested for quality assurance purposes. If this product or material fails to perform in the accepted manner, the manufacturer will incur the expense of such testing and the AHJ may immediately revoke, modify, or suspend the use of such product or material within their jurisdiction. PERA reserves the right to revoke this acceptance, if it is determined by Miami-Dade County Product Control Section that this product or material fails to meet the requirements of the applicable building code.
This product is approved as described herein, and has been designed to comply with the Florida Building Code, including the High Velocity Hurricane Zone.

DESCRIPTION: Series "500 " Aluminum Outswing Doors w/wo Sidelite or Transom

APPROVAL DOCUMENT: Drawing No. **W08-23 Rev E**, titled "Series 500 Alum Outswing Entrance Door ", sheets 1, 2, 3, 4, 4.1 through 12 of 12, dated 03-06-08 and last revised on Jun 07, 2012, prepared by Al-Farooq Corporation, signed and sealed by Javad Ahmad, P. E., bearing the Miami-Dade County Product Control Revision stamp with the Notice of Acceptance number and expiration date by the Miami-Dade County Product Control Section.

MISSILE IMPACT RATING: Large and Small Missile Impact

Limitations:
1. See DP tables for X or XX in sheet **2**, O/X or O/XX in sheet **3** & door w/sidelites (Narrow/Wide stiles) in sheet **4**.
2. Max **door** leaf width mulled with sidelites in sheet **4**, shall not exceed = 36-91/6".
3. Glass lites wider than 36" shall have two setting blocks per FBC requirements.

LABELING: Each unit shall bear a permanent label with the manufacturer's name or logo, city, state and series and following statement: "Miami-Dade County Product Control Approved", noted herein.

RENEWAL of this NOA shall be considered after a renewal application has been filed and there has been no change in the applicable building code negatively affecting the performance of this product.

TERMINATION of this NOA will occur after the expiration date or if there has been a revision or change in the materials, use, and/or manufacture of the product or process. Misuse of this NOA as an endorsement of any product, for sales, advertising or any other purposes shall automatically terminate this NOA. Failure to comply with any section of this NOA shall be cause for termination and removal of NOA.

ADVERTISEMENT: The NOA number preceded by the words Miami-Dade County, Florida, and followed by the expiration date may be displayed in advertising literature. If any portion of the NOA is displayed, then it shall be done in its entirety.

INSPECTION: A copy of this entire NOA shall be provided to the user by the manufacturer or its distributors and shall be available for inspection at the job site at the request of the Building Official.
This NOA **revises NOA # 09-0115.06** and consists of this page 1 and evidence pages E-1, as well as approval document mentioned above.
The submitted documentation was reviewed by **Ishaq I. Chanda, P.E.**

NOA No 12-0223.05
Expiration Date: May 22, 2013
Approval Date: June 14, 2012

MIAMI-DADE COUNTY APPROVED
6/7/12

NOTICE OF ACCEPTANCE: EVIDENCE SUBMITTED

A. DRAWINGS

1. Manufacturer's die drawings and sections (transferred from file # **09-0115.06**)
2. Drawing No. **W08-23 Rev E**, titled "Series 500 Alum Outswing Entrance Door ", sheets 1, 2, 3, 4, 4.1 through 12 of 12, dated 03-06-08 and last revised on Jun 07, 2012, prepared by Al-Farooq Corporation, signed and sealed by Javad Ahmad, P.E.

B. TESTS (transferred from file # 09-0115.06)

1. Test reports on: 1) Air Infiltration Test, per FBC, TAS 202-94
   2) Uniform Static Air Pressure Test, Loading per FBC TAS 202-94
   3) Water Resistance Test, per FBC, TAS 202-94
   4) Large Missile Impact Test per FBC, TAS 201-94
   5) Cyclic Wind Pressure Loading per FBC, TAS 203-94
   6) Forced Entry Test, per FBC 2411 3.2.1, TAS 202-94

   Along with installation diagram of aluminum Inswing / Outswing doors w/wo sidelite and transom, prepared by Hurricane Engineering and Testing, Test Report No. HETI 07-4339, HETI 07-4371, HETI 07-4371, HETI 07-4372, HETI 07-4373and HETI 07-4374 dated 01/03/08, HETI-08-2184A & B dated 10/01/08, HETI 09-2572A, HETI 09-2573 dated June 30, 2009, all signed and sealed by Candido Font, P.E.

C. CALCULATIONS

1. Anchor verification calculations complying with FBC2010, prepared by Al Farooq Corporation, dated JAN 30, 2012 and last revised on May 08, 2012, signed and sealed by Javad Ahmad, P.E.
2. Glazing complies w/ ASTME-1300-02 & -04

D. QUALITY ASSURANCE

1. Miami Dade Department of Permitting, Environment, and Regulatory Affairs (PERA).

E. MATERIAL CERTIFICATIONS

1. Notice of Acceptance No. **11-0624.02** issued to E.I. DuPont DeNemours & Co., Inc. for their "**DuPont Sentry Glass ® interlayer**", expiring on 01/14/17.
2. Notice of Acceptance No. **11-0325.05** issued to Solutia, for "Saflex clear & color interlayer", expiring on 05/21/2016.

F. STATEMENTS

1. Statement letter of conformance to FBC 2010 and letter of no financial interest, prepared by Al Farooq Corporation, dated 01/17/12, signed and sealed by Javad Ahmad, P.E.
2. Statement letter of conformance to FBC 2007 and letter of no financial interest, prepared by Al Farooq Corporation, dated 09/03/09 signed & sealed by Arshad Viqar, P.E.
3. Lab compliance as part of the above referenced test report.
4. Addendum letter ref HETI-07-4374 dated May 06, 2008, issued by HETI, signed and sealed by Candido Font, P.E.

G. OTHER

1. This NOA **revises** NOA # **09-0115.06**, expiring on May 22, 2013.
2. Test proposal dated 05/01/08 approved by BCCO.
3. Test proposal #07-3758 dated Dec 05, 2007 approved by BCCO.

Ishaq I. Chanda

Ishaq I. Chanda, P.E.
Product Control Examiner
NOA No. 12-0223.05
Expiration Date: May 22, 2013
Approval Date: June 14, 2012

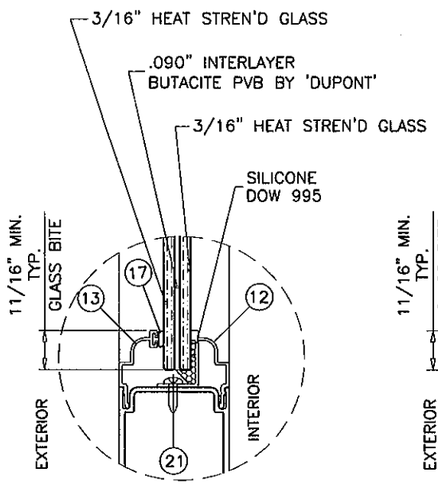

GLASS TYPE 'A'
7/16" OVERALL LAM. GLASS

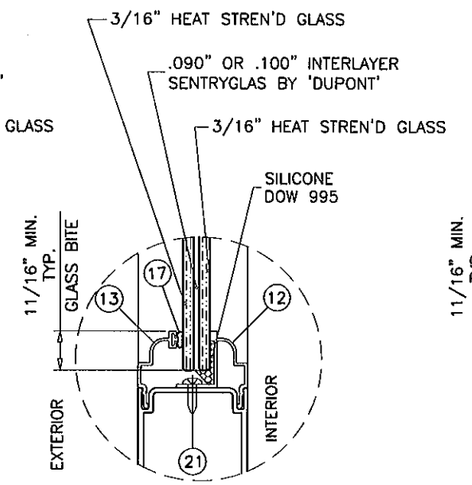

GLASS TYPE 'B'
7/16" OVERALL LAM. GLASS

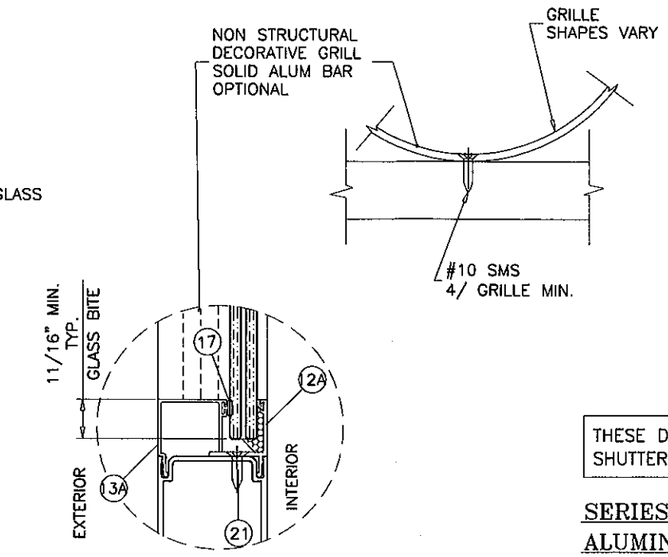

ALTERNATE GLAZING DETAIL
GLASS TYPES 'A' & 'B'

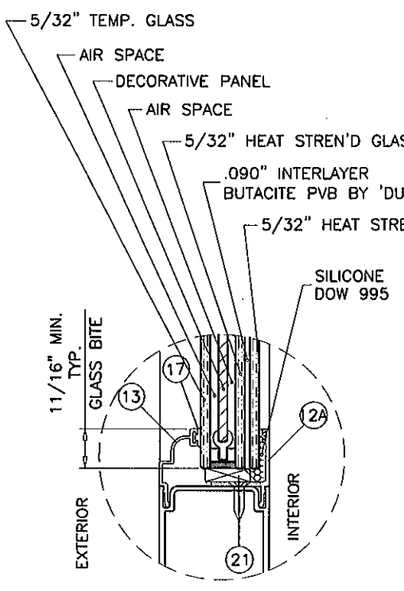

GLASS TYPE 'C'
1" OVERALL LAM. INSUL. GLASS

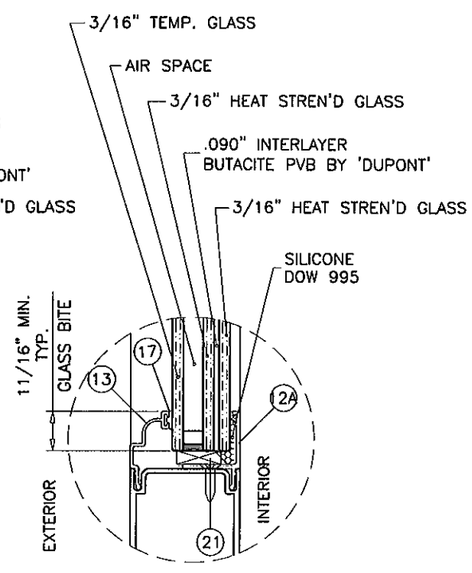

GLASS TYPE 'D'
1" OVERALL LAM. INSUL. GLASS

GLAZING OPTIONS

THESE DOORS ARE RATED FOR LARGE & SMALL MISSILE IMPACT.
SHUTTERS ARE NOT REQUIRED.

SERIES 500
ALUMINUM OUTSWING ENTRANCE DOOR

SINGLE (X) AND DOUBLE (XX) LEAF DOORS W/O TRANSOM SEE SHEET 2.
SINGLE (O/X) AND DOUBLE (O/XX) LEAF DOORS WITH TRANSOMS SEE SHEET 3.
SINGLE AND DOUBLE LEAF DOORS WITH SIDELITES SEE SHEET 4.
LOWER VALUES FROM SIDELITE CAPACITY CHART OR DOOR CAPACITY WILL APPLY TO ENTIRE SYSTEM.

DOORS WITH STD. SILL APPROVED FOR INSTALLATIONS WHERE WATER INFILTRATION RESISTANCE IS REQUIRED.
DOORS WITH ADA THRESHOLD NOT APPROVED FOR INSTALLATIONS WHERE WATER INFILTRATION RESISTANCE IS REQUIRED.

THIS PRODUCT HAS BEEN DESIGNED AND TESTED TO COMPLY WITH THE REQUIREMENTS OF THE FLORIDA BUILDING CODE INCLUDING HIGH VELOCITY HURRICANE ZONE (HVHZ).

1BY OR 2BY WOOD BUCKS BY OTHERS, MUST BE ANCHORED PROPERLY TO TRANSFER LOADS TO THE STRUCTURE.

ANCHORS SHALL BE AS LISTED, SPACED AS SHOWN ON DETAILS, ANCHORS EMBEDMENT TO BASE MATERIAL SHALL BE BEYOND WALL DRESSING OR STUCCO.

ANCHORING OR LOADING CONDITIONS NOT SHOWN IN THESE DETAILS ARE NOT PART OF THIS APPROVAL.

A LOAD DURATION INCREASE IS USED IN DESIGN OF ANCHORS INTO WOOD ONLY.

MATERIALS INCLUDING BUT NOT LIMITED TO STEEL/METAL SCREWS, THAT COME INTO CONTACT WITH OTHER DISSIMILAR MATERIALS SHALL MEET THE REQUIREMENTS OF THE FLORIDA BLDG. CODE SECTION 2003.8.4.

Engr: JAVAD AHMAD
CIVIL
FLA. PE # 70592
C.A.N. 3538

JUN 07 2012

PRODUCT REVIEWED
Complying with the Florida Building Code
Application No. 12-0223.05
Expiration Date May 22, 2013
Vikas J. Chande
Product Control Division

AL-FAROOQ CORPORATION
ENGINEERS & PRODUCT DEVELOPMENT
1235 S.W. 87 AVE
MIAMI, FLORIDA 33174
TEL. (305) 264-8100 FAX. (305) 262-6978

COMP-ANL\W08-23SIW

SERIES 500 ALUM OUTSWING ENTRANCE DOOR (L.M.I.)

SIW IMPACT WINDOWS, LLC.
975 S. CONGRESS AVE. #102
DELRAY BEACH, FL. 33445
TEL. (561) 274-9262 FAX. (561) 274-9392

revisions:

no	date	by	description
A	05.07.08		REV. PER BCCO COMMENTS
B	10.26.08		GENERAL REV.
C	10.07.09		GENERAL REV.
D	11.25.09		REV. PER BCCO COMMENTS
E	01.23.12		UPDATED TO 2010 FBC

date: 03-06-08
scale: 1/2"=1'-0"
dr. by: HAMID
chk. by:

drawing no.
W08-23

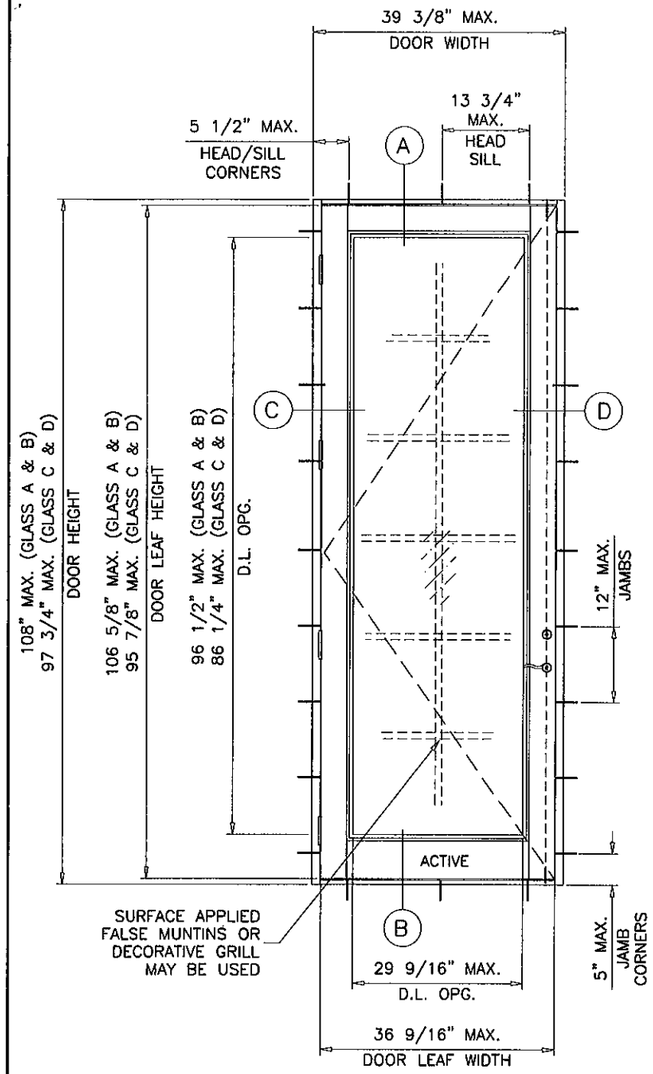

(X)

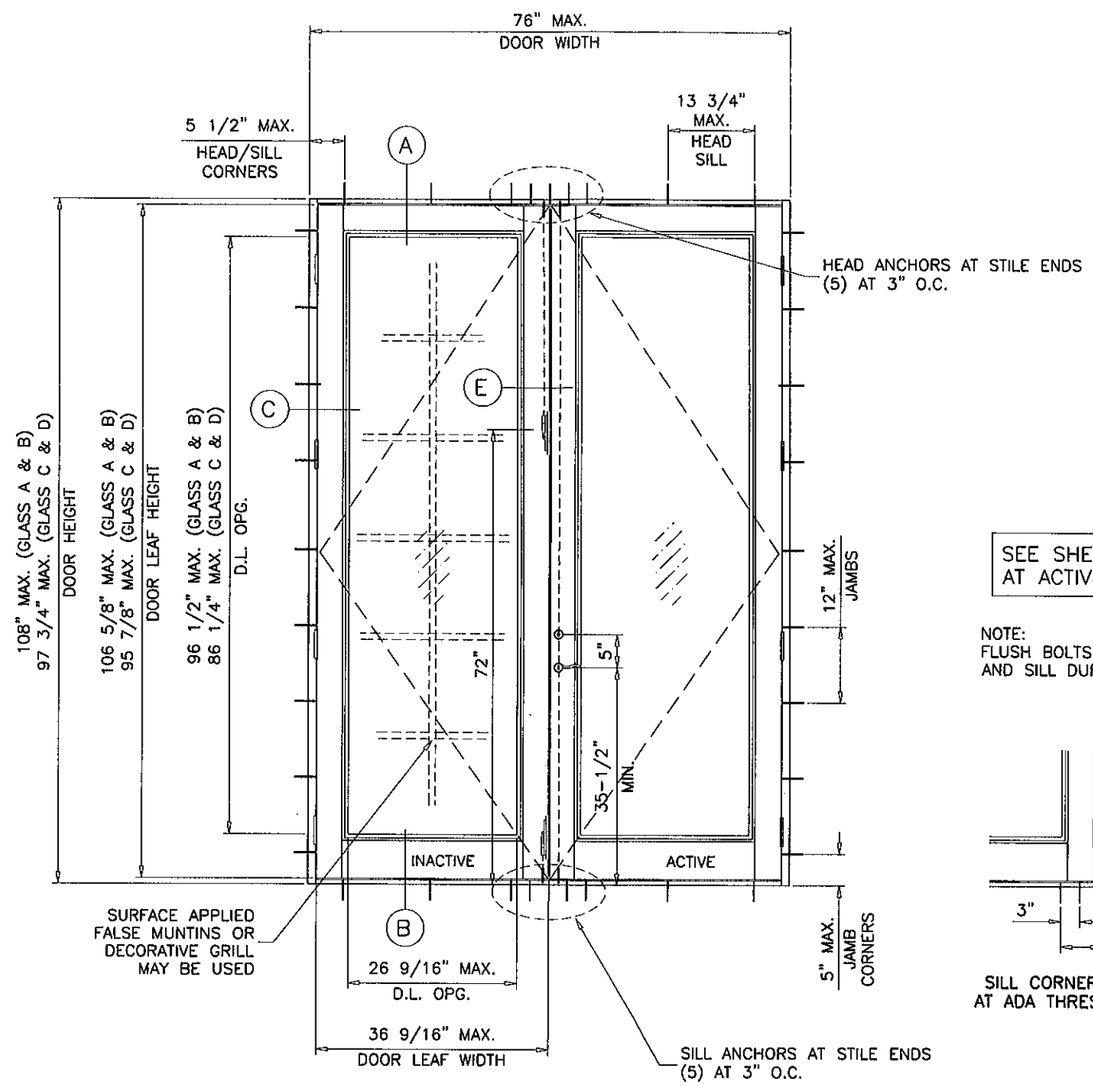

(XX)

SEE SHEET 11 FOR LOCKING OPTIONS AT ACTIVE & INACTIVE LEAFS.

NOTE:
FLUSH BOLTS AND LOCKS MUST BE ENGAGED TO HEAD AND SILL DURING PERIODS OF HURRICANE WARNING.

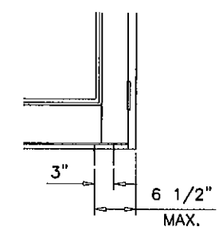

SILL CORNER ANCHORS AT ADA THRESHOLD ONLY

PRODUCT REVISED
in complying with the Florida Building Code
Application No 12-0223.05
Expiration Date 5/22/13
Product Control

DOORS LOAD CAPACITY – PSF SINGLE DOORS WITHOUT TRANSOM (X)							
DOOR DIMS.		GLASS TYPE 'A'		GLASS TYPE 'B'		GLASS TYPES 'C' & 'D'	
DOOR WIDTH	DOOR HEIGHT	EXT.(+)	INT.(–)	EXT.(+)	INT.(–)	EXT.(+)	INT.(–)
39-3/8"	97-3/4"	70.0	70.0	80.0	80.0	60.0	60.0
39-3/8"	108"	70.0	70.0	80.0	80.0	–	–

DOORS LOAD CAPACITY – PSF DOUBLE DOORS WITHOUT TRANSOM (XX)							
DOOR DIMS.		GLASS TYPE 'A'		GLASS TYPE 'B'		GLASS TYPES 'C' & 'D'	
DOOR WIDTH	DOOR HEIGHT	EXT.(+)	INT.(–)	EXT.(+)	INT.(–)	EXT.(+)	INT.(–)
76"	97-3/4"	70.0	70.0	80.0	80.0	60.0	60.0
76"	108"	70.0	70.0	80.0	80.0	–	–

LEAF HEIGHT = DOOR HEIGHT – 1.375"
LEAF WIDTH = DOOR WIDTH – 2.812"
D.L.O. HEIGHT (DOOR) = LEAF HEIGHT – 12" (4" TOP RAIL, 6" BOT. RAIL)
D.L.O. WIDTH (DOOR) = LEAF WIDTH – 7"

NOTE:
GLASS CAPACITIES ON THIS SHEET ARE BASED ON ASTM E1300-04 (3 SEC. GUSTS) AND FLORIDA BUILDING COMMISSION DECLARATORY STATEMENT DCA05-DEC-219

Engr: JAVAD AHMAD
CIVIL
FLA. PE # 70592
C.A.N. 3538

JUN 07 2012

AL-FAROOQ CORPORATION
ENGINEERS & PRODUCT DEVELOPMENT
1235 S.W. 87 AVE
MIAMI, FLORIDA 33174
TEL. (305) 264-8100 FAX. (305) 262-6978
COMP-ANL\W08-23SIW

SERIES 500 ALUM OUTSWING ENTRANCE DOOR (L.M.I.)

SIW IMPACT WINDOWS, LLC.
975 S. CONGRESS AVE. #102
DELRAY BEACH, FL. 33445
TEL. (561) 274-9392 FAX. (561) 274-9262

revisions:

no	date	by	description
A	05.07.08		REV. PER BCCO COMMENTS
B	10.26.08		GENERAL REV.
C	10.07.09		GENERAL REV.
D	11.25.09		REV. PER BCCO COMMENTS
E	01.23.12		NO CHANGE THIS SHEET

date: 03-06-08
scale: 1/2"=1'-0"
dr. by: HAMID
chk. by:

drawing no.
W08-23

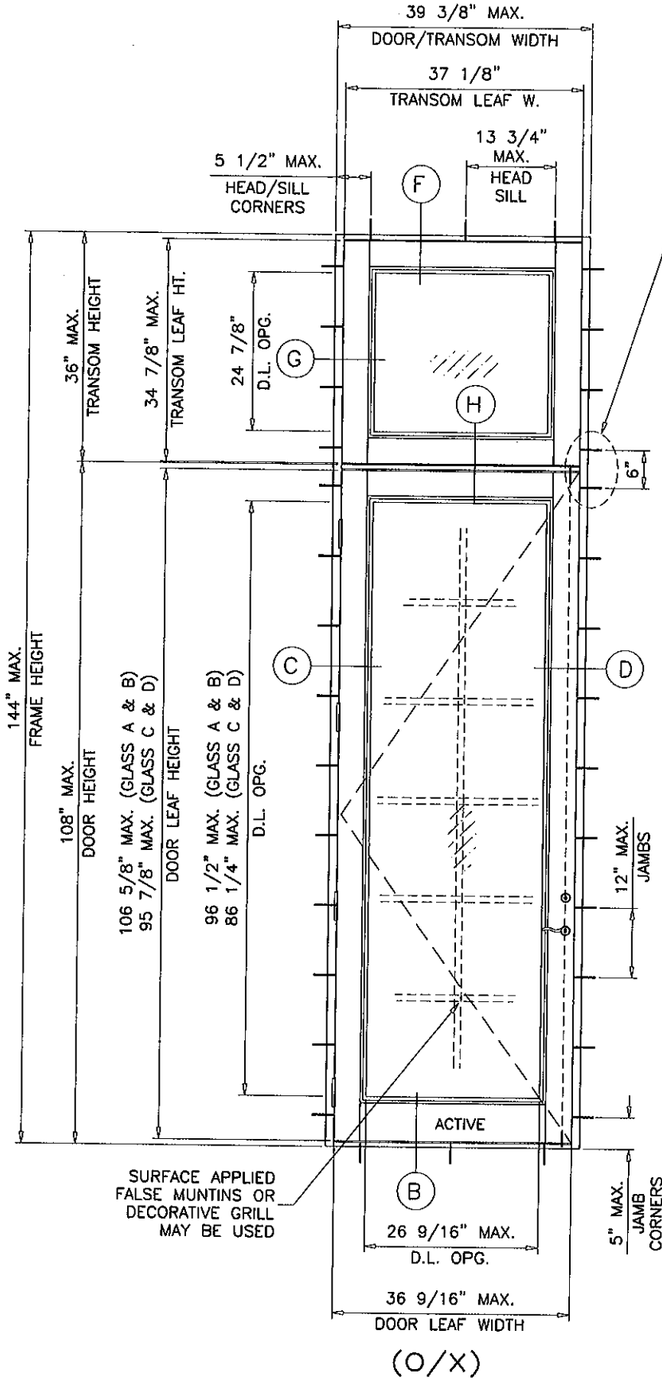

(O/X)

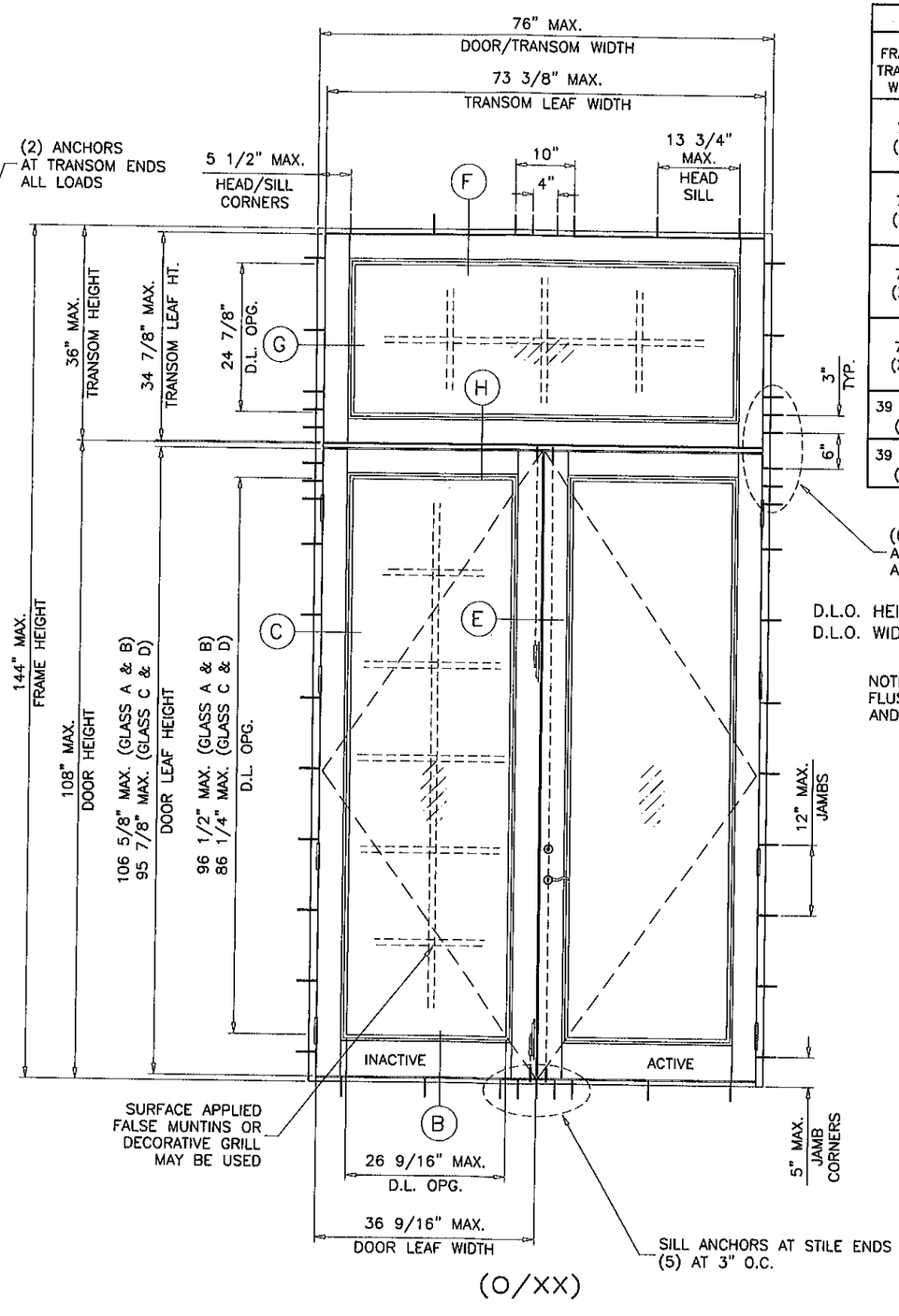

(O/XX)

SINGLE OR DOUBLE DOORS WITH TRANSOM CAPACITY – PSF								
FRAME/ TRANSOM WIDTH	DOOR HEIGHT	TRANSOM HEIGHT	GLASS TYPE 'A'		GLASS TYPE 'B'		GLASS TYPE 'C' & 'D'	
			EXT.(+)	INT.(–)	EXT.(+)	INT.(–)	EXT.(+)	INT.(–)
72" (XX)	96"	24"	70.0	70.0	80.0	80.0	60.0	60.0
		30"	70.0	70.0	79.4	79.4	60.0	60.0
		36"	70.0	70.0	76.5	76.5	60.0	60.0
76" (XX)		24"	70.0	70.0	74.2	74.2	60.0	60.0
		30"	70.0	70.0	71.0	71.0	60.0	60.0
		36"	68.3	68.3	68.3	68.3	60.0	60.0
72" (XX)	108"	24"	70.0	70.0	75.3	75.3	–	–
		30"	70.0	70.0	72.4	72.4	–	–
		36"	70.0	70.0	70.0	70.0	–	–
76" (XX)		24"	67.4	67.4	67.4	67.4	–	–
		30"	64.8	64.8	64.8	64.8	–	–
		36"	62.5	62.5	62.5	62.5	–	–
39 3/8" (X)	96"	36"	70.0	70.0	80.0	80.0	60.0	60.0
39 3/8" (X)	108"	36"	70.0	70.0	80.0	80.0	–	–

D.L.O. HEIGHT (TRANSOM) = TRANSOM LEAF HEIGHT – 10"
D.L.O. WIDTH (TRANSOM) = TRANSOM LEAF WIDTH – 10"

NOTE:
FLUSH BOLTS AND LOCKS MUST BE ENGAGED TO HEAD AND SILL DURING PERIODS OF HURRICANE WARNING.

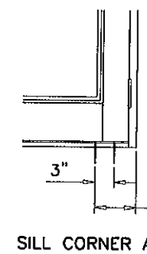

SILL CORNER ANCHORS AT ADA THRESHOLD ONLY

PRODUCT REVISED
as complying with the Florida Building Code
Acceptance No. 12-0223.05
Expiration Date 5/22/13
By Ishaq I. Khan
Miami-Dade Product Control

Engr: JAVAD AHMAD
CIVIL
FLA. PE # 70592
C.A.N. 3538

JUN 07 2012

AL-FAROOQ CORPORATION
ENGINEERS & PRODUCT DEVELOPMENT
1235 S.W. 87 AVE
MIAMI, FLORIDA 33174
TEL. (305) 264-8100 FAX. (305) 262-6978
COMP-ANL\W08-23SIW

SERIES 500 ALUM OUTSWING ENTRANCE DOOR (L.M.I.)

SIW IMPACT WINDOWS, LLC.
975 S. CONGRESS AVE. #102
DELRAY BEACH, FL. 33445
TEL. (561) 274-9262 FAX. (561) 274-9392

revisions:

no	date	by	description
A	05.07.08		REV. PER BCCO COMMENTS
B	10.26.08		GENERAL REV.
C	10.07.09		GENERAL REV.
D	11.25.09		REV. PER BCCO COMMENTS
E	01.23.12		UPDATED TO 2010 FBC

date: 03-06-08
scale: 1/2"=1'-0"
dr. by: HAMID
chk. by:

drawing no.
W08-23

DESIGN LOAD CAPACITY – PSF SIDELITES WITH SINGLE OR DOUBLE LEAF DOORS									
		GLASS TYPE 'A' (SEE NOTE BELOW) GLASS TYPE 'B'						GLASS TYPES 'C' & 'D'	
SIDELITE WIDTH INCHES	DOOR HEIGHT INCHES	NARROW STILE SIDELITE W/O REINF.		NARROW STILE SIDELITE WITH REINF.		WIDE STILE SIDELITE W/O REINF.		NARROW STILE WIDE STILE SIDELITE W/O REINF.	
		EXT.(+)	INT.(–)	EXT.(+)	INT.(–)	EXT.(+)	INT.(–)	EXT.(+)	INT.(–)
30	80	80.0	80.0	80.0	80.0	80.0	80.0	60.0	60.0
36		80.0	80.0	80.0	80.0	80.0	80.0	60.0	60.0
42		80.0	80.0	80.0	80.0	80.0	80.0	60.0	60.0
46–7/8		80.0	80.0	80.0	80.0	80.0	80.0	–	–
48		80.0	80.0	80.0	80.0	80.0	80.0	–	–
52		73.8	73.8	73.8	73.8	73.8	73.8	–	–
54		71.1	71.1	71.1	71.1	71.1	71.1	–	–
56		68.6	68.6	68.6	68.6	68.6	68.6	–	–
60		64.0	64.0	64.0	64.0	64.0	64.0	–	–
30	84	80.0	80.0	80.0	80.0	80.0	80.0	60.0	60.0
36		80.0	80.0	80.0	80.0	80.0	80.0	60.0	60.0
42		80.0	80.0	80.0	80.0	80.0	80.0	60.0	60.0
46–7/8		80.0	80.0	80.0	80.0	80.0	80.0	–	–
48		80.0	80.0	80.0	80.0	80.0	80.0	–	–
52		73.8	73.8	73.8	73.8	73.8	73.8	–	–
54		71.1	71.1	71.1	71.1	71.1	71.1	–	–
56		68.6	68.6	68.6	68.6	68.6	68.6	–	–
60		64.0	64.0	64.0	64.0	64.0	64.0	–	–
30	90	80.0	80.0	80.0	80.0	80.0	80.0	60.0	60.0
36		80.0	80.0	80.0	80.0	80.0	80.0	60.0	60.0
42		80.0	80.0	80.0	80.0	80.0	80.0	–	–
46–7/8		80.0	80.0	80.0	80.0	80.0	80.0	–	–
48		80.0	80.0	80.0	80.0	80.0	80.0	–	–
52		73.8	73.8	73.8	73.8	73.8	73.8	–	–
54		71.1	71.1	71.1	71.1	71.1	71.1	–	–
56		68.6	68.6	68.6	68.6	68.6	68.6	–	–
30	96	80.0	80.0	80.0	80.0	80.0	80.0	60.0	60.0
36		80.0	80.0	80.0	80.0	80.0	80.0	60.0	60.0
42		80.0	80.0	80.0	80.0	80.0	80.0	–	–
46–7/8		80.0	80.0	80.0	80.0	80.0	80.0	–	–
48		80.0	80.0	80.0	80.0	80.0	80.0	–	–
52		73.8	73.8	73.8	73.8	73.8	73.8	–	–
54		71.1	71.1	71.1	71.1	71.1	71.1	–	–
30	97–3/4	80.0	80.0	80.0	80.0	80.0	80.0	60.0	60.0
36		80.0	80.0	80.0	80.0	80.0	80.0	60.0	60.0
42		80.0	80.0	80.0	80.0	80.0	80.0	–	–
46–7/8		80.0	80.0	80.0	80.0	80.0	80.0	–	–
48		80.0	80.0	80.0	80.0	80.0	80.0	–	–
52		73.8	73.8	73.8	73.8	73.8	73.8	–	–
30	102"	80.0	80.0	80.0	80.0	80.0	80.0	–	–
36		80.0	80.0	80.0	80.0	80.0	80.0	–	–
42		80.0	80.0	80.0	80.0	80.0	80.0	–	–
46–7/8		75.7	75.7	80.0	80.0	80.0	80.0	–	–
48		74.7	74.7	80.0	80.0	80.0	80.0	–	–
30	108"	79.7	79.7	80.0	80.0	80.0	80.0	–	–
36		73.2	73.2	80.0	80.0	79.0	79.0	–	–
42		67.7	67.7	75.6	75.6	73.1	73.1	–	–
46–7/8		63.7	63.7	71.2	71.2	68.8	68.8	–	–
48		62.9	62.9	70.3	70.3	67.9	67.9	–	–

FOR GLASS TYPE 'A' LIMIT MAX. DESIGN LOADS TO ±70.0 PSF

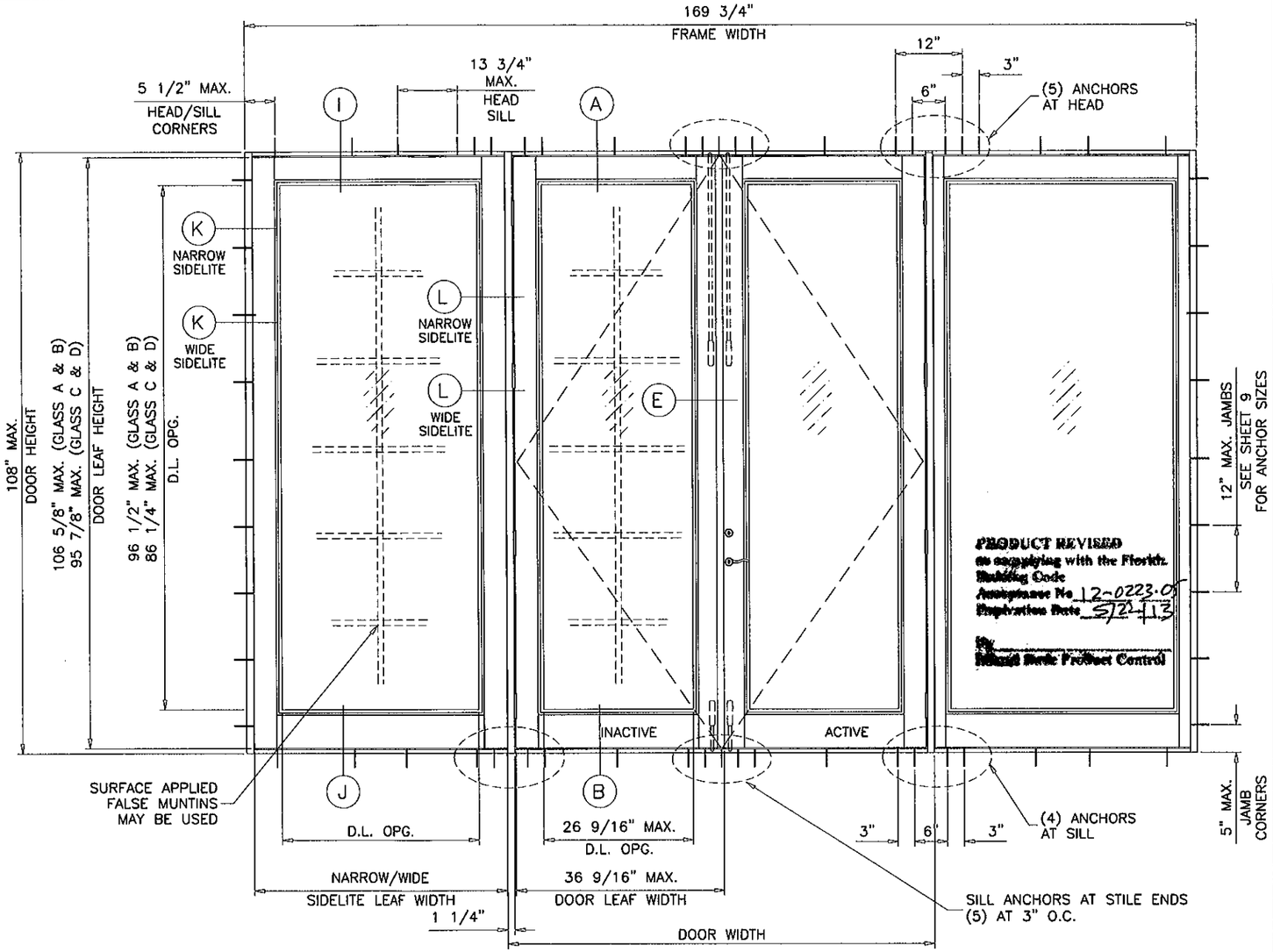

(OXXO)

NOTE:
FOR DOOR/GLASS CAPACITIES SEE SHEET 2.
FOR SIDELITE CAPACITIES SEE CHART AT LEFT.
LOWER VALUES FROM DOOR OR SIDELITE CHART
WILL APPLY TO ENTIRE SYSTEM.

NOTE:
FLUSH BOLTS AND LOCKS MUST BE ENGAGED TO HEAD
AND SILL DURING PERIODS OF HURRICANE WARNING.

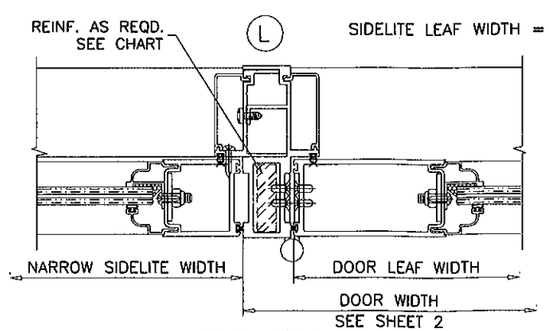

NARROW STILE
SIDELITE WITH DOOR

SIDELITE LEAF WIDTH = SIDELITE WIDTH – 1 3/8"

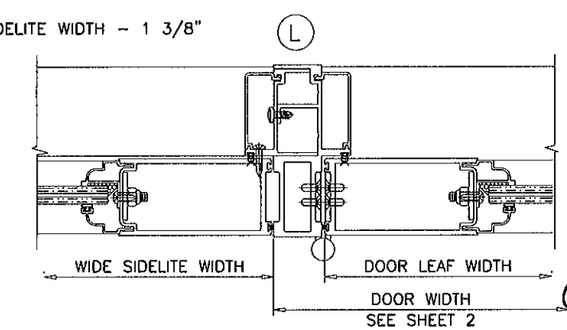

WIDE STILE
SIDELITE WITH DOOR

Engr: JAVAD AHMAD
CIVIL
FLA. PE # 70592
C.A.N. 3538

JUN 07 2012

AL-FAROOQ CORPORATION
ENGINEERS & PRODUCT DEVELOPMENT
1235 S.W. 87 AVE
MIAMI, FLORIDA 33174
TEL (305) 264-8100 FAX. (305) 262-6978

COMP–ANL\W08–23SIW

SERIES 500 ALUM OUTSWING ENTRANCE DOOR (L.M.I.)

SIW IMPACT WINDOWS, LLC.
975 S. CONGRESS AVE. #102
DELRAY BEACH, FL. 33445
TEL. (561) 274-9392 FAX. (561) 274-9262

revisions:

no	date	by	description
A	05.07.08		REV. PER BCCO COMMENTS
B	10.26.08		GENERAL REV.
C	10.07.09		GENERAL REV.
D	11.25.09		REV. PER BCCO COMMENTS
E	01.23.12		UPDATED TO 2010 FBC

date: 03–06–08
scale: 1/2"=1'–0"
dr. by: HAMID
chk. by:

drawing no.
W08–23

sheet 4 of 12

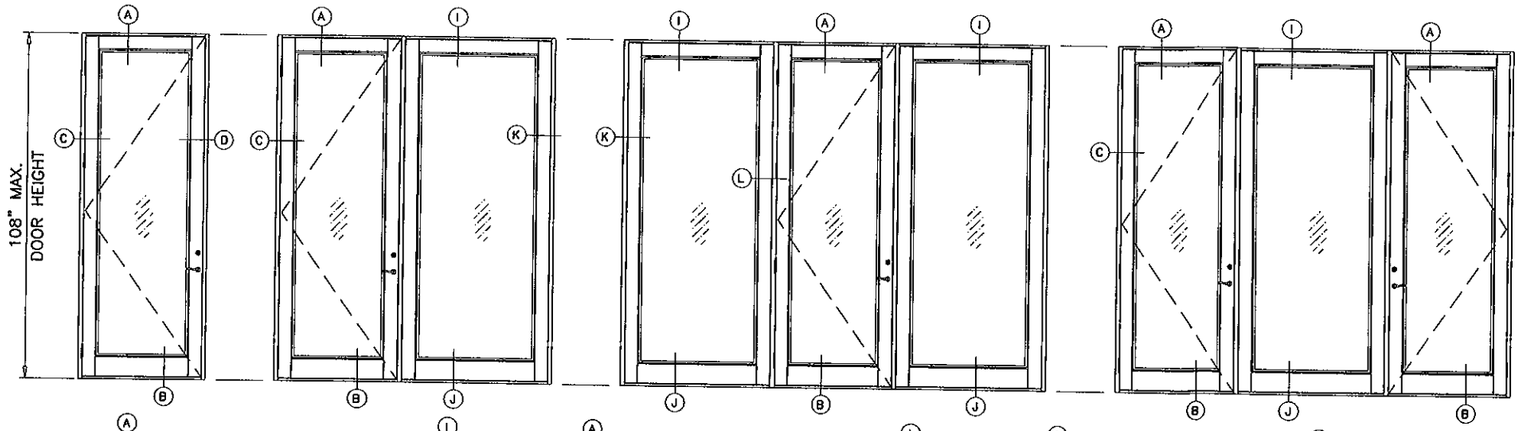

SINGLE LEAF DOORS WITHOUT SIDELITES.
SINGLE LEAF DOORS WITH SINGLE SIDELITE AT EITHER SIDE OF DOOR.

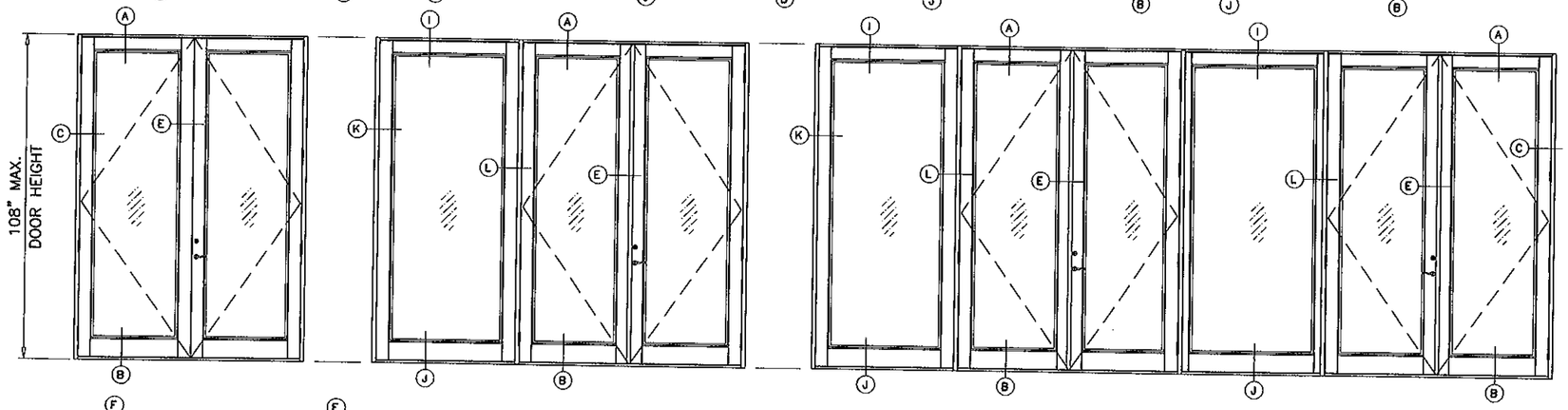

DOUBLE LEAF DOORS WITHOUT SIDELITES.
DOUBLE LEAF DOORS WITH SINGLE SIDELITE AT EITHER SIDE OF DOOR.

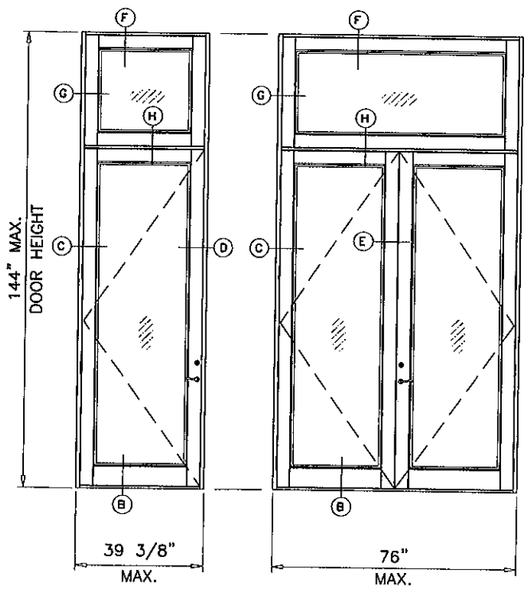

SINGLE AND DOUBLE LEAF DOORS WITH TRANSOMS AND WITHOUT SIDELITES

PRODUCT REVISED
as complying with the Florida Building Code
Acceptance No. 12-0223.05
Expiration Date 5/22/13
By Ishwy T. Chayde
Miami Dade Product Control

SEE SHEETS 2 AND 3 FOR MAXIMUM DOOR WIDTHS AND HEIGHTS
SEE SHEET 4 FOR SIDELITE WIDTHS

D.L.O. HEIGHT (SIDELITE) = LEAF HEIGHT – 12" (4" TOP RAIL, 6" BOT. RAIL)
D.L.O. WIDTH (SIDE LITE) = LEAF WIDTH – 10" (WIDE STILES)
D.L.O. WIDTH (SIDE LITE) = LEAF WIDTH – 6" (NARROW STILES)

APPROVED CONFIGURATIONS

DOORS, SIDELITES AND TRANSOM COMBINATIONS SHOWN ABOVE CAN BE USED AS INDIVIDUAL UNITS AS SHOWN OR IN COMBINATIONS WITH OTHER APPROVED PRODUCTS USING MIAMI-DADE COUNTY APPROVED MULLION IN BETWEEN.
LOWER VALUES FROM DOOR, SIDELITE, MULLIONS OR PRODUCTS USED WILL APPLY TO ENTIRE SYSTEM.

Engr: JAVAD AHMAD
CIVIL
FLA. PE # 70592
C.A.N. 3538

JUN 07 2012

AL-FAROOQ CORPORATION
ENGINEERS & PRODUCT DEVELOPMENT
1235 S.W. 87 AVE
MIAMI, FLORIDA 33174
TEL. (305) 264-8100 FAX. (305) 262-6978

COMP-ANL\W08-23SIW

SERIES 500 ALUM OUTSWING ENTRANCE DOOR (L.M.I.)

SIW IMPACT WINDOWS, LLC.
975 S. CONGRESS AVE. #102
DELRAY BEACH, FL. 33445
TEL. (561) 274-9392 FAX. (561) 274-9262

revisions:

no	date	by	description
C	10.07.09		GENERAL REV.
D	11.25.09		REV. PER BCCO COMMENTS
E	01.23.12		NO CHANGE THIS SHEET

date: 03-06-08
scale: –
dr. by: HAMID
chk. by:

drawing no.
W08-23

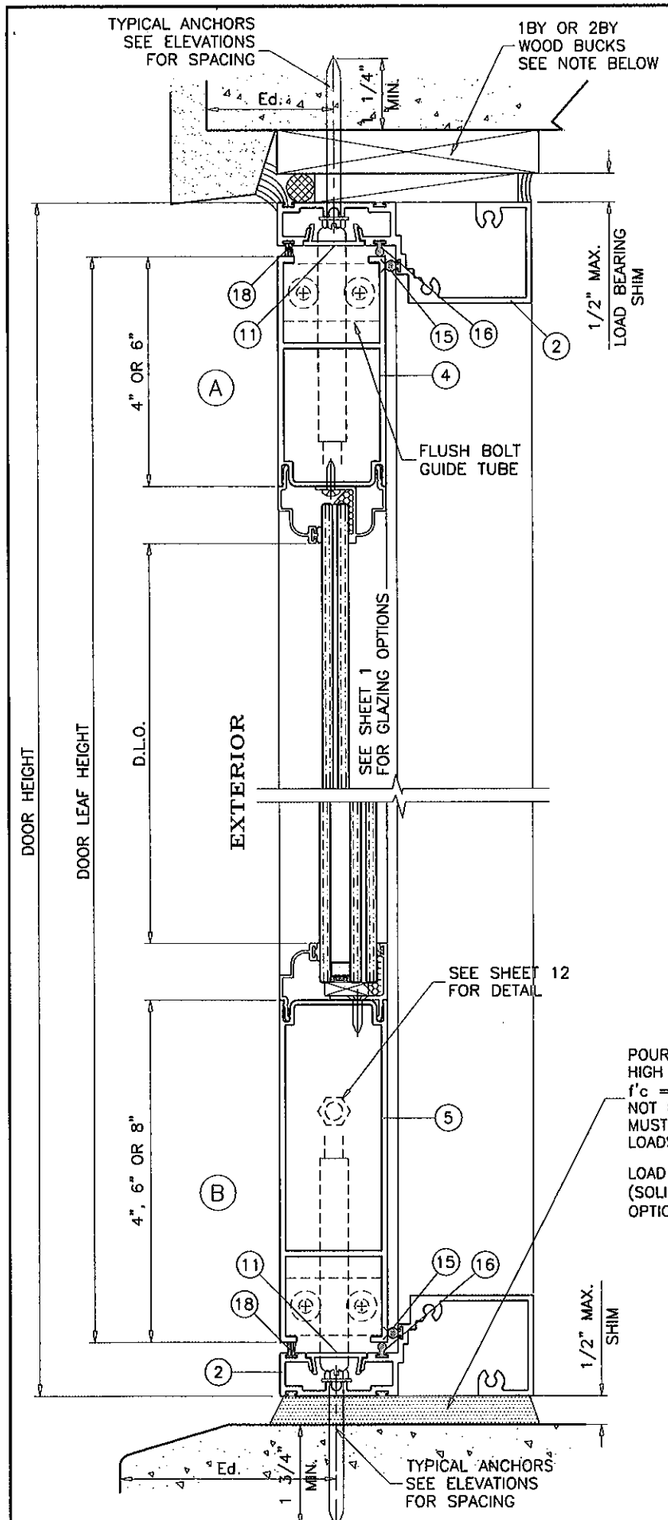

STD. SILL
OPERABLE UNITS
(APPROVED FOR WATER RESISTANCE)

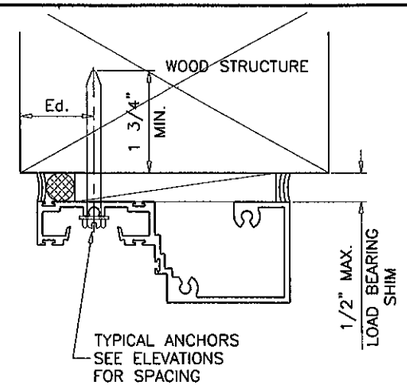

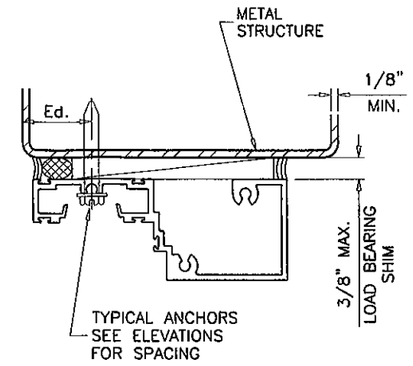

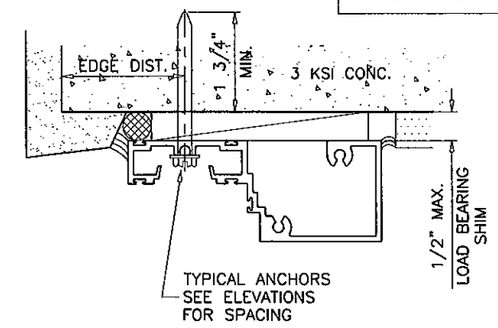

DOOR DETAILS

TYPICAL ANCHORS: SEE ELEV. FOR SPACING

ANCHORS TYPE	SUBSTRATE	AT HEAD		AT STD. SILL		AT ADA. SILL		AT JAMBS	
		MIN. EMBED.	MIN. EDGE DIST.	MIN. EMBED.	MIN. EDGE DIST.	MIN. EMBED.	MIN. EDGE DIST.	MIN. EMBED.	MIN. EDGE DIST.
1/4" DIA. ULTRACONS BY 'ELCO' (Fu=177 KSI, Fy=155 KSI)	WOOD	1-3/4"	1"	N.A.	N.A.	N.A.	N.A.	1-1/2"	1"
	MASONRY	N.A.	N.A.	N.A.	N.A.	N.A.	N.A.	1-1/4"	2-1/2"
	CONCRETE	1-1/4"	2-1/2"	1-3/4"	2-1/2"	N.A	N.A	1-1/4"	2-1/2"
5/16" DIA. ULTRACONS BY 'ELCO' (Fu=177 KSI, Fy=155 KSI)	WOOD	N.A.	N.A.	N.A.	N.A.	N.A.	N.A.	1-1/2"	1-1/4"
	MASONRY	N.A.	N.A.	N.A.	N.A.	N.A.	N.A.	1-1/4"	2-1/2"
	CONCRETE	N.A.	N.A.	N.A.	N.A.	1-1/4"	2-1/2"	1-1/4"	2-1/2"
1/4" DIA. SELF DRILLING SCREWS (GRADE 5 CRS)	METAL	1/8"	3/4"	N.A.	N.A.	N.A.	N.A.	1/8"	3/4"

WOOD = 2BY WOOD BUCKS OR WOOD STRUCTURE S.G. = 0.55 MIN.
MASONRY = C-90 HOLLOW/FILLED BLOCK f'm = 2000 PSI MIN.
CONCRETE = f'c = 3000 PSI MIN.
METAL = 1/8" MIN. THK. STEEL Fy = 36 KSI MIN.
MIAMI-DADE COUNTY APPROVED MULLION 1/8" MIN. THK.

1BY OR 2BY WOOD BUCKS AND METAL STRUCTURES NOT BY S.I.W. MUST SUSTAIN LOADS IMPOSED BY GLAZING SYSTEM AND TRANSFER THEM TO BUILDING STRUCTURE.

ANCHORS MAY BE HEX OR FLAT HEAD.

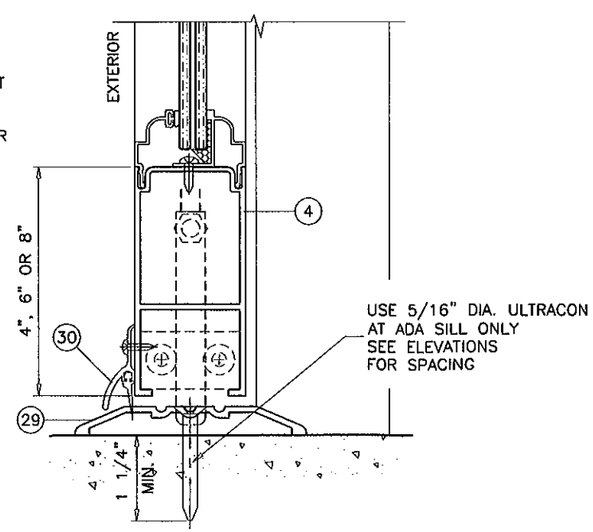

ADA THRESHOLD
OPERABLE UNITS
(NOT APPROVED FOR WATER RESISTANCE)

PRODUCT REVIEWED
Complying with the Florida Building Code
Application No. 12-0223.05
Expiration Date 9/22/13
By Doug L. Chanele
Miami Dade Product Control

Engr; JAVAD AHMAD
CIVIL
FLA. PE # 70592
C.A.N. 3538

JUN 07 2012

AL-FAROOQ CORPORATION
ENGINEERS & PRODUCT DEVELOPMENT
1235 S.W. 87 AVE
MIAMI, FLORIDA 33174
TEL. (305) 264-8100 FAX. (305) 262-6978
COMP-ANL\W08-23SIW

SERIES 500 ALUM OUTSWING ENTRANCE DOOR (L.M.I.)

SIW IMPACT WINDOWS, LLC.
975 S. CONGRESS AVE. #102
DELRAY BEACH, FL. 33445
TEL. (561) 274-9392 FAX. (561) 274-9262

revisions:

no	date	by	description
A	05.07.08		REV. PER BCCO COMMENTS
B	10.26.08		GENERAL REV.
C	10.07.09		GENERAL REV.
D	11.25.09		REV. PER BCCO COMMENTS
E	01.23.12		NO CHANGE THIS SHEET

date: 03-06-08
scale: 3/8" = 1"
dr. by: HAMID
chk. by:

drawing no.
W08-23

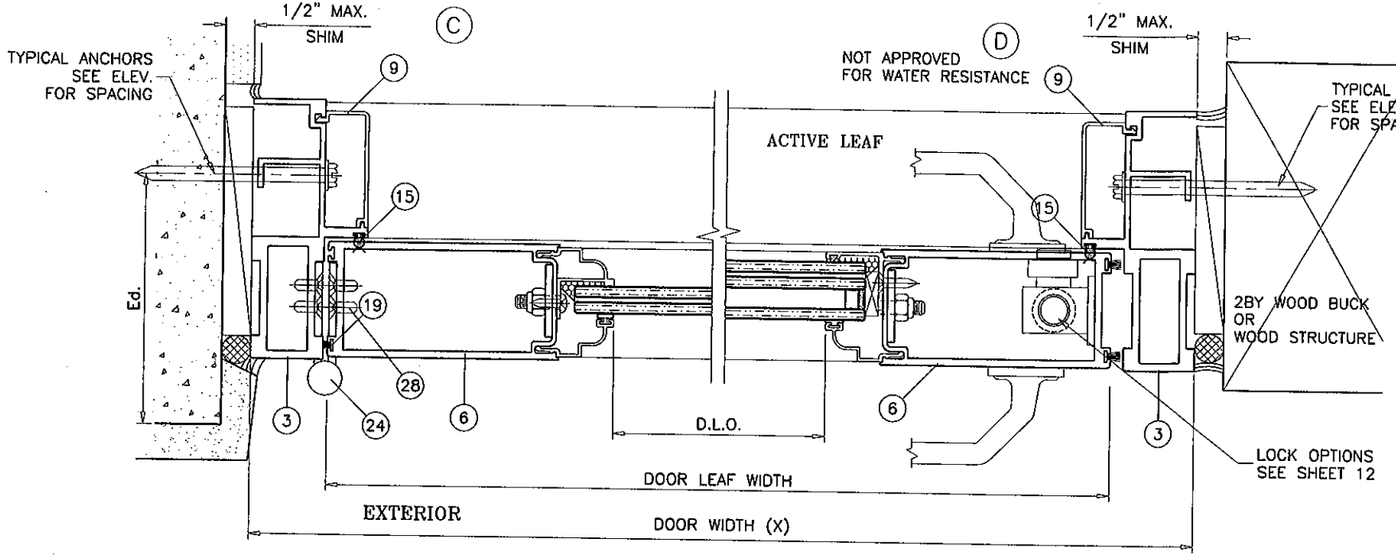

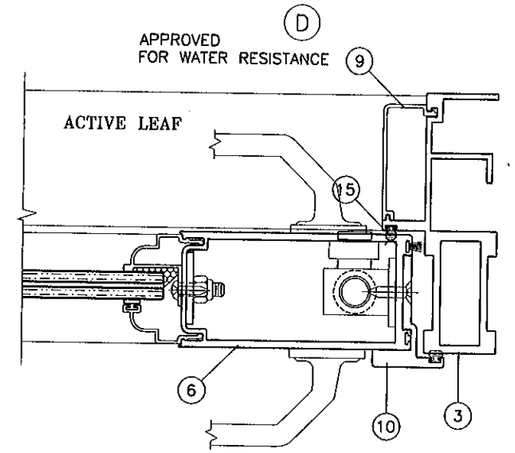

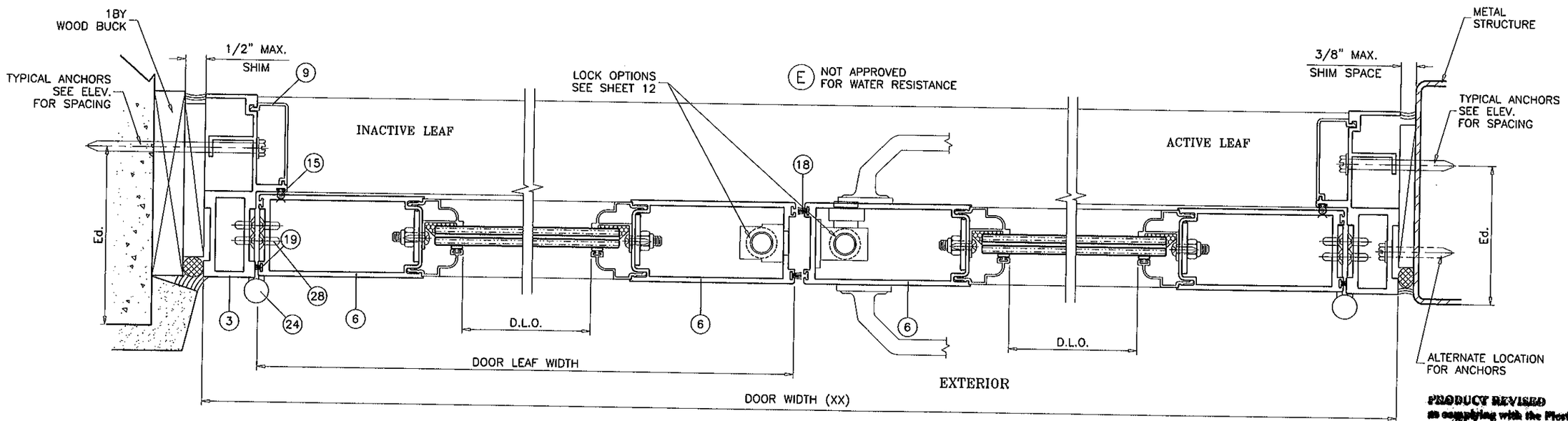

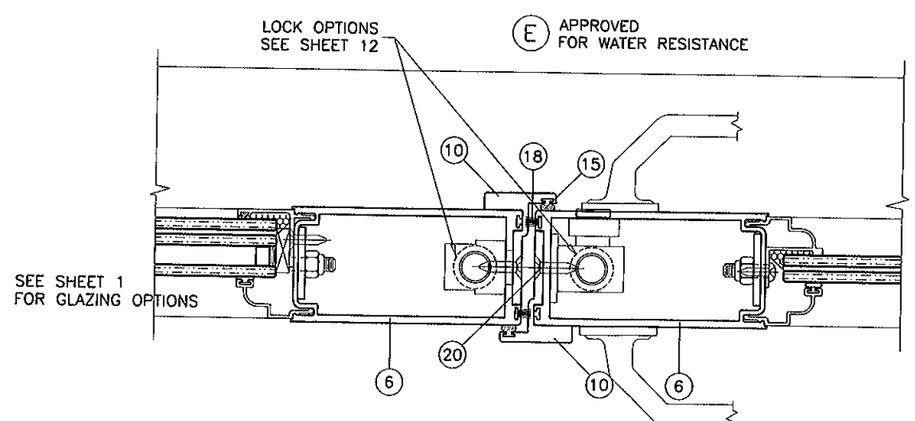

PRODUCT REVISED
in complying with the Florida Building Code
Acceptance No. 12-0223.05
Expiration Date 5/22/13
By Ishaq I. Chande
Miami Dade Product Control

DOOR DETAILS

Engr: JAVAD AHMAD
CIVIL
FLA. PE # 70592
C.A.N. 3538

JUN 07 2012

AL-FAROOQ CORPORATION
ENGINEERS & PRODUCT DEVELOPMENT
1235 S.W. 87 AVE
MIAMI, FLORIDA 33174
TEL. (305) 264-8100 FAX. (305) 262-6978
COMP-ANL\W08-23SIW

SERIES 500 ALUM OUTSWING ENTRANCE DOOR (L.M.I.)

SIW IMPACT WINDOWS, LLC.
975 S. CONGRESS AVE. #102
DELRAY BEACH, FL. 33445
TEL. (561) 274-9392 FAX. (561) 274-9262

revisions:

no	date	by	description
A	05.07.08		REV. PER BCCO COMMENTS
B	10.26.08		GENERAL REV.
C	10.07.09		GENERAL REV.
D	11.25.09		REV. PER BCCO COMMENTS
E	01.23.12		NO CHANGE THIS SHEET

date: 03-06-08
scale: 3/8" = 1"
dr. by: HAMID
chk. by:

drawing no.
W08-23

TRANSOM DETAILS

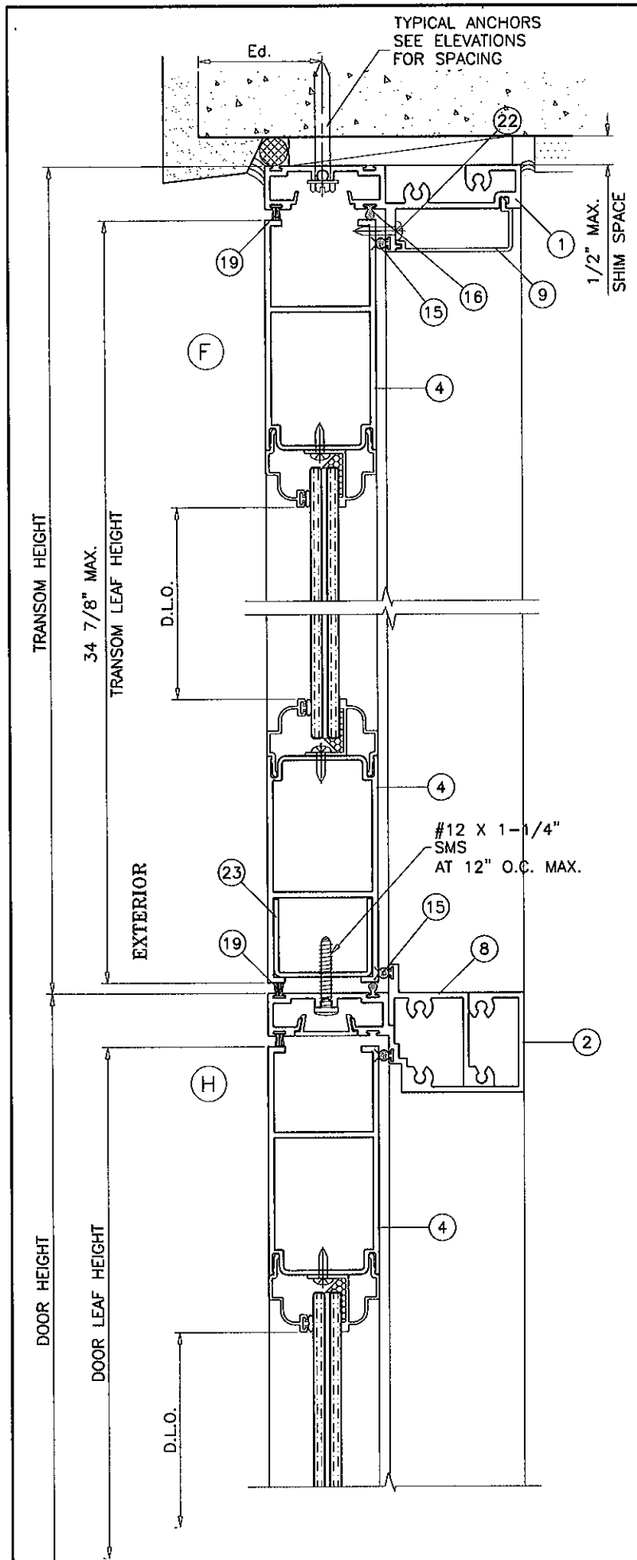

OPERABLE DOOR WITH TRANSOM

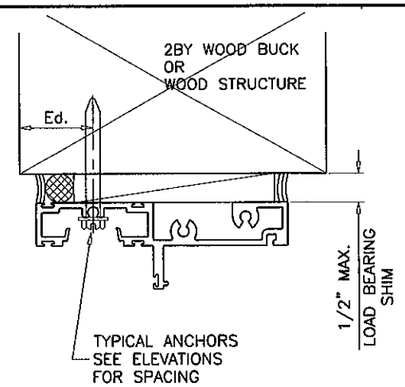

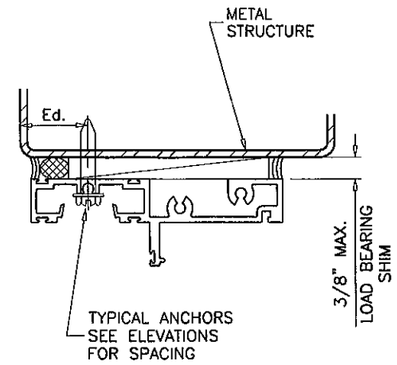

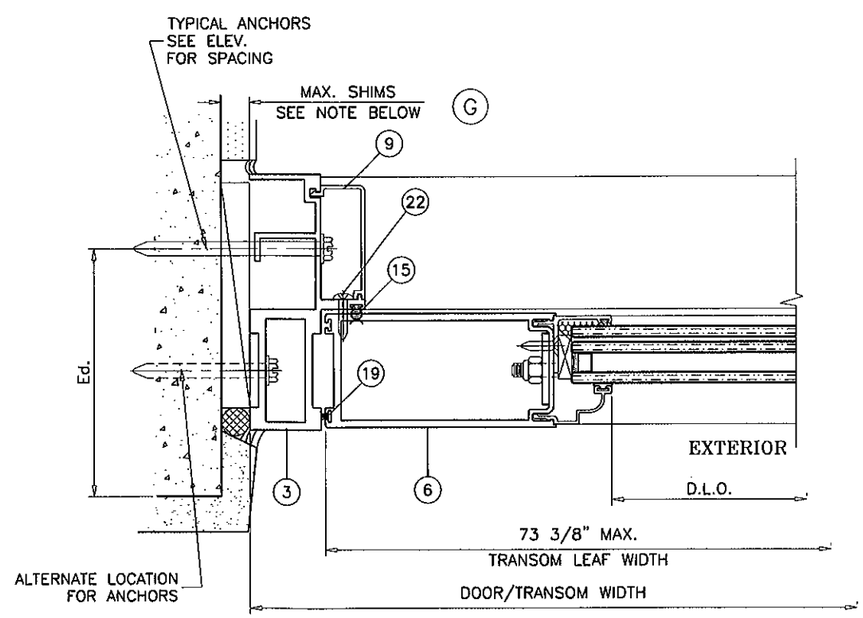

SHIM SPACE AT SIDELITES:

ANCHORS INTO WOOD, MASONRY OR CONC.
1/2" MAX. SHIMS FOR WIDTHS UP TO 46"
3/8" MAX. SHIMS FOR WIDTHS ABOVE 46"

ANCHORS INTO METAL STRUCTURES
3/8" MAX. SHIMS FOR ALL WIDTHS

PRODUCT REVISED
as complying with the Florida
Building Code
Acceptance No 12-0223.05
Expiration Date 5/22/13
By [signature]
Miami Dade Product Control

Engr: JAVAD AHMAD
CIVIL
FLA. PE # 70592
C.A.N. 3538

JUN 07 2012

AL-FAROOQ CORPORATION
ENGINEERS & PRODUCT DEVELOPMENT
1235 S.W. 87 AVE
MIAMI, FLORIDA 33174
TEL. (305) 264-8100 FAX. (305) 262-6978

COMP-ANL\W08-23SIW

SERIES 500 ALUM OUTSWING ENTRANCE DOOR (L.M.I.)

SIW IMPACT WINDOWS, LLC.
975 S. CONGRESS AVE. #102
DELRAY BEACH, FL. 33445
TEL. (561) 274-9392 FAX. (561) 274-9262

revisions:

no	date	by	description
A	05.07.08		REV. PER BCCO COMMENTS
B	10.26.08		GENERAL REV.
C	10.07.09		GENERAL REV.
D	11.25.09		REV. PER BCCO COMMENTS
E	01.23.12		UPDATED TO 2010 FBC

date: 03-06-08
scale: 3/8" = 1"
dr. by: HAMID
chk. by:

drawing no.
W08-23

SIDELITE DETAILS

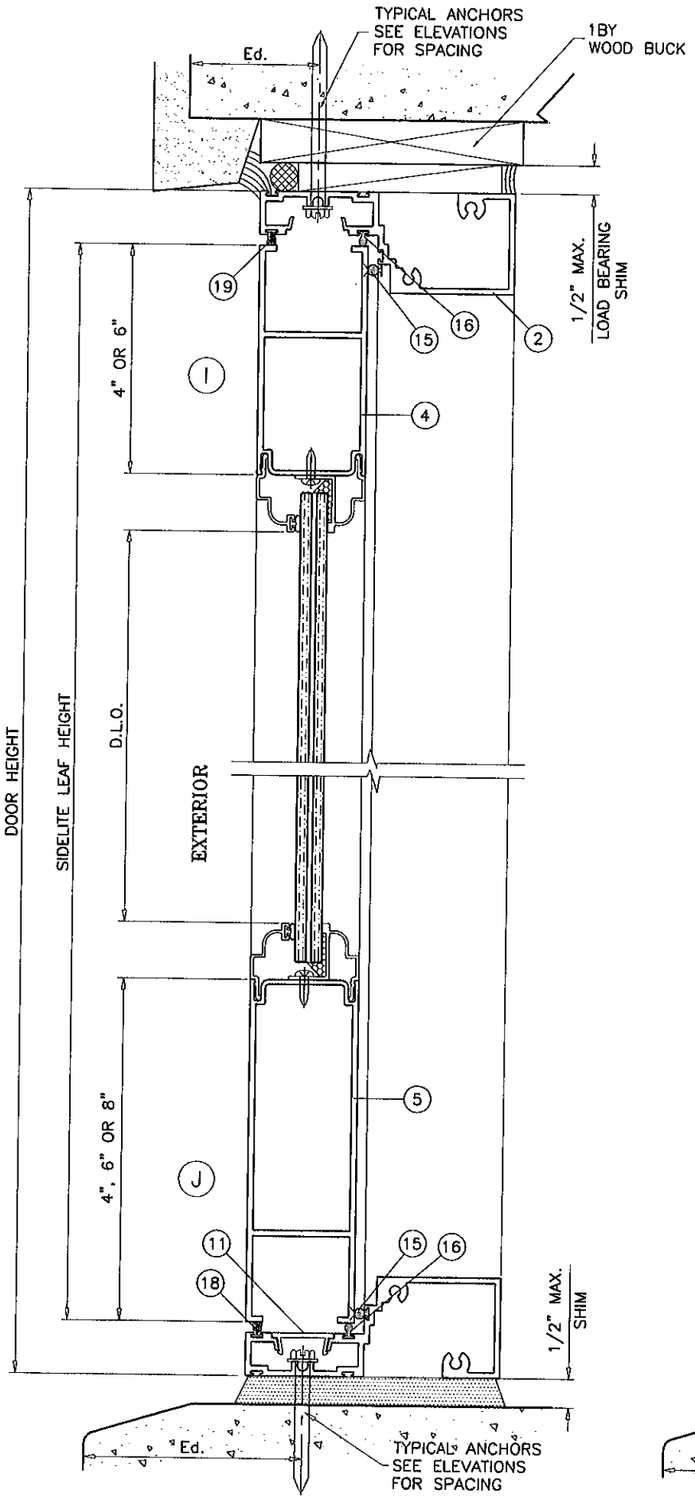

STATIONARY UNITS
(SINGLE SIDELITE)

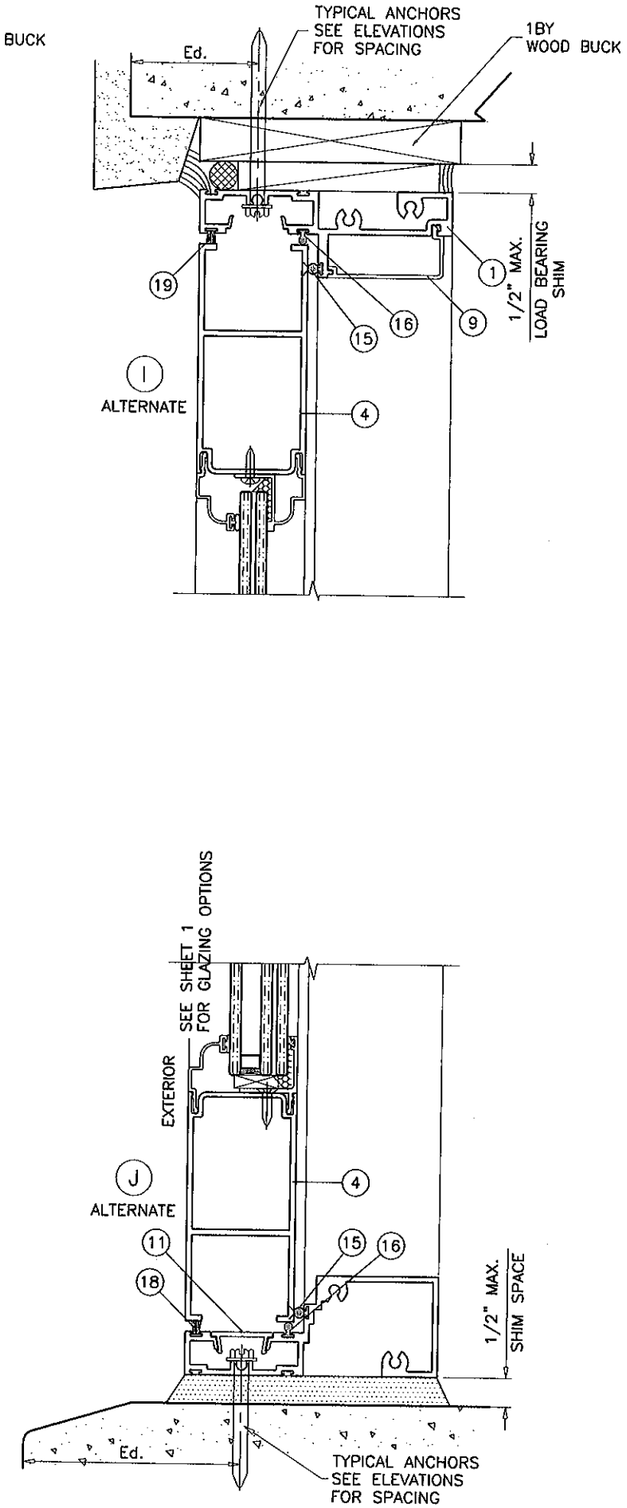

PRODUCT REVISED
in complying with the Florida Building Code
Acceptance No 12-0223.05
Expiration Date 5/22/13
By Ishwar L. Chandale
Miami Dade Product Control

Engr: JAVAD AHMAD
CIVIL
FLA. PE # 70592
C.A.N. 3538

JUN 07 2012

AL-FAROOQ CORPORATION
ENGINEERS & PRODUCT DEVELOPMENT
1235 S.W. 87 AVE
MIAMI, FLORIDA 33174
TEL. (305) 264-8100 FAX. (305) 262-6978

COMP-ANL\W08-23SIW

SERIES 500 ALUM OUTSWING ENTRANCE DOOR (L.M.I.)

SIW IMPACT WINDOWS, LLC.
975 S. CONGRESS AVE. #102
DELRAY BEACH, FL. 33445
TEL. (561) 274-9262 FAX. (561) 274-9392

revisions:

no	date	by	description
A	05.07.08		REV. PER BCCO COMMENTS
B	10.26.08		GENERAL REV.
C	10.07.09		GENERAL REV.
D	11.25.09		NO CHANGE THIS SHEET
E	01.23.12		NO CHANGE THIS SHEET

date: 03-06-08
scale: 3/8" = 1"
dr. by: HAMID
chk. by:

drawing no.
W08-23

sheet 8 of 12

SIDELITE DETAILS

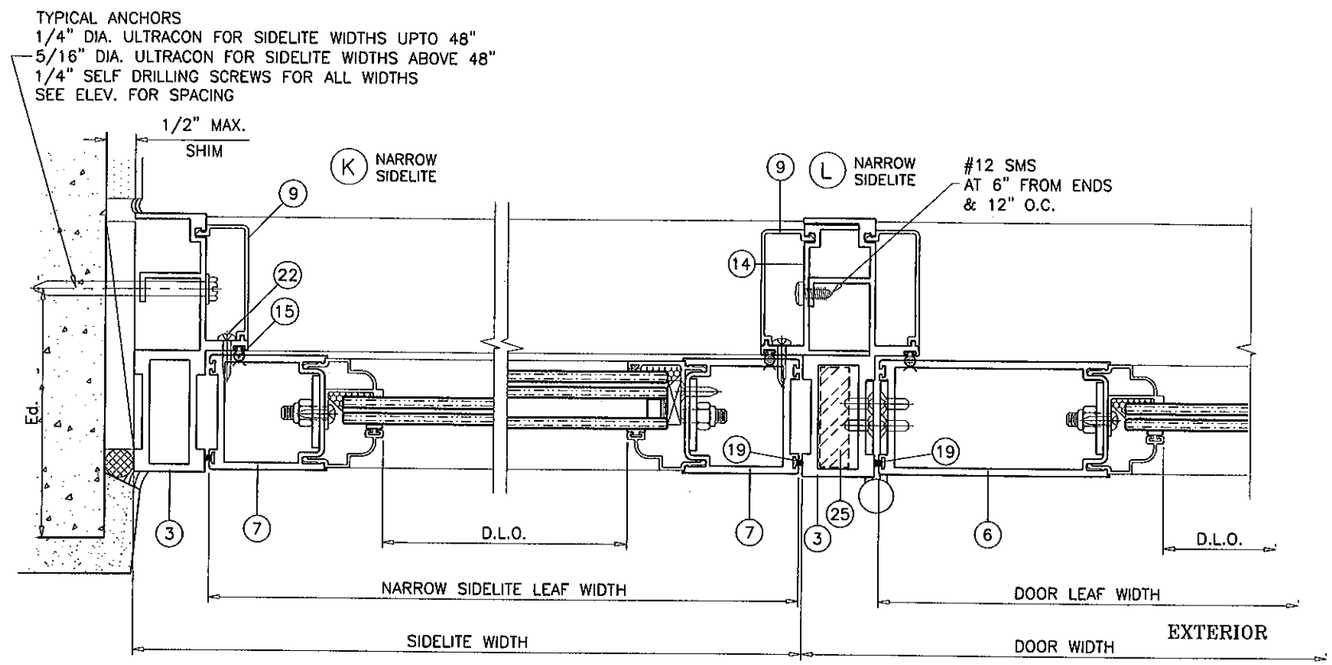

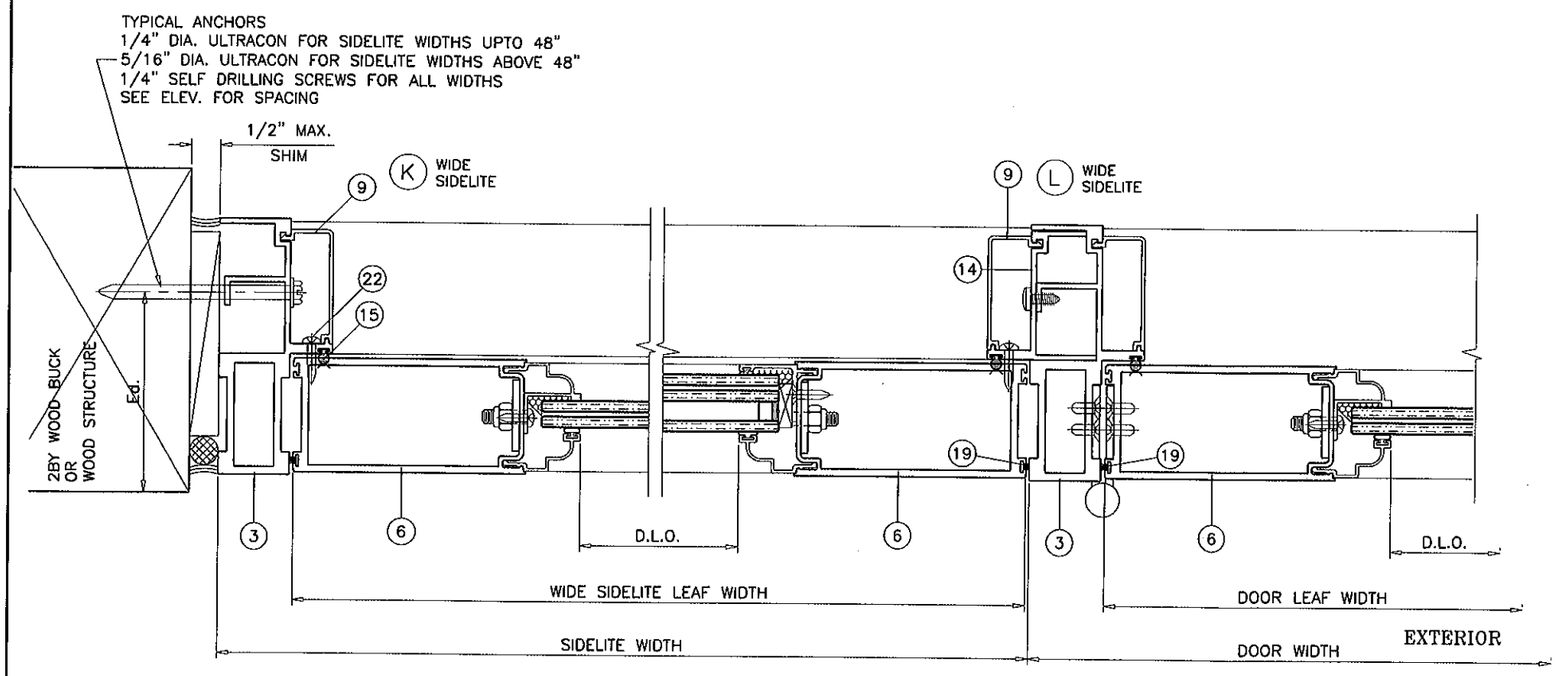

PRODUCT REVISED
as complying with the Florida Building Code
Acceptance No. 12-0223.05
Expiration Date 5/22/13
By Ishaq Lhanda
Miami Dade Product Control

Engr: JAVAD AHMAD
CIVIL
FLA. PE # 70592
C.A.N. 3538
JUN 07 2012

AL-FAROOQ CORPORATION
ENGINEERS & PRODUCT DEVELOPMENT
1235 S.W. 87 AVE
MIAMI, FLORIDA 33174
TEL. (305) 264-8100 FAX. (305) 262-6978
COMP-ANL\W08-23SIW

SERIES 500 ALUM OUTSWING ENTRANCE DOOR (L.M.I.)

SIW IMPACT WINDOWS, LLC.
975 S. CONGRESS AVE. #102
DELRAY BEACH, FL. 33445
TEL. (561) 274-9392 FAX. (561) 274-9262

revisions:

no	date	by	description
A	05.07.08		REV. PER BCCO COMMENTS
B	10.26.08		GENERAL REV.
C	10.07.09		GENERAL REV.
D	11.25.09		NO CHANGE THIS SHEET
E	01.23.12		UPDATED TO 2010 FBC

date: 03-06-08
scale: 3/8" = 1"
dr. by: HAMID
chk. by:

drawing no.
W08-23

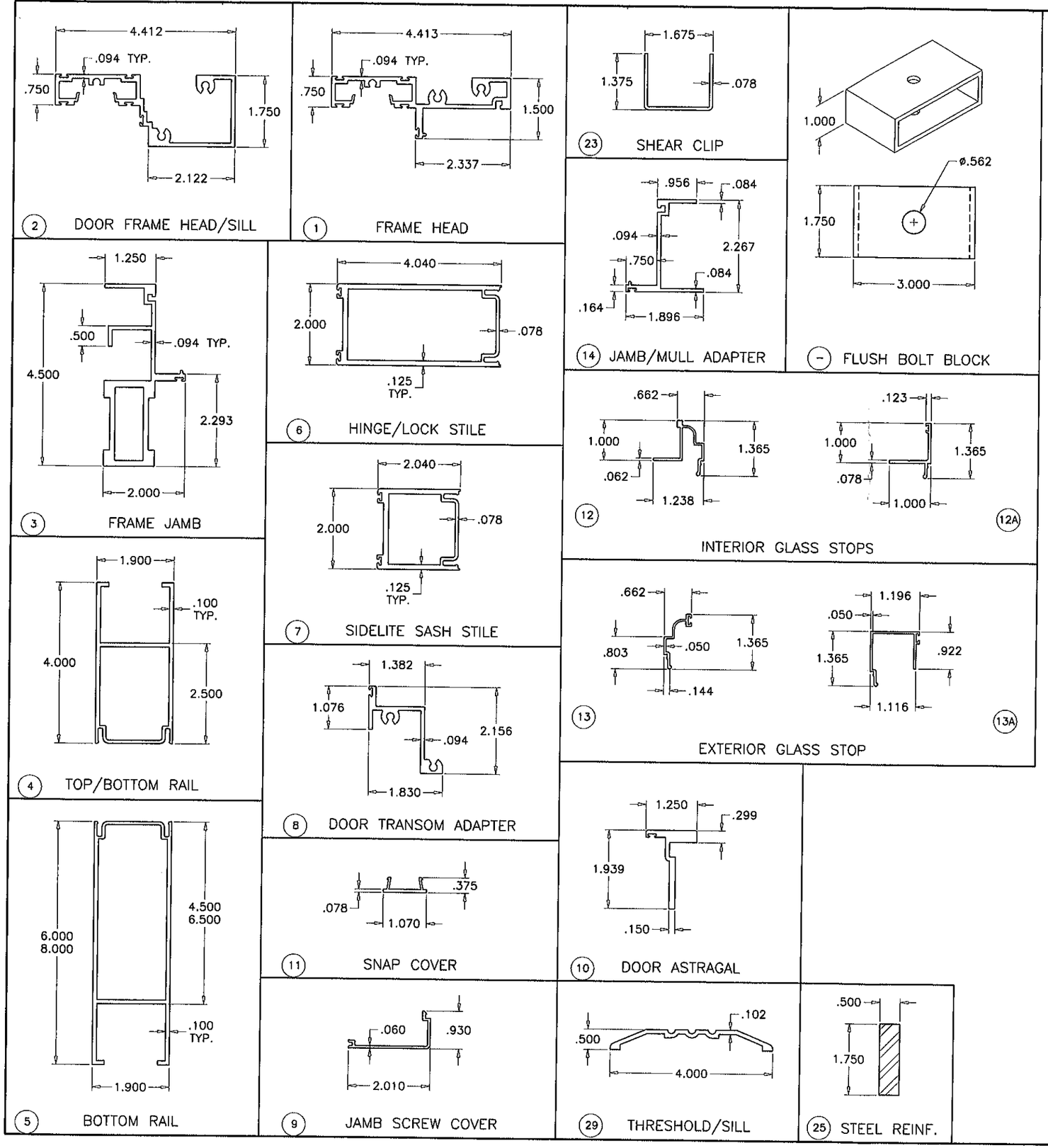

PRODUCT REVISED
as complying with the Florida
Building Code
Acceptance No 12-0223.05
Expiration Date 5/22/12
By Ishaq I. Chanda
Miami Dade Product Control

Engr: JAVAD AHMAD
CIVIL
FLA. PE # 70592
C.A.N. 3538

JUN 07 2012

AL-FAROOQ CORPORATION
ENGINEERS & PRODUCT DEVELOPMENT
1235 S.W. 87 AVE
MIAMI, FLORIDA 33174
TEL. (305) 264-8100 FAX. (305) 262-6978
COMP-ANL\W08-23SIW

SERIES 500 ALUM OUTSWING ENTRANCE DOOR (L.M.I.)

SIW IMPACT WINDOWS, LLC.
975 S. CONGRESS AVE. #102
DELRAY BEACH, FL. 33445
TEL. (561) 274-9392 FAX. (561) 274-9262

revisions:

no	date	by	description
A	05.07.08		REV. PER BCCO COMMENTS
B	10.26.08		GENERAL REV.
C	10.07.09		GENERAL REV.
D	11.25.09		NO CHANGE THIS SHEET
E	01.23.12		NO CHANGE THIS SHEET

date: 03-06-08
scale: 3/8" = 1"
dr. by: HAMID
chk. by:

drawing no.
W08-23

ITEM #	PART #	REQD.	DESCRIPTION	MATERIAL	MANF./SUPPLIER/REMARKS
1	WDF-023	AS REQD.	FRAME HEAD	6063-T6	–
2	DWF-013A	1	DOOR FRAME HEAD/SILL	6063-T6	–
3	DWF-008	2/DOOR	FRAME JAMB	6063-T6	–
4	DWF-002	1/ LEAF	DOOR TOP/BOTTOM RAIL	6063-T6	–
5	DWF-003	1/ LEAF	DOOR BOTTOM RAIL	6063-T6	–
6	DWF-001	2/ LEAF	HINGE STILE/LOCK STILE	6063-T6	–
7	DWF-010	2/ LEAF	SIDELITE SASH STILE	6063-T6	–
8	DWF-009	AS REQD.	DOOR TRANSOM ADAPTER	6063-T6	–
9	DWF-011	AS REQD.	SCREW COVER	6063-T5	–
10	DWF-006	AS REQD.	DOOR ASTRAGAL	6063-T6	–
11	DWF-012	AS REQD.	SNAP COVER	6063-T5	–
12	DWF-005	AS REQD.	INTERIOR GLASS STOP	6063-T5	–
12A	DWF-024	AS REQD.	INTERIOR GLASS STOP	6063-T5	–
13	DWF-004	AS REQD.	EXTERIOR GLASS STOP	6063-T6	–
13A	SIW533	AS REQD.	EXTERIOR GLASS STOP	6063-T6	–
14	DWF-007	AS REQD.	DOOR JAMB/MULL ADAPTER	6063-T6	–
15	32082	–	FOAM-TITE W'STRIPPING	VINYL	AMESBURY
16	Q225X190	–	Q-LON 2 W'STRIPPING	VINYL	SCHLEGEL
17	5101-B	AS REQD.	GLASS STOP GASKET	SANTOPRENE	BY CENTRAL PLASTICS
18	.187 x .320 HT.	AS RQD.	FINSEAL PILE W'STRIPPING	–	ULTRAFAB
19	.187 x .200 HT.	AS RQD.	FINSEAL PILE W'STRIPPING	–	ULTRAFAB
20	#8 X 1/2"	–	ASTRAGAL SCREWS PH SMS	–	AT 4" FROM ENDS & 8" O.C.
21	#8 X 1/2"	AS REQD.	GLASS STOP SCREWS SELF DRILLING	–	AT 8" FROM ENDS & 15" O.C. MAX.
22	#12 X 1-1/4"	–	FIX. PANEL SCREWS PH SMS	–	AT 6" FROM ENDS & 17" O.C. MAX.
23	–	AS REQD.	SHEAR CLIP	ALUMINUM	–
24	SD44HD	4/LEAF	BUTT HINGES	–	STAINLESS STEEL
25	–	AS REQD.	MULLION REINFORCING	STEEL	–
26	#12 X 2"	2/ CORNER	FRAME ASSEMBLY SCREWS	ST. STEEL	PH SMS
27	#12 X 4"	1/ CORNER	FRAME ASSEMBLY SCREWS	ST. STEEL	PH SMS
28	#12 X 1/2"	AS REQD.	HINGE ASSEMBLY SCREWS	ST. STEEL	FH MS TYPE 23
29	20305	AS REQD.	THRESHOLD/SILL	6063-T6	–
30	DB019AV36	AS REQD.	DOOR BOTTOM SWEEP	ALUM/VINYL	BY CRL
31	SIW 521	–	FLUSH BOLT BLOCK	6063-T6	–
32	#2	–	FLUSH BOLTS	–	SULLIVAN & ASSOC.
33	M1805S	–	3 POINT LOCK	–	ADAMS RITE

LOCKS:

ACTIVE LEAF:

OPTION #1:

3 POINT LOCK ASSEMBLY (M1805S) BY 'ADAMS RITE'
WITH 4015 THROW BOLT AT 35-1/2" FROM BOTTOM
FLUSH BOLTS CONNECTED TO LOCK
KEY OPERATED ON EXTERIOR AND THUMB TURN ON
INTERIOR AND ENGAGING FRAME AT HEAD AND SILL

OPTION #2:

LOCK ASSEMBLY (KL4027 & KP4028) BY 'KWIKSET'
WITH THROW BOLT AT 35-1/2" FROM BOTTOM
KEY OPERATED ON EXTERIOR AND THUMB TURN ON
INTERIOR
MANUALLY OPERATED FLUSH BOLTS LOCATED AT
13-1/2" FROM BOTTOM AND 34" FROM TOP.

OPTION #3:

LOCK ASSEMBLY (W5110-STACT6) BY 'ASHLAND'
WITH THROW BOLT AT 35-1/2" FROM BOTTOM
FLUSH BOLTS CONNECTED TO LOCK
KEY OPERATED ON EXTERIOR AND THUMB TURN ON
INTERIOR AND ENGAGING FRAME AT HEAD AND SILL

INACTIVE LEAF

CONCEALED FLUSH BOLTS (FB-1202-914)
BY 'SULLIVAN & ASSOC.'
MANUALLY OPERATED LEVERS MOUNTED ON
INSIDE FACE OF LEAF STILE LOCATED AT
13-1/2" FROM BOTTOM AND 34" FROM TOP

NOTE: LOCKS MUST BE ENGAGED DURING
PERIODS OF HURRICANE WARNING.

HINGES:

4" X 4" ST. STEEL BUTT HINGES (DSB4NB OR S44HD)
AT 13" FROM TOP AND BOTTOM ENDS AND 26-5/8" O.C. MAX.
HINGE ATTACHED TO DOOR FRAME AND DOOR STILE
USING (4) #12 X 1" FH MS
3 HINGES PER LEAF UPTO 6/8 HIGH DOORS
4 HINGES PER LEAF DOORS HIGHER THAN 6/8

SEALANTS:

ALL JOINTS AND FRAME CONNECTIONS SEALED WITH
SMALL JOINT SEALER.

PRODUCT REVISED
as complying with the Florida
Building Code
Acceptance No 12-0223.15
Expiration Date 5/22/13
By Ishaq I. Ugenda
Miami Dade Product Control

Engr: JAVAD AHMAD
CIVIL
FLA. PE # 70592
C.A.N. 3538

JUN 07 2012

AL-FAROOQ CORPORATION
ENGINEERS & PRODUCT DEVELOPMENT
1235 S.W. 87 AVE
MIAMI, FLORIDA 33174
TEL. (305) 264-8100 FAX. (305) 262-6978

COMP-ANL\W08-23SIW

SERIES 500 ALUM OUTSWING ENTRANCE DOOR (L.M.I.)

SIW IMPACT WINDOWS, LLC.
975 S. CONGRESS AVE. #102
DELRAY BEACH, FL. 33445
TEL. (561) 274-9392 FAX. (561) 274-9262

revisions:

no	date	by	description
A	05.07.08		REV. PER BCCO COMMENTS
B	10.26.08		GENERAL REV.
C	10.07.09		GENERAL REV.
D	11.25.09		REV. PER BCCO COMMENTS
E	01.23.12		NO CHANGE THIS SHEET

date: 03-06-08
scale: 3/8" = 1"
dr. by: HAMID
chk. by:

drawing no.
W08-23

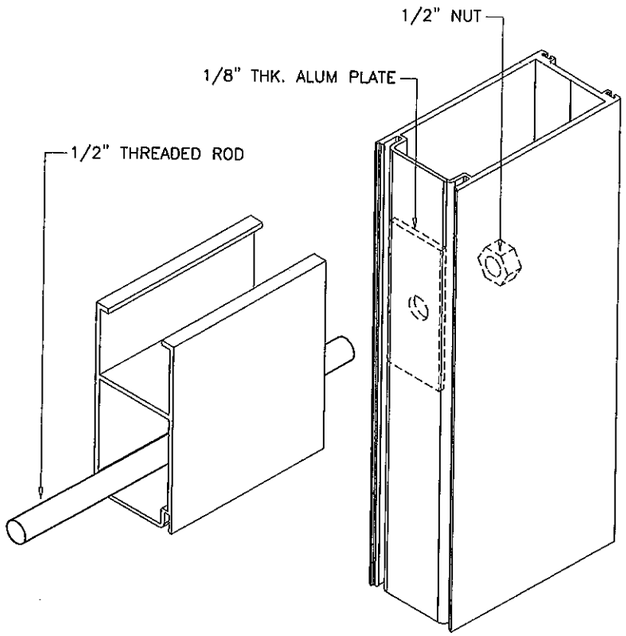

DOOR TOP CORNER

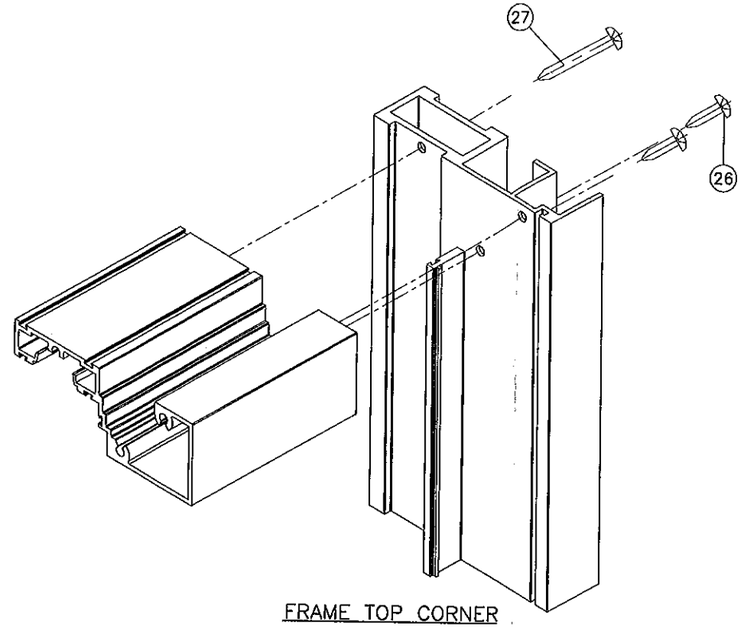

FRAME TOP CORNER

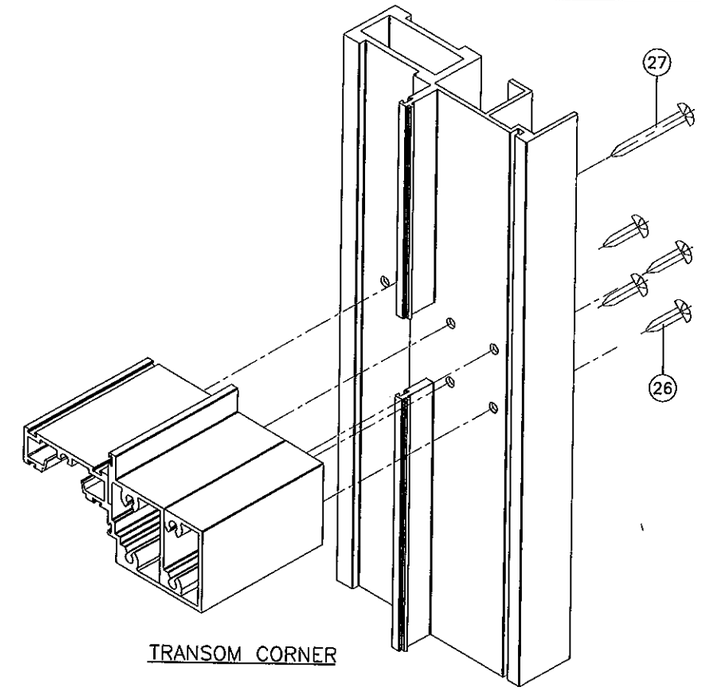

TRANSOM CORNER

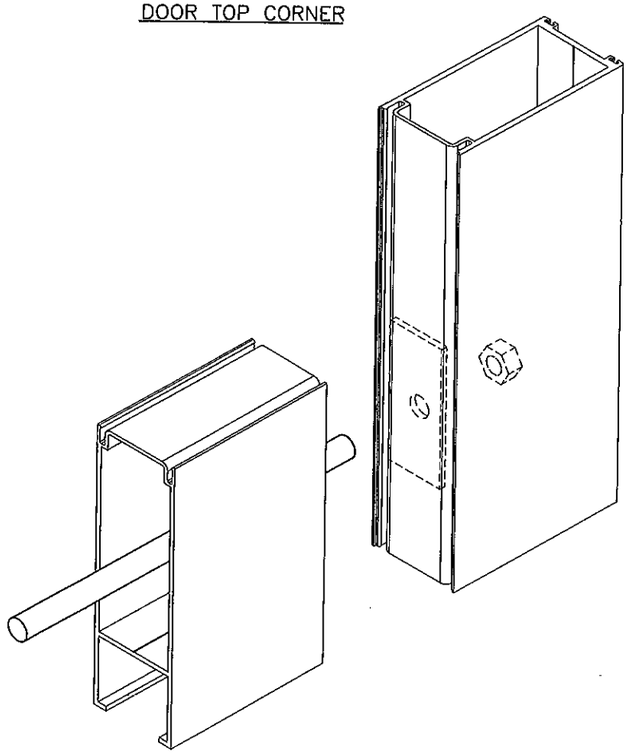

DOOR BOTTOM CORNER

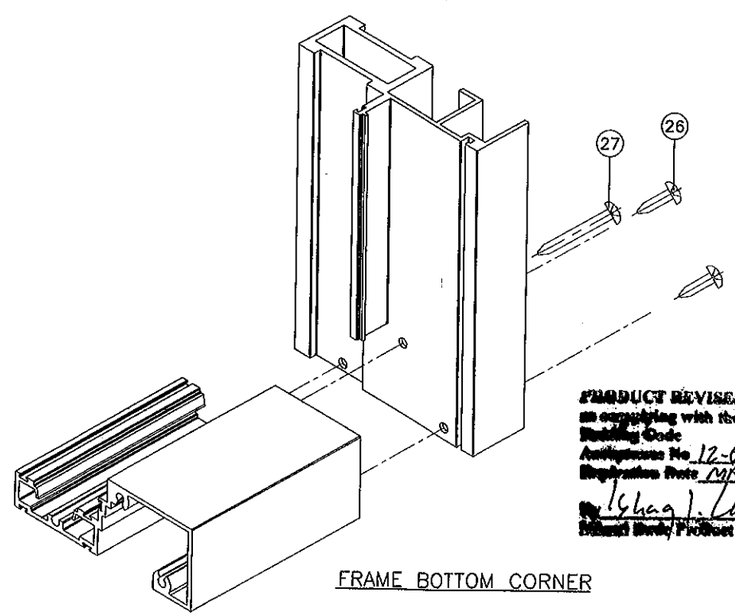

FRAME BOTTOM CORNER

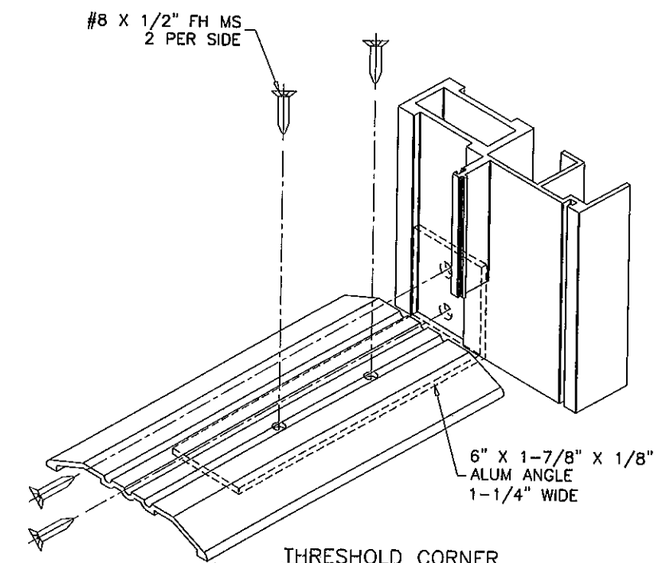

THRESHOLD CORNER

PRODUCT REVISED
in complying with the Florida
Building Code
Application No. 12-0223.05
Registration Date MAY 22, 2013
By Ishaq I. Chanda
Product Control

Engr: JAVAD AHMAD
CIVIL
FLA. PE # 70592
C.A.N. 3538

JUN 07 2012

AL-FAROOQ CORPORATION
ENGINEERS & PRODUCT DEVELOPMENT
1235 S.W. 87 AVE
MIAMI, FLORIDA 33174
TEL. (305) 264-8100 FAX. (305) 262-6978
COMP-ANL\W08-23SIW

SERIES 500 ALUM OUTSWING ENTRANCE DOOR (L.M.I.)

SIW IMPACT WINDOWS, LLC.
975 S. CONGRESS AVE. #102
DELRAY BEACH, FL. 33445
TEL. (561) 274-9392 FAX. (561) 274-9262

revisions:

no	date	by	description
A	05.07.08		REV. PER BCCO COMMENTS
B	10.26.08		GENERAL REV.
C	10.07.09		GENERAL REV.
D	11.25.09		NO CHANGE THIS SHEET
E	01.23.12		NO CHANGE THIS SHEET

date: 03-06-08
scale: 3/8" = 1"
dr. by: HAMID
chk. by:

drawing no.
W08-23

sheet 12 of 12