MIAMI-DADE COUNTY
DEPARTMENT OF PERMITTING, ENVIRONMENT, AND REGULATORY AFFAIRS (PERA)
BOARD AND CODE ADMINISTRATION DIVISION

MIAMI-DADE COUNTY
PRODUCT CONTROL SECTION
11805 SW 26 Street, Room 208
Miami, Florida 33175-2474
T (786) 315-2590 F (786) 315-2599
www.miamidade.gov/pera

NOTICE OF ACCEPTANCE (NOA)

R.C. Aluminum Industries, Inc.
2805 NW 75th Avenue
Miami, FL 33122

SCOPE:

This NOA is being issued under the applicable rules and regulations governing the use of construction materials. The documentation submitted has been reviewed and accepted by Miami-Dade County PERA - Product Control Section to be used in Miami Dade County and other areas where allowed by the Authority Having Jurisdiction (AHJ).

This NOA shall not be valid after the expiration date stated below. The Miami-Dade County Product Control Section (In Miami Dade County) and/or the AHJ (in areas other than Miami Dade County) reserve the right to have this product or material tested for quality assurance purposes. If this product or material fails to perform in the accepted manner, the manufacturer will incur the expense of such testing and the AHJ may immediately revoke, modify, or suspend the use of such product or material within their jurisdiction. PERA reserves the right to revoke this acceptance, if it is determined by Miami-Dade County Product Control Section that this product or material fails to meet the requirements of the applicable building code.

This product is approved as described herein, and has been designed to comply with the Florida Building Code, including the High Velocity Hurricane Zone.

DESCRIPTION: Series "600Y–CA" Aluminum Single Hung Window – L.M.I.

APPROVAL DOCUMENT: Drawing No. **W04–88**, titled "Series 600Y–CA Alum Single Hung Window (L.M.I.)", sheets 1 thru 7 of 7, dated 10/15/04, with revision C dated 02/07/12, prepared by Al–Farooq Corporation, signed and sealed by Javad Ahmad, P.E., bearing the Miami–Dade County Product Control Revision stamp with the Notice of Acceptance number and expiration date by the Miami-Dade County Product Control Section.

MISSILE IMPACT RATING: Large and Small Missile Impact Resistant

LABELING: Each unit shall bear a permanent label with the manufacturer's name or logo, city, state, model/series, and following statement: "Miami-Dade County Product Control Approved", unless otherwise noted herein.

RENEWAL of this NOA shall be considered after a renewal application has been filed and there has been no change in the applicable building code negatively affecting the performance of this product.

TERMINATION of this NOA will occur after the expiration date or if there has been a revision or change in the materials, use, and/or manufacture of the product or process. Misuse of this NOA as an endorsement of any product, for sales, advertising or any other purposes shall automatically terminate this NOA. Failure to comply with any section of this NOA shall be cause for termination and removal of NOA.

ADVERTISEMENT: The NOA number preceded by the words Miami-Dade County, Florida, and followed by the expiration date may be displayed in advertising literature. If any portion of the NOA is displayed, then it shall be done in its entirety.

INSPECTION: A copy of this entire NOA shall be provided to the user by the manufacturer or its distributors and shall be available for inspection at the job site at the request of the Building Official.

This NOA **revises NOA # 09-0812.08** and consists of this page 1 and evidence pages E-1 and E-2, as well as approval document mentioned above.

The submitted documentation was reviewed by **Manuel Perez, P.E.**

MIAMI-DADE COUNTY APPROVED

4/20/12

NOA No. 12-0223.18
Expiration Date: July 26, 2012
Approval Date: May 03, 2012

R.C. Aluminum Industries, Inc.

NOTICE OF ACCEPTANCE: EVIDENCE SUBMITTED

A. DRAWINGS

1. Manufacturer's die drawings and sections.
2. Drawing No **W04–88**, Sheets 1 thru 7 of 7, titled "Series 600Y–CA Alum Single Hung Window (L.M.I.)", dated 10/15/04, with revision C dated 02/07/12, prepared by Al–Farooq Corporation, signed and sealed by Javad Ahmad, P.E.

B. TESTS

1. Test reports on: 1) Large Missile Impact Test per FBC, TAS 201–94
   2) Cyclic Wind Pressure Loading per FBC, TAS 203–94
   along with marked–up drawings and installation diagram of series 500Y aluminum single hung windows mulled together over aluminum fixed windows, prepared by Fenestration Testing Laboratory, Test Report No. **FTL–4013**, dated 12/05/03, signed and sealed by Edmundo J. Largaespada, P.E.
   (Submitted under NOA No.07–0522.09)
2. Test reports on: 1) Air Infiltration Test, per FBC, TAS 202–94
   2) Uniform Static Air Pressure Test, Loading per FBC TAS 202–94
   3) Water Resistance Test, per FBC, TAS 202–94
   4) Small Missile Impact Test per FBC, TAS 201–94
   5) Cyclic Wind Pressure Loading per FBC, TAS 203–94
   6) Forced Entry Test, per FBC 2411 3.2.1, TAS 202–94
   along with marked–up drawings and installation diagram of series 500Y aluminum single hung windows mulled together over aluminum fixed windows, prepared by Fenestration Testing Laboratory, Test Report No. **FTL–4032**, dated 12/05/03, signed and sealed by Edmundo J. Largaespada, P.E.
   (Submitted under NOA No. 07–0522.09)

C. CALCULATIONS

1. Anchor verification calculations and structural analysis, complying with FBC–2007, prepared by Al–Farooq Corporation, dated 03/10/10, signed and sealed by Javad Ahmad, P.E.
   (Submitted under previous NOA#09-0812.08)
2. Glazing complies with ASTM E1300-04

D. QUALITY ASSURANCE

1. Miami-Dade Department of Permitting, Environment, and Regulatory Affairs (PERA)

Manuel Perez, P.E.
Product Control Examiner
NOA No. 12-0223.18
Expiration Date: July 26, 2012
Approval Date: May 03, 2012

NOTICE OF ACCEPTANCE: EVIDENCE SUBMITTED

E. MATERIAL CERTIFICATIONS

1. Notice of Acceptance No. **11–0624.02** issued to **E.I. DuPont DeNemours & Co.**, Inc. for their "**DuPont SentryGlas® Interlayer**" dated 08/25/11, expiring on 01/14/17.

F. STATEMENTS

1. Statement letter of conformance, complying with FBC-2010, and of no financial interest, dated February 06, 2012, signed and sealed by Javad Ahmad, P.E.
2. Laboratory compliance letter for Test Reports No. **FTL–4013** and **FTL–4032,** issued by Fenestration Testing Laboratory, Inc., dated 12/05/03, both signed and sealed by Edmundo J. Largaespada, P. E.
   (Submitted under previous NOA No. 07–0522.09)

G. OTHERS

1. Notice of Acceptance No. **09–0812.08**, issued to R.C. Aluminum Industries, Inc. for their Series "600Y–CA" Aluminum Single Hung Window – L.M.I., approved on 04/07/10 and expiring on 07/26/12.

Manuel Perez, P.E.
Product Control Examiner
NOA No. 12-0223.18
Expiration Date: July 26, 2012
Approval Date: May 03, 2012

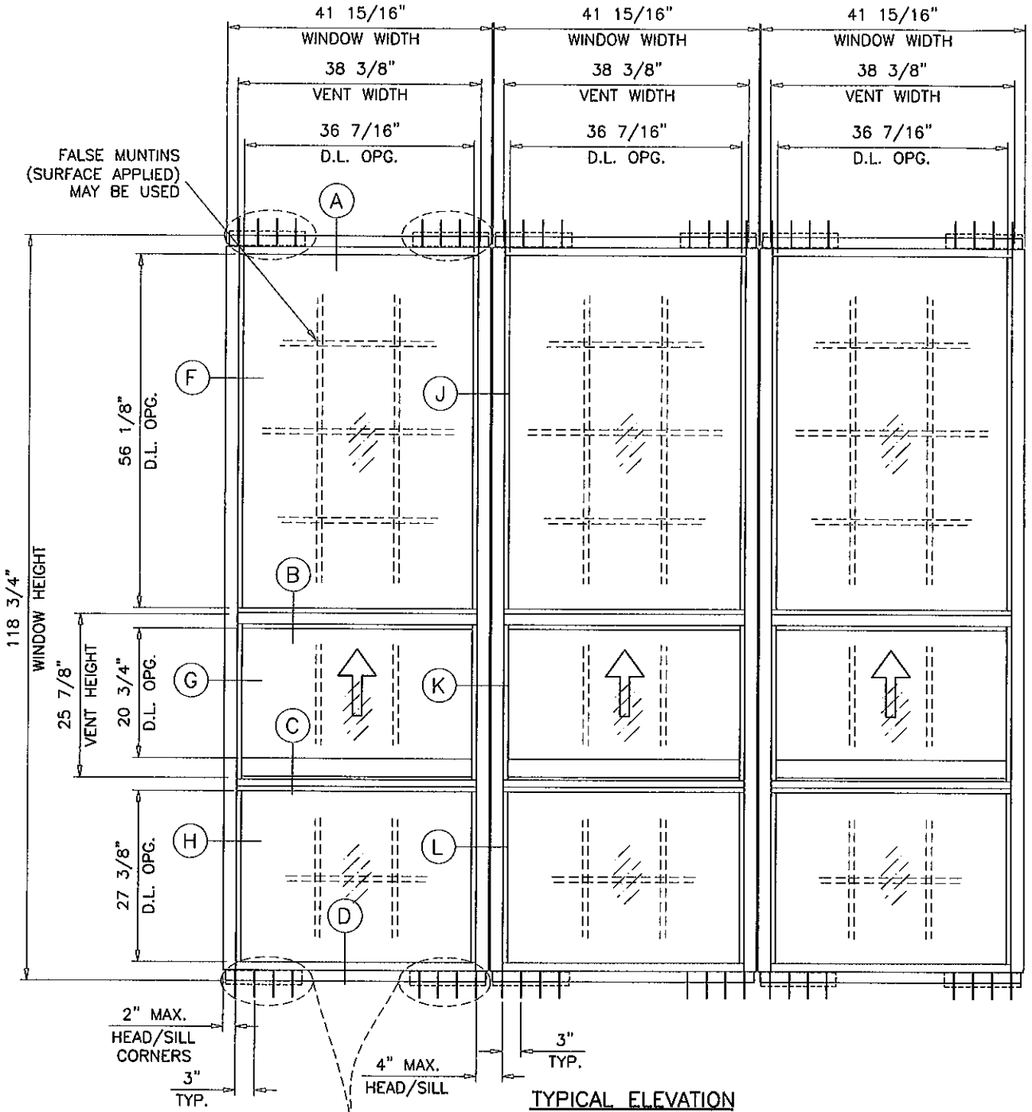

TYPICAL ELEVATION

TESTED UNIT

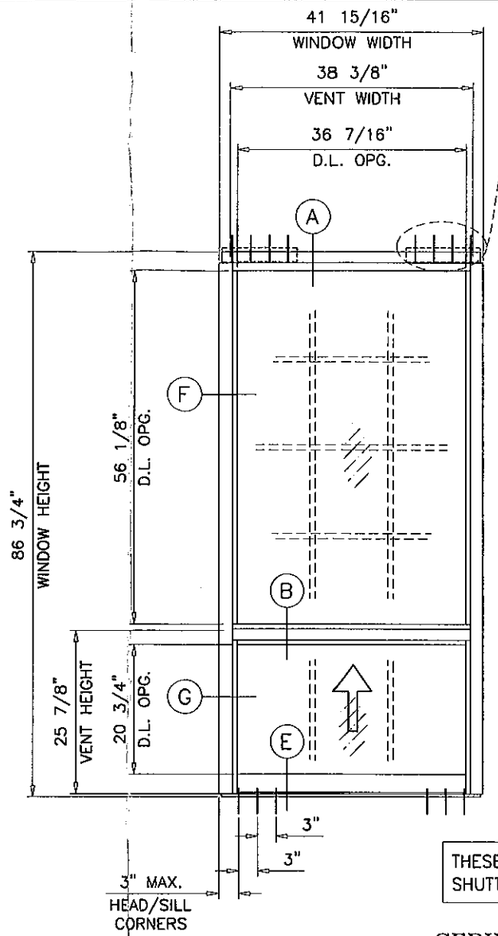

MIN. EDGE DISTANCE	NO. OF ANCHORS PER CHANNEL	ANCHOR CHANNEL LENGTH
3"	2	9"
2"	3	9"
1-1/2"	4	12"

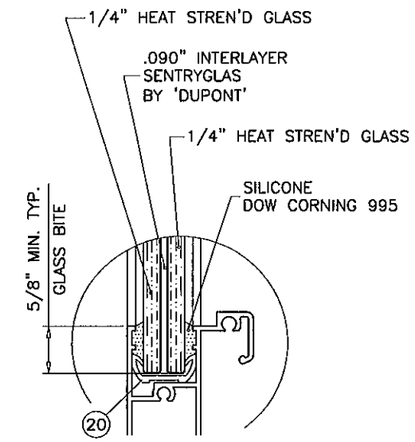

GLAZING DETAIL

MIN. EDGE DISTANCE	NO. OF ANCHORS PER CHANNEL	ANCHOR CHANNEL LENGTH
3"	2	9"
2"	3	9"
1-1/2"	4	12"

THESE WINDOWS ARE RATED FOR LARGE & SMALL MISSILE IMPACT. SHUTTERS ARE NOT REQUIRED.

SERIES 600Y-CA ALUM SINGLE HUNG WINDOW

DESIGN LOAD RATINGS FOR THESE WINDOWS TO BE AS PER CHARTS SHOWN ON SHEET 2.

THIS PRODUCT HAS BEEN DESIGNED AND TESTED TO COMPLY WITH THE REQUIREMENTS OF THE FLORIDA BUILDING CODE INCLUDING HIGH VELOCITY HURRICANE ZONE (HVHZ).

WOOD BUCKS BY OTHERS, MUST BE ANCHORED PROPERLY TO TRANSFER LOADS TO THE STRUCTURE.

ANCHORS SHALL BE AS LISTED, SPACED AS SHOWN ON DETAILS, ANCHORS EMBEDMENT TO BASE MATERIAL SHALL BE BEYOND WALL DRESSING OR STUCCO.

ANCHORING OR LOADING CONDITIONS NOT SHOWN IN THESE DETAILS ARE NOT PART OF THIS APPROVAL.

A LOAD DURATION INCREASE IS USED IN DESIGN OF ANCHORS INTO WOOD ONLY.

MATERIALS INCLUDING BUT NOT LIMITED TO STEEL/METAL SCREWS, THAT COME INTO CONTACT WITH OTHER DISSIMILAR MATERIALS SHALL MEET THE REQUIREMENTS OF THE FLORIDA BLDG. CODE SECTION 2003.8.4.

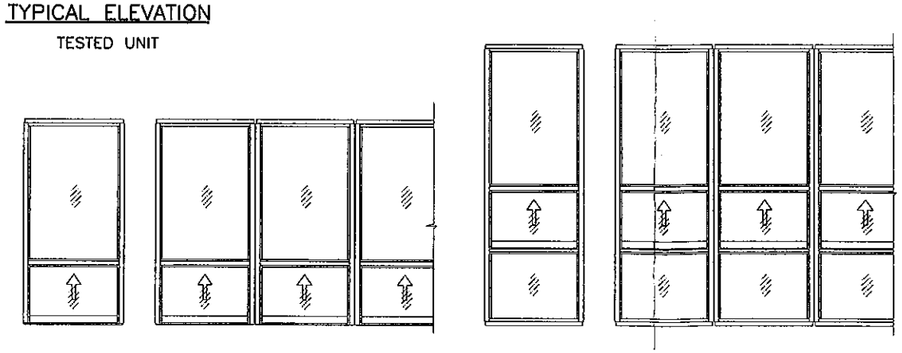

APPROVED CONFIGURATIONS

APPROVAL APPLIES TO INDIVIDUAL UNITS OF SINGLE HUNG WINDOWS OR SINGLE HUNG OVER FIXED WINDOWS. ALSO SIDE BY SIDE COMBINATIONS OF S.H. TO S.H. OR S.H./FIX. TO S.H./FIX. IN MODULES OF TWO OR MORE UNITS.

Engr: JAVAD AHMAD
CIVIL
FLA. PE # 70592
C.A.N. 3538

FEB 09 2012

PRODUCT REVISED
as complying with the Florida
Building Code
Acceptance No 12-0223.18
Expiration Date July 26, 2012
By Manuel Perez
Miami Dade Product Control

AL-FAROOQ CORPORATION
ENGINEERS & PRODUCT DEVELOPMENT
1235 S.W. 87 AVE
MIAMI, FLORIDA 33174
TEL. (305) 264-8100 FAX. (305) 262-6978
COMP-ANL\W04-88RC

R.C. ALUMINUM INDUSTRIES INC.
2805 N.W. 75 TH AVE.
MIAMI, FL. 33122
TEL. (305) 592-1515 FAX. (305) 592-2184

SERIES 600Y-CA ALUM SINGLE HUNG WINDOW (L.M.I.)

revisions:

no	date	by	description
A	06.19.09		UPDATED FOR 2007 FBC
B	02.01.10		REV. PER BCCO COMMENTS
C	02.07.12		UPDATED TO 2010 FBC

date: 10-15-04
scale: 1/2"=1'-0"
dr. by: HAMID
chk. by:

drawing no.
W04-88

SINGLE HUNG WINDOWS			
DESIGN LOAD CAPACITY – PSF			
WINDOW DIMS.		LAMINATED GLASS	
WIDTH	HEIGHT	EXT.(+)	INT.(–)
24"	48"	100.0	100.0
30"		100.0	100.0
36"		100.0	100.0
42"		100.0	100.0
48"		75.4	75.4
54"		51.7	51.7
60"		37.1	37.1
24"	54"	100.0	100.0
30"		100.0	100.0
36"		100.0	100.0
42"		100.0	100.0
48"		68.9	68.9
54"		47.0	47.0
60"		33.6	33.6
24"	60"	100.0	100.0
30"		100.0	100.0
36"		100.0	100.0
42"		100.0	100.0
48"		64.6	64.6
54"		43.7	43.7
60"		31.0	31.0
24"	66"	100.0	100.0
30"		100.0	100.0
36"		100.0	100.0
42"		99.6	99.6
48"		62.0	62.0
54"		41.4	41.4
60"		29.2	29.2
24"	72"	100.0	100.0
30"		100.0	100.0
36"		100.0	100.0
42"		99.5	99.5
48"		60.9	60.9
54"		40.1	40.1
60"		27.9	27.9
24"	78"	100.0	100.0
30"		100.0	100.0
36"		100.0	100.0
42"		99.5	99.5
48"		60.8	60.8
54"		39.5	39.5
24"	84"	100.0	100.0
30"		100.0	100.0
36"		100.0	100.0
42"		100.0	100.0
48"		60.8	60.8
42"	86–3/4"	100.0	100.0

NOTE:
GLASS CAPACITIES ON THIS SHEET ARE BASED ON ASTM E1300–04 (3 SEC. GUSTS) AND FLORIDA BUILDING COMMISSION DECLARATORY STATEMENT DCA05–DEC–219

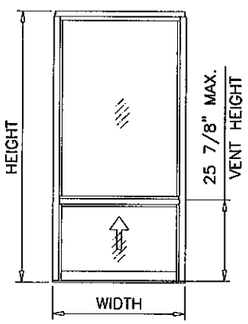

UNEQUAL LITES (ORIEL) SINGLE HUNG WINDOWS

WINDOWALL BOTTOM LITE CAPACITY – PSF			
WINDOW DIMS.		LAMINATED GLASS	
WIDTH	HEIGHT	EXT.(+)	INT.(–)
42"	36"	99.5	99.5
48"		62.7	62.7
54"		42.3	42.3

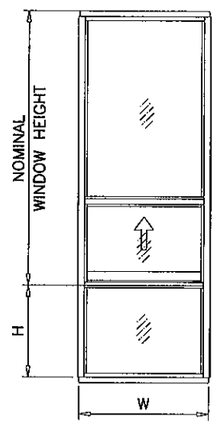

SINGLE HUNG OVER FIXED WINDOWS

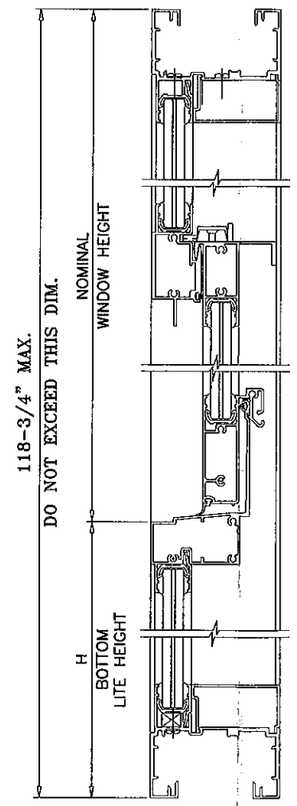

REFER TO CHARTS AT LEFT OF THIS PAGE TO OBTAIN SINGLE HUNG WINDOW CAPACITY.

REFER TO CHART ABOVE TO OBTAIN CAPACITY OF BOTTOM LITE OF WINDOWALL.

REFER TO CHARTS AT RIGHT OF THIS PAGE TO OBTAIN MULLION CAPACITY.

USE LOWEST VALUES OF OPTIONS CONSULTED.

REINFORCED MULLION CAPACITY CHART			
WINDOW DIMS.		DESIGN LOAD – PSF	
WIDTH (W)	MULL SPAN	EXT.(+)	INT.(–)
24"	72"	100.0	100.0
30"		100.0	100.0
36"		100.0	100.0
42"		100.0	100.0
48"		100.0	100.0
54"		100.0	100.0
60"		100.0	100.0
24"	78"	100.0	100.0
30"		100.0	100.0
36"		100.0	100.0
42"		100.0	100.0
48"		100.0	100.0
54"		100.0	100.0
60"		100.0	100.0
24"	84"	100.0	100.0
30"		100.0	100.0
36"		100.0	100.0
42"		100.0	100.0
48"		100.0	100.0
54"		100.0	100.0
60"		100.0	100.0
24"	90"	100.0	100.0
30"		100.0	100.0
36"		100.0	100.0
42"		100.0	100.0
48"		100.0	100.0
54"		100.0	100.0
24"	96"	100.0	100.0
30"		100.0	100.0
36"		100.0	100.0
42"		100.0	100.0
48"		100.0	100.0
54"		100.0	100.0
24"	102"	100.0	100.0
30"		100.0	100.0
36"		100.0	100.0
42"		100.0	100.0
48"		100.0	100.0
24"	108"	100.0	100.0
30"		100.0	100.0
36"		100.0	100.0
42"		100.0	100.0
48"		100.0	100.0

REINFORCED MULLION CAPACITY CHART			
WINDOW DIMS.		DESIGN LOAD – PSF	
WIDTH (W)	MULL SPAN	EXT.(+)	INT.(–)
24"	114"	100.0	100.0
30"		100.0	100.0
36"		100.0	100.0
42"		100.0	100.0
24"	120"	100.0	100.0
30"		100.0	100.0
36"		100.0	100.0
42"		100.0	100.0

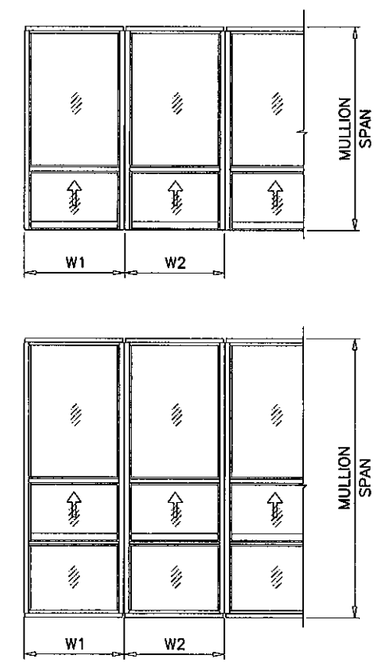

$$\text{WIDTH (W)} = \frac{W1 + W2}{2} + 3/4"$$

Engr: JAVAD AHMAD
CIVIL
FLA. PE # 70592
C.A.N. 3538

FEB 09 2012

PRODUCT REVISED
as complying with the Florida Building Code
Acceptance No 12-0223.18
Expiration Date JULY 26, 2012
By Manuel Diaz
Miami Dade Product Control

AL-FAROOQ CORPORATION
ENGINEERS & PRODUCT DEVELOPMENT
1235 S.W. 87 AVE
MIAMI, FLORIDA 33174
TEL. (305) 264-8100 FAX. (305) 262-6978
COMP–ANL\W04–88RC

SERIES 600Y–CA ALUM SINGLE HUNG WINDOW (L.M.I.)

R.C. ALUMINUM INDUSTRIES INC.
2805 N.W. 75 TH AVE.
MIAMI, FL. 33122
TEL. (305) 592–1515 FAX. (305) 592–2184

revisions:			
no	date	by	description
A	06.19.09		UPDATED FOR 2007 FBC
B	02.01.10		NO CHANGE THIS SHEET
C	02.07.12		NO CHANGE THIS SHEET

date: 10–15–04
scale: 1/2"=1'–0"
dr. by: HAMID
chk. by:

drawing no.
W04–88

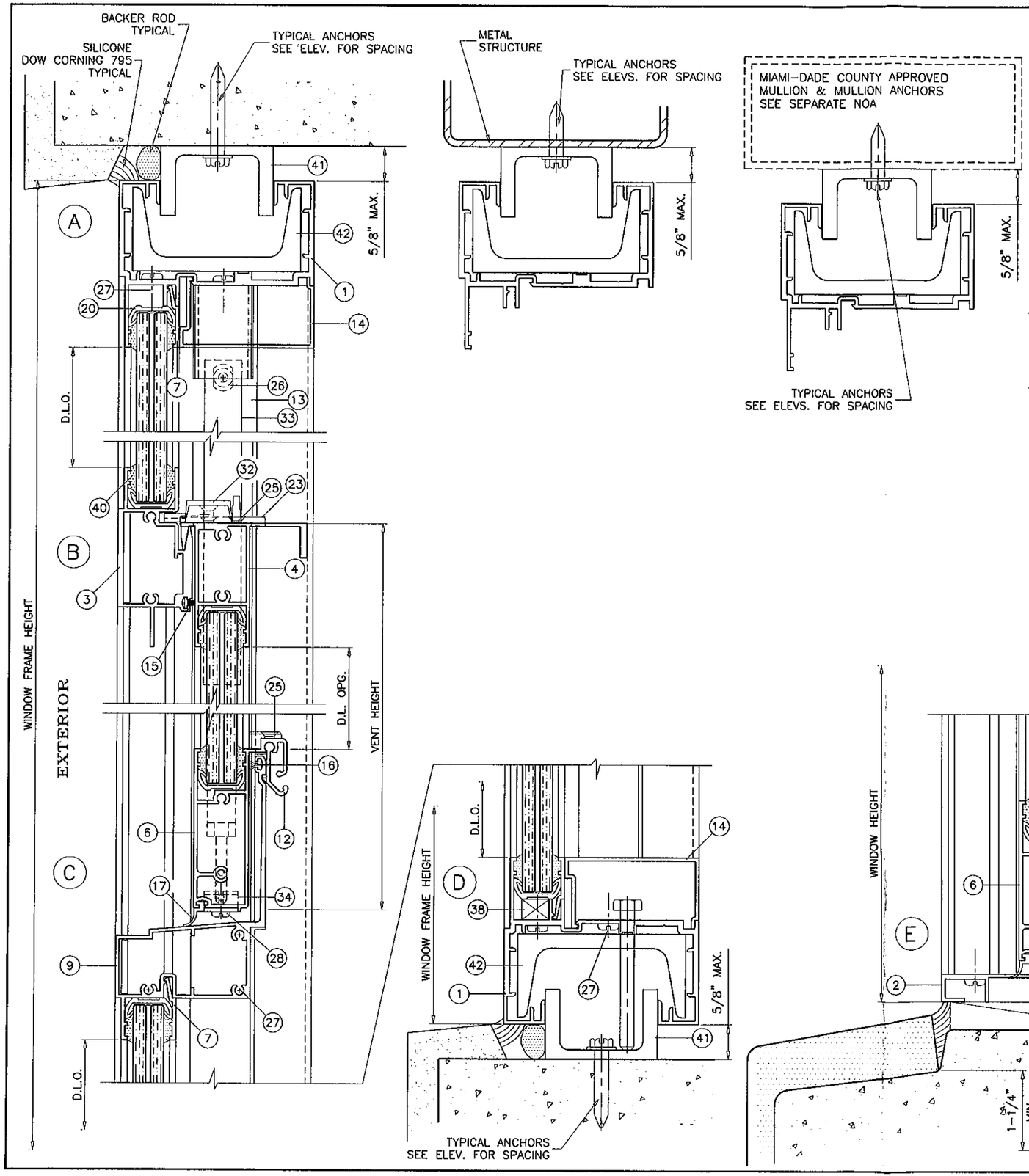

METAL STRUCTURE NOT BY RC ALUMINUM
MUST SUSTAIN LOADS IMPOSED BY GLAZING SYSTEM
AND TRANSFER THEM TO THE BUILDING STRUCTURE.

TYPICAL ANCHORS: SEE ELEV. FOR SPACING

TYPE 'A'– 1/4" HILTI KWIK-CON II (Fu=163 KSI, Fy=157 KSI)
DIRECTLY INTO fc'=4000 PSI CONCRETE
1-1/4" MIN. EMBED INTO CONCRETE

TYPE 'B'– 1/4" HILTI KWIK-FLEX SELF DRILLING SCREWS (Fu=92 KSI, Fy=120 KSI)
INTO MIAMI-DADE COUNTY APPROVED MULLIONS
INTO METAL STRUCTURES
STEEL : 1/8" THK. MIN. (Fy = 36 KSI MIN.)
ALUMINUM : 1/8" THK. MIN. (6063-T5 MIN.)
(STEEL IN CONTACT WITH ALUMINUM TO BE PLATED OR PAINTED)

TYPICAL EDGE DISTANCE
INTO CONCRETE AND MASONRY = SEE SHEET 1
INTO METAL STRUCTURE = 3/4" MIN.

SEALANT:

ALL JOINTS AND FRAME CONNECTIONS SEALED WITH DOW CORNING 795 SEALANT.

Engr: JAVAD AHMAD
CIVIL
FLA. PE # 70592
C.A.N. 3538

FEB 09 2012

PRODUCT REVISED
as complying with the Florida Building Code
Acceptance No 12-0223.18
Expiration Date JULY 26, 2012
By: Manuel Perez
Miami Dade Product Control

AL-FAROOQ CORPORATION
ENGINEERS & PRODUCT DEVELOPMENT
1235 S.W. 87 AVE
MIAMI, FLORIDA 33174
TEL. (305) 264-8100 FAX. (305) 262-6978
COMP-ANL\W04-88RC

SERIES 600Y-CA ALUM SINGLE HUNG WINDOW (L.M.I.)

R.C. ALUMINUM INDUSTRIES INC.
2805 N.W. 75 TH AVE.
MIAMI, FL. 33122
TEL. (305) 592-1515 FAX. (305) 592-2184

revisions:

no	date	by	description
A	06.19.09		UPDATED FOR 2007 FBC
B	02.01.10		REV. PER BCCO COMMENTS
C	02.07.12		NO CHANGE THIS SHEET

date: 10-15-04
scale: 1/2" = 1"
dr. by: HAMID
chk. by:

drawing no.
W04-88

sheet 3 of 7

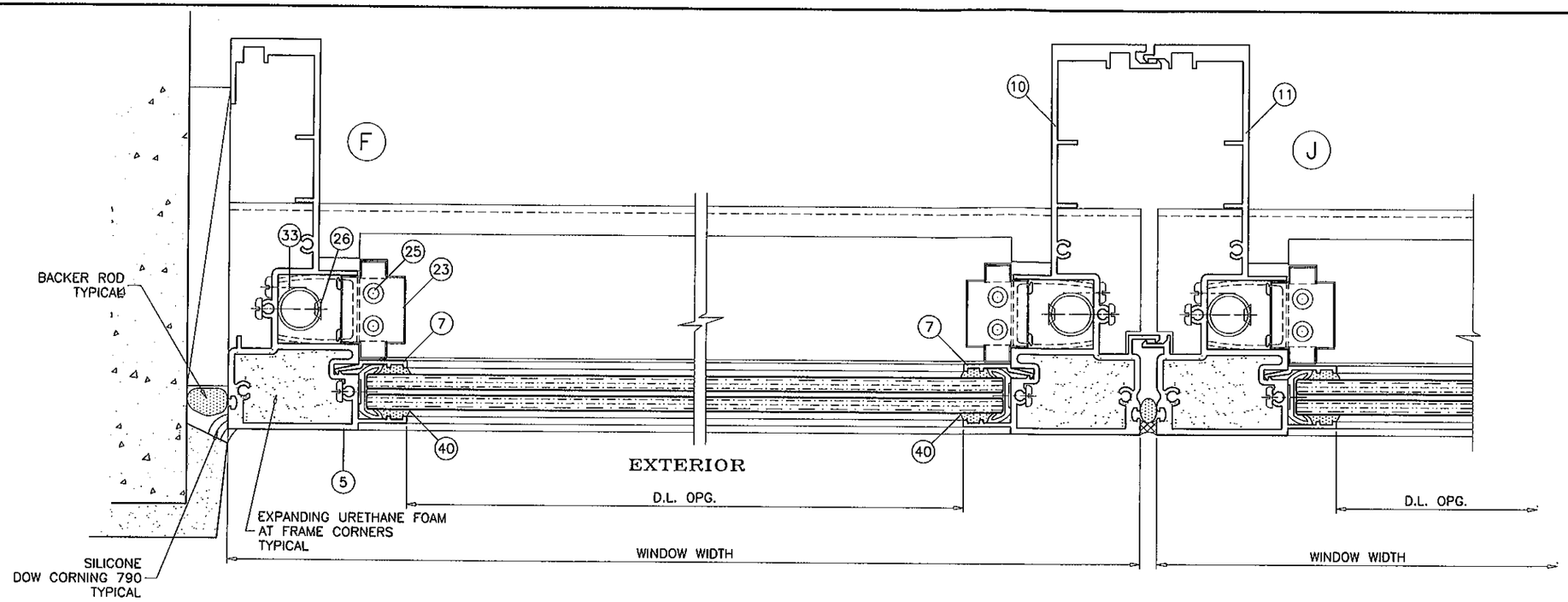

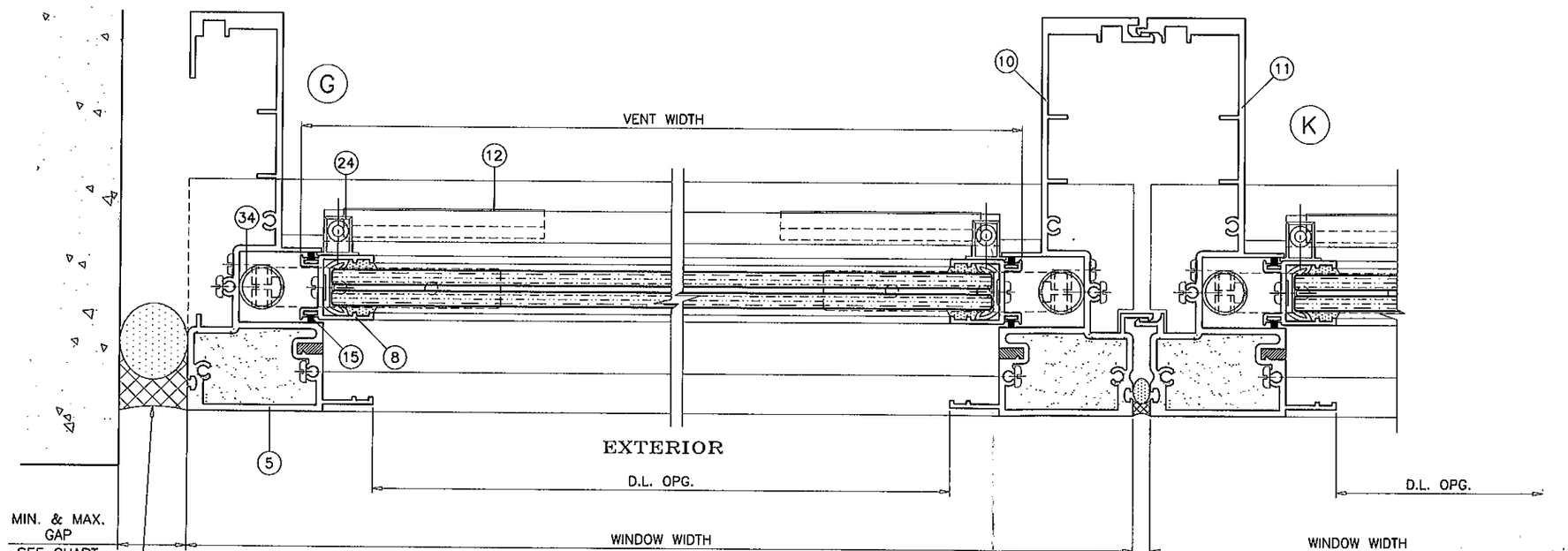

MAX. FRAME HEIGHT	GAP	
	MIN.	MAX.
108"	3/8"	3/4"
120"	1/2"	3/4"

Engr: JAVAD AHMAD
CIVIL
FLA. PE. # 70592
C.A.N. 3538

FEB 09 2012

PRODUCT REVISED
as complying with the Florida
Building Code
Acceptance No 12-0203.13
Expiration Date July 26, 2012
By
Miami Dade Product Control

AL-FAROOQ CORPORATION
ENGINEERS & PRODUCT DEVELOPMENT
1235 S.W. 87 AVE
MIAMI, FLORIDA 33174
TEL. (305) 264-3100 FAX. (305) 262-6978

COMP-ANL\W04-88RC

SERIES 600Y-CA ALUM SINGLE HUNG WINDOW (L.M.I.)

R.C. ALUMINUM INDUSTRIES INC.
2805 N.W. 75 TH AVE.
MIAMI, FL. 33122
TEL. (305) 592-1515 FAX. (305) 592-2184

revisions:

no	date	by	description
A	06.19.09		UPDATED FOR 2007 FBC
B	02.01.10		REV. PER BCCO COMMENTS
C	02.07.12		NO CHANGE THIS SHEET

date: 10-15-04
scale: 1/2" = 1"
dr. by: HAMID
chk. by:

drawing no.
W04-88

sheet 4 of 7

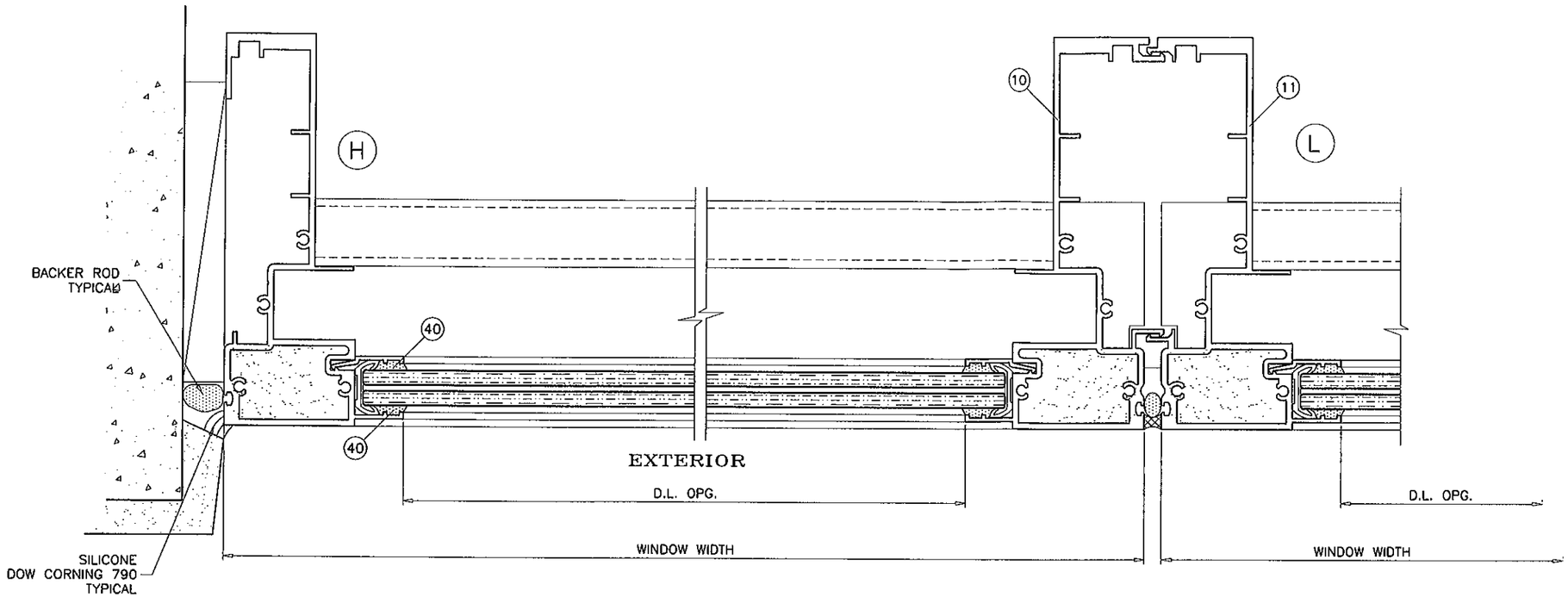

Engr: JAVAD AHMAD
CIVIL
FLA. PE # 70592
C.A.N. 3538

FEB 09 2012

PRODUCT REVISED
as complying with the Florida
Building Code
Acceptance No 12-0223.13
Expiration Date July 26, 2012
By Manuel Sere
Miami Dade Product Control

AL-FAROOQ CORPORATION
ENGINEERS & PRODUCT DEVELOPMENT
1235 S.W. 87 AVE
MIAMI, FLORIDA 33174
TEL. (305) 264-8100 FAX. (305) 262-6978

COMP-ANL\W04-88RC

SERIES 600Y-CA ALUM SINGLE HUNG WINDOW (L.M.I.)

R.C. ALUMINUM INDUSTRIES INC.
2805 N.W. 75 TH AVE.
MIAMI, FL. 33122
TEL. (305) 592-1515 FAX. (305) 592-2184

revisions:

no	date	by	description
A	06.19.09		UPDATED FOR 2007 FBC
B	02.01.10		REV. PER BCCO COMMENTS
C	02.07.12		NO CHANGE THIS SHEET

date: 10-15-04
scale: 1/2" = 1"
dr. by: HAMID
chk. by:

drawing no.
W04-88

sheet 5 of 7

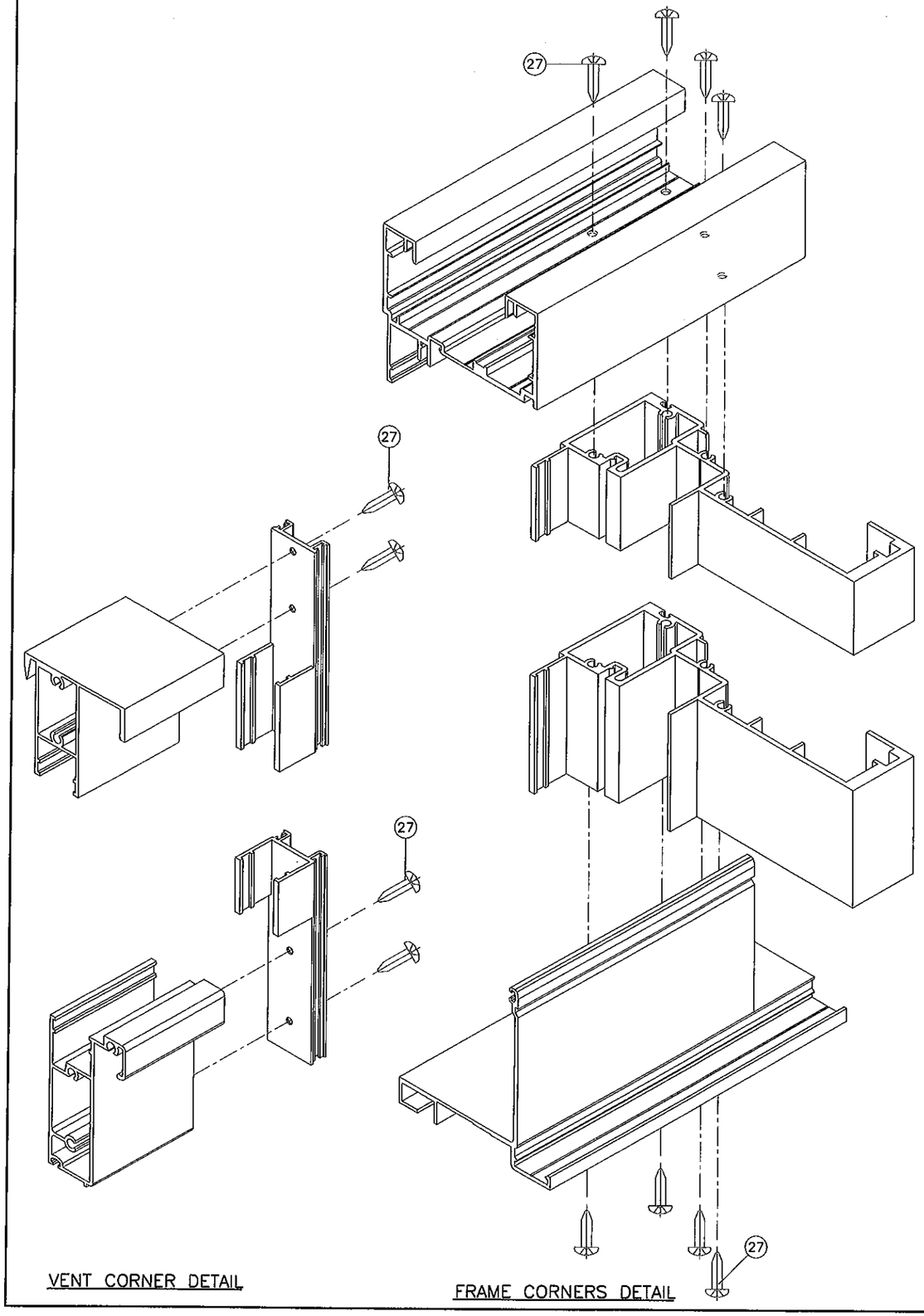

VENT CORNER DETAIL

FRAME CORNERS DETAIL

ITEM #	PART #	REQD.	DESCRIPTION	MATERIAL	MANF./SUPPLIER/REMARKS
1	500Y-017	AS REQD.	HEAD & FIXED SILL	6063-T6	AT FRAME
2	500Y-002	AS REQD.	FRAME SILL	–	AT FRAME
3	500Y-003	1	MEETING RAIL	6005-T5	AT FRAME
4	500Y-028	1	VENT TOP	6005-T5	SASH VENT
5	500Y-019	2	JAMB	6063-T6	AT FRAME
6	500Y-006	1	VENT BOTTOM	6063-T6	SASH VENT
7	500Y-007	AS REQD.	GLAZING BEAD	6063-T6	AT FIXED GLASS
8	500Y-008	2	VENT SIDE	6063-T6	SASH VENT
9	500Y-009	AS REQD.	SILL MEETING RAIL	6005-T5	AT FRAME
10	500Y-015	AS REQD.	MALE MULLION	6063-T6	–
11	500Y-016	AS REQD.	FEMALE MULLION	6063-T6	–
12	500Y-012	2/VENT	HANDICAP FINGER LOCK	6063-T6	SASH VENT
13	500Y-013	1	VENT STOP	6063-T6	AT TOP OF FRAME
14	550Y-018	AS REQD.	FRAME COVER	6063-T6	–
15	W33261NK	AS REQD.	WEATHERSTRIPPING PILE	–	AT VENT SIDE MEETING RAIL
16	WV-3189	AS REQD.	WEATHERSTIPPING GASKET	VINYL	SILL & SILL MEETING RAIL
17	V-048	AS REQD.	WEATHERSTRIPPING GASKET	NEOPRENE	BOTTOM OF SASH VENT
20	V-051	AS REQD.	MARINE GLAZED GASKET (DUROMETER 45-55)	VINYL	7/16" AND 9/16" AT BOTH LITES
23	P-012	2/ VENT	VENT TOP GUIDE PLASTIC M&M	NYLON	TOP OF SASH VENT
24	P-013	2/ VENT	VENT BOTTOM GUIDE PLASTIC M&M	NYLON	BOTTOM OF SASH VENT
25	–	AS REQD.	#8 X 3/8" LG. FH. SMS. ST/ST PHILLIPS	–	AT P-012, P-013 & PD-203
26	–	2	#8 X 1" LG. FH. SMS. ST/ST PHILLIPS	–	AT TOP OF BALANCE
27	–	AS REQD.	#10 X 1" LG. PH. SMS. ST/ST PHILLIPS	–	ASSEMBLY SCREWS
28	–	6	#10 X 3/4" LG. PH. SMS. ST/ST PHILLIPS	–	AT BALANCE CLIP
29	–	–	–	–	–
32	PD-203	2/ WDW	SASH LOCK	–	AT TOP OF SASH
33	–	2/ WDW	ULTRA-LIFT BALANCE #30	–	AT FRAME
34	–	2/ WDW	ULTRA-LIFT NON TILT BRACKET	–	–
37	–	–	–	–	–
38	–	–	3/8" X 1/2" X 4" LG. SETTING BLOCKS	NEOPRENE	–
40	DC-995	–	GLAZING COMPOUND	SILICONE	–
41	500Y-021	AS REQD.	ANCHOR CHANNEL	6063-T6	9 IN. & 12" LONG
42	500Y-020	AS REQD.	REINFORCING CHANNEL	6063-T6	9 IN. LONG

Engr: JAVAD AHMAD
CIVIL
FLA. PE # 70592
C.A.N. 3538

FEB 09 2012

PRODUCT REVISED
as complying with the Florida
Building Code
Acceptance No 12-0223.18
Expiration Date JULY 18, 2012
By Manuel Perez
Miami Dade Product Control

AL-FAROOQ CORPORATION
ENGINEERS & PRODUCT DEVELOPMENT
1235 S.W. 87 AVE
MIAMI, FLORIDA 33174
TEL (305) 264-8100 FAX. (305) 262-6978

COMP-ANL\W04-88RC

SERIES 600Y-CA ALUM SINGLE HUNG WINDOW (L.M.I.)

R.C. ALUMINUM INDUSTRIES INC.
2805 N.W. 75 TH AVE.
MIAMI, FL. 33122
TEL. (305) 592-1515 FAX. (305) 592-2184

revisions:

no	date	by	description
A	06.19.09		UPDATED FOR 2007 FBC
B	02.01.10		REV. PER BCCO COMMENTS
C	02.07.12		NO CHANGE THIS SHEET

date: 10-15-04
scale: 1/2" = 1"
dr. by: HAMID
chk. by:

drawing no.
W04-88

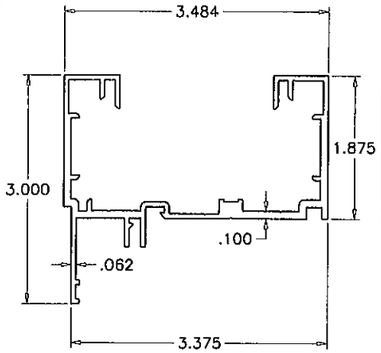

1 FRAME HEAD/SILL

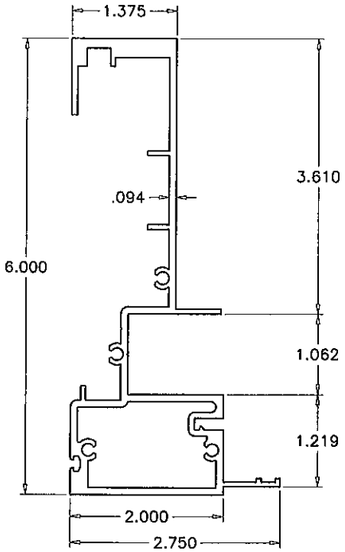

5 FRAME JAMB

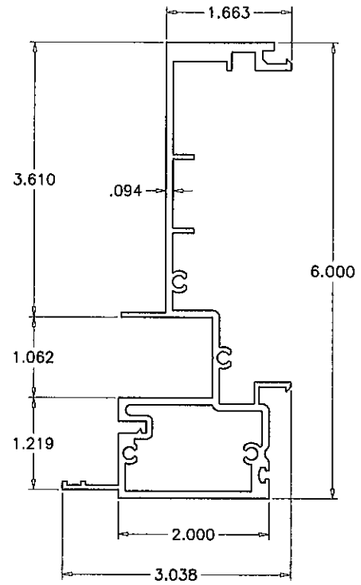

10 MALE MULLION

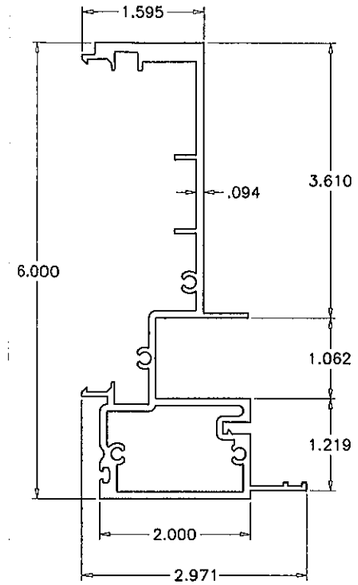

11 FEMALE MULLION

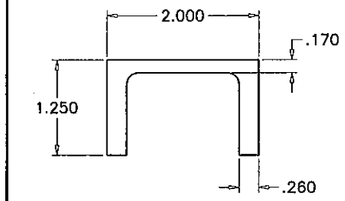

41 ANCHOR CHANNEL

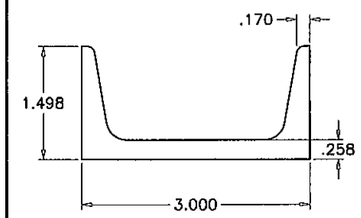

42 REINFORCING CHANNEL

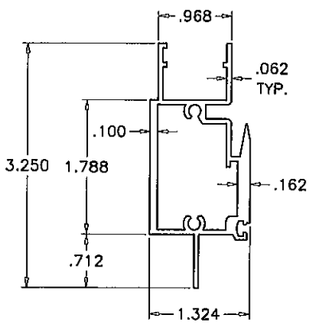

3 MEETING RAIL

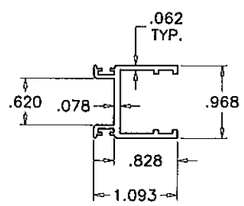

8 VENT SIDE RAIL

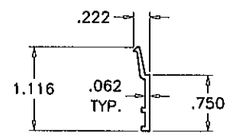

7 GLAZING BEAD

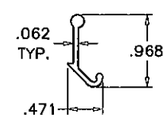

12 VENT LATCH

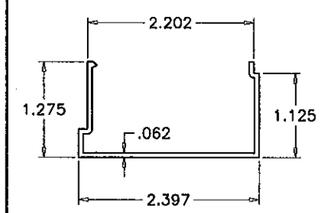

14 FRAME COVER

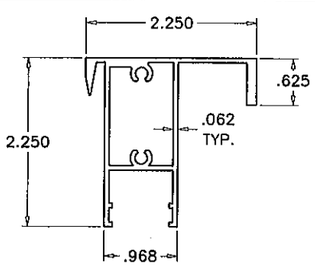

4 VENT TOP RAIL

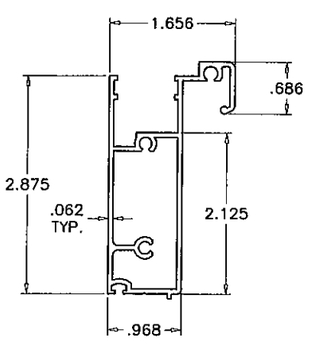

6 VENT BOTTOM RAIL

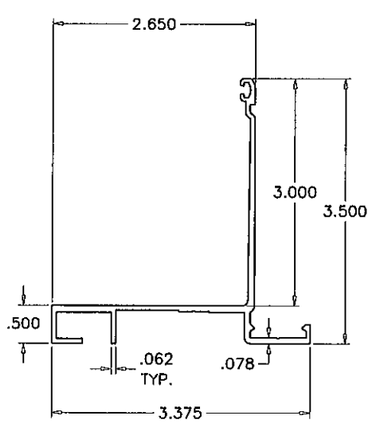

2 FRAME SILL

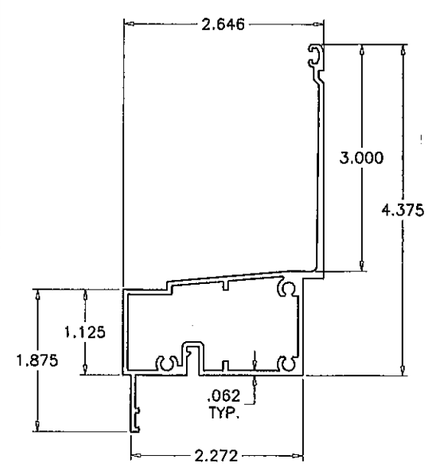

9 SILL MTG. RAIL W/ FIXED BOTTOM

Engr: JAVAD AHMAD
CIVIL
FLA. PE # 70592
C.A.N. 3538

FEB 29 2012

PRODUCT REVISED
as complying with the Florida
Building Code
Acceptance No 12-0223.18
Expiration Date July 26, 2012
By Manuel Perez
Miami Dade Product Control

AL-FAROOQ CORPORATION
ENGINEERS & PRODUCT DEVELOPMENT
1235 S.W. 87 AVE
MIAMI, FLORIDA 33174
TEL. (305) 264-8100 FAX. (305) 262-6978

COMP-ANL\W04-88RC

SERIES 600Y-CA ALUM SINGLE HUNG WINDOW (L.M.I.)

R.C. ALUMINUM INDUSTRIES INC.
2805 N.W. 75 TH AVE.
MIAMI, FL. 33122
TEL. (305) 592-1515 FAX. (305) 592-2184

revisions:

no	date	by	description
A	06.19.09		UPDATED FOR 2007 FBC
B	02.01.10		NO CHANGE THIS SHEET
C	02.07.12		NO CHANGE THIS SHEET

date: 10-15-04
scale: 1/2" = 1"
dr. by: HAMID
chk. by:

drawing no.
W04-88

sheet 7 of 7