MIAMI-DADE COUNTY
DEPARTMENT OF PERMITTING, ENVIRONMENT, AND REGULATORY AFFAIRS (PERA)
BOARD AND CODE ADMINISTRATION DIVISION

MIAMI-DADE COUNTY
PRODUCT CONTROL SECTION
11805 SW 26 Street, Room 208
Miami, Florida 33175-2474
T (786) 315-2590 F (786) 315-2599
www.miamidade.gov/pera/

NOTICE OF ACCEPTANCE (NOA)

R. C. Aluminum Industries, Inc.
2805 NW 75th Ave
Miami, FL 33122

SCOPE:

This NOA is being issued under the applicable rules and regulations governing the use of construction materials. The documentation submitted has been reviewed and accepted by Miami-Dade County PERA -Product Control Section to be used in Miami Dade County and other areas where allowed by the Authority Having Jurisdiction (AHJ).

This NOA shall not be valid after the expiration date stated below. The Miami-Dade County Product Control Section (In Miami Dade County) and/or the AHJ (in areas other than Miami Dade County) reserve the right to have this product or material tested for quality assurance purposes. If this product or material fails to perform in the accepted manner, the manufacturer will incur the expense of such testing and the AHJ may immediately revoke, modify, or suspend the use of such product or material within their jurisdiction. PERA reserves the right to revoke this acceptance, if it is determined by Miami-Dade County Product Control Section that this product or material fails to meet the requirements of the applicable building code.
This product is approved as described herein, and has been designed to comply with the Florida Building Code, including the High Velocity Hurricane Zone.

DESCRIPTION: Series 2400ST Aluminum Sliding Glass Door-L.M.I.

APPROVAL DOCUMENT: Drawing No. **W01-75 Rev I**, titled "Series- 2400ST Alum SLD. Glass Door (L.M.I.)", sheets 1, 2, 3, 3.1, 3.2, 4 through 9 of 9, prepared by AL-Farooq Corporation, dated 11/02/01and last revised on FEB 15, 2012, signed and sealed by Javad Ahmad, P.E., bearing the Miami-Dade County Product Control Revision stamp with the Notice of Acceptance number and expiration date by the Miami-Dade County Product Control Section.

MISSILE IMPACT RATING: Large and Small Missile Impact Resistant

Limitations:

1. See Design Pressure in sheet **2**. See anchors capacities in sheet **3** & **3.1**, lower capacity shall control.
2. Max load bearing shim not to exceed ½" at head, ¾" at sill (high strength poured & hardened grout) per sheet **4** and 5/8" at jambs per sheet **5**.

LABELING: Each unit shall bear a permanent label with the manufacturer's name or logo, city, state and sSeries and following statement: "Miami-Dade County Product Control Approved", noted herein.

RENEWAL of this NOA shall be considered after a renewal application has been filed and there has been no change in the applicable building code negatively affecting the performance of this product.

TERMINATION of this NOA will occur after the expiration date or if there has been a revision or change in the materials, use, and/or manufacture of the product or process. Misuse of this NOA as an endorsement of any product, for sales, advertising or any other purposes shall automatically terminate this NOA. Failure to comply with any section of this NOA shall be cause for termination and removal of NOA.

ADVERTISEMENT: The NOA number preceded by the words Miami-Dade County, Florida, and followed by the expiration date may be displayed in advertising literature. If any portion of the NOA is displayed, then it shall be done in its entirety.

INSPECTION: A copy of this entire NOA shall be provided to the user by the manufacturer or its distributors and shall be available for inspection at the job site at the request of the Building Official.
This NOA **revises NOA # 10-1118.02** and consists of this page 1 and evidence pages E-1, as well as approval document mentioned above.
The submitted documentation was reviewed by **Ishaq I. Chanda, P.E.**

MIAMI-DADE COUNTY APPROVED

5/31/12

NOTICE OF ACCEPTANCE: EVIDENCE SUBMITTED

A. DRAWINGS

1. Manufacturer's die drawings and sections (transferred from file # **10-1118.02**)
2. Drawing No. **W01-75 Rev I**, titled "Series- 2400ST Alum SLD. Glass Door (L.M.I.)", sheets 1, 2, 3, 3.1, 3.2, 4 through 9 of 9, prepared by AL-Farooq Corporation, dated 11/02/01and last revised on FEB 15, 2015, signed and sealed by Javad Ahmad, P.E.

Note: This revision consists of FBC 2010 notes only.

B. TESTS (transferred from file # **10-1118.02)**

1. Test reports on: 1) Air Infiltration Test, per FBC, TAS 202-94
   2) Uniform Static Air Pressure Test, Loading per FBC TAS 202-94
   3) Water Resistance Test, per FBC, TAS 202-94
   4) Large Missile Impact Test per FBC, TAS 201-94
   5) Cyclic Wind Pressure Loading per FBC, TAS 203-94
   6) Forced Entry Test, per FBC 2411 3.2.1, TAS 202-94

   Along with marked-up drawings and installation diagram of OXXO free jambs aluminum sliding glass door, Fenestration Testing Laboratory, Inc., Test Report No. **FTL-6096**, dated 7/16/10, signed and sealed by Jorge A. Causo, P. E.
2. Test reports on 1) Air Infiltration Test, per FBC, TAS 202-94
   2) Uniform Static Air Pressure Test, Loading per FBC TAS 202-94
   3) Water Resistance Test, per FBC, TAS 202-94
   4) Large Missile Impact Test per FBC, TAS 201-94
   5) Cyclic Wind Pressure Loading per FBC, TAS 203-94
   6) Forced Entry Test, per FBC 2411 3.2.1 (b) and TAS 202-94

   along with marked-up drawings and installation diagram of an aluminum sliding glass door, prepared by Fenestration Testing Laboratory, Inc., Test Report No. **FTL-01074**, dated 6/25/01, signed and sealed by Luis Figueredo, P.E. (transferred from file # **07-0124.08 / 06-0327.06.** Test conducted per SFBC, PA 201, 202 & 203-94, now known as TAS 201, 202 & 203-94)
3. Additional test report No. FTL 4615 per TAS 201, 202 & 203-94 for SGD, issued by Fenestration Testing Lab, dated June 16, 2005, signed & sealed by Edmundo Largaespada, P. E.

C. CALCULATIONS

1. Anchor verification calculations and structural analysis, complying with FBC-2007, prepared by Al Farooq Corporation, dated 11/11/10, signed and sealed by Javad Ahmad, P.E. (transferred from file # **10-1118.02**)
2. Glazing complies w/ ASTME-1300-02 & -04

D. QUALITY ASSURANCE

1. Miami Dade Department of Permitting, Environment, and Regulatory Affairs (PERA).

E. MATERIAL CERTIFICATIONS

1. Notice of Acceptance No. **11-0624.02** issued to E.I. DuPont DeNemours & Co., Inc. for their **"DuPont Sentry Glass ® interlayer"**, expiring on 01/14/17.

STATEMENTS

1. Statement letter of conformance to FBC 2010 and letter of no financial interest dated 02/13/12, and statement letter of conformance to FBC 2007, dated 11/11/10, prepared by Al Farooq Corporation both signed and sealed by Javad Ahmad, P.E.
2. Lab compliance as part of the above referenced test report.

G. OTHER

1. This NOA **revises** NOA # **10-1118.02**, expiring on 02/07/2017.
2. Test proposal, dated 06-01-09 and 02-07-05 approved by BCCO.

Ishaq I. Chanda

Ishaq I. Chanda, P.E.
Product Control Examiner
NOA No 12-0223.19
Expiration Date: February 07, 2017
Approval Date: May 10, 2012

DAYLITE OPENINGS:

DLO WIDTH = $\frac{\text{FRAME WIDTH}}{\text{NO. OF PANELS}}$ − 3.937

DLO HEIGHT = FRAME HEIGHT − 5.500

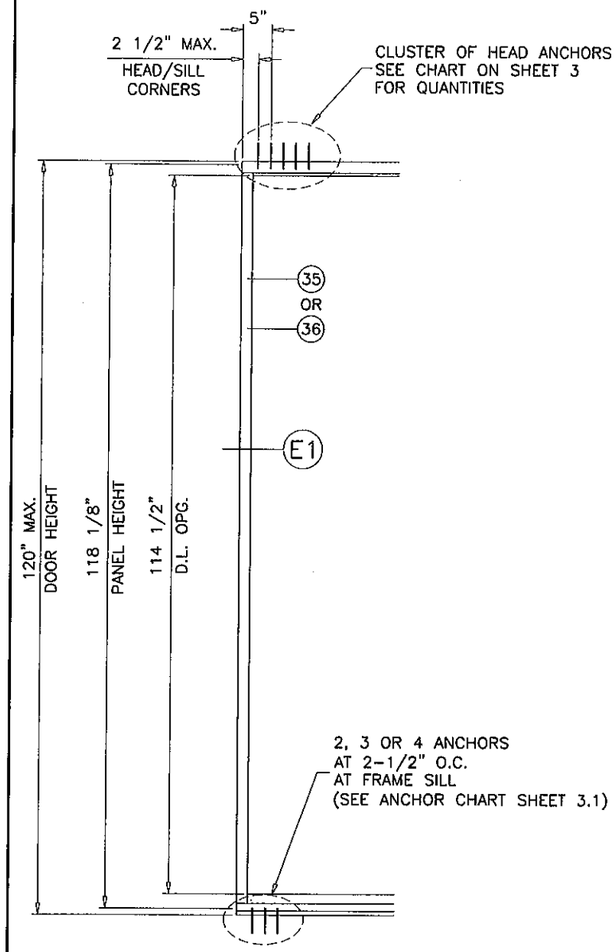

JAMB OPTION W/O ANCHORS

(120" MAX. DOOR HEIGHT USING ITEMS #35 OR #36)

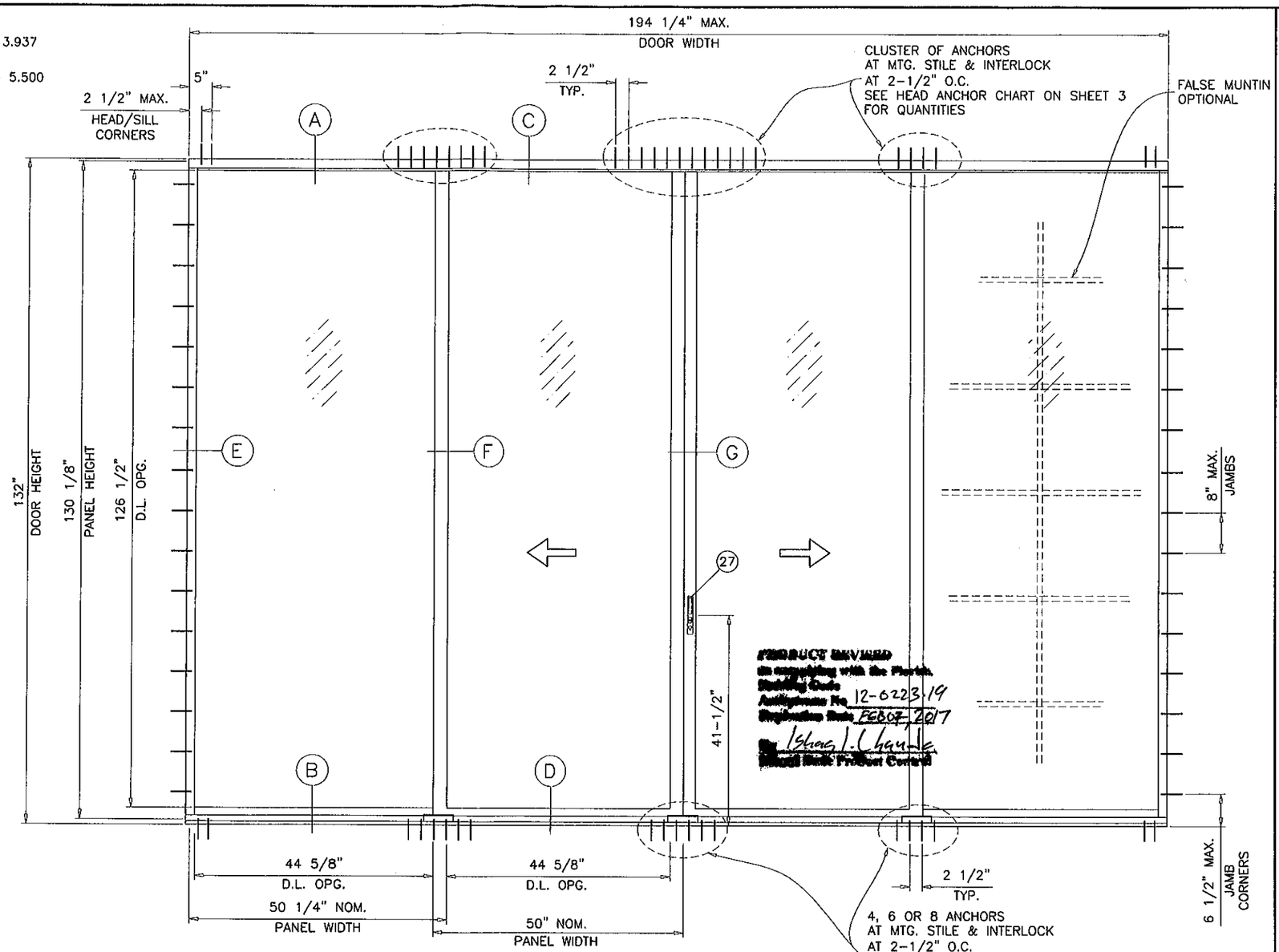

TYPICAL ELEVATION

TESTED UNIT (OXXO)

PRODUCT REVISED
in accordance with the Florida
Building Code
Application No. 12-0223.19
Expiration Date FEB 07, 2017
By Ishaq I. Chanda
Manual Date Product Control

SERIES-2400ST ALUMINUM SLIDING GLASS DOOR

SEE SHEET 2 FOR DESIGN LOAD CAPACITY OF DESIRED GLASS SIZE.

USING CHART ON SHEET 3 SELECT ANCHOR OPTION WITH DESIGN RATING MORE THAN DESIGN LOADS REQUIRED.

LOWER DESIGN PRESSURES FROM GLASS OR ANCHOR CHARTS (HEAD OR SILL) WILL APPLY TO ENTIRE SYSTEM.

DOORS MUST COMPLY WITH EGRESS REQUIREMENTS AS APPLICABLE PER FBC.

THIS PRODUCT HAS BEEN DESIGNED AND TESTED TO COMPLY WITH THE REQUIREMENTS OF THE FLORIDA BUILDING CODE INCLUDING HIGH VELOCITY HURRICANE ZONE (HVHZ).

1BY OR 2BY WOOD BUCKS BY OTHERS, MUST BE ANCHORED PROPERLY TO TRANSFER LOADS TO THE STRUCTURE.

ANCHORS SHALL BE AS LISTED, SPACED AS SHOWN ON DETAILS, ANCHORS EMBEDMENT TO BASE MATERIAL SHALL BE BEYOND WALL DRESSING OR STUCCO.

ANCHORING OR LOADING CONDITIONS NOT SHOWN IN THESE DETAILS ARE NOT PART OF THIS APPROVAL.

A LOAD DURATION INCREASE IS USED IN DESIGN OF ANCHORS INTO WOOD ONLY.

MATERIALS INCLUDING BUT NOT LIMITED TO STEEL/METAL SCREWS, THAT COME INTO CONTACT WITH OTHER DISSIMILAR MATERIALS SHALL MEET THE REQUIREMENTS OF THE FLORIDA BLDG. CODE SECTION 2003.8.4.

THESE DOORS ARE RATED FOR LARGE & SMALL MISSILE IMPACT. SHUTTERS ARE NOT REQUIRED.

Engr: JAVAD AHMAD
CIVIL
FLA. PE # 70592
C.A.N. 3538

FEB 15 2012

AL-FAROOQ CORPORATION
ENGINEERS & PRODUCT DEVELOPMENT
1235 S.W. 87 AVE
MIAMI, FLORIDA 33174
TEL. (305) 264-8100 FAX. (305) 262-6978

COMP-ANL\W01-75RC

SERIES-2400ST ALUM SLD. GLASS DOOR (L.M.I.)

R.C. ALUMINUM INDUSTRIES INC.
2805 N.W. 75 TH AVE.
MIAMI, FL. 33122
TEL. (305) 592-1515 FAX. (305) 592-2184

revisions:

no	date	by	description
F	06.03.09		UPDATED FOR 2007 FBC
G	08.05.10		GENERAL REVISION
H	03.16.11		REV PER BNC COMMENTS
I	02.13.12		UPDATED TO 2010 FBC

date: 11-02-01
scale: 1/2"=1'-0"
dr. by: HAMID
chk. by:

drawing no.
W01-75

DESIGN LOAD CAPACITY – PSF		
PANEL WIDTH NOMINAL INCHES	DOOR HEIGHT INCHES	9/16" GLASS EXT.(+)/INT.(–)
30	96	131.0
36		131.0
42		131.0
48		131.0
54		131.0
60		131.0
30	102	131.0
36		131.0
42		131.0
48		131.0
54		131.0
30	108	131.0
36		131.0
42		131.0
48		131.0
30	114	131.0
36		131.0
42		131.0
48		131.0
30	119–1/2	131.0
36		131.0
42		131.0
48		128.7
30	120	120.0
36		120.0
42		120.0
48		120.0
30	126	120.0
36		120.0
42		120.0
48		120.0
30	132	120.0
36		120.0
42		120.0
48		120.0

MAX. DOOR UNIT WIDTHS TO BE LIMITED TO 194–1/4 IN. TO BE USED WITH SINGLE NOM. PANEL WIDTHS PER ABOVE CHART

ITEM NO.	PART NUMBER	QUANTITY	DESCRIPTION	MATERIAL	MANF./SUPPLIER/REMARKS
1	2400ST–038	1	FRAME HEAD	6063–T6/6005–T5	–
1A	2400ST–018	1	ALT. FRAME HEAD	6063–T6	–
2	2400ST–039	1	FRAME SILL	6005–T5	–
2A	2400ST–010	1	ALT. FRAME SILL	6005–T5	–
3	2400ST–042	2	FRAME JAMB	6063–T6	–
3A	2400ST–001	2	ALT. FRAME JAMB	6063–T6	–
4	2400ST–008	1/MOV. PANEL	MOVING HORIZ. BOTT. RAIL	6063–T6	–
5	2400ST–009	1/FIX. PANEL	FIXED HORIZ. BOTT. RAIL	6063–T6	–
6	2400ST–006	1/MOV. PANEL	TOP MOVING RAIL	6063–T6	–
7	2400ST–007	1/FIX. PANEL	TOP FIXED RAIL	6063–T6	–
8	2400ST–004	1/FIX. PANEL	JAMB FIXED STILE	6063–T6	–
9	2400ST–002	1	JAMB FIX. STILE/LOCK STILE	6063–T6	–
10	2400ST–037	1/ PANEL	INTERLOCK	6005–T5	–
11	2400ST–005	1	MEETING STILE	6005–T5	–
12	2400ST–012	1	THRESHOLD FILLING TRACK (LENGTH = OPNG. WIDTH BETWEEN FIXED PANELS)	6063–T6	–
13	2400ST–011	–	SILL TRACK ANCHOR	6005–T5	–
13A	–	4/ CLIP	1/4–20 X 3/4" LG. SOCKET HEAD CAP SCREWS	ST/ST	–
14	2400ST–019	1	HEAD ADAPTER (LENGTH = OPNG. WIDTH BETWEEN FIXED PANELS)	6063–T6	–
15	2400ST–031	2	SILL TRACK PLATE (5–1/4" X 1/4" X 4" LONG)	ALUMINUM	AT EACH END
15A	2400ST–031	3	SILL TRACK PLATE (5–1/4" X 1/4" X 9" LONG)	ALUMINUM	AT INTERLOCK/ASTRAGAL STILES
16	2400ST–032	–	MTG. RAIL THRESHOLD SEAL	6063–T5	6" LONG
17	#10 X 1/2"	2	WEATHERSTRIP FASTENERS	–	–
18	V–027	–	BULB W'STRIPPING	VINYL	FP–712 PROTOTYPE
19	WV–2310	–	FLAP WEATHER SEAL	VINYL	WIBORG
20	V–026	–	BULB W'STRIPPING	VINYL	FP–198 PROTOTYPE
21	W31265NK	–	FIN PILE W'STRIPPING	–	ULTRAFAB
22	Q250X270	–	Q–LON W'STRIPPING	–	SCHLEGEL
24	V–020	AS REQD.	GLAZING GASKET (9/16" IMPACT GLASS), DUROMETER 75±5 SHORE A	VINYL	WV–1429 WIBORG
26	100–7101	2/MOV. PANEL	TANDEM WHEEL ASSEMBLY	–	WORLD IND. PRODUCTS INTL.
27	10–0030XX	1	STANDARD SLIDE SET LOCK (3 PLY METALLIC)	–	WORLD IND. PRODUCTS INTL.
28	–	1	LOCK KEEPER	–	–
29	–	–	DOOR BUMPER	–	1" DIA. X 3/4" LONG
30	2400ST–040	AS REQD.	INSIDE SCREEN TRACK	6063–T6	–
31	#10 X 1–1/2"	2/ PANEL	PANEL ASSBY. SCREWS	ST/ST	–
32	#10 X 1"	2/ CORNER	FRAME ASSBY. SCREWS	–	–
33	–	2	4–1/4" X .060" X 6" LONG PLATE	ALUMINUM	AT FRAME JAMB BOTTOM
34	–	–	5/8" X 1–1/2" X .1" PLATE @ LOCK STILE BOTTOM	ALUMINUM	FASTENED W/ #8 X 3/8" FH SMS
35	2400ST–071	1	FREE STANDING JAMB (FIX. SIDE)	6005–T5	–
36	2400ST–072	1	FREE STANDING JAMB (OPERABLE SIDE)	6005–T5	–

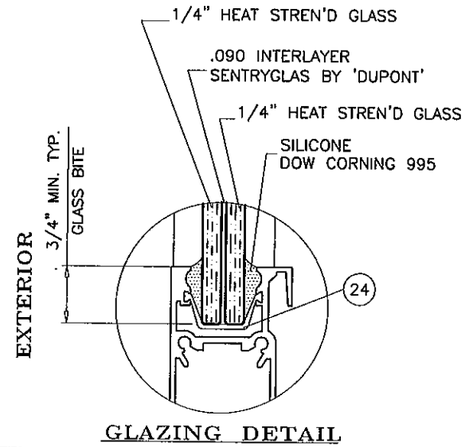

GLAZING DETAIL

SEALANTS:

ALL FRAME AND PANEL JOINT, INSTALLATION SCREWS AND HEADS OF ANCHOR SCREWS AT SILL TO BE SEALED WITH WHITE/ALUM COLORED SEALANT.

LOCKS:

SURFACE MOUNT THREE PLY HOOK LOCK BY 'WORLD INDUSTRIAL PRODUCTS' AT 41–1/2" FROM BOTTOM WITH KEEPERS AT LOCK POSITION.

NOTE:
GLASS CAPACITIES ON THIS SHEET ARE BASED ON ASTM E1300–04 (3 SEC. GUSTS) AND FLORIDA BUILDING COMMISSION DECLARATORY STATEMENT DCA05–DEC–219

PRODUCT REVISED
to complying with the Florida Building Code
Acceptance No. 12-0223.19
Expiration Date 2/7/17
By Shang I. Chang
Miami Dade Product Control

Engr: JAVAD AHMAD
CIVIL
FLA. PE # 70592
C.A.N. 3538
FEB 15 2012

AL-FAROOQ CORPORATION
ENGINEERS & PRODUCT DEVELOPMENT
1235 S.W. 87 AVE
MIAMI, FLORIDA 33174
TEL. (305) 264-8100 FAX. (305) 262-6978
COMP–ANL\W01–75RC

SERIES–2400ST ALUM SLD. GLASS DOOR (L.M.I.)

R.C. ALUMINUM INDUSTRIES INC.
2805 N.W. 75 TH AVE.
MIAMI, FL. 33122
TEL. (305) 592–1515 FAX. (305) 592–2184

revisions:

no	date	by	description
F	06.03.09		UPDATED FOR 2007 FBC
G	08.05.10		GENERAL REVISION
H	03.16.11		REV PER BNC COMMENTS
I	02.13.12		UPDATED TO 2010 FBC

date: 11–02–01
scale: 1/2" = 1"
dr. by: HAMID
chk. by:

drawing no.
W01–75

sheet 2 of 9

DESIGN LOAD CAPACITY – PSF (HEAD ANCHORS)

PANEL WIDTH NOMINAL INCHES	DOOR HEIGHT INCHES	ANCHORS TYPE A			ANCHORS TYPE B							ANCHORS TYPE C								
		1/2" MAX. SHIM SPACE			1/4" MAX. SHIM SPACE		3/8" MAX. SHIM SPACE		1/2" MAX. SHIM SPACE			1/4" MAX. SHIM SPACE			3/8" MAX. SHIM SPACE			1/2" MAX. SHIM SPACE		
		2 ANCHORS AT FREE STAND. JAMB	3 ANCHORS AT FREE STAND. JAMB	4 ANCHORS AT FREE STAND. JAMB	2 ANCHORS AT FREE STAND. JAMB	3 ANCHORS AT FREE STAND. JAMB	2 ANCHORS AT FREE STAND. JAMB	3 ANCHORS AT FREE STAND. JAMB	2 ANCHORS AT FREE STAND. JAMB	3 ANCHORS AT FREE STAND. JAMB	4 ANCHORS AT FREE STAND. JAMB	2 ANCHORS AT FREE STAND. JAMB	3 ANCHORS AT FREE STAND. JAMB	4 ANCHORS AT FREE STAND. JAMB	3 ANCHORS AT FREE STAND. JAMB	4 ANCHORS AT FREE STAND. JAMB	5 ANCHORS AT FREE STAND. JAMB	4 ANCHORS AT FREE STAND. JAMB	5 ANCHORS AT FREE STAND. JAMB	6 ANCHORS AT FREE STAND. JAMB
		4 ANCHORS AT MTG. STILE ENDS	6 ANCHORS AT MTG. STILE ENDS	8 ANCHORS AT MTG. STILE ENDS	4 ANCHORS AT MTG. STILE ENDS	6 ANCHORS AT MTG. STILE ENDS	4 ANCHORS AT MTG. STILE ENDS	6 ANCHORS AT MTG. STILE ENDS	4 ANCHORS AT MTG. STILE ENDS	6 ANCHORS AT MTG. STILE ENDS	8 ANCHORS AT MTG. STILE ENDS	4 ANCHORS AT MTG. STILE ENDS	6 ANCHORS AT MTG. STILE ENDS	8 ANCHORS AT MTG. STILE ENDS	6 ANCHORS AT MTG. STILE ENDS	8 ANCHORS AT MTG. STILE ENDS	10 ANCHORS AT MTG. STILE ENDS	8 ANCHORS AT MTG. STILE ENDS	10 ANCHORS AT MTG. STILE ENDS	12 ANCHORS AT MTG. STILE ENDS
		EXT. (+) INT. (–)	EXT. (+) INT. (–)	EXT. (+) INT. (–)	EXT. (+) INT. (–)	EXT. (+) INT. (–)	EXT. (+) INT. (–)	EXT. (+) INT. (–)	EXT. (+) INT. (–)	EXT. (+) INT. (–)	EXT. (+) INT. (–)	EXT. (+) INT. (–)	EXT. (+) INT. (–)	EXT. (+) INT. (–)	EXT. (+) INT. (–)	EXT. (+) INT. (–)	EXT. (+) INT. (–)	EXT. (+) INT. (–)	EXT. (+) INT. (–)	EXT. (+) INT. (–)
30	96	124.0	131.0	131.0	131.0	131.0	131.0	131.0	131.0	131.0	131.0	131.0	131.0	131.0	131.0	131.0	131.0	131.0	131.0	131.0
36		103.3	131.0	131.0	131.0	131.0	131.0	131.0	126.4	131.0	131.0	131.0	131.0	131.0	127.3	131.0	131.0	131.0	131.0	131.0
42		88.6	131.0	131.0	131.0	131.0	131.0	131.0	108.4	131.0	131.0	112.9	131.0	131.0	109.1	131.0	131.0	119.0	131.0	131.0
48		77.1	115.6	131.0	120.8	131.0	116.0	131.0	94.8	131.0	131.0	98.8	131.0	131.0	95.5	127.4	131.0	104.1	130.2	131.0
54		68.9	103.3	131.0	107.3	131.0	103.1	131.0	84.3	126.4	131.0	87.8	131.0	131.0	84.9	113.2	131.0	92.6	115.7	131.0
60		62.0	93.0	124.0	96.6	131.0	92.8	131.0	75.9	113.8	131.0	79.0	118.5	131.0	76.4	101.9	127.4	83.3	104.2	125.0
30	102	116.7	131.0	131.0	131.0	131.0	131.0	131.0	131.0	131.0	131.0	131.0	131.0	131.0	131.0	131.0	131.0	131.0	131.0	131.0
36		97.3	131.0	131.0	131.0	131.0	131.0	131.0	119.0	131.0	131.0	123.9	131.0	131.0	119.8	131.0	131.0	130.7	131.0	131.0
42		83.4	125.0	131.0	129.9	131.0	124.8	131.0	102.0	131.0	131.0	106.2	131.0	131.0	102.7	131.0	131.0	112.0	131.0	131.0
48		72.6	108.8	131.0	113.6	131.0	109.2	131.0	89.2	131.0	131.0	92.9	131.0	131.0	89.9	119.9	131.0	98.0	122.5	131.0
54		64.8	97.3	129.7	101.0	131.0	97.0	131.0	79.3	119.0	131.0	82.6	123.9	131.0	79.9	106.6	131.0	87.1	108.9	130.7
30	108	110.2	131.0	131.0	131.0	131.0	131.0	131.0	131.0	131.0	131.0	131.0	131.0	131.0	131.0	131.0	131.0	131.0	131.0	131.0
36		91.9	131.0	131.0	131.0	131.0	131.0	131.0	112.4	131.0	131.0	117.0	131.0	131.0	113.2	131.0	131.0	123.4	131.0	131.0
42		78.7	118.1	131.0	122.7	131.0	117.8	131.0	96.3	131.0	131.0	100.3	131.0	131.0	97.0	129.4	131.0	105.8	131.0	131.0
48		68.5	102.8	131.0	107.3	131.0	103.1	131.0	84.3	126.4	131.0	87.8	131.0	131.0	84.9	113.2	131.0	92.6	115.7	131.0
30	114	104.4	131.0	131.0	131.0	131.0	131.0	131.0	127.7	131.0	131.0	131.0	131.0	131.0	128.7	131.0	131.0	131.0	131.0	131.0
36		87.0	130.5	131.0	131.0	131.0	131.0	131.0	106.5	131.0	131.0	110.9	131.0	131.0	107.2	131.0	131.0	116.9	131.0	131.0
42		74.6	111.9	131.0	116.2	131.0	111.6	131.0	91.2	131.0	131.0	95.0	131.0	131.0	91.9	122.6	131.0	100.2	125.3	131.0
48		64.9	97.4	129.9	101.7	131.0	97.7	131.0	79.8	119.8	131.0	83.2	124.7	131.0	80.4	107.3	131.0	87.7	109.6	131.0
30	119–1/2	99.6	131.0	131.0	131.0	131.0	131.0	131.0	121.9	131.0	131.0	126.9	131.0	131.0	122.8	131.0	131.0	131.0	131.0	131.0
36		83.0	124.5	131.0	129.3	131.0	124.3	131.0	101.6	131.0	131.0	105.8	131.0	131.0	102.3	131.0	131.0	111.5	131.0	131.0
42		71.2	106.7	131.0	110.9	131.0	106.5	131.0	87.0	130.6	131.0	90.7	131.0	131.0	87.7	116.9	131.0	95.6	119.5	131.0
48		61.9	92.9	123.9	97.0	131.0	93.2	131.0	76.2	114.3	131.0	79.3	119.0	131.0	76.7	102.3	127.9	83.6	104.6	125.5
30	120	99.2	131.0	131.0	131.0	131.0	131.0	131.0	121.4	131.0	131.0	126.4	131.0	131.0	122.2	131.0	131.0	131.0	131.0	131.0
36		82.7	124.0	131.0	128.8	131.0	123.7	131.0	101.1	131.0	131.0	105.3	131.0	131.0	101.9	131.0	131.0	111.1	131.0	131.0
42		70.9	106.3	131.0	110.4	131.0	106.1	131.0	86.7	130.1	131.0	90.3	131.0	131.0	87.3	116.5	131.0	95.2	119.0	131.0
48		61.7	92.5	123.4	96.6	131.0	92.8	131.0	75.9	113.8	131.0	79.0	118.5	131.0	76.4	101.9	127.4	83.3	104.2	125.0
30	126	94.5	131.0	131.0	131.0	131.0	131.0	131.0	115.6	131.0	131.0	120.4	131.0	131.0	116.4	131.0	131.0	126.9	131.0	131.0
36		78.7	118.1	131.0	122.7	131.0	117.8	131.0	96.3	131.0	131.0	100.3	131.0	131.0	97.0	129.4	131.0	105.8	131.0	131.0
42		67.5	101.2	131.0	105.1	131.0	101.0	131.0	82.6	123.9	131.0	86.0	129.0	131.0	83.2	110.9	131.0	90.7	113.4	131.0
48		58.7	88.1	117.5	92.0	131.0	88.4	131.0	72.2	108.4	131.0	75.2	112.9	131.0	72.8	97.0	121.3	79.3	99.2	119.0
30	132	90.2	131.0	131.0	131.0	131.0	131.0	131.0	110.3	131.0	131.0	114.9	131.0	131.0	111.1	131.0	131.0	121.2	131.0	131.0
36		75.2	112.7	131.0	117.1	131.0	112.5	131.0	91.9	131.0	131.0	95.8	131.0	131.0	92.6	123.5	131.0	101.0	126.2	131.0
42		64.4	96.6	128.8	100.4	131.0	96.4	131.0	78.8	118.2	131.0	82.1	123.1	131.0	79.4	105.9	131.0	86.5	108.2	129.8
48		56.1	84.1	112.1	87.8	131.0	84.4	126.6	69.0	103.5	131.0	71.8	107.7	131.0	69.5	92.6	115.8	75.7	94.7	113.6

NOTE:
SEE SHEET 2 FOR DESIGN LOAD CAPACITY OF DESIRED GLASS SIZE. USING CHART ON THIS SHEET SELECT ANCHOR OPTION WITH DESIGN RATING MORE THAN DESIGN LOADS REQUIRED.
LOWER DESIGN PRESSURES FROM GLASS OR HEAD OR SILL ANCHOR CHARTS WILL APPLY TO ENTIRE SYSTEM.

PRODUCT REVISED
in complying with the Florida
Building Code
Acceptance No 12-0223.19
Expiration Date 2/7/17
By Ishaq I. Chande
Manager Date/Product Control

Engr: JAVAD AHMAD
CIVIL
FLA. PE # 70592
C.A.N. 3538

FEB 15 2012

AL-FAROOQ CORPORATION
ENGINEERS & PRODUCT DEVELOPMENT
1235 S.W. 87 AVE
MIAMI, FLORIDA 33174
TEL. (305) 264-8100 FAX. (305) 262-6978
COMP-ANL\W01-75RC

SERIES-2400ST ALUM SLD. GLASS DOOR (L.M.I.)

R.C. ALUMINUM INDUSTRIES INC.
2805 N.W. 75 TH AVE.
MIAMI, FL. 33122
TEL. (305) 592-1515 FAX. (305) 592-2184

revisions:

no	date	by	description
F	06.03.09		UPDATED FOR 2007 FBC
G	08.05.10		GENERAL REVISION
H	03.16.11		REV PER BNC COMMENTS
I	02.13.12		NO CHANGE THIS SHEET

date: 11-02-01
scale: 1/2" = 1"
dr. by: HAMID
chk. by:

drawing no.
W01-75

DESIGN LOAD CAPACITY – PSF SILL ANCHORS				
		2 ANCHORS AT FREE STAND. JAMB	3 ANCHORS AT FREE STAND. JAMB	4 ANCHORS AT FREE STAND. JAMB
		4 ANCHORS AT MTG. STILE ENDS	6 ANCHORS AT MTG. STILE ENDS	8 ANCHORS AT MTG. STILE ENDS
PANEL WIDTH NOMINAL INCHES	DOOR HEIGHT INCHES	EXT. (+) INT. (–)	EXT. (+) INT. (–)	EXT. (+) INT. (–)
30	96	131.0	131.0	131.0
36		130.3	131.0	131.0
42		111.7	131.0	131.0
48		97.8	131.0	131.0
54		86.9	130.3	131.0
60		78.2	117.3	131.0
30	102	131.0	131.0	131.0
36		122.7	131.0	131.0
42		105.1	131.0	131.0
48		92.0	131.0	131.0
54		81.8	122.7	131.0
30	108	131.0	131.0	131.0
36		115.9	131.0	131.0
42		99.3	131.0	131.0
48		86.9	130.3	131.0
30	114	131.0	131.0	131.0
36		109.8	131.0	131.0
42		94.1	131.0	131.0
48		82.3	123.5	131.0
30	119–1/2	125.6	131.0	131.0
36		104.7	131.0	131.0
42		89.7	131.0	131.0
48		78.5	117.8	131.0
30	120	125.1	131.0	131.0
36		104.3	131.0	131.0
42		89.4	131.0	131.0
48		78.2	117.3	131.0
30	126	119.2	131.0	131.0
36		99.3	131.0	131.0
42		85.1	127.7	131.0
48		74.5	111.7	131.0
30	132	113.7	131.0	131.0
36		94.8	131.0	131.0
42		81.2	121.9	131.0
48		71.1	106.6	131.0

PRODUCT REVISED
to complying with the Florida
Building Code
Acceptance No 12-0223.19
Expiration Date 2/7/17
By Ishaq I. Chanda
Miami Dade Product Control

NOTE:
SEE SHEET 2 FOR DESIGN LOAD CAPACITY OF DESIRED GLASS SIZE.
USING CHART ON THIS SHEET SELECT ANCHOR OPTION WITH DESIGN RATING MORE THAN DESIGN LOADS REQUIRED.
LOWER DESIGN PRESSURES FROM GLASS OR HEAD OR SILL ANCHOR CHARTS WILL APPLY TO ENTIRE SYSTEM.

Engr: JAVAD AHMAD
CIVIL
FLA. PE # 70592
C.A.N. 3538
FEB 15 2012

AL-FAROOQ CORPORATION
ENGINEERS & PRODUCT DEVELOPMENT
1235 S.W. 87 AVE
MIAMI, FLORIDA 33174
TEL. (305) 264-8100 FAX. (305) 262-6978

COMP-ANL\W01-75RC

SERIES-2400ST ALUM SLD. GLASS DOOR (L.M.I.)

R.C. ALUMINUM INDUSTRIES INC.
2805 N.W. 75 TH AVE.
MIAMI, FL. 33122
TEL. (305) 592-1515 FAX. (305) 592-2184

revisions:

no	date	by	description
H	03.16.11		REV PER BNC COMMENTS
I	02.13.12		NO CHANGE THIS SHEET

date: 11-02-01
scale: 1/2" = 1"
dr. by: HAMID
chk. by:

drawing no.
W01-75

CONFIGURATIONS SHOWN FOR ILLUSTRATION PURPOSES ONLY
SEE SHEETS 4 & 5 FOR FRAME ANCHOR INSTALLATIONS.

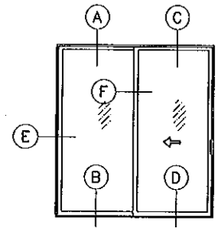

OX (SHOWN)
XO

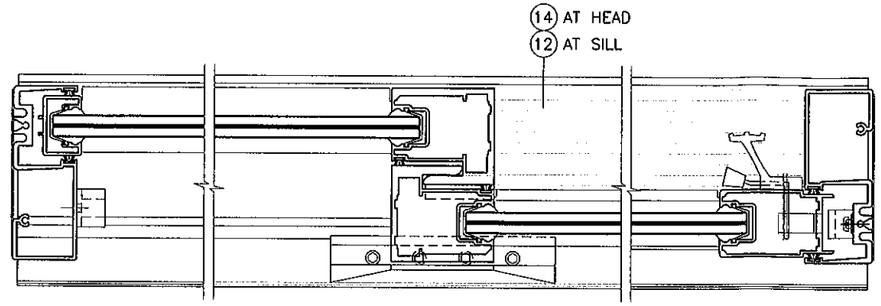

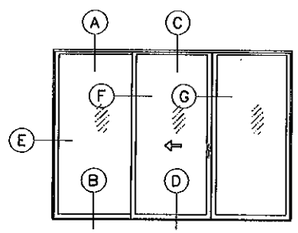

OXO

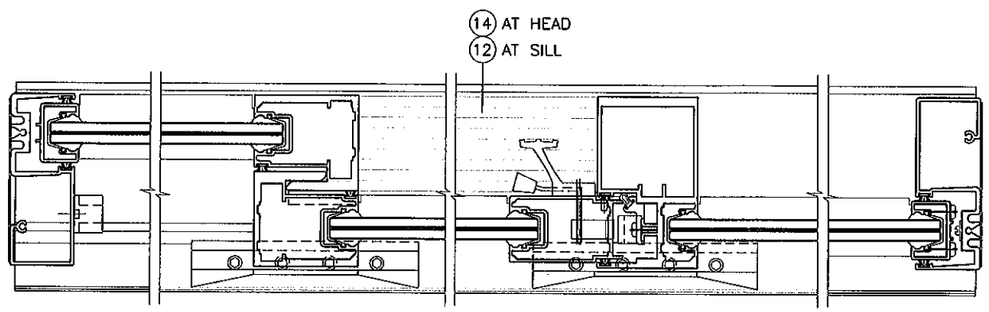

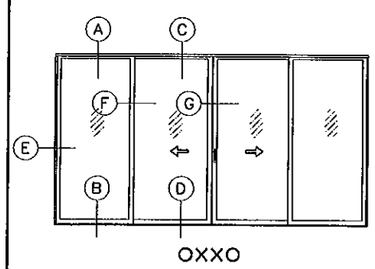

OXXO

APPROVED CONFIGURATIONS

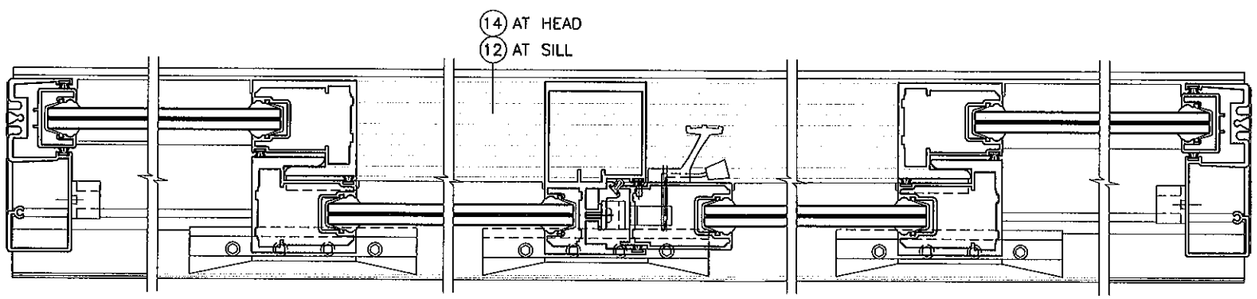

PRODUCT REVISED
as complying with the Florida Building Code
Acceptance No 12-0223.19
Expiration Date 2/7/17
By [illegible]
Miami Dade Product Control

Engr: JAVAD AHMAD
CIVIL
FLA. PE # 70592
C.A.N. 3538

FEB 15 2012

AL-FAROOQ CORPORATION
ENGINEERS & PRODUCT DEVELOPMENT
1235 S.W. 87 AVE
MIAMI, FLORIDA 33174
TEL. (305) 264-8100 FAX. (305) 262-6978
COMP-ANL\W01-75RC

SERIES-2400ST ALUM SLD. GLASS DOOR (L.M.I.)

R.C. ALUMINUM INDUSTRIES INC.
2805 N.W. 75 TH AVE.
MIAMI, FL. 33122
TEL. (305) 592-1515 FAX. (305) 592-2184

revisions:

no	date	by	description
G	08.05.10		GENERAL REVISION
H	03.16.11		REV PER BNC COMMENTS
I	02.13.12		NO CHANGE THIS SHEET

date: 11-02-01
scale: 1/2" = 1"
dr. by: HAMID
chk. by:

drawing no.
W01-75

sheet 3.2 of 9

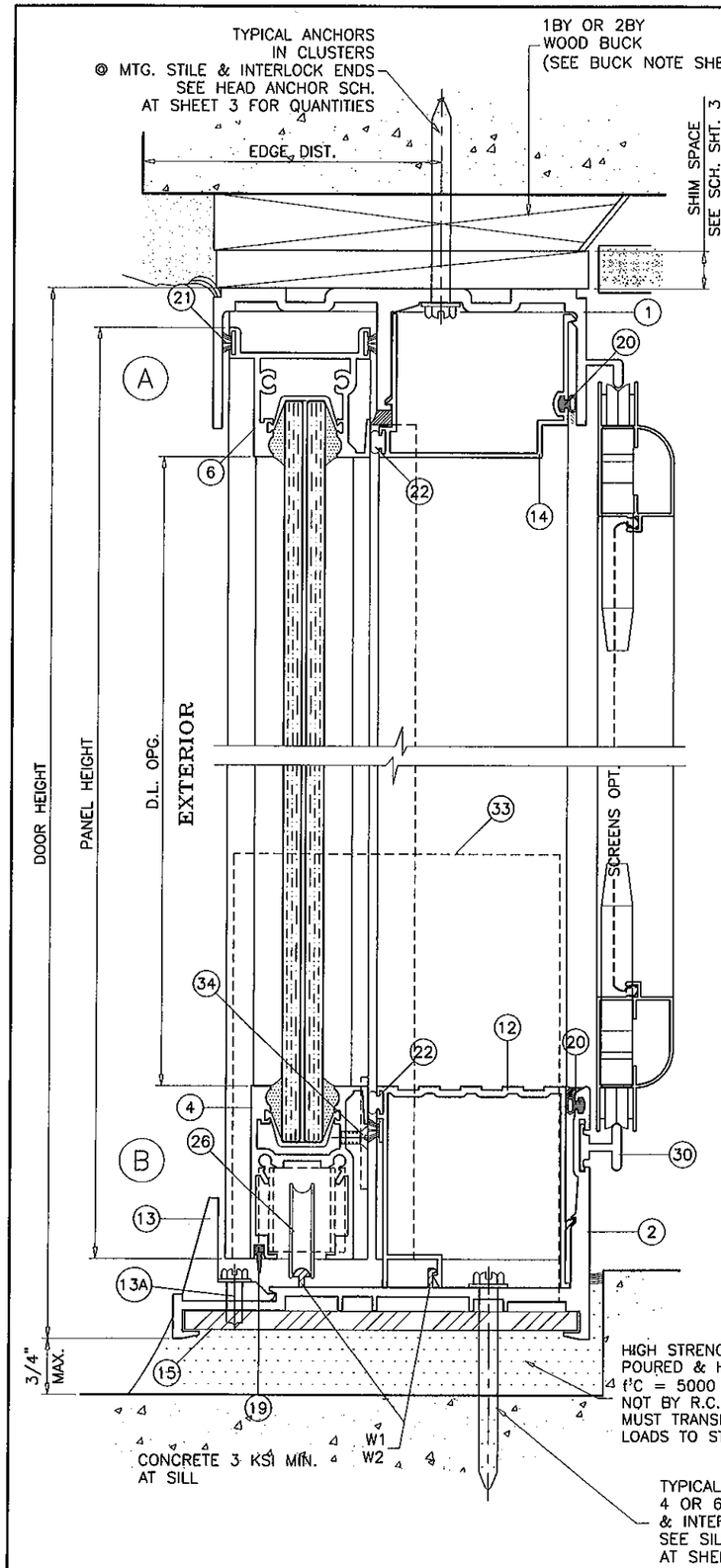

1BY OR 2BY WOOD BUCKS AND METAL STRUCTURES NOT BY RC ALUM MUST SUPPORT LOADS IMPOSED BY GLAZING SYSTEM AND TRANSFER THEM TO THE BUILDING STRUCTURE.

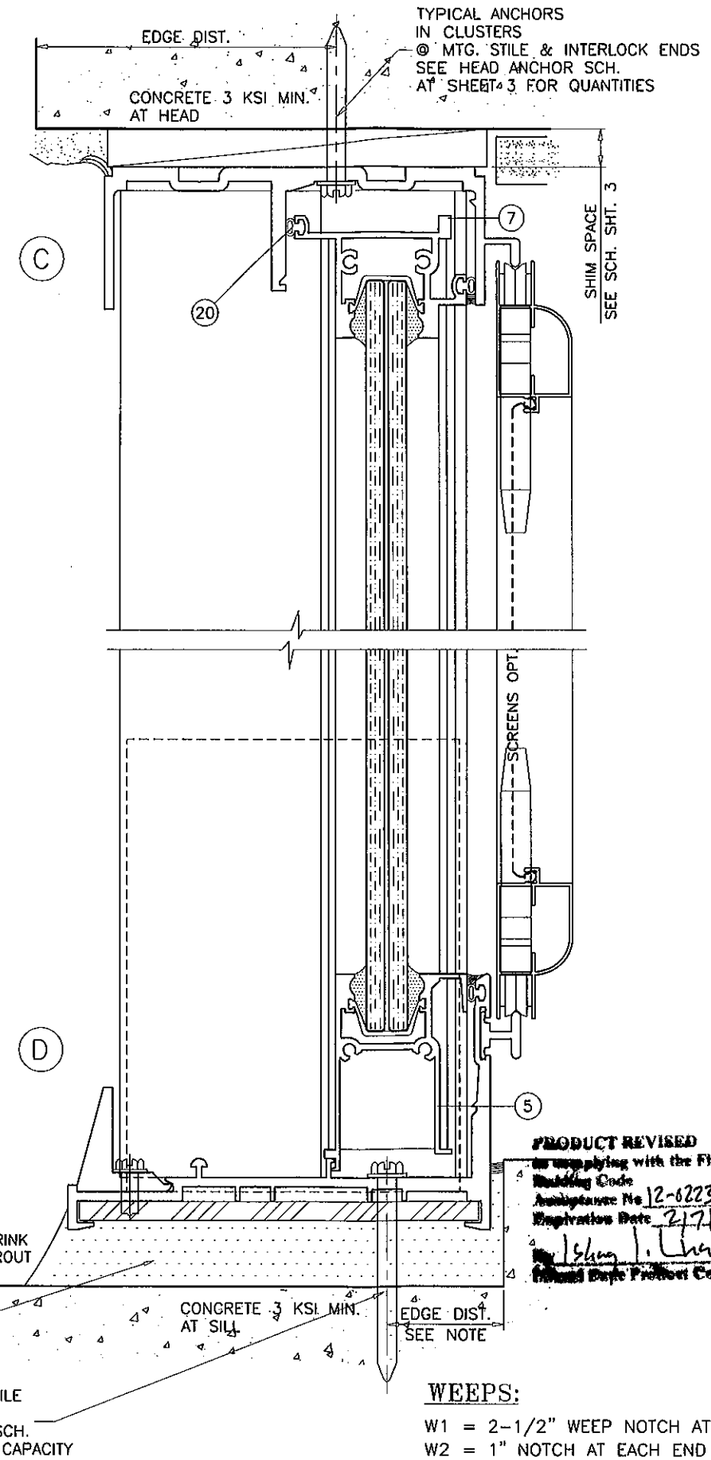

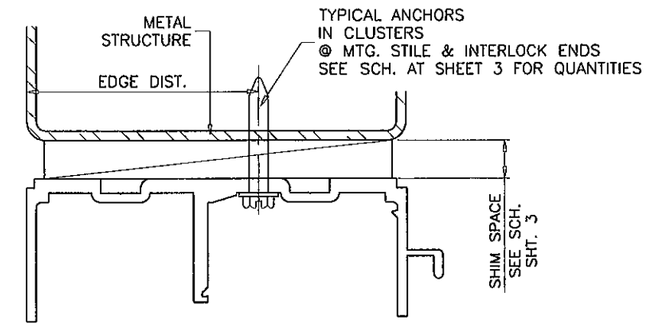

TYPICAL ANCHORS: SEE ELEV. FOR SPACING

AT HEAD

TYPE 'A'

1/4" X 2-3/4" HILTI KWIK-CON II (Fu=163 KSI, Fy=157 KSI)
THRU 1BY OR 2BY WOOD BUCKS INTO CONCRETE
1-3/8" MIN. CONCRETE EMBEDMENT

TYPE 'B'

1/4" X 2-3/4" HILTI KWIK-CON II (Fu=163 KSI, Fy=157 KSI)
DIRECTLY INTO CONCRETE, 1-3/4" MIN. EMBEDMENT

TYPE 'C'

1/4" TEKS OR SELF DRILLING SCREWS (Fu=92 KSI, Fy=120 KSI)
INTO METAL STRUCTURES OR APPROVED MULLIONS
STEEL : 1/8" THK. MIN. (Fy = 36 KSI MIN.)
ALUMINUM : 1/8" THK. MIN. (6063-T5 MIN.)
(STEEL IN CONTACT WITH ALUMINUM TO BE PLATED OR PAINTED)

AT SILL

1/4" DIA HILTI KWIK-CON II (Fu=163 KSI, Fy=157 KSI)
DIRECTLY INTO CONCRETE, 1-3/8" MIN. EMBEDMENT

AT JAMBS

1/4" DIA. HILTI KWIK-CON II (Fu=163 KSI, Fy=157 KSI)
THRU 1BY BUCKS, 1-1/4" MIN. CONC. OR MASONRY EMBED.
INTO 2BY BUCKS, 1-3/8" MIN. WOOD EMBEDMENT
DIRECTLY INTO MASONRY OR CONCRETE
1-1/4" MIN. MASONRY OR CONCRETE EMBEDMENT

1/4" TEKS OR SELF DRILLING SCREWS (Fu=92 KSI, Fy=120 KSI)
INTO METAL STRUCTURES OR APPROVED MULLIONS
STEEL : 1/8" THK. MIN. (Fy = 36 KSI MIN.)
ALUMINUM : 1/8" THK. MIN. (6063-T5 MIN.)
(STEEL IN CONTACT WITH ALUMINUM TO BE PLATED OR PAINTED)

ANCHOR EDGE DISTANCES

INTO CONCRETE = 2-1/2" MIN.
INTO WOOD STRUCTURE = 1" MIN.
INTO METAL STRUCTURE = 3/4" MIN.

CONCRETE AT HEAD, SILL OR JAMBS f'c = 3000 PSI MIN.
C-90 HOLLOW/FILLED BLOCK AT JAMBS f'm = 1500 PSI MIN.

PRODUCT REVISED
to comply with the Florida Building Code
Acceptance No 12-0223.19
Expiration Date 2-7-13
By Ishq I. Chaudhry
Product Data Product Control

Engr: JAVAD AHMAD
CIVIL
FLA. PE # 70592
C.A.N. 3538
FEB 15 2012

WEEPS:

W1 = 2-1/2" WEEP NOTCH AT SILL CENTER
W2 = 1" NOTCH AT EACH END

AL-FAROOQ CORPORATION
ENGINEERS & PRODUCT DEVELOPMENT
1235 S.W. 87 AVE
MIAMI, FLORIDA 33174
TEL. (305) 264-8100 FAX. (305) 262-6978
COMP-ANL\W01-75RC

SERIES-2400ST ALUM SLD. GLASS DOOR (L.M.I.)

R.C. ALUMINUM INDUSTRIES INC.
2805 N.W. 75 TH AVE.
MIAMI, FL. 33122
TEL. (305) 592-1515 FAX. (305) 592-2184

revisions:

no	date	by	description
F	06.03.09		UPDATED FOR 2007 FBC
G	08.05.10		GENERAL REVISION
H	03.16.11		REV PER BNC COMMENTS
I	02.13.12		NO CHANGE THIS SHEET

date: 11-02-01
scale: 1/2" = 1"
dr. by: HAMID
chk. by:

drawing no.
W01-75

1BY OR 2BY WOOD BUCKS AND METAL STRUCTURES NOT BY RC ALUM MUST SUPPORT LOADS IMPOSED BY GLAZING SYSTEM AND TRANSFER THEM TO THE BUILDING STRUCTURE.

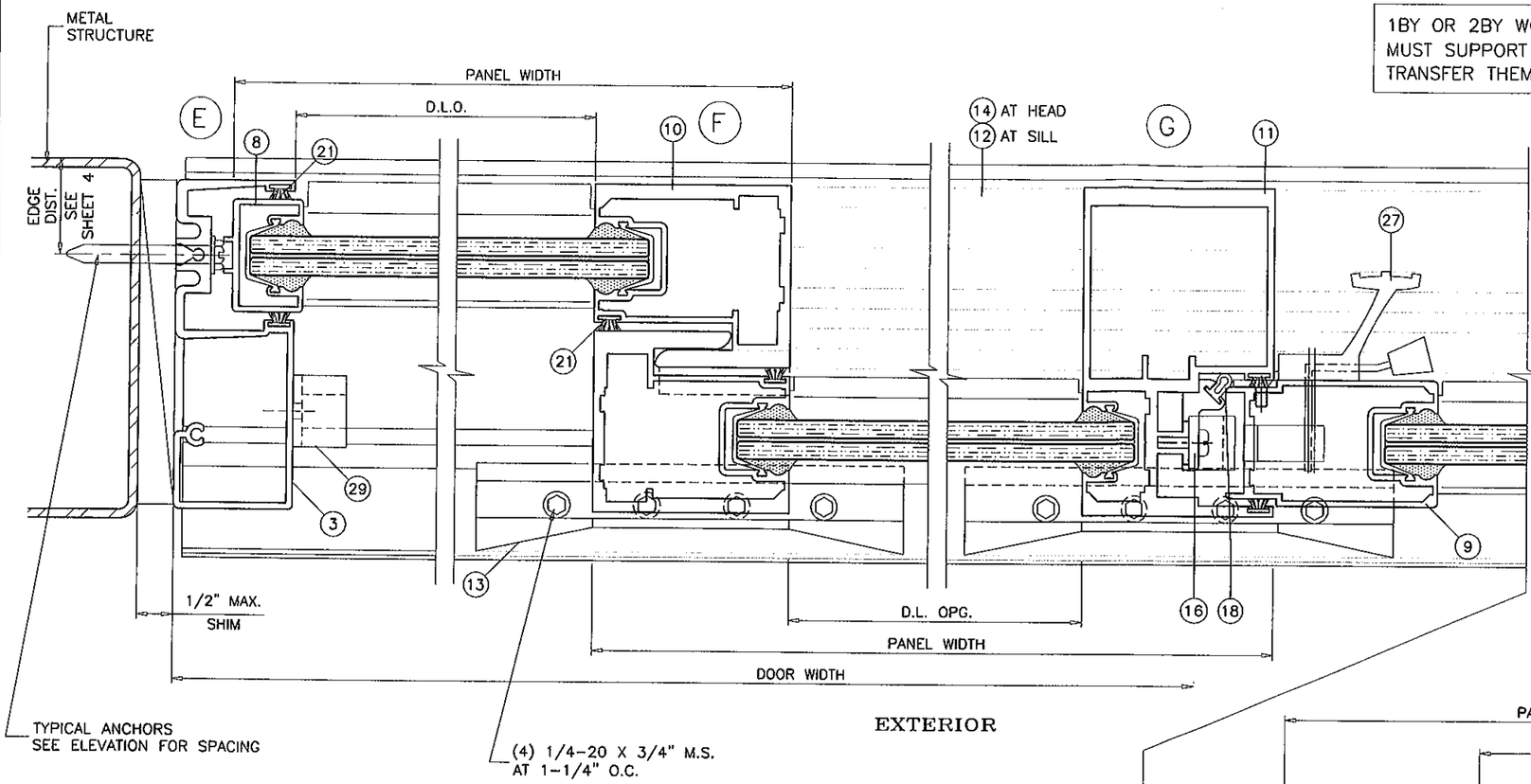

EXTERIOR

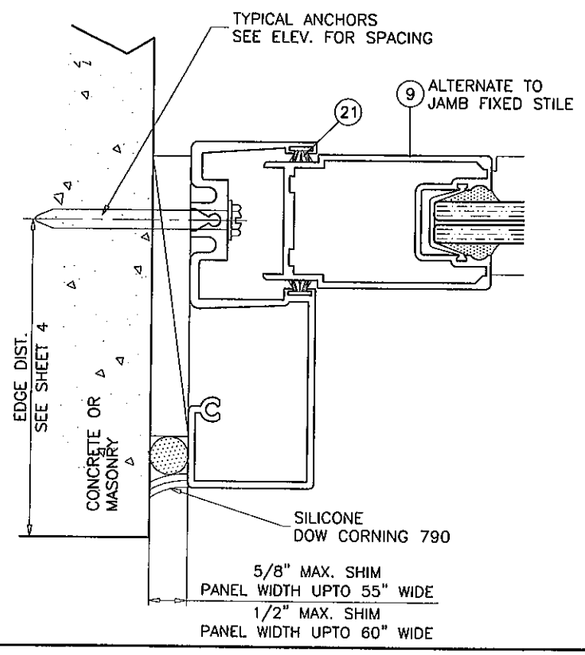

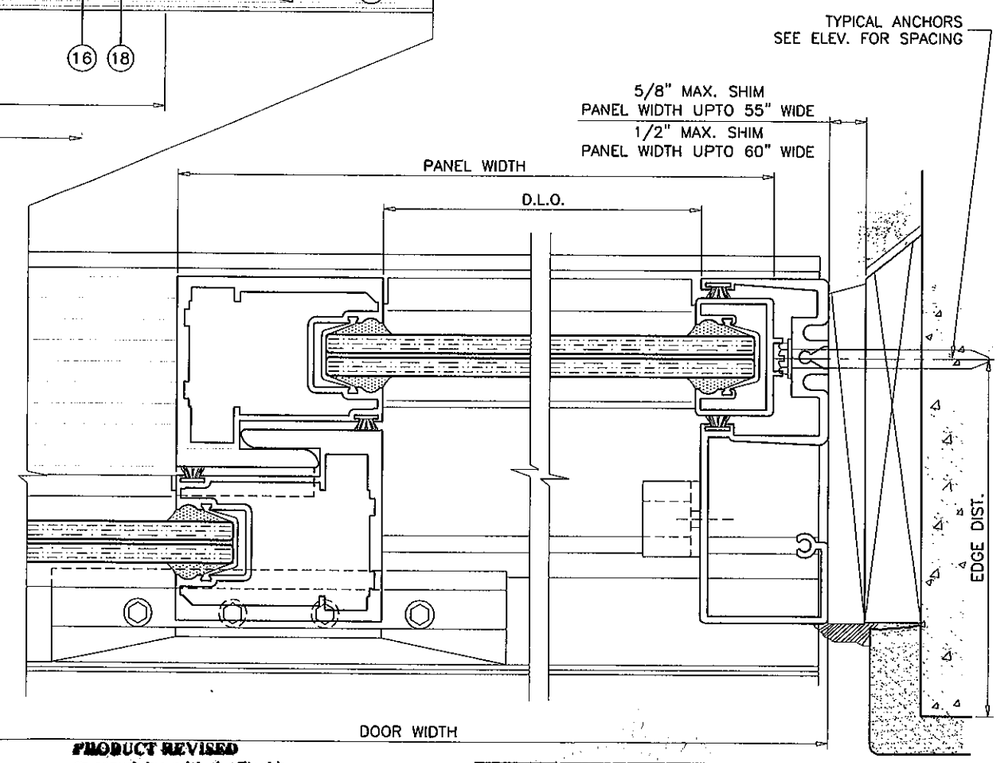

PRODUCT REVISED
in complying with the Florida
Building Code
Acceptance No 12-0223.19
Expiration Date 2/27/17
By Shang L. Chang
Miami Dade Product Control

Engr: JAVAD AHMAD
CIVIL
FLA. PE # 70592
C.A.N. 3588

FEB 15 2012

AL-FAROOQ CORPORATION
ENGINEERS & PRODUCT DEVELOPMENT
1235 S.W. 87 AVE
MIAMI, FLORIDA 33174
TEL. (305) 264-8100 FAX. (305) 262-6978

COMP-ANL\W01-75RC

SERIES-2400ST ALUM SLD. GLASS DOOR (L.M.I.)

R.C. ALUMINUM INDUSTRIES INC.
2805 N.W. 75 TH AVE.
MIAMI, FL. 33122
TEL. (305) 592-2184 FAX. (305) 592-1515

revisions:

no	date	by	description
F	06.03.09		UPDATED FOR 2007 FBC
G	08.05.10		GENERAL REVISION
H	03.16.11		REV PER BNC COMMENTS
I	02.13.12		NO CHANGE THIS SHEET

date: 11-02-01
scale: 1/2" = 1"
dr. by: HAMID
chk. by:

drawing no.
W01-75

sheet 5 of 9

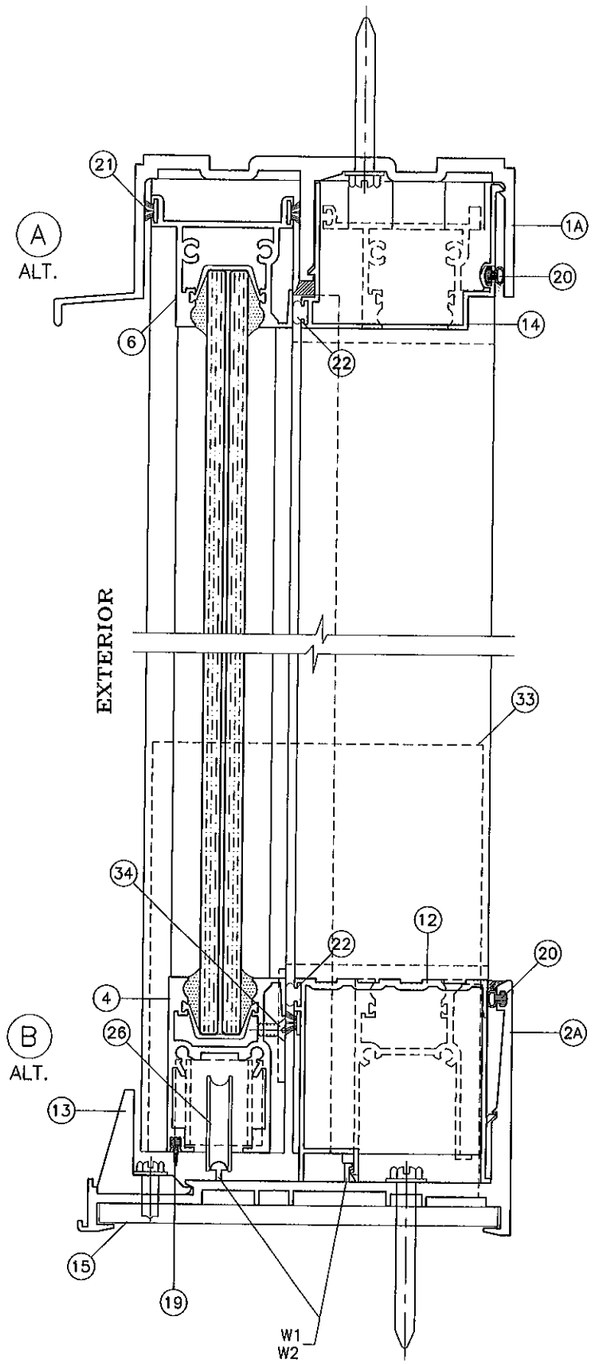

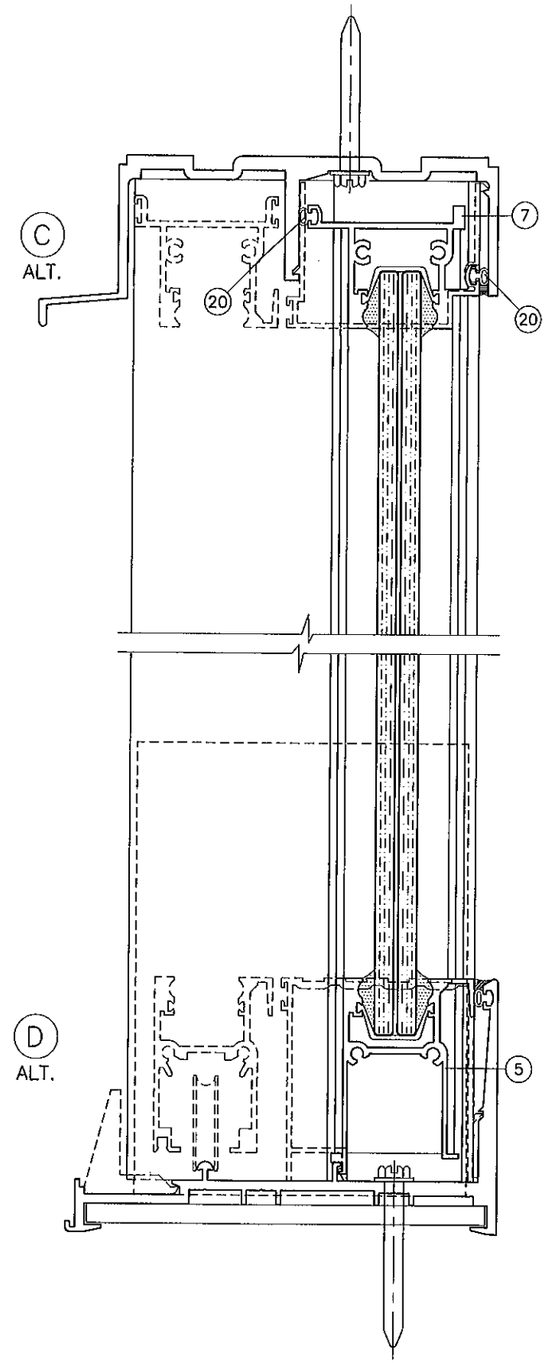

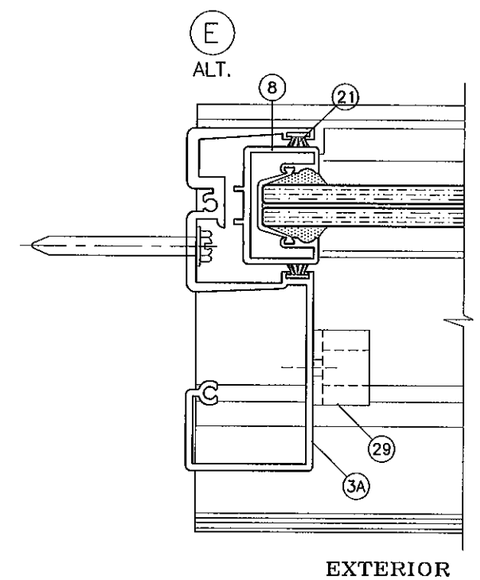

PRODUCT REVISED
in complying with the Florida
Building Code
Acceptance No. 12-0223.19
Expiration Date 2/7/17
By Ishaq I. Chanda
Miami Dade/Product Control

Engr: JAVAD AHMAD
CIVIL
FLA. PE # 70592
C.A.N. 3538
FEB 15 2012

ILLUSTRATED ALTERNATE DOOR FRAMES

THIS SHEET SHOWS ALTERNATE DOOR FRAMES WITH OUTSIDE SCREEN OPTION. HEAD/SILL/JAMB INSTALLATION FOR THESE FRAMES IS IDENTICAL TO STANDARD FRAMES INSTALLATION AS SHOWN ON SHEETS 4 AND 5.

AL-FAROOQ CORPORATION
ENGINEERS & PRODUCT DEVELOPMENT
1235 S.W. 87 AVE
MIAMI, FLORIDA 33174
TEL. (305) 264-8100 FAX. (305) 262-6978

COMP-ANL\W01-75RC

SERIES-2400ST ALUM SLD. GLASS DOOR (L.M.I.)

R.C. ALUMINUM INDUSTRIES INC.
2805 N.W. 75 TH AVE.
MIAMI, FL. 33122
TEL. (305) 592-1515 FAX. (305) 592-2184

revisions:

no	date	by	description
F	06.03.09		UPDATED FOR 2007 FBC
G	08.05.10		GENERAL REVISION
H	03.16.11		REV PER BNC COMMENTS
I	02.13.12		NO CHANGE THIS SHEET

date: 11-02-01
scale: 1/2" = 1"
dr. by: HAMID
chk. by:

drawing no.
W01-75

sheet 6 of 9

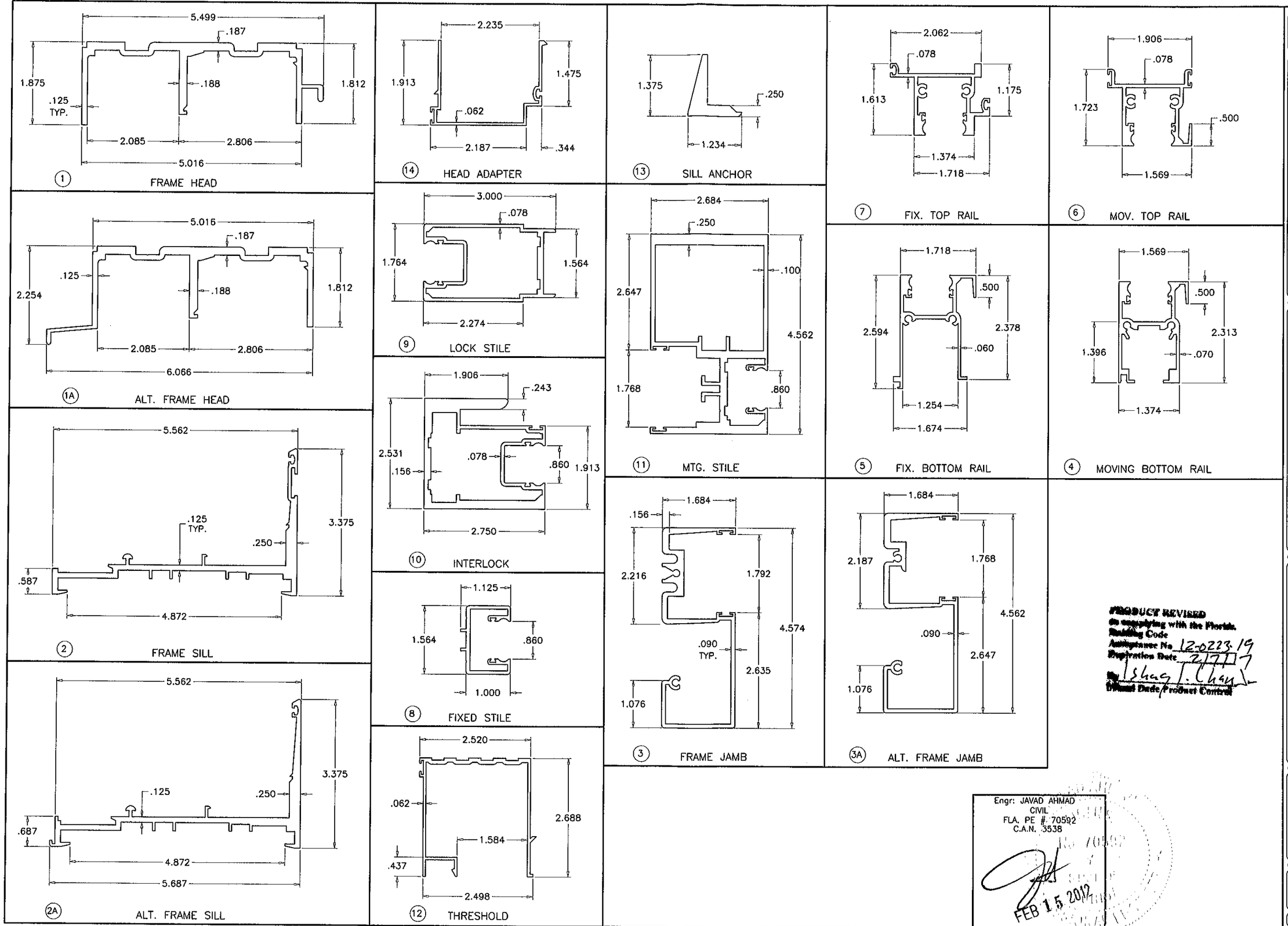

PRODUCT REVISED
as complying with the Florida Building Code
Acceptance No. 12-0223.19
Expiration Date 2/7/17
By Ishag I. Chan
Ishag Date/Product Control

Engr: JAVAD AHMAD
CIVIL
FLA. PE # 70592
C.A.N. 3538

FEB 15 2012

AL-FAROOQ CORPORATION
ENGINEERS & PRODUCT DEVELOPMENT
1235 S.W. 87 AVE
MIAMI, FLORIDA 33174
TEL (305) 264-8100 FAX. (305) 262-6978
COMP-ANL\W01-75RC

SERIES-2400ST ALUM SLD. GLASS DOOR (L.M.I.)

R.C. ALUMINUM INDUSTRIES INC.
2805 N.W. 75 TH AVE.
MIAMI, FL. 33122
TEL. (305) 592-1515 FAX. (305) 592-2184

revisions:

no	date	by	description
F	06.03.09		UPDATED FOR 2007 FBC
G	08.05.10		GENERAL REVISION
H	03.16.11		REV PER BNC COMMENTS
I	02.13.12		NO CHANGE THIS SHEET

date: 11-02-01
scale: 1/2" = 1"
dr. by: HAMID
chk. by:

drawing no.
W01-75

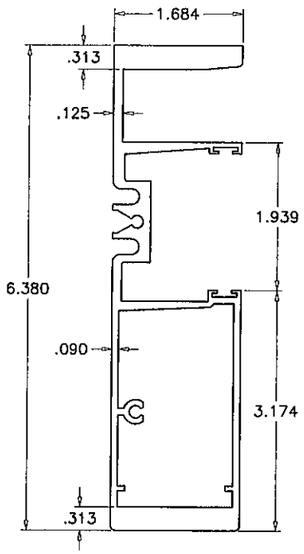

Ix IN^4	Sx IN^3
13.025	4.031

(35) FREE STANDING FRAME JAMB FIXED SIDE

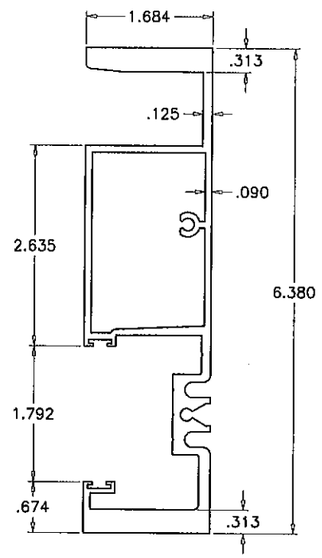

Ix IN^4	Sx IN^3
13.336	4.051

(36) FREE STANDING FRAME JAMB OPERABLE SIDE

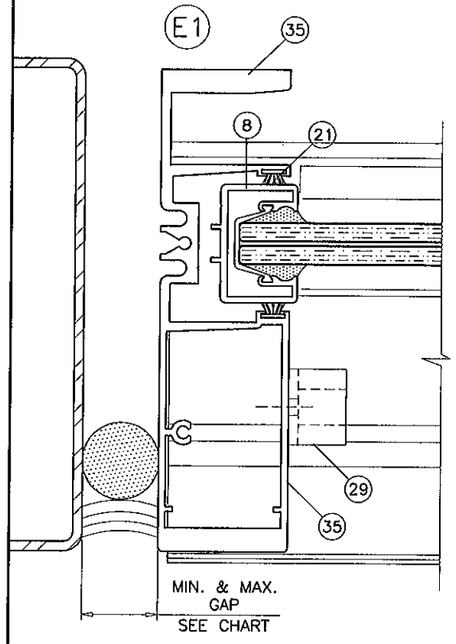

FREE STANDING JAMB FIXED SIDE

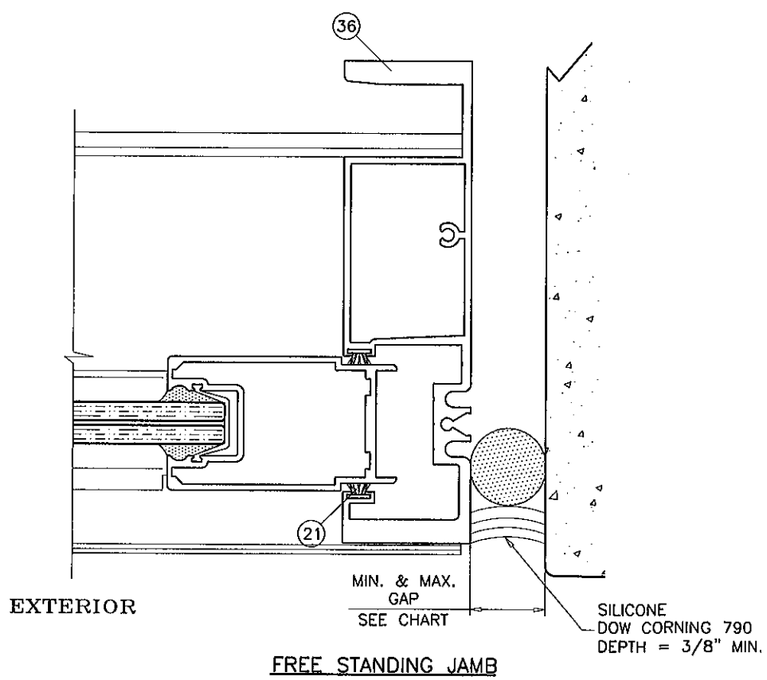

FREE STANDING JAMB OPERABLE SIDE

MAX. FRAME HEIGHT	GAP	
	MIN.	MAX.
84"	7/16"	1"
108"	1/2"	1"
120"	5/8"	1"

PRODUCT REVISED
as complying with the Florida
Building Code
Acceptance No. 12-0223.19
Expiration Date 2/7/17
By Ishaq I. Chaus
Miami Dade Product Control

Engr: JAVAD AHMAD
CIVIL
FLA. PE # 70592
C.A.N. 3538
FEB 15 2012

AL-FAROOQ CORPORATION
ENGINEERS & PRODUCT DEVELOPMENT
1235 S.W. 87 AVE
MIAMI, FLORIDA 33174
TEL. (305) 264-8100 FAX. (305) 262-6978

COMP-ANL\W01-75RC

SERIES-2400ST ALUM SLD. GLASS DOOR (L.M.I.)

R.C. ALUMINUM INDUSTRIES INC.
2805 N.W. 75 TH AVE.
MIAMI, FL. 33122
TEL. (305) 592-1515 FAX. (305) 592-2184

revisions:

no	date	by	description
G	08.05.10		GENERAL REVISION
H	03.16.11		REV PER BNC COMMENTS
I	02.13.12		NO CHANGE THIS SHEET

date: 11-02-01
scale: 1/2" = 1"
dr. by: HAMID
chk. by:

drawing no.
W01-75

sheet 8 of 9

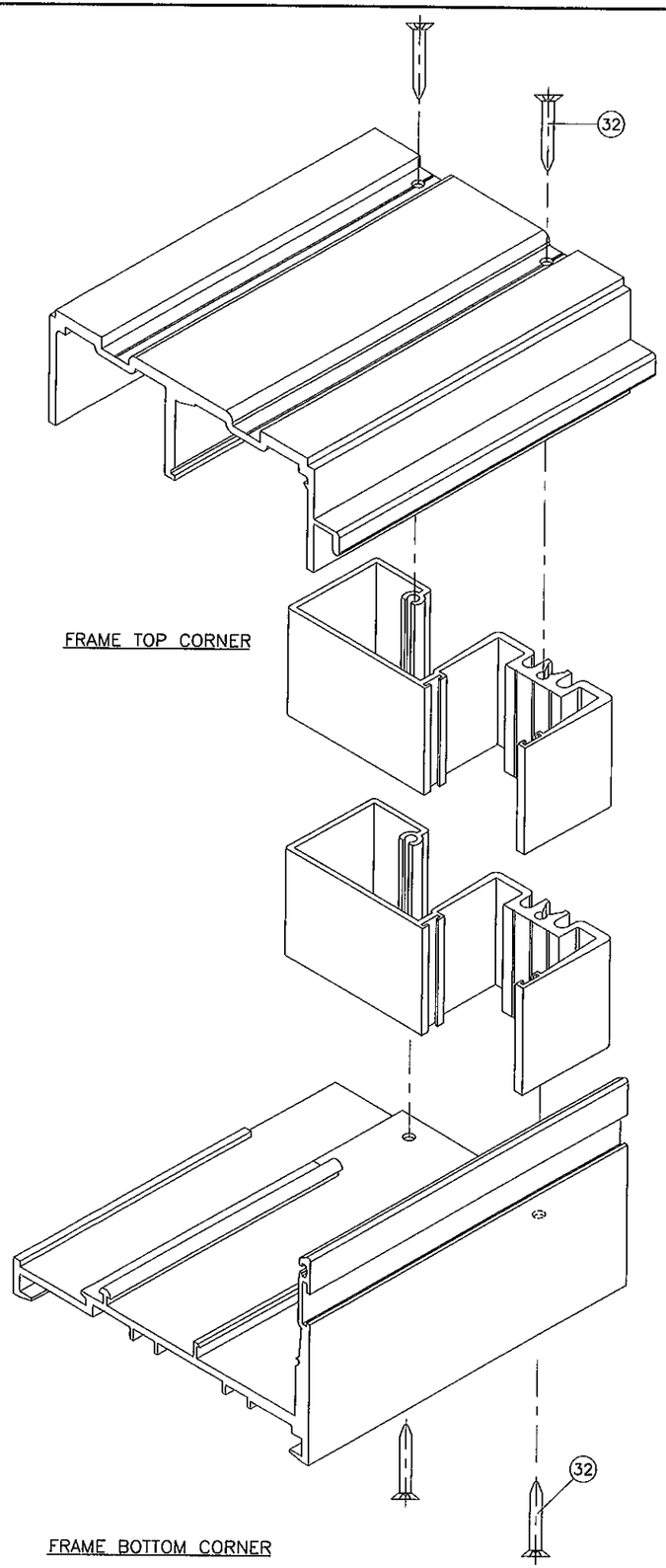

FRAME TOP CORNER

FRAME BOTTOM CORNER

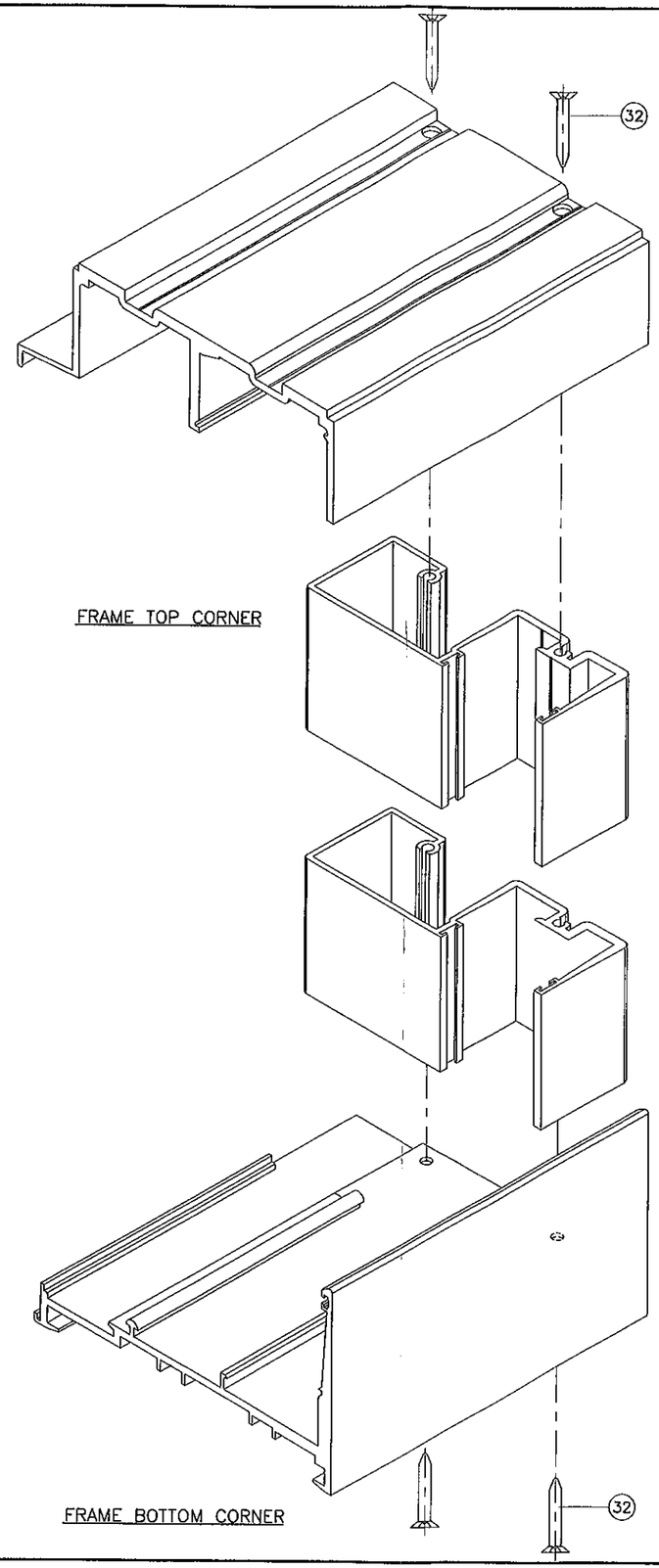

FRAME TOP CORNER

FRAME BOTTOM CORNER

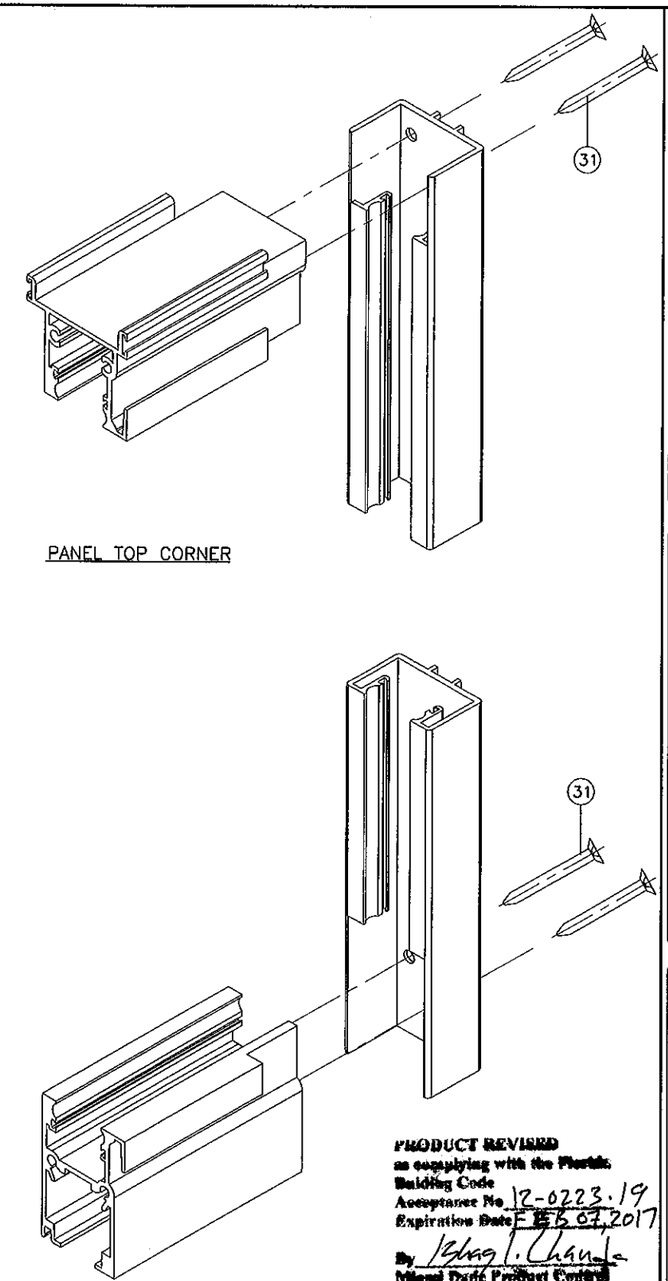

PANEL TOP CORNER

PANEL BOTTOM CORNER

PRODUCT REVIEWED
as complying with the Florida
Building Code
Acceptance No 12-0223.19
Expiration Date FEB 07, 2017
By Ishaq I. Chanda
Miami Dade Product Control

Engr: JAVAD AHMAD
CIVIL
FLA. PE # 70592
C.A.N. 3538
FEB 15 2012

AL-FAROOQ CORPORATION
ENGINEERS & PRODUCT DEVELOPMENT
1235 S.W. 87 AVE
MIAMI, FLORIDA 33174
TEL. (305) 264-8100 FAX. (305) 262-6978

COMP-ANL\W01-75RC

SERIES-2400ST ALUM SLD. GLASS DOOR (L.M.I.)

R.C. ALUMINUM INDUSTRIES INC.
2805 N.W. 75 TH AVE.
MIAMI, FL. 33122
TEL. (305) 592-1515 FAX. (305) 592-2184

revisions:

no	date	by	description
F	06.03.09		UPDATED FOR 2007 FBC
G	08.05.10		NO CHANGE THIS SHEET
H	03.16.11		NO CHANGE THIS SHEET
I	02.13.12		NO CHANGE THIS SHEET

date: 11-02-01
scale: 1/2" = 1"
dr. by: HAMID
chk. by:

drawing no.
W01-75