MIAMI-DADE COUNTY
DEPARTMENT OF PERMITTING, ENVIRONMENT, AND REGULATORY AFFAIRS (PERA)
BOARD AND CODE ADMINISTRATION DIVISION

MIAMI-DADE COUNTY
PRODUCT CONTROL SECTION
11805 SW 26 Street, Room 208
Miami, Florida 33175-2474
T (786) 315-2590 F (786) 315-2599
www.miamidade.gov/pera

NOTICE OF ACCEPTANCE (NOA)

Eco Window Systems, LLC.
7955 NW 77th Avenue
Medley, FL 33166

SCOPE:

This NOA is being issued under the applicable rules and regulations governing the use of construction materials. The documentation submitted has been reviewed and accepted by Miami-Dade County PERA - Product Control Section to be used in Miami Dade County and other areas where allowed by the Authority Having Jurisdiction (AHJ).

This NOA shall not be valid after the expiration date stated below. The Miami-Dade County Product Control Section (In Miami Dade County) and/or the AHJ (in areas other than Miami Dade County) reserve the right to have this product or material tested for quality assurance purposes. If this product or material fails to perform in the accepted manner, the manufacturer will incur the expense of such testing and the AHJ may immediately revoke, modify, or suspend the use of such product or material within their jurisdiction. PERA reserves the right to revoke this acceptance, if it is determined by Miami-Dade County Product Control Section that this product or material fails to meet the requirements of the applicable building code.

This product is approved as described herein, and has been designed to comply with the Florida Building Code, including the High Velocity Hurricane Zone.

DESCRIPTION: Series-"300 ECO-Guard" Aluminum Fixed Window – L.M.I.

APPROVAL DOCUMENT: Drawing No. **W09-20**, titled "ECO-Guard Series-300 Alum Fixed Wdw. (L.M.I.)", sheets 1 through 5 of 5, dated 03/23/09, with revision B dated 01/30/12, prepared by Al-Farooq Corporation, signed and sealed by Javad Ahmad, P.E., bearing the Miami-Dade County Product Control Revision stamp with the Notice of Acceptance number and expiration date by the Miami-Dade County Product Control Section.

MISSILE IMPACT RATING: Large and Small Missile Impact Resistant

LABELING: Each unit shall bear a permanent label with the manufacturer's name or logo, city, state, model/series, and following statement: "Miami-Dade County Product Control Approved", unless otherwise noted herein.

RENEWAL of this NOA shall be considered after a renewal application has been filed and there has been no change in the applicable building code negatively affecting the performance of this product.

TERMINATION of this NOA will occur after the expiration date or if there has been a revision or change in the materials, use, and/or manufacture of the product or process. Misuse of this NOA as an endorsement of any product, for sales, advertising or any other purposes shall automatically terminate this NOA. Failure to comply with any section of this NOA shall be cause for termination and removal of NOA.

ADVERTISEMENT: The NOA number preceded by the words Miami-Dade County, Florida, and followed by the expiration date may be displayed in advertising literature. If any portion of the NOA is displayed, then it shall be done in its entirety.

INSPECTION: A copy of this entire NOA shall be provided to the user by the manufacturer or its distributors and shall be available for inspection at the job site at the request of the Building Official.

This NOA **revises NOA # 09-0413.08** and consists of this page 1 and evidence pages E-1 and E-2, as well as approval document mentioned above.

The submitted documentation was reviewed by **Manuel Perez, P.E.**

MIAMI-DADE COUNTY APPROVED

4/23/12

NOA No. 12-0223.25
Expiration Date: June 17, 2014
Approval Date: May 03, 2012

Eco Window Systems, LLC.

NOTICE OF ACCEPTANCE: EVIDENCE SUBMITTED

A. DRAWINGS

1. Manufacturer's die drawings and sections.
2. Drawing No **W09-20**, titled "ECO-Guard Series-300 Alum. Fixed Wdw. (L.M.I.)", sheets 1 through 5 of 5, dated 03/23/09, with revision B dated 01/30/12, prepared by Al-Farooq Corporation, signed and sealed by Javad Ahmad, P.E.

B. TESTS

1. Test reports on: 1) Air Infiltration Test, per FBC, TAS 202-94
   2) Uniform Static Air Pressure Test, Loading per FBC TAS 202-94
   3) Water Resistance Test, per FBC, TAS 202-94
   along with installation diagram of a 97 1/4" wide x 96 1/8" high Eco-Guard series 300 aluminum double fixed window, prepared by Hurricane Engineering & Testing Inc., Test Report No. **HETI-08-2192A**, dated 01/15/09, signed and sealed by Candido F. Font, P.E. ***(Submitted under previous NOA#09-0413.08)***
2. Test reports on: 1) Large Missile Impact Test per FBC, TAS 201-94
   2) Cyclic Wind Pressure Loading per FBC, TAS 203-94
   along with installation diagram of a 97 1/4" wide x 96 1/8" high Eco-Guard series 300 aluminum double fixed window, prepared by Hurricane Engineering & Testing Inc., Test Report No. **HETI-08-2192B**, dated 01/15/09, signed and sealed by Candido F. Font, P.E. ***(Submitted under previous NOA#09-0413.08)***
3. Test reports on: 1) Air Infiltration Test, per FBC, TAS 202-94
   2) Uniform Static Air Pressure Test, Loading per FBC, TAS 20294
   3) Water Resistance Test, per FBC, TAS 202-94
   along with installation diagram of a 48 1/4" wide x 96 3/8" high Eco-Guard series 300 aluminum circular arch top fixed window, prepared by Hurricane Engineering & Testing Inc., Test Report No. **HETI-08-2193A**, dated 01/15/09, signed and sealed by Candido F. Font, P.E. ***(Submitted under previous NOA#09-0413.08)***
4. Test reports on: 1) Large Missile Impact Test per FBC, TAS 201-94
   2) Cyclic Wind Pressure Loading per FBC, TAS 203-94
   along with installation diagram of a 48 1/4" wide x 96 3/8" high Eco-Guards 300 aluminum circular arch top fixed window, prepared by Hurricane Engineering & Testing Inc., Test Report No. **HETI-08-2193B**, dated 01/15/09, signed and sealed by Candido F. Font, P.E. ***(Submitted under previous NOA#09-0413.08)***
5. Test reports on: 1) Large Missile Impact Test per FBC, TAS 201-94
   2) Cyclic Wind Pressure Loading per FBC, TAS 203-94
   along with installation diagram of a 47 5/8" wide x 96" high Eco-Guard series 300 aluminum triangular top fixed window, prepared by Hurricane Engineering & Testing Inc., Test Report No. **HETI-08-2194**, dated 01/15/09, signed and sealed by Candido F. Font, P.E. ***(Submitted under previous NOA#09-0413.08)***

Jaime D. Gascon, P.E.
Product Control Examiner
NOA No. 12-0223.25
Expiration Date: June 17, 2014
Approval Date: May 03, 2012

NOTICE OF ACCEPTANCE: EVIDENCE SUBMITTED

B. TESTS (CONTINUED)

6. Test reports on: 1) Air Infiltration Test, per FBC, TAS 202-94
2) Uniform Static Air Pressure Test, Loading per FBC TAS 202-94
3) Water Resistance Test, per FBC, TAS 202-94
along with installation diagram of a 50 5/8" wide x 63 1/4" high Eco-Guard series 300 aluminum fixed window, prepared by Hurricane Engineering & Testing Inc., Test Report No. **HETI-08-2195A**, dated 01/15/09, signed and sealed by Candido F. Font, P.E. ***(Submitted under previous NOA#09-0413.08)***

C. CALCULATIONS

1. Anchor verification calculations and structural analysis, complying with FBC-2010, dated 01/27/12, prepared by Al-Farooq Corporation, signed and sealed by Javad Ahmad, P.E.

2. Glazing complies with ASTM E1300-04

D. QUALITY ASSURANCE

1. Miami-Dade Department of Permitting, Environment, and Regulatory Affairs (PERA)

E. MATERIAL CERTIFICATIONS

1. Notice of Acceptance No. **11–0624.02** issued to **E.I. DuPont DeNemours & Co.**, Inc. for their "**DuPont SentryGlas® Interlayer**" dated 08/25/11, expiring on 01/14/17.

2. Notice of Acceptance No. **11–0624.01** issued to **E.I. DuPont DeNemours & Co., Inc.** for their "**DuPont Butacite® PVB Interlayer**" dated 09/08/11, expiring on 12/11/16.

F. STATEMENTS

1. Statement letter of conformance, complying with FBC-2010, and of no financial interest, dated January 30, 2012, signed and sealed by Javad Ahmad, P.E.

G. OTHER

1. Notice of Acceptance No. **09-0413.08**, issued to ECO Window Systems. LLC for their "ECO-Guard Series-300 Aluminum Fixed Window – L.M.I.", approved on 06/17/09 and expiring on 06/17/14.

Manuel Perez, P.E.
Product Control Examiner
NOA No. 12-0223.25
Expiration Date: June 17, 2014
Approval Date: May 03, 2012

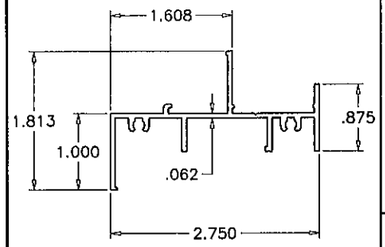

1 FRAME HEAD/SILL/JAMB

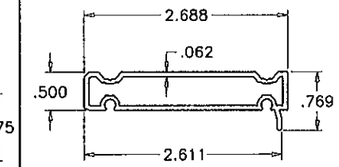

7 FLUSH FRAME ADAPTER

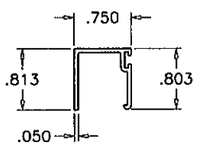

2 GLAZING BEAD

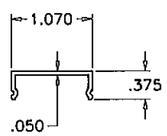

3 ANCHOR COVER

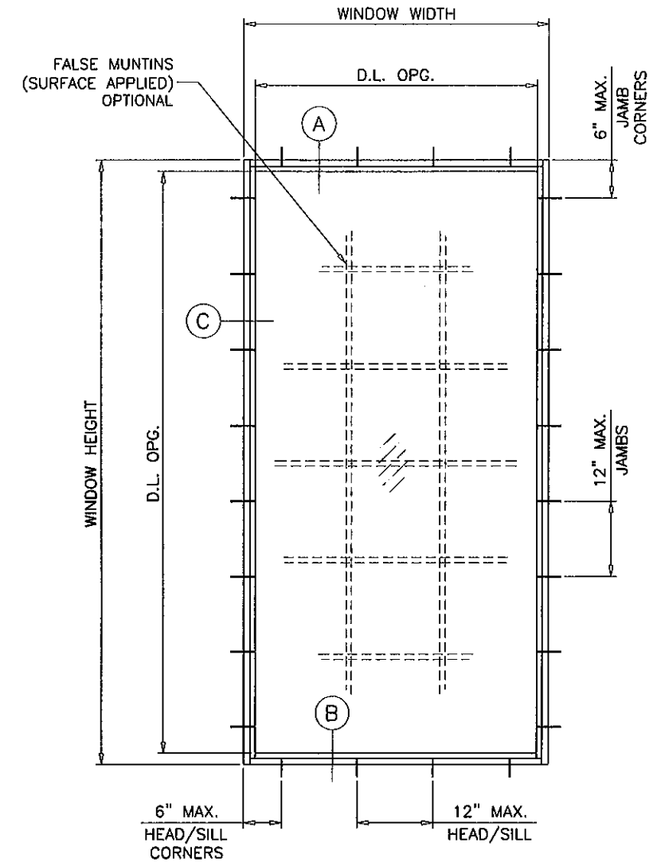

TYPICAL ELEVATION

GLASS D.L.O. DIMS.

D.L.O. HEIGHT = WINDOW HEIGHT − 3.625"
D.L.O. WIDTH = WINDOW WIDTH − 3.625"

ECO-GUARD SERIES-300 ALUMINUM FIXED WINDOW

DESIGN LOAD RATINGS FOR THESE WINDOWS TO BE AS PER CHARTS SHOWN ON SHEETS 2.

APPROVAL APPLIES TO SINGLE UNITS OR SIDE BY SIDE COMBINATIONS OF FIX./FIX. OR FIXED WITH OTHER WINDOW TYPES IN MODULES OF TWO OR MORE WINDOWS USING MIAMI-DADE COUNTY APPROVED MULLIONS IN BETWEEN. LOWER DESIGN PRESSURE FROM WINDOWS OR MULLION APPROVAL WILL APPLY TO ENTIRE SYSTEM.

THIS PRODUCT HAS BEEN DESIGNED AND TESTED TO COMPLY WITH THE REQUIREMENTS OF THE FLORIDA BUILDING CODE INCLUDING HIGH VELOCITY HURRICANE ZONE (HVHZ).

WOOD BUCKS BY OTHERS, MUST BE ANCHORED PROPERLY TO TRANSFER LOADS TO THE STRUCTURE.

ANCHORS SHALL BE AS LISTED, SPACED AS SHOWN ON DETAILS, ANCHORS EMBEDMENT TO BASE MATERIAL SHALL BE BEYOND WALL DRESSING OR STUCCO.

ANCHORING OR LOADING CONDITIONS NOT SHOWN IN THESE DETAILS ARE NOT PART OF THIS APPROVAL.

A LOAD DURATION INCREASE IS USED IN DESIGN OF ANCHORS INTO WOOD ONLY.

MATERIALS INCLUDING BUT NOT LIMITED TO STEEL/METAL SCREWS, THAT COME INTO CONTACT WITH OTHER DISSIMILAR MATERIALS SHALL MEET THE REQUIREMENTS OF THE FLORIDA BLDG. CODE SECTION 2003.8.4.

THESE WINDOWS ARE RATED FOR LARGE & SMALL MISSILE IMPACT. SHUTTERS ARE NOT REQUIRED.

Engr: JAVAD AHMAD
CIVIL
FLA. PE # 70592
C.A.N. 3538
FEB 01 2012

PRODUCT REVISED
as complying with the Florida Building Code
Acceptance No 12-0223.25
Expiration Date JUNE 17, 2014
By Manuel Perez
Miami Dade Product Control

AL-FAROOQ CORPORATION
ENGINEERS & PRODUCT DEVELOPMENT
1235 S.W. 87 AVE
MIAMI, FLORIDA 33174
TEL. (305) 264-8100 FAX. (305) 262-6978

COMP-ANL\W09-20ECO

ECO-GUARD SERIES-300 ALUM FIXED WDW. (L.M.I.)

ECO WINDOW SYSTEMS, LLC.
7955 N.W. 77 AVE.
MEDLEY, FL. 33166
TEL. (305) 882-1144 FAX (305) 885-5902

revisions:

no	date	by	description
A	05.18.09		REV. PER BCCO COMMENTS
B	01.30.12		UPDATED TO 2010 FBC

date: 03-23-09
scale: 1/2"=1'-0"
dr. by: HAMID
chk. by:

drawing no.
W09-20

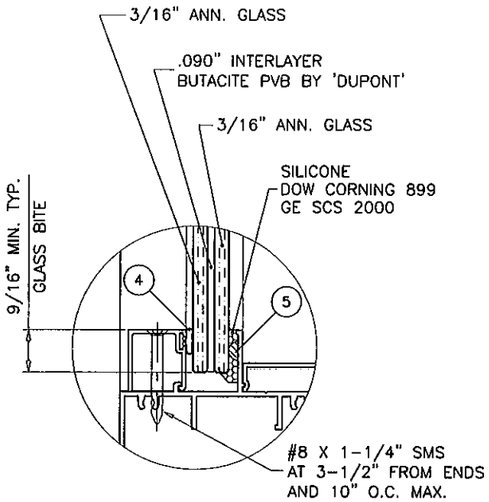

GLASS TYPE 'C'

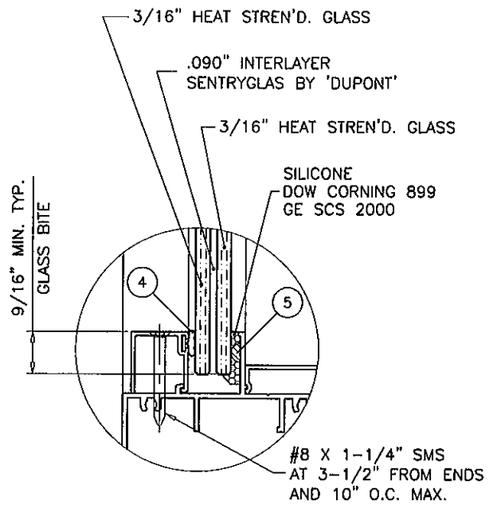

GLASS TYPE 'D'

GLAZING OPTIONS

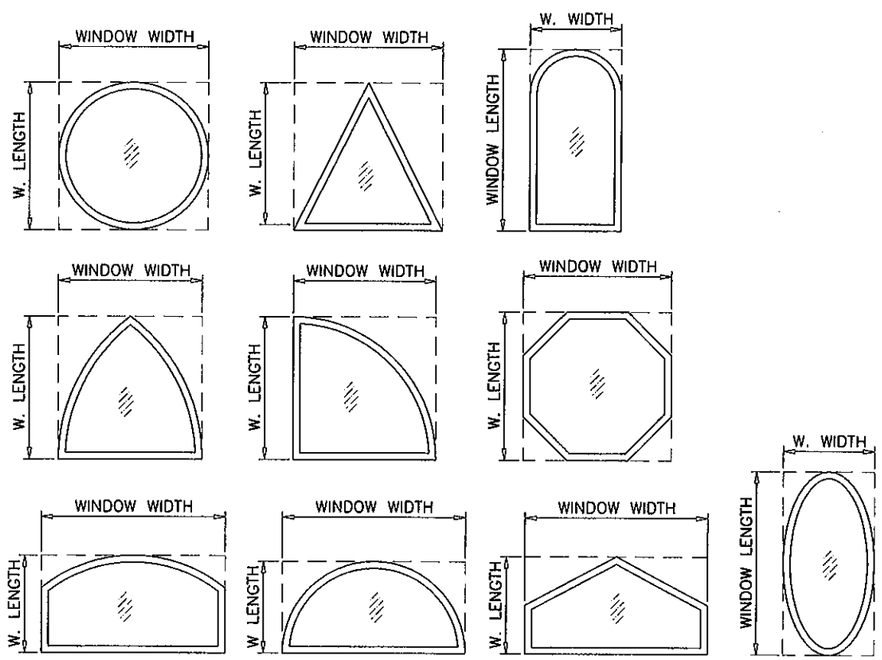

ALLOWABLE LOADS FOR ALTERNATE SHAPES AS SHOWN ABOVE OR SIMILAR CAN BE VERIFIED BY INSCRIBING PICTURE WINDOW SHAPE WITHIN SQUARE OR RECTANGLE AS SHOWN IN DOTTED LINES AND OBTAINING ALLOWABLE LOADS FROM THOSE SHAPES.

DESIGN LOAD CAPACITY - PSF					
WINDOW DIMS.		GLASS TYPE 'C'		GLASS TYPE 'D'	
WIDTH (W)	LENGTH (L)	EXT.(+)	INT.(-)	EXT.(+)	INT.(-)
24"	36"	75.0	80.0	80.0	90.0
30"		75.0	80.0	80.0	90.0
36"		75.0	80.0	80.0	90.0
42"		75.0	80.0	80.0	90.0
48"		75.0	80.0	80.0	90.0
54"		75.0	80.0	80.0	90.0
60"		75.0	80.0	80.0	90.0
66"		75.0	80.0	80.0	90.0
72"		75.0	80.0	80.0	90.0
24"	48"	75.0	80.0	80.0	90.0
30"		75.0	80.0	80.0	90.0
36"		75.0	80.0	80.0	90.0
42"		75.0	80.0	80.0	90.0
48"		75.0	80.0	80.0	90.0
54"		75.0	80.0	80.0	90.0
60"		75.0	80.0	80.0	90.0
66"		75.0	80.0	80.0	90.0
72"		75.0	76.6	80.0	90.0
24"	60"	75.0	80.0	80.0	90.0
30"		75.0	80.0	80.0	90.0
36"		75.0	80.0	80.0	90.0
42"		75.0	80.0	80.0	90.0
48"		75.0	80.0	80.0	90.0
54"		66.8	71.3	80.0	90.0
60"		60.2	64.2	80.0	90.0
66"		60.2	64.2	80.0	90.0
72"		60.2	64.2	80.0	90.0
24"	72"	75.0	80.0	80.0	90.0
30"		75.0	80.0	80.0	90.0
36"		75.0	80.0	80.0	90.0
42"		75.0	80.0	80.0	90.0
48"		75.0	76.6	80.0	90.0
54"		66.8	71.3	80.0	90.0
60"		60.2	64.2	80.0	90.0
24"	84"	75.0	80.0	80.0	90.0
30"		75.0	80.0	80.0	90.0
36"		75.0	80.0	80.0	90.0
42"		70.0	70.0	80.0	90.0
48"		65.6	65.6	80.0	90.0
54"		64.3	64.3	80.0	90.0
24"	96"	75.0	80.0	80.0	90.0
30"		75.0	80.0	80.0	90.0
36"		75.0	76.2	80.0	90.0
42"		64.6	64.6	80.0	90.0
48"		59.9	59.9	80.0	90.0
24"	108"	75.0	80.0	80.0	90.0
30"		75.0	80.0	80.0	90.0
36"		74.5	74.5	80.0	90.0
42"		61.5	61.5	80.0	90.0
24"	120"	75.0	80.0	80.0	90.0
30"		75.0	80.0	80.0	90.0
36"		74.5	74.5	80.0	90.0

DESIGN LOAD CAPACITY - PSF					
WINDOW DIMS.		GLASS TYPE 'C'		GLASS TYPE 'D'	
WIDTH (W)	LENGTH (L)	EXT.(+)	INT.(-)	EXT.(+)	INT.(-)
26-1/2"	26"	75.0	80.0	80.0	90.0
37"		75.0	80.0	80.0	90.0
53-1/8"		75.0	80.0	80.0	90.0
74"		75.0	80.0	80.0	90.0
26-1/2"	38-3/8"	75.0	80.0	80.0	90.0
37"		75.0	80.0	80.0	90.0
53-1/8"		75.0	80.0	80.0	90.0
74"		75.0	80.0	80.0	90.0
26-1/2"	50-5/8"	75.0	80.0	80.0	90.0
37"		75.0	80.0	80.0	90.0
53-1/8"		71.3	76.0	80.0	90.0
74"		71.3	73.1	80.0	90.0
26-1/2"	63"	75.0	80.0	80.0	90.0
37"		75.0	80.0	80.0	90.0
53-1/8"		67.9	72.5	80.0	90.0
26-1/2"	76"	75.0	80.0	80.0	90.0
37"		75.0	80.0	80.0	90.0
53-1/8"		67.9	69.9	80.0	90.0

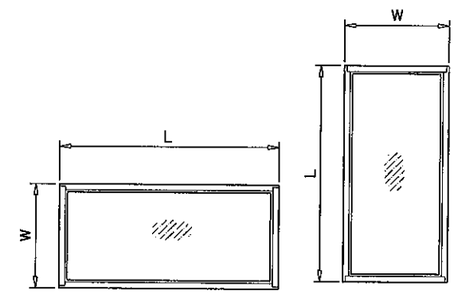

NOTE:
WIDTH AND LENGTH DIMENSIONS CAN BE ORIENTED VERTICALLY OR HORIZONTALLY AS SHOWN ABOVE.

NOTE:
GLASS CAPACITIES ON THIS SHEET ARE BASED ON ASTM E1300-04 (3 SEC. GUSTS).

Engr. JAVAD AHMAD
CIVIL
FLA. PE. # 70592
C.A.N. 3538

FEB 01 2012

PRODUCT REVISED
as complying with the Florida Building Code
Acceptance No 12-0223.25
Expiration Date June 17, 2014
By Manuel Cruz
Miami-Dade Product Control

AL-FAROOQ CORPORATION
ENGINEERS & PRODUCT DEVELOPMENT
1235 S.W. 87 AVE
MIAMI, FLORIDA 33174
TEL (305) 264-8100 FAX. (305) 262-6978
COMP-ANL\W09-20ECO

ECO-GUARD SERIES-300 ALUM FIXED WDW. (L.M.I.)

ECO WINDOW SYSTEMS, LLC.
7955 N.W. 77 AVE.
MEDLEY, FL. 33166
TEL. (305) 882-1144 FAX (305) 885-5902

revisions:

no	date	by	description
A	05.18.09		REV. PER BCCO COMMENTS
B	01.30.12		UPDATED TO 2010 FBC

date: 03-23-09
scale: 1/2"=1'-0"
dr. by: HAMID
chk. by:

drawing no.
W09-20

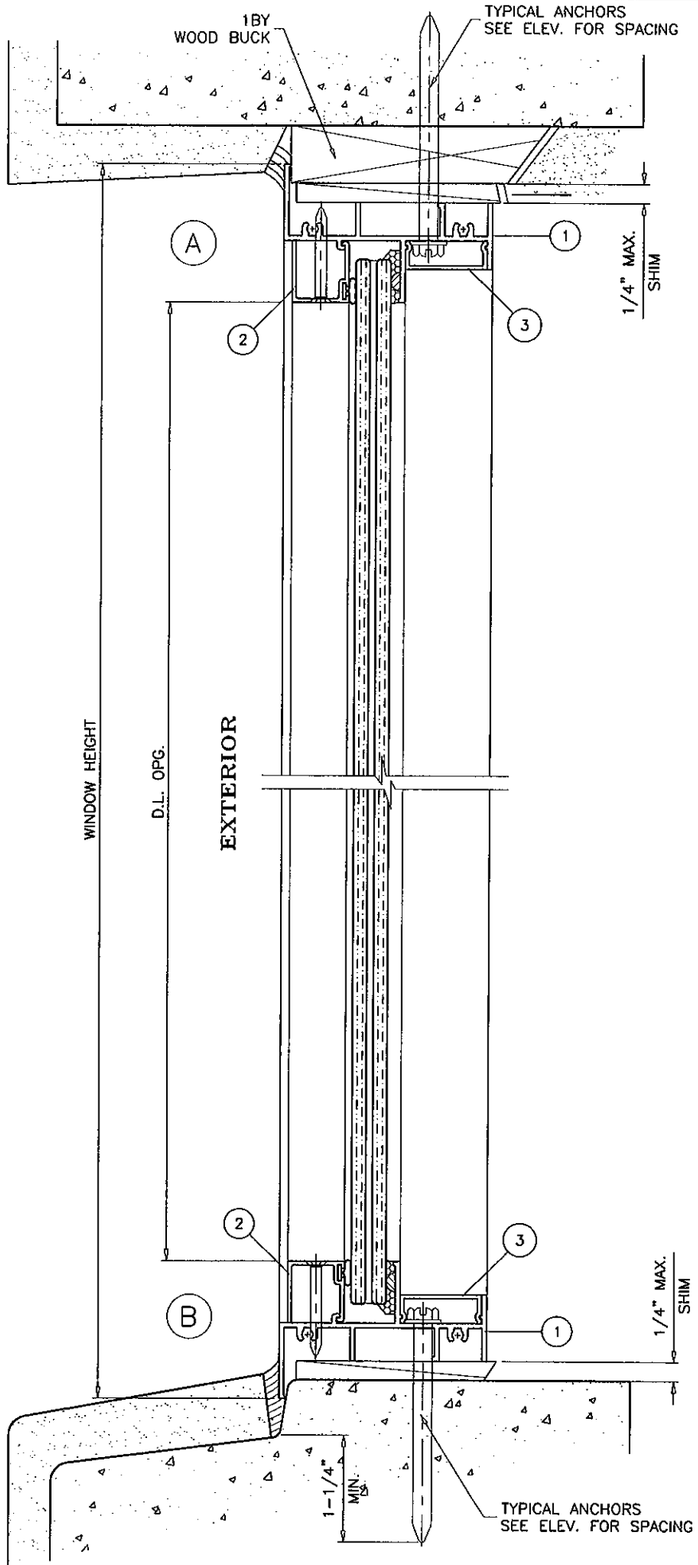

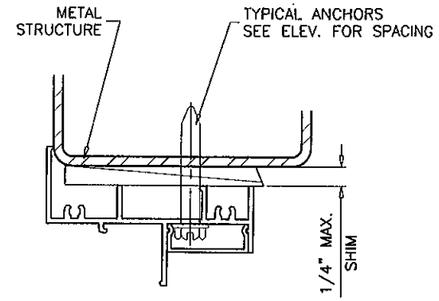

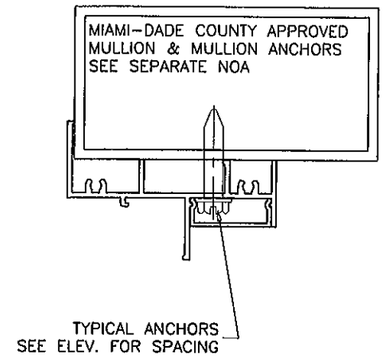

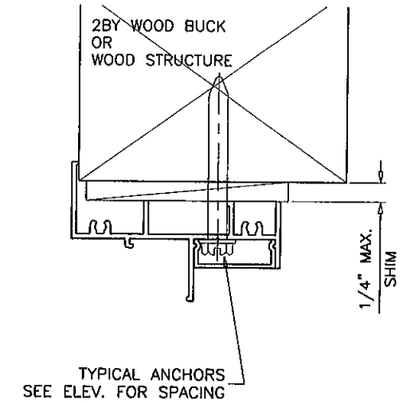

WOOD BUCKS AND METAL STRUCTURE NOT BY ECO WDW. MUST SUSTAIN LOADS IMPOSED BY GLAZING SYSTEM AND TRANSFER THEM TO THE BUILDING STRUCTURE.

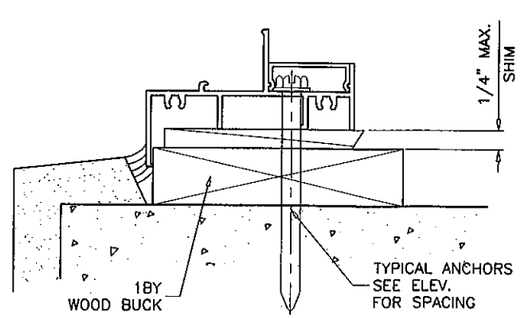

TYPICAL ANCHORS: SEE ELEV. FOR SPACING

1/4" DIA. TAPCON BY 'ITW' (Fu=120 KSI, Fy=92 KSI)

INTO 2BY WOOD BUCKS OR WOOD STRUCTURES
1-3/8" MIN. PENETRATION INTO WOOD

THRU 1BY BUCKS INTO CONC. OR MASONRY
1-1/4" MIN. EMBED INTO CONC. OR MASONRY

DIRECTLY INTO CONC. OR MASONRY
1-1/4" MIN. EMBED INTO CONC. OR MASONRY

1/4" DIA. TEKS OR SELF DRILLING SCREWS (GRADE 5 CRS)

INTO METAL STRUCTURES

STEEL : 1/8" THK. MIN. (Fy = 36 KSI MIN.)
ALUMINUM : 1/8" THK. MIN. (6063-T5 MIN.)
(STEEL IN CONTACT WITH ALUMINUM TO BE PLATED OR PAINTED)

#14 SMS OR SELF DRILLING SCREWS (GRADE 2 CRS)

INTO MIAMI-DADE COUNTY APPROVED MULLIONS (MIN. THK. = .090")
(NO SHIM SPACE)

TYPICAL EDGE DISTANCE

INTO CONCRETE AND MASONRY = 2-1/2" MIN.
INTO WOOD STRUCTURE = 1" MIN.
INTO METAL STRUCTURE = 3/4" MIN.

CONCRETE f'c = 3000 PSI MIN.
C-90 HOLLOW/FILLED BLOCK f'm = 1500 PSI MIN.

SEALANT:

ALL JOINTS AND FRAME CONNECTIONS SEALED WITH JOINT SEALER.

Engr: JAVAD AHMAD
CIVIL
FLA. PE # 70592
C.A.N. 3538
FEB 01 2012

PRODUCT REVISED
as complying with the Florida
Building Code
Acceptance No 12-0223.25
Expiration Date June 17, 2014
By Manuel Sera
Miami-Dade Product Control

AL-FAROOQ CORPORATION
ENGINEERS & PRODUCT DEVELOPMENT
1235 S.W. 87 AVE
MIAMI, FLORIDA 33174
TEL. (305) 264-8100 FAX. (305) 262-6978
COMP-ANL\W09-20ECO

ECO-GUARD SERIES-300 ALUM FIXED WDW. (L.M.I.)
ECO WINDOW SYSTEMS, LLC.
7955 N.W. 77 AVE.
MEDLEY, FL. 33166
TEL. (305) 882-1144 FAX (305) 885-5902

revisions:

no	date	by	description
A	05.18.09		NO CHANGE THIS SHEET
B	01.30.12		NO CHANGE THIS SHEET

date: 03-23-09
scale: 1/2" = 1"
dr. by: HAMID
chk. by:

drawing no.
W09-20

sheet 3 of 5

ITEM #	PART #	REQD.	DESCRIPTION	MATERIAL	MANF./SUPPLIER/REMARKS
1	FY301	2	FRAME HEAD/SILL/JAMB	6063-T6	--
2	FY302	AS REQD.	GLAZING BEAD- 7/16" GLASS	6063-T6	-
3	FY303	AS REQD.	ANCHOR COVER	6063-T5	-
4	E203	AS REQD.	GLAZING BEAD BULB	NEOPRENE	ULTRAFAB
5	FLB-50	1	GLASS SPACER - 1/8" HIGH	SILICONE	FRANK LOWE
6	#10 x 1"	8	FRAME ASSEMBLY SCREWS	CRS	PH SMS
7	FY120	-	FLUSH FRAME ADAPTER	6063-T6	OPTIONAL

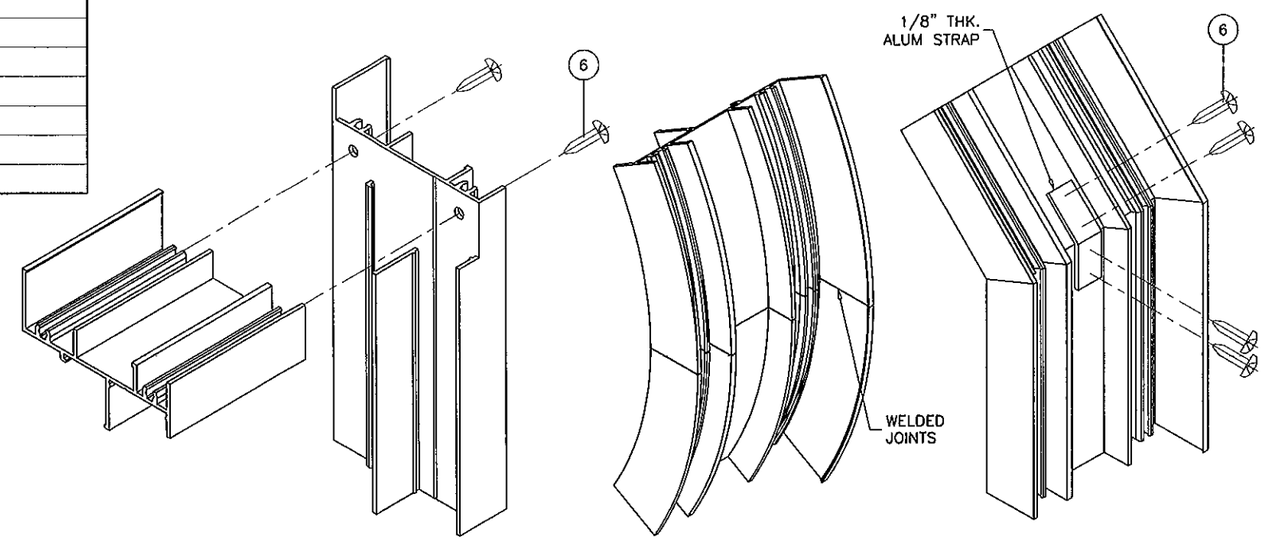

RECT. OR SQUARE WINDOWS

CIRCULAR WINDOWS

MITER CORNERS

CORNER DETAILS

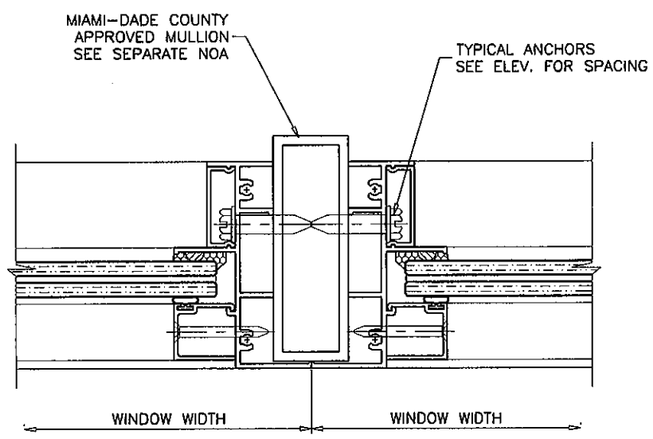

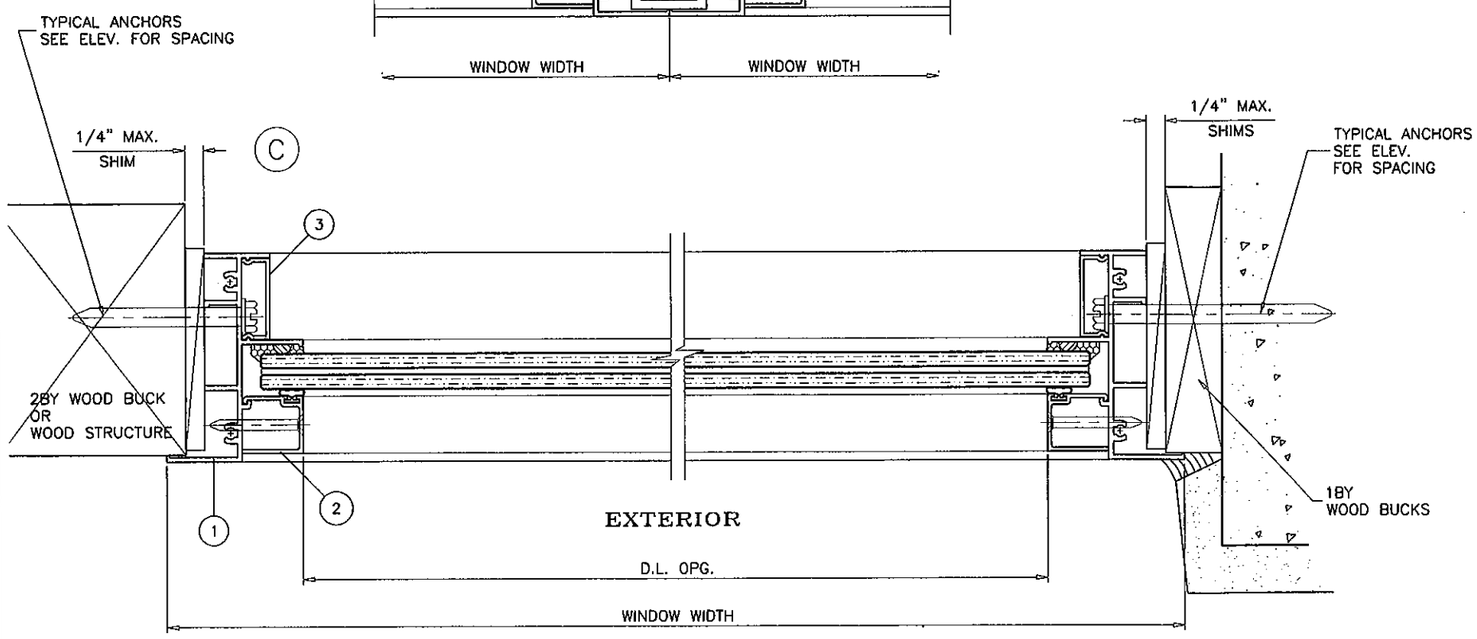

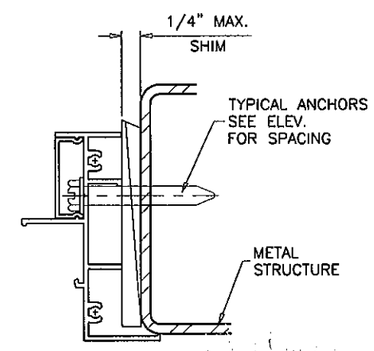

Engr: JAVAD AHMAD
CIVIL
FLA. PE # 70592
C.A.N. 3638
FEB 01 2012

PRODUCT REVISED
as complying with the Florida
Building Code
Acceptance No 12-0203.25
Expiration Date JUNE 17, 2014
By Manuel Perez
Miami/Dade Product Control

AL-FAROOQ CORPORATION
ENGINEERS & PRODUCT DEVELOPMENT
1235 S.W. 87 AVE
MIAMI, FLORIDA 33174
TEL. (305) 264-8100 FAX. (305) 262-6978

COMP-ANL\W09-20ECO

ECO-GUARD SERIES-300 ALUM FIXED WDW. (L.M.I.)

ECO WINDOW SYSTEMS, LLC.
7955 N.W. 77 AVE.
MEDLEY, FL. 33166
TEL. (305) 882-1144 FAX (305) 885-5902

revisions:

no	date	by	description
A	05.18.09		NO CHANGE THIS SHEET
B	01.30.12		NO CHANGE THIS SHEET

date: 03-23-09
scale: 1/2" = 1"
dr. by: HAMID
chk. by:

drawing no.
W09-20

sheet 4 of 5

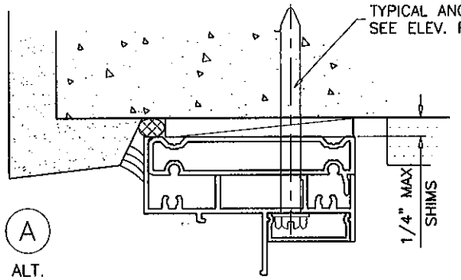

A
ALT.

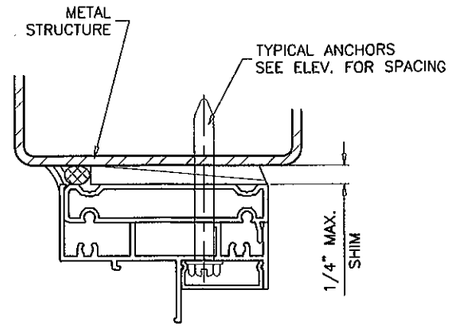

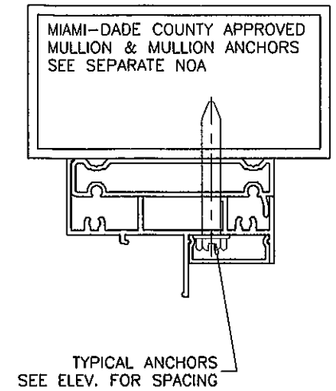

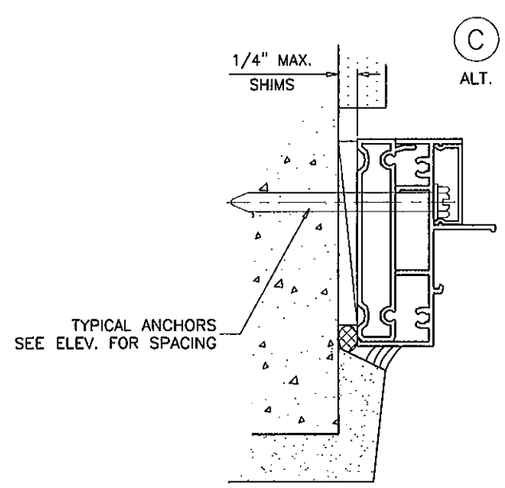

C
ALT.

B
ALT.

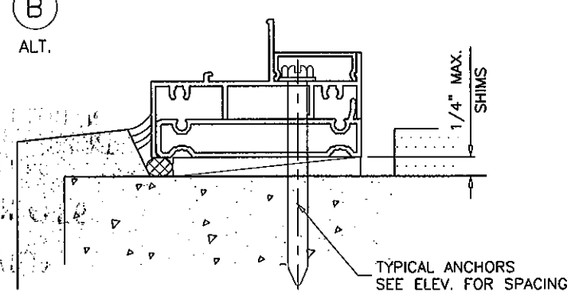

INSTALLATION DETAILS WITH FLUSH FRAME ADAPTER

Engr: JAVAD AHMAD
CIVIL
FLA. PE # 70592
C.A.N. 3539

FEB 01 2012

PRODUCT REVISED
as complying with the Florida
Building Code
Acceptance No 12-0223.25
Expiration Date JUNE 11, 2014
By Manuel Perez
Miami Dade Product Control

AL-FAROOQ CORPORATION
ENGINEERS & PRODUCT DEVELOPMENT
1235 S.W. 87 AVE
MIAMI, FLORIDA 33174
TEL (305) 264-8100 FAX. (305) 262-6978

COMP-ANL\W09-20ECO

ECO-GUARD SERIES-300 ALUM FIXED WDW. (L.M.I.)

ECO WINDOW SYSTEMS, LLC.
7955 N.W. 77 AVE.
MEDLEY, FL. 33166
TEL. (305) 882-1144 FAX (305) 885-5902

revisions:

no	date	by	description
A	05.18.09		NO CHANGE THIS SHEET
B	01.30.12		NO CHANGE THIS SHEET

date: 03-23-09
scale: 1/2" = 1"
dr. by: HAMID
chk. by:

drawing no.
W09-20

sheet 5 of 5