MIAMI-DADE COUNTY
DEPARTMENT OF PERMITTING, ENVIRONMENT, AND REGULATORY AFFAIRS (PERA)
BOARD AND CODE ADMINISTRATION DIVISION

MIAMI-DADE COUNTY
PRODUCT CONTROL SECTION
11805 SW 26 Street, Room 208
Miami, Florida 33175-2474
T (786) 315-2590 F (786) 315-2599
www.miamidade.gov/pera/

# NOTICE OF ACCEPTANCE (NOA)

**Crawford Tracy Corporation**
**3301 S. W. 13th Drive**
**DeerField Beach, Fl. 33442**

**SCOPE:**

This NOA is being issued under the applicable rules and regulations governing the use of construction materials. The documentation submitted has been reviewed and accepted by Miami-Dade County PERA -Product Control Section to be used in Miami Dade County and other areas where allowed by the Authority Having Jurisdiction (AHJ).

This NOA shall not be valid after the expiration date stated below. The Miami-Dade County Product Control Section (In Miami Dade County) and/or the AHJ (in areas other than Miami Dade County) reserve the right to have this product or material tested for quality assurance purposes. If this product or material fails to perform in the accepted manner, the manufacturer will incur the expense of such testing and the AHJ may immediately revoke, modify, or suspend the use of such product or material within their jurisdiction. PERA reserves the right to revoke this acceptance, if it is determined by Miami-Dade County Product Control Section that this product or material fails to meet the requirements of the applicable building code.
This product is approved as described herein, and has been designed to comply with the Florida Building Code, including the High Velocity Hurricane Zone.

**DESCRIPTION: Series "Pro-Tech 7SG " Aluminum Glazed Curtain Wall System–Non-Impact**

**APPROVAL DOCUMENT:** Drawing No. **W04-105 Rev I**, titled "Pro-Tech 7SG Alum Curtain Wall System (NI)", sheets 1 through 5, 5.1, 6 through 17 of 17, dated 12/30/04 and last revised on FEB 15, 2012, prepared by Al-Farooq Corporation, signed and sealed by Javad Ahmad, P. E., bearing the Miami-Dade County Product Control Revision stamp with the Notice of Acceptance number and expiration date by the Miami-Dade County Product Control Section.

**MISSILE IMPACT RATING: None: Hurricane Protection System, complying with FBC is required.**

1. See Design Pressure (DP), sheets 1 thru 8. Lower DP from mullion, glass and/or anchor shall control.
2. Installation to steel structure is limited as approved in NOA. Embedded steel stud not a part of this approval.
3. Min ¼" metal thickness is required for installation into Metal substrate.

**LABELING:** Each unit shall bear a permanent label with the manufacturer's name or logo, city, state and series and following statement: "Miami-Dade County Product Control Approved", noted herein.

**RENEWAL** of this NOA shall be considered after a renewal application has been filed and there has been no change in the applicable building code negatively affecting the performance of this product.

**TERMINATION** of this NOA will occur after the expiration date or if there has been a revision or change in the materials, use, and/or manufacture of the product or process. Misuse of this NOA as an endorsement of any product, for sales, advertising or any other purposes shall automatically terminate this NOA. Failure to comply with any section of this NOA shall be cause for termination and removal of NOA.

**ADVERTISEMENT:** The NOA number preceded by the words Miami-Dade County, Florida, and followed by the expiration date may be displayed in advertising literature. If any portion of the NOA is displayed, then it shall be done in its entirety.

**INSPECTION:** A copy of this entire NOA shall be provided to the user by the manufacturer or its distributors and shall be available for inspection at the job site at the request of the Building Official.
This NOA **revises NOA # 10-1213.08** and consists of this page 1 and evidence pages E-1, as well as approval document mentioned above.
The submitted documentation was reviewed by **Ishaq I. Chanda, P.E.**

MIAMI-DADE COUNTY APPROVED

5/17/12

## NOTICE OF ACCEPTANCE: EVIDENCE SUBMITTED

**A. DRAWINGS**

1. Manufacturer's die drawings and sections (submitted in file # **10-1213.08**).
2. Drawing No. **W04-105 Rev I**, titled "Pro-Tech 7SG Alum Curtain Wall System (NI)", sheets 1 through 5, 5.1, 6 through 17 of 17, dated 12/30/04 and last revised on FEB 15, 2012, prepared by Al-Farooq Corporation, signed and sealed by Javad Ahmad, P.E.

Note: This revision consists of FBC 2010 notes & optional alum alloy 6005A-T61addition only.

**B. TESTS** (Submitted under files # **10-1213.08/ 08-0415.04)**

1. Test reports on 1) Air Infiltration Test, per TAS 202-94
   2) Uniform Static Air Pressure Test, Loading per TAS 202-94
   3) Water Resistance Test, per TAS 202-94
   Along with installation diagram of aluminum glazed curtain wall system marked-up by American Test Lab of South Florida. Test Report No. **ATL 0726.01-04**, dated 08-23-04 and last revised on 03/10/2006, signed and sealed by William R. Mehner, P.E.
2. Test reports on 1) Uniform Static Air Pressure Test, Loading per TAS 202-94
   Along with installation diagram of aluminum glazed curtain wall system marked-up by American Test Lab of South Florida, Test Report No. **ATL 0419.02-04**, dated 08-19-04 signed & sealed by William R. Mehner, P.E.
3. Test reports on 1) Uniform Static Air Pressure Test, Loading per TAS 202-94
   Along with installation diagram of aluminum glazed curtain wall system marked-up by American Test Lab of South Florida, Test Report No. **ATL 1129.01-04**, dated 01-05-05 signed & sealed by William R. Mehner, P.E.
4. Additional Test report **ATL-1130.01-07** dated 01/29/08 for insulated glazed C.W. Sys per TAS 202, issued by American Test Lab, signed & sealed by William R. Mehner, P.E. & Henry Hatem, P. E.

**C. CALCULATIONS**

1. Anchor verification calculations and structural analysis, complying with FBC-2007, prepared by Al Farooq Corporation, dated 11/23/10, 04/15/11 and last revised on May 16, 2011, signed and sealed by Javad Ahmad, P.E. (Submitted under file # **10-1213.08**)
2. Glazing complies w/ ASTME-1300-02 & -04

**D. QUALITY ASSURANCE**

1. Miami Dade Department of Permitting, Environment, and Regulatory Affairs (PERA).

**E. MATERIAL CERTIFICATIONS**

1. Mechanical properties of Aluminum Alloy 6005A-T61 by ALCO Venture Inc with min Fu (tensile)=38 ksi, min Fy(tensile)=35 ksi , min Fy (compressive)=35 ksi , min Fsu (tensile) and min E=10100 ksi

**F. STATEMENTS**

1. Statement letter of conformance to FBC 2010 and letter of no financial interest, prepared by Al Farooq Corporation, dated 01/16/12, signed and sealed by Javad Ahmad, P.E.
2. Statement letter dated FEB 04, 2010 issued by Key Mark Aluminum Extrusion for improved structural aluminum alloy 6005A with mechanical properties equal or surpass aluminum alloy 6105 & 6005 (ADM).
3. Statement letter of conformance to FBC 2007 and letter of no financial interest, prepared by Al-Farooq Corporation, dated 11/03/10, signed and sealed by Javad Ahmad, P.E.
4. Lab compliance as part of the above referenced test report.

**G. OTHER**

1. This NOA **revises** NOA # **10-1213.08**, expiring on Sep. 14, 2016.
2. Test proposals dated 11/06/2003 & 08/27/07, approved by BC

Ishaq I. Chanda

**Ishaq I. Chanda, P.E.**
**Product Control Examiner**
**NOA No 12-0223.36**
**Expiration Date: September 14, 2016**
**Approval Date: May 24, 2012**

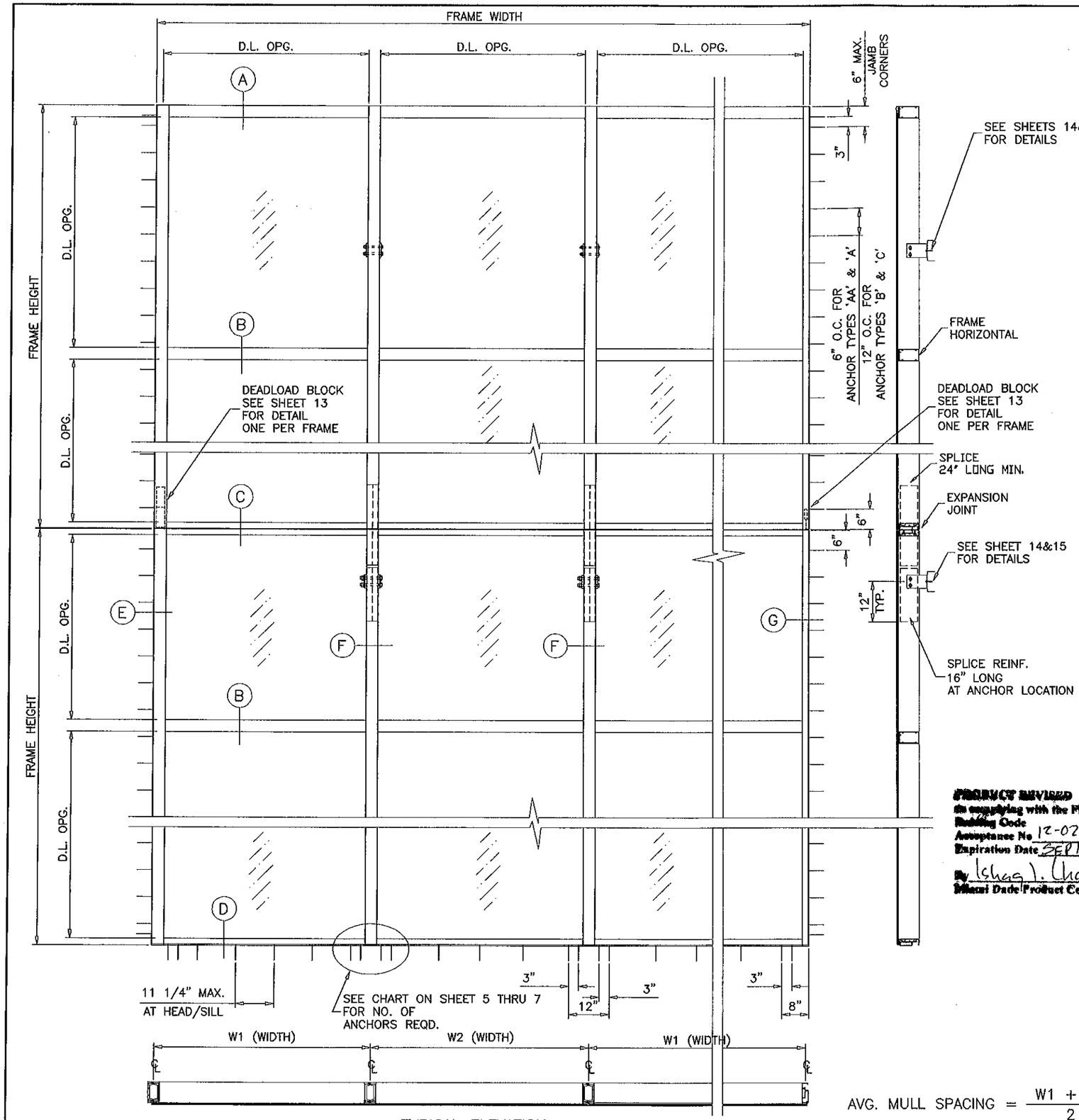


TYPICAL ELEVATION

## PRO-TECH 7SG ALUM CURTAIN WALL SYSTEM

THIS SYSTEM IS NOT RATED FOR IMPACT.

MIAMI-DADE COUNTY APPROVED IMPACT RESISTANT SHUTTERS ARE REQUIRED.

SEE SHEETS 2 THRU 8 FOR DESIGN LOAD RATING.

CODE REQUIREMENTS FOR SAFEGUARDS MUST BE OBSERVED.

---

THIS PRODUCT HAS BEEN DESIGNED AND TESTED TO COMPLY WITH THE REQUIREMENTS OF THE FLORIDA BUILDING CODE INCLUDING HIGH VELOCITY HURRICANE ZONE (HVHZ).

WOOD BUCKS BY OTHERS, MUST BE ANCHORED PROPERLY TO TRANSFER LOADS TO THE STRUCTURE.

ANCHORS SHALL BE AS LISTED, SPACED AS SHOWN ON DETAILS, ANCHORS EMBEDMENT TO BASE MATERIAL SHALL BE BEYOND WALL DRESSING OR STUCCO.

ANCHORING OR LOADING CONDITIONS NOT SHOWN IN THESE DETAILS ARE NOT PART OF THIS APPROVAL.

A LOAD DURATION INCREASE IS USED IN DESIGN OF ANCHORS INTO WOOD ONLY.

MATERIALS INCLUDING BUT NOT LIMITED TO STEEL/METAL SCREWS, THAT COME INTO CONTACT WITH OTHER DISSIMILAR MATERIALS SHALL MEET THE REQUIREMENTS OF THE FLORIDA BLDG. CODE SECTION 2003.8.4.

---

## INSTRUCTIONS:

USE CHARTS AS FOLLOWS.

STEP 1 DETERMINE DESIGN WIND LOAD REQUIREMENT BASED ON WIND VELOCITY, BLDG. HEIGHT, WIND ZONE USING APPLICABLE ASCE 7 STANDARD.

STEP 2 CHECK MULLION CAPACITY FOR A GIVEN SPACING AND HEIGHT USING CHARTS ON SHEET 2 FOR SINGLE SPANS, AND CHARTS ON SHEET 3 FOR EQUAL MULTIPLE SPANS.

STEP 3 SEE CHART ON SHEET 4 FOR DESIGN LOAD CAPACITY OF DESIRED GLASS SIZE.

STEP 4 USING CHART ON SHEET 5, 5.1 THRU 7 SELECT ANCHOR OPTION WITH DESIGN RATING MORE THAN DESIGN LOAD SPECIFIED IN STEP 1 ABOVE.

STEP 5 FOR CURTAIN WALL INTERMEDIATE ANCHOR CAPACITY SEE SHEETS 14 AND 15.

STEP 6 THE LOWEST VALUE RESULTING FROM STEPS 2, 3, 4 AND 5 SHALL APPLY TO ENTIRE SYSTEM.

$$\text{AVG. MULL SPACING} = \frac{W1 + W2}{2}$$

PRODUCT REVIEWED
as complying with the Florida Building Code
Acceptance No. 12-0223.36
Expiration Date SEPT 14, 2016
By Ishaq I. Chand
Miami Dade Product Control

MONOLITHIC GLASS
MONOLITHIC INSULATING GLASS
NON-IMPACT

Engr: JAVAD AHMAD
CIVIL
FLA. PE # 70592
C.A.N. 3538
FEB 15 2012


AL-FAROOQ CORPORATION
ENGINEERS & PRODUCT DEVELOPMENT
1235 S.W. 87 AVE
MIAMI, FLORIDA 33174
TEL (305) 264-8100 FAX. (305) 262-6978
STORE\W04-105CTC


PRO-TECH 7SG ALUM CURTAIN WALL SYSTEM (N.I.)


CRAWFORD TRACEY CORPORATION
3301 SW 13TH DRIVE
DEERFIELD BEACH, FL. 33442-8101
TEL. (954) 698-6888 FAX. (954) 698-6889


revisions:

| no | date | by | description |
|---|---|---|---|
| E | 08.19.08 | | NO CHANGE THIS SHEET |
| F | 11.11.10 | | GENERAL REVISION |
| G | 03.02.11 | | REV. PER BCCO COMMENTS |
| H | 05.10.11 | | REV. PER BNC COMMENTS |
| I | 01.16.12 | | UPDATED TO 2010 FBC |

date: 12-30-04
scale: 3/8"=1'-0"
dr. by: HAMID
chk. by:

drawing no.
W04-105

## MULLION LOAD CAPACITY – PSF
SINGLE SPANS (WITH OR WITHOUT INTERMEDIATE HORIZONTALS)

| NOMINAL DIMS. | | UNREINFORCED | ALUM REINF. | STEEL REINF. |
|---|---|---|---|---|
| WIDTH (W) | FRAME HEIGHT | EXT.(+) & INT.(–) | EXT.(+) & INT.(–) | EXT.(+) & INT.(–) |
| 36" | 120" | 166.4 | 200.0 | 200.0 |
| 39" | | 153.6 | 200.0 | 200.0 |
| 42" | | 142.7 | 200.0 | 200.0 |
| 45" | | 133.1 | 200.0 | 200.0 |
| 48" | | 124.8 | 200.0 | 200.0 |
| 51" | | 117.5 | 197.4 | 200.0 |
| 54" | | 111.0 | 186.4 | 200.0 |
| 57" | | 105.1 | 176.6 | 198.3 |
| 60" | | 99.9 | 167.8 | 188.4 |
| 63" | | – | 159.8 | 179.4 |
| 66" | | – | 152.5 | 171.2 |
| 69" | | – | 145.9 | 163.8 |
| 72" | | – | 139.8 | 157.0 |
| 36" | 126" | – | 200.0 | 200.0 |
| 39" | | – | 200.0 | 200.0 |
| 42" | | – | 200.0 | 200.0 |
| 45" | | – | 193.2 | 200.0 |
| 48" | | – | 181.2 | 200.0 |
| 51" | | – | 170.5 | 200.0 |
| 54" | | – | 161.0 | 189.8 |
| 57" | | – | 152.6 | 179.8 |
| 60" | | – | 144.9 | 170.8 |
| 63" | | – | 138.0 | 162.7 |
| 66" | | – | 131.8 | 155.3 |
| 69" | | – | 126.0 | 148.6 |
| 72" | | – | 120.8 | 142.4 |
| 36" | 132" | – | 200.0 | 200.0 |
| 39" | | – | 193.9 | 200.0 |
| 42" | | – | 180.1 | 200.0 |
| 45" | | – | 168.1 | 200.0 |
| 48" | | – | 157.6 | 194.6 |
| 51" | | – | 148.3 | 183.1 |
| 54" | | – | 140.1 | 173.0 |
| 57" | | – | 132.7 | 163.9 |
| 60" | | – | 126.0 | 155.7 |
| 63" | | – | 120.0 | 148.3 |
| 66" | | – | 114.6 | 141.5 |
| 69" | | – | 109.6 | 135.4 |
| 72" | | – | 105.0 | 129.7 |
| 36" | 138" | – | 183.9 | 200.0 |
| 39" | | – | 169.7 | 200.0 |
| 42" | | – | 157.6 | 200.0 |
| 45" | | – | 147.1 | 189.9 |
| 48" | | – | 137.9 | 178.0 |
| 51" | | – | 129.8 | 167.6 |
| 54" | | – | 122.6 | 158.3 |
| 57" | | – | 116.1 | 149.9 |
| 60" | | – | 110.3 | 142.4 |
| 63" | | – | 105.1 | 135.6 |
| 66" | | – | 100.3 | 129.5 |
| 69" | | – | 95.9 | 123.9 |
| 72" | | – | 91.9 | 118.7 |

## MULLION LOAD CAPACITY – PSF
SINGLE SPANS (WITH OR WITHOUT INTERMEDIATE HORIZONTALS)

| NOMINAL DIMS. | | UNREINFORCED | ALUM REINF. | STEEL REINF. |
|---|---|---|---|---|
| WIDTH (W) | FRAME HEIGHT | EXT.(+) & INT.(–) | EXT.(+) & INT.(–) | EXT.(+) & INT.(–) |
| 36" | 144" | – | 161.8 | 200.0 |
| 39" | | – | 149.4 | 200.0 |
| 42" | | – | 138.7 | 186.9 |
| 45" | | – | 129.5 | 174.4 |
| 48" | | – | 121.4 | 163.5 |
| 51" | | – | 114.2 | 153.9 |
| 54" | | – | 107.9 | 145.3 |
| 57" | | – | 102.2 | 137.7 |
| 60" | | – | 97.1 | 130.8 |
| 63" | | – | 92.5 | 124.6 |
| 66" | | – | 88.3 | 118.9 |
| 69" | | – | 84.4 | 113.7 |
| 36" | 150" | – | 143.2 | 200.0 |
| 39" | | – | 132.2 | 185.5 |
| 42" | | – | 122.7 | 172.2 |
| 45" | | – | 114.5 | 160.7 |
| 48" | | – | 107.4 | 150.7 |
| 51" | | – | 101.1 | 141.8 |
| 54" | | – | 95.4 | 133.9 |
| 57" | | – | 90.4 | 126.9 |
| 60" | | – | 85.9 | 120.6 |
| 63" | | – | 81.8 | 114.8 |
| 66" | | – | 78.1 | 109.6 |
| 36" | 156" | – | 127.3 | 185.8 |
| 39" | | – | 117.5 | 171.5 |
| 42" | | – | 109.1 | 159.2 |
| 45" | | – | 101.8 | 148.6 |
| 48" | | – | 95.5 | 139.3 |
| 51" | | – | 89.8 | 131.1 |
| 54" | | – | 84.8 | 123.8 |
| 57" | | – | 80.4 | 117.3 |
| 60" | | – | 76.4 | 111.5 |
| 63" | | – | 72.7 | 106.1 |
| 36" | 162" | – | 113.6 | 172.3 |
| 39" | | – | 104.9 | 159.0 |
| 42" | | – | 97.4 | 147.6 |
| 45" | | – | 90.9 | 137.8 |
| 48" | | – | 85.2 | 129.2 |
| 51" | | – | 80.2 | 121.6 |
| 54" | | – | 75.8 | 114.8 |
| 57" | | – | 71.8 | 108.8 |
| 60" | | – | 68.2 | 103.4 |
| 36" | 168" | – | 101.9 | 160.2 |
| 39" | | – | 94.1 | 147.9 |
| 42" | | – | 87.3 | 137.3 |
| 45" | | – | 81.5 | 128.1 |
| 48" | | – | 76.4 | 120.1 |
| 51" | | – | 71.9 | 113.1 |
| 54" | | – | 67.9 | 106.8 |
| 57" | | – | 64.4 | 101.2 |
| 60" | | – | 61.1 | 96.1 |

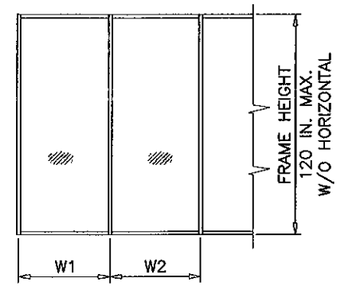


WIDTH (W) = W1
AT FRAME JAMB

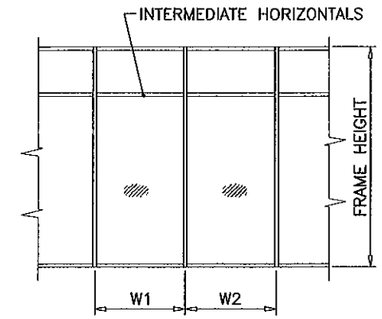


WIDTH (W) = $\frac{W1 + W2}{2}$
AT FRAME MULLION

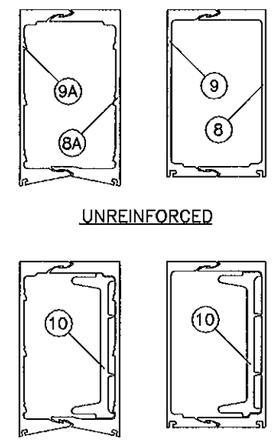


UNREINFORCED

ALUM REINF.
L = MULL LENGTH – 4"

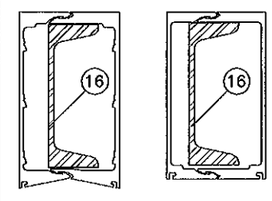


STEEL REINF.
L = MULL LENGTH – 6"

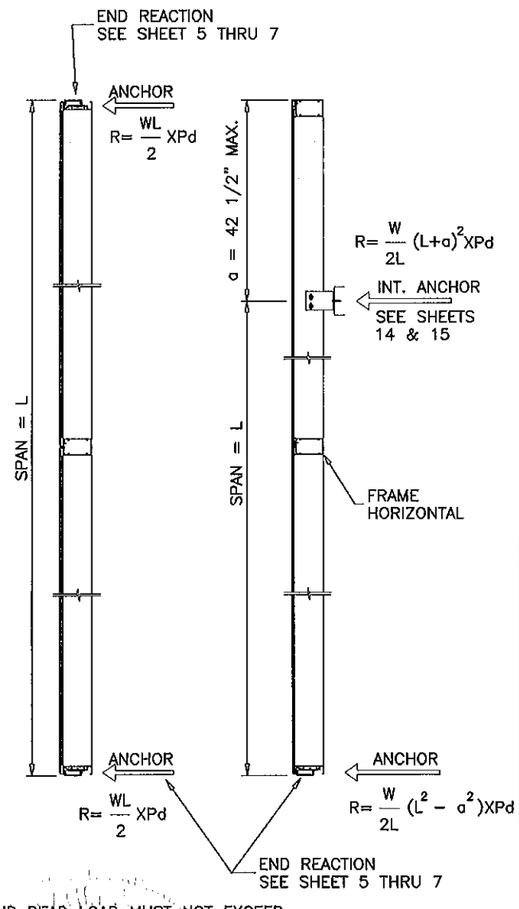


INTERMEDIATE ANCHOR WIND AND DEAD LOAD MUST NOT EXCEED INTERMEDIATE ANCHOR CAPACITY PER SHEETS 14 & 15.

Engr: JAVAD AHMAD
CIVIL
FLA. PE # 70592
C.A.N. 3538
FEB 15 2012

PRODUCT REVISED
in complying with the Florida Building Code
Acceptance No. 12-0223.36
Expiration Date 9/14/16
Miami Dade Product Control


AL-FAROOQ CORPORATION
ENGINEERS & PRODUCT DEVELOPMENT
1235 S.W. 87 AVE
MIAMI, FLORIDA 33174
TEL (305) 264-8100 FAX. (305) 262-6978
STORE\W04-105CTC

PRO-TECH 7SG ALUM CURTAIN WALL SYSTEM (N.I.)
CRAWFORD TRACEY CORPORATION
3301 SW 13TH DRIVE
DEERFIELD BEACH, FL. 33442-8101
TEL (954) 698-6888 FAX. (954) 698-6889


revisions:

| no | date | by | description |
|---|---|---|---|
| E | 08.19.08 | | NO CHANGE THIS SHEET |
| F | 11.11.10 | | GENERAL REVISION |
| G | 03.02.11 | | REV. PER BCCO COMMENTS |
| H | 05.10.11 | | NO CHANGE THIS SHEET |
| I | 01.16.12 | | NO CHANGE THIS SHEET |

date: 12-30-04
scale: 3/8"=1'-0"
dr. by: HAMID
chk. by:

drawing no.
W04-105

## MULLION LOAD CAPACITY – PSF
## MULTIPLE SPANS

| AVG. MULL SPACING | SPAN = L | UNREINFORCED EXT.(+)/INT.(−) | ALUM REINF. EXT.(+)/INT.(−) |
|---|---|---|---|
| 36" | 120" | 194.5 | 200.0 |
| 42" | | 166.7 | 192.0 |
| 48" | | 145.8 | 168.0 |
| 54" | | 129.6 | 149.0 |
| 60" | | 116.7 | 134.0 |
| 66" | | 106.1 | 122.0 |
| 72" | | 97.2 | 112.0 |
| 36" | 126" | 183.5 | 200.0 |
| 42" | | 157.3 | 183.0 |
| 48" | | 137.6 | 160.0 |
| 54" | | 122.3 | 142.0 |
| 60" | | 110.1 | 128.0 |
| 66" | | 100.1 | 116.0 |
| 72" | | 91.7 | 107.0 |
| 36" | 132" | 174.0 | 200.0 |
| 42" | | 149.1 | 175.0 |
| 48" | | 130.5 | 153.0 |
| 54" | | 116.0 | 136.0 |
| 60" | | 104.4 | 122.0 |
| 66" | | 94.9 | 111.0 |
| 72" | | 87.0 | 102.0 |
| 36" | 138" | 165.5 | 195.0 |
| 42" | | 141.9 | 167.0 |
| 48" | | 124.1 | 146.0 |
| 54" | | 110.3 | 130.0 |
| 60" | | 99.3 | 117.0 |
| 66" | | 90.3 | 106.0 |
| 72" | | 82.8 | 97.0 |
| 36" | 144" | 157.8 | 187.0 |
| 42" | | 135.3 | 160.0 |
| 48" | | 118.4 | 140.0 |
| 54" | | 105.2 | 124.0 |
| 60" | | 94.7 | 112.0 |
| 66" | | 86.1 | 102.0 |
| 36" | 150" | 150.9 | 179.0 |
| 42" | | 129.3 | 154.0 |
| 48" | | 113.2 | 134.0 |
| 54" | | 100.6 | 119.0 |
| 60" | | 90.5 | 108.0 |
| 66" | | 82.3 | 98.0 |
| 36" | 156" | 144.5 | 172.0 |
| 42" | | 123.9 | 148.0 |
| 48" | | 108.4 | 129.0 |
| 54" | | 96.3 | 115.0 |
| 60" | | 86.7 | 103.0 |
| 36" | 162" | 138.7 | 166.0 |
| 42" | | 118.9 | 142.0 |
| 48" | | 104.0 | 124.0 |
| 54" | | 92.5 | 111.0 |
| 60" | | 83.2 | 100.0 |
| 36" | 168" | 132.5 | 160.0 |
| 42" | | 113.6 | 137.0 |
| 48" | | 99.4 | 120.0 |
| 54" | | 88.4 | 107.0 |
| 60" | | 79.5 | 96.0 |

INTERMEDIATE ANCHOR WIND AND DEAD LOAD MUST NOT EXCEED INTERMEDIATE ANCHOR CAPACITY PER SHEETS 14 & 15.

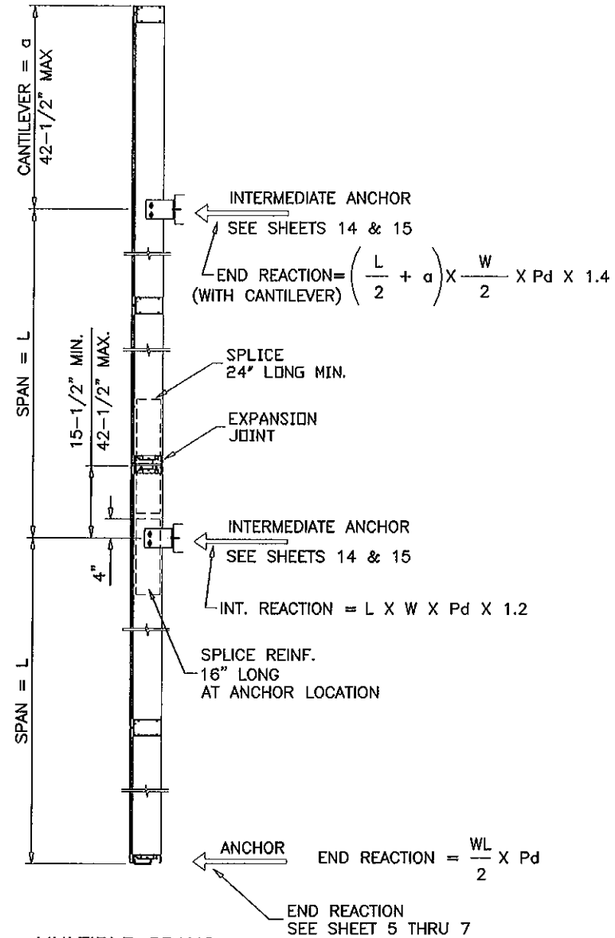


MULTIPLE SPANS

MULTIPLE SPANS WITH OR WITHOUT CANTILEVER
USE TABLE ON THIS SHEET.

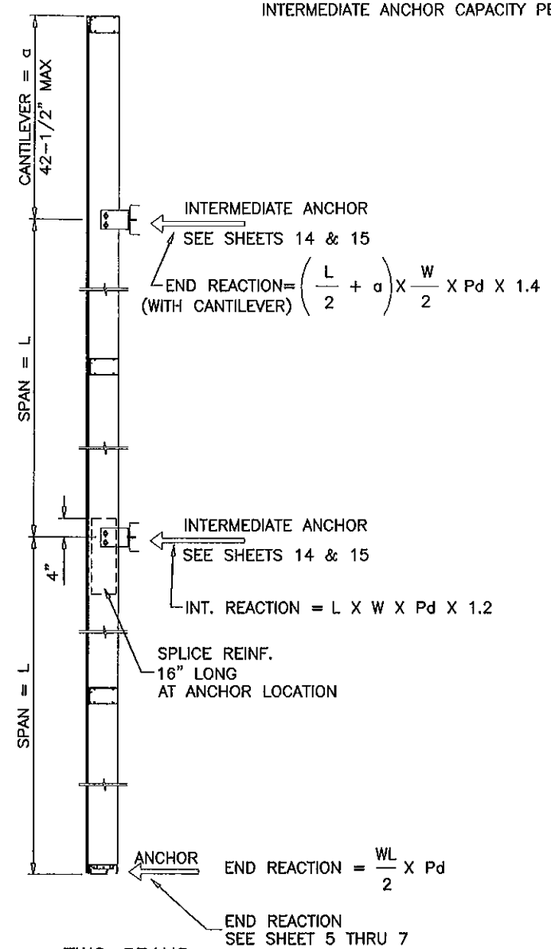


TWO SPANS

TWO SPANS WITH CANTILEVER
AND WITHOUT SPLICE/EXPANSION JOINT
USE TABLE ON THIS SHEET.

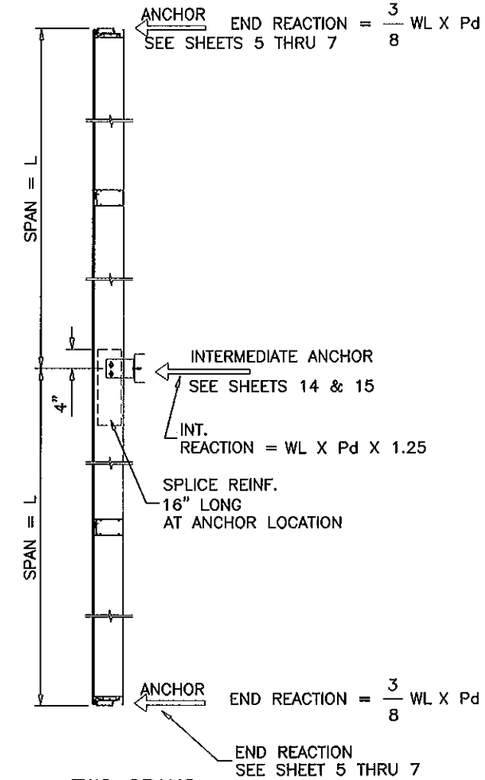


TWO SPANS

TWO SPANS WITHOUT CANTILEVER
AND WITHOUT SPLICE/EXPANSION JOINT
USE TABLE ON THIS SHEET.

UNEQUAL SPANS TO BE CHECKED ON JOB TO JOB BASIS

END REACTIONS MAY CHANGE WITH LOCATION OF
EXPANSION JOINT AND LENGTH OF CANTILEVER
WORST CONDITION SHOWN.

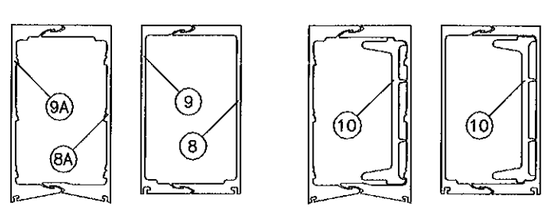


UNREINFORCED

ALUM REINF.
L = MULL LENGTH – 4"

PRODUCT REVISED
to complying with the Florida
Building Code
Acceptance No. 12-0223.36
Expiration Date 9/14/16
By Ishwar J. Chauhan
Miami-Dade Product Control

NOTE:
TWO SPANS CONTINUOUS MULLION WITHOUT
OVERHANG CAN BE INSTALLED.
FOR EACH SPAN USE TABLE ON THIS SHEET.

Engr: JAVAD AHMAD
CIVIL
FLA. PE # 70592
C.A.N. 3538
FEB 15 2012


AL-FAROOQ CORPORATION
ENGINEERS & PRODUCT DEVELOPMENT
1235 S.W. 87 AVE
MIAMI, FLORIDA 33174
TEL (305) 264-8100 FAX. (305) 262-6978


STORE\W04-105CTC

PRO-TECH 7SG ALUM CURTAIN WALL SYSTEM (N.I.)

CRAWFORD TRACEY CORPORATION
3301 SW 13TH DRIVE
DEERFIELD BEACH, FL. 33442-8101
TEL. (954) 698-6888 FAX. (954) 698-6889

revisions:

| no | date | by | description |
|---|---|---|---|
| E | 08.19.08 | | NO CHANGE THIS SHEET |
| F | 11.11.10 | | GENERAL REVISION |
| G | 03.02.11 | | REV. PER BCCO COMMENTS |
| H | 05.10.11 | | REV. PER BNC COMMENTS |
| I | 01.16.12 | | NO CHANGE THIS SHEET |

date: 12-30-04
scale: 3/8"=1'-0"
dr. by: HAMID
chk. by:

drawing no.
W04-105

| GLASS LOAD CAPACITY – PSF | | | | | |
|---|---|---|---|---|---|
| NOMINAL DIMS. | | GLASS TYPE 'A' | | GLASS TYPE 'A1' | |
| D.L.O. WIDTH | D.L.O. HEIGHT | EXT.(+) | INT.(–) | EXT.(+) | INT.(–) |
| 42" | 54" | 120.0 | 189.9 | 120.0 | 189.9 |
| 45" | | 120.0 | 178.1 | 120.0 | 178.1 |
| 48" | | 120.0 | 167.8 | 120.0 | 167.8 |
| 51" | | 120.0 | 158.5 | 120.0 | 158.5 |
| 54" | | 120.0 | 150.3 | 120.0 | 150.3 |
| 57" | | 120.0 | 142.8 | 120.0 | 142.8 |
| 60" | | 120.0 | 136.1 | 120.0 | 136.1 |
| 63" | | 120.0 | 129.9 | 120.0 | 129.9 |
| 66" | | 120.0 | 124.3 | 120.0 | 124.3 |
| 69" | | 119.2 | 119.2 | 119.2 | 119.2 |
| 72" | | 114.4 | 114.4 | 114.4 | 114.4 |
| 42" | 60" | 120.0 | 189.9 | 120.0 | 189.9 |
| 45" | | 120.0 | 178.1 | 120.0 | 178.1 |
| 48" | | 120.0 | 167.8 | 120.0 | 167.8 |
| 51" | | 120.0 | 158.5 | 120.0 | 158.5 |
| 54" | | 120.0 | 150.3 | 120.0 | 150.3 |
| 57" | | 120.0 | 142.8 | 120.0 | 142.8 |
| 60" | | 120.0 | 136.1 | 120.0 | 136.1 |
| 63" | | 120.0 | 129.9 | 120.0 | 129.9 |
| 66" | | 120.0 | 124.3 | 120.0 | 124.3 |
| 69" | | 119.2 | 119.2 | 119.2 | 119.2 |
| 72" | | 114.4 | 114.4 | 114.4 | 114.4 |
| 42" | 66" | 120.0 | 189.9 | 120.0 | 189.9 |
| 45" | | 120.0 | 178.1 | 120.0 | 178.1 |
| 48" | | 120.0 | 167.8 | 120.0 | 167.8 |
| 51" | | 120.0 | 158.5 | 120.0 | 158.5 |
| 54" | | 120.0 | 150.3 | 120.0 | 150.3 |
| 57" | | 120.0 | 142.8 | 120.0 | 142.8 |
| 60" | | 120.0 | 136.1 | 120.0 | 136.1 |
| 63" | | 120.0 | 129.9 | 120.0 | 129.9 |
| 66" | | 120.0 | 124.3 | 120.0 | 124.3 |
| 69" | | 119.2 | 119.2 | 119.2 | 119.2 |
| 72" | | 114.4 | 114.4 | 114.4 | 114.4 |
| 42" | 72" | 120.0 | 170.5 | 120.0 | 189.9 |
| 45" | | 120.0 | 167.4 | 120.0 | 178.1 |
| 48" | | 120.0 | 164.4 | 120.0 | 167.8 |
| 51" | | 120.0 | 158.5 | 120.0 | 158.5 |
| 54" | | 120.0 | 150.3 | 120.0 | 150.3 |
| 57" | | 120.0 | 142.8 | 120.0 | 142.8 |
| 60" | | 120.0 | 136.1 | 120.0 | 136.1 |
| 63" | | 120.0 | 129.9 | 120.0 | 129.9 |
| 66" | | 120.0 | 124.3 | 120.0 | 124.3 |
| 69" | | 119.2 | 119.2 | 119.2 | 119.2 |
| 72" | | 114.4 | 114.4 | 114.4 | 114.4 |

| GLASS LOAD CAPACITY – PSF | | | | | |
|---|---|---|---|---|---|
| NOMINAL DIMS. | | GLASS TYPE 'A' | | GLASS TYPE 'A1' | |
| D.L.O. WIDTH | D.L.O. HEIGHT | EXT.(+) | INT.(–) | EXT.(+) | INT.(–) |
| 42" | 78" | 120.0 | 153.1 | 120.0 | 189.9 |
| 45" | | 120.0 | 150.5 | 120.0 | 178.1 |
| 48" | | 120.0 | 148.5 | 120.0 | 167.8 |
| 51" | | 120.0 | 146.4 | 120.0 | 158.5 |
| 54" | | 120.0 | 143.9 | 120.0 | 150.3 |
| 57" | | 120.0 | 140.8 | 120.0 | 142.8 |
| 60" | | 120.0 | 136.1 | 120.0 | 136.1 |
| 63" | | 120.0 | 129.9 | 120.0 | 129.9 |
| 66" | | 120.0 | 124.3 | 120.0 | 124.3 |
| 69" | | 119.2 | 119.2 | 119.2 | 119.2 |
| 72" | | 114.4 | 114.4 | 114.4 | 114.4 |
| 42" | 84" | 120.0 | 138.8 | 120.0 | 189.9 |
| 45" | | 120.0 | 136.2 | 120.0 | 178.1 |
| 48" | | 120.0 | 134.7 | 120.0 | 167.8 |
| 51" | | 120.0 | 133.6 | 120.0 | 158.5 |
| 54" | | 120.0 | 132.1 | 120.0 | 150.3 |
| 57" | | 120.0 | 130.0 | 120.0 | 142.8 |
| 60" | | 120.0 | 127.5 | 120.0 | 136.1 |
| 63" | | 120.0 | 124.4 | 120.0 | 129.9 |
| 66" | | 120.0 | 121.3 | 120.0 | 124.3 |
| 69" | | 117.8 | 117.8 | 119.2 | 119.2 |
| 72" | | 114.2 | 114.2 | 114.4 | 114.4 |
| 42" | 90" | 120.0 | 127.0 | 120.0 | 189.9 |
| 45" | | 120.0 | 124.4 | 120.0 | 178.1 |
| 48" | | 120.0 | 122.9 | 120.0 | 167.8 |
| 51" | | 120.0 | 121.9 | 120.0 | 158.5 |
| 54" | | 120.0 | 120.8 | 120.0 | 150.3 |
| 57" | | 119.8 | 119.8 | 120.0 | 142.8 |
| 60" | | 117.8 | 117.8 | 120.0 | 136.1 |
| 63" | | 115.7 | 115.7 | 120.0 | 129.9 |
| 66" | | 113.7 | 113.7 | 120.0 | 124.3 |
| 69" | | 110.6 | 110.6 | 119.2 | 119.2 |
| 72" | | 108.0 | 108.0 | 114.4 | 114.4 |
| 42" | 96" | 117.8 | 117.8 | 120.0 | 189.9 |
| 45" | | 114.2 | 114.2 | 120.0 | 178.1 |
| 48" | | 112.6 | 112.6 | 120.0 | 167.8 |
| 51" | | 111.6 | 111.6 | 120.0 | 158.5 |
| 54" | | 111.1 | 111.1 | 120.0 | 150.3 |
| 57" | | 110.1 | 110.1 | 120.0 | 142.8 |
| 60" | | 109.1 | 109.1 | 120.0 | 136.1 |
| 63" | | 108.0 | 108.0 | 120.0 | 129.9 |
| 66" | | 106.0 | 106.0 | 120.0 | 124.3 |
| 42" | 102" | 110.6 | 110.6 | 120.0 | 189.9 |
| 45" | | 106.0 | 106.0 | 120.0 | 178.1 |
| 48" | | 103.9 | 103.9 | 120.0 | 167.8 |
| 51" | | 102.9 | 102.9 | 120.0 | 158.5 |
| 54" | | 102.4 | 102.4 | 120.0 | 150.3 |
| 57" | | 101.9 | 101.9 | 120.0 | 142.8 |
| 60" | | 101.4 | 101.4 | 120.0 | 136.1 |
| 63" | | 100.4 | 100.4 | 120.0 | 129.9 |

| GLASS LOAD CAPACITY – PSF | | | | | |
|---|---|---|---|---|---|
| NOMINAL DIMS. | | GLASS TYPE 'A' | | GLASS TYPE 'A1' | |
| D.L.O. WIDTH | D.L.O. HEIGHT | EXT.(+) | INT.(–) | EXT.(+) | INT.(–) |
| 42" | 108" | 104.4 | 104.4 | 120.0 | 189.9 |
| 45" | | 99.3 | 99.3 | 120.0 | 178.1 |
| 48" | | 96.8 | 96.8 | 120.0 | 167.8 |
| 51" | | 95.2 | 95.2 | 120.0 | 158.5 |
| 54" | | 94.7 | 94.7 | 120.0 | 150.3 |
| 57" | | 94.2 | 94.2 | 120.0 | 142.8 |
| 60" | | 94.2 | 94.2 | 120.0 | 136.1 |
| 42" | 114" | 100.4 | 100.4 | 120.0 | 180.0 |
| 45" | | 94.2 | 94.2 | 120.0 | 172.0 |
| 48" | | 90.6 | 90.6 | 120.0 | 167.8 |
| 51" | | 88.6 | 88.6 | 120.0 | 158.5 |
| 54" | | 88.1 | 88.1 | 120.0 | 150.3 |
| 57" | | 87.6 | 87.6 | 120.0 | 142.8 |
| 42" | 120" | 96.8 | 96.8 | 120.0 | 173.0 |
| 45" | | 90.1 | 90.1 | 120.0 | 163.0 |
| 48" | | 86.0 | 86.0 | 120.0 | 156.0 |
| 51" | | 83.5 | 83.5 | 120.0 | 156.0 |
| 54" | | 82.4 | 82.4 | 120.0 | 150.3 |
| 42" | 126" | 94.2 | 94.2 | 120.0 | 166.0 |
| 45" | | 86.5 | 86.5 | 120.0 | 154.0 |
| 48" | | 81.9 | 81.9 | 120.0 | 148.0 |
| 51" | | 78.8 | 78.8 | 120.0 | 146.0 |
| 42" | 132" | 91.6 | 91.6 | 120.0 | 161.0 |
| 45" | | 84.0 | 84.0 | 120.0 | 148.0 |
| 48" | | 78.8 | 78.8 | 120.0 | 141.0 |
| 42" | 138" | 89.6 | 89.6 | 120.0 | 155.0 |
| 45" | | 81.9 | 81.9 | 120.0 | 143.0 |
| 42" | 144" | 88.1 | 88.1 | 120.0 | 151.0 |
| 45" | | 79.9 | 79.9 | 120.0 | 139.0 |
| 42" | 150" | 86.5 | 86.5 | 120.0 | 148.0 |
| 56-1/2" | 116" | 85.5 | 85.5 | 120.0 | 144.0 |

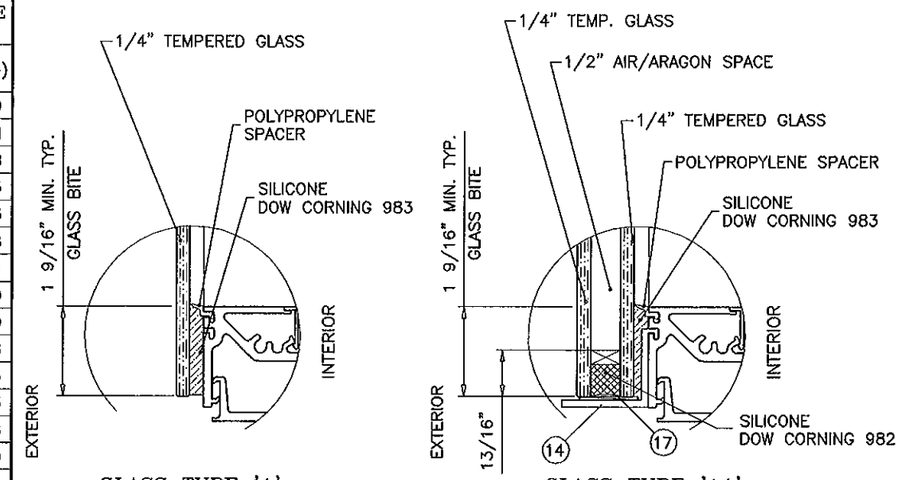


GLAZING OPTIONS

NOTE:
OPTION OF .019" CERAMIC FRIT ON ROOM SIDE SURFACE OF INNER PANE GLASS.
MAX. GLASS AREA LIMITED TO 22.2 SQ. FT. WITH ASPECT RATIO EQUAL OR LESS THAN 5.

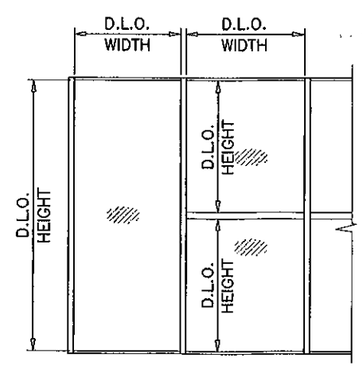


NOTE:
GLASS CAPACITIES ON THIS SHEET ARE BASED ON ASTM E1300-04 (3 SEC. GUSTS).

PRODUCT REVISED
In complying with the Florida Building Code
Acceptance No. 12-0223.36
Expiration Date 5/14/2016
By Ishaq I. Llanos
Miami Dade Product Control

Engr: JAVAD AHMAD
CIVIL
FLA. PE # 70592
C.A.N. 3538
FEB 15 2012


AL-FAROOQ CORPORATION
ENGINEERS & PRODUCT DEVELOPMENT
1235 S.W. 87 AVE
MIAMI, FLORIDA 33174
TEL. (305) 264-8100 FAX. (305) 262-6978


STORE\W04-105CTC

PRO-TECH 7SG ALUM CURTAIN WALL SYSTEM (N.I.)

CRAWFORD TRACEY CORPORATION
3301 SW 13TH DRIVE
DEERFIELD BEACH, FL. 33442-8101
TEL. (954) 698-6888 FAX. (954) 698-6889

revisions:

| no | date | by | description |
|---|---|---|---|
| E | 08.19.08 | | REV. PER BCCO COMMENTS |
| F | 11.11.10 | | GENERAL REVISION |
| G | 03.02.11 | | REV. PER BCCO COMMENTS |
| H | 05.10.11 | | REV. PER BNC COMMENTS |
| I | 01.16.12 | | NO CHANGE THIS SHEET |

date: 12-30-04
scale: 3/8" = 1"
dr. by: HAMID
chk. by:

drawing no.
W04-105

sheet 4 of 17

ANCHOR LOAD CAPACITY - PSF
EXT.(+) & INT.(-)

| NOMINAL DIMS. | | ANCHORS TYPE 'A' | | | | ANCHORS TYPE 'B' | | | |
|---|---|---|---|---|---|---|---|---|---|
| WIDTH (W) | FRAME HEIGHT | A2 | A3 | A4 | A5 | B2 | B3 | B4 | B5 |
| 36" | 120" | 84.8 | 127.2 | 150.3 | 200.0 | 96.0 | 144.0 | 192.0 | 200.0 |
| 39" | | 78.3 | 117.4 | 138.7 | 195.7 | 88.6 | 132.9 | 177.2 | 200.0 |
| 42" | | 72.7 | 109.0 | 128.8 | 181.7 | 82.3 | 123.4 | 164.6 | 200.0 |
| 45" | | 67.8 | 101.8 | 120.2 | 169.6 | 76.8 | 115.2 | 153.6 | 192.0 |
| 48" | | 63.6 | 95.4 | 112.7 | 159.0 | 72.0 | 108.0 | 144.0 | 180.0 |
| 51" | | 59.9 | 89.8 | 106.1 | 149.6 | 67.8 | 101.6 | 135.5 | 169.4 |
| 54" | | 56.5 | 84.8 | 100.2 | 141.3 | 64.0 | 96.0 | 128.0 | 160.0 |
| 57" | | 53.6 | 80.3 | 94.9 | 133.9 | 60.6 | 90.9 | 121.3 | 151.6 |
| 60" | | 50.9 | 76.3 | 90.2 | 127.2 | 57.6 | 86.4 | 115.2 | 144.0 |
| 63" | | 48.5 | 72.7 | 85.9 | 121.1 | 54.9 | 82.3 | 109.7 | 137.1 |
| 66" | | 46.3 | 69.4 | 82.0 | 115.6 | 52.4 | 78.5 | 104.7 | 130.9 |
| 69" | | 44.2 | 66.4 | 78.4 | 110.6 | 50.1 | 75.1 | 100.2 | 125.2 |
| 72" | | 42.4 | 63.6 | 75.1 | 106.0 | 48.0 | 72.0 | 96.0 | 120.0 |
| 36" | 126" | 80.8 | 121.1 | 143.1 | 200.0 | 91.4 | 137.1 | 182.9 | 200.0 |
| 39" | | 74.5 | 111.8 | 132.1 | 186.4 | 84.4 | 126.6 | 168.8 | 200.0 |
| 42" | | 69.2 | 103.8 | 122.7 | 173.1 | 78.4 | 117.6 | 156.7 | 195.9 |
| 45" | | 64.6 | 96.9 | 114.5 | 161.5 | 73.1 | 109.7 | 146.3 | 182.9 |
| 48" | | 60.6 | 90.9 | 107.3 | 151.4 | 68.6 | 102.9 | 137.1 | 171.4 |
| 51" | | 57.0 | 85.5 | 101.0 | 142.5 | 64.5 | 96.8 | 129.1 | 161.3 |
| 54" | | 53.8 | 80.8 | 95.4 | 134.6 | 61.0 | 91.4 | 121.9 | 152.4 |
| 57" | | 51.0 | 76.5 | 90.4 | 127.5 | 57.7 | 86.6 | 115.5 | 144.4 |
| 60" | | 48.5 | 72.7 | 85.9 | 121.1 | 54.9 | 82.3 | 109.7 | 137.1 |
| 63" | | 46.1 | 69.2 | 81.8 | 115.4 | 52.2 | 78.4 | 104.5 | 130.6 |
| 66" | | 44.1 | 66.1 | 78.1 | 110.1 | 49.9 | 74.8 | 99.7 | 124.7 |
| 69" | | 42.1 | 63.2 | 74.7 | 105.3 | 47.7 | 71.6 | 95.4 | 119.3 |
| 72" | | 40.4 | 60.6 | 71.6 | 101.0 | 45.7 | 68.6 | 91.4 | 114.3 |
| 36" | 132" | 77.1 | 115.6 | 136.6 | 192.7 | 87.3 | 130.9 | 174.5 | 200.0 |
| 39" | | 71.2 | 106.7 | 126.1 | 177.9 | 80.6 | 120.8 | 161.1 | 200.0 |
| 42" | | 66.1 | 99.1 | 117.1 | 165.2 | 74.8 | 112.2 | 149.6 | 187.0 |
| 45" | | 61.7 | 92.5 | 109.3 | 154.2 | 69.8 | 104.7 | 139.6 | 174.5 |
| 48" | | 57.8 | 86.7 | 102.5 | 144.5 | 65.5 | 98.2 | 130.9 | 163.6 |
| 51" | | 54.4 | 81.6 | 96.4 | 136.0 | 61.6 | 92.4 | 123.2 | 154.0 |
| 54" | | 51.4 | 77.1 | 91.1 | 128.5 | 58.2 | 87.3 | 116.4 | 145.5 |
| 57" | | 48.7 | 73.0 | 86.3 | 121.7 | 55.1 | 82.7 | 110.2 | 137.8 |
| 60" | | 46.3 | 69.4 | 82.0 | 115.6 | 52.4 | 78.5 | 104.7 | 130.9 |
| 63" | | 44.1 | 66.1 | 78.1 | 110.1 | 49.9 | 74.8 | 99.7 | 124.7 |
| 66" | | 42.0 | 63.1 | 74.5 | 105.1 | 47.6 | 71.4 | 95.2 | 119.0 |
| 69" | | 40.2 | 60.3 | 71.3 | 100.6 | 45.5 | 68.3 | 91.1 | 113.8 |
| 72" | | 38.5 | 57.8 | 68.3 | 96.4 | 43.6 | 65.5 | 87.3 | 109.1 |
| 36" | 138" | 73.7 | 110.6 | 130.7 | 184.3 | 83.5 | 125.2 | 167.0 | 200.0 |
| 39" | | 68.1 | 102.1 | 120.6 | 170.2 | 77.1 | 115.6 | 154.1 | 192.6 |
| 42" | | 63.2 | 94.8 | 112.0 | 158.0 | 71.6 | 107.3 | 143.1 | 178.9 |
| 45" | | 59.0 | 88.5 | 104.5 | 147.5 | 66.8 | 100.2 | 133.6 | 167.0 |
| 48" | | 55.3 | 83.0 | 98.0 | 138.3 | 62.6 | 93.9 | 125.2 | 156.5 |
| 51" | | 52.1 | 78.1 | 92.2 | 130.1 | 58.9 | 88.4 | 117.9 | 147.3 |
| 54" | | 49.2 | 73.7 | 87.1 | 122.9 | 55.7 | 83.5 | 111.3 | 139.1 |
| 57" | | 46.6 | 69.9 | 82.5 | 116.4 | 52.7 | 79.1 | 105.4 | 131.8 |
| 60" | | 44.2 | 66.4 | 78.4 | 110.6 | 50.1 | 75.1 | 100.2 | 125.2 |
| 63" | | 42.1 | 63.2 | 74.7 | 105.3 | 47.7 | 71.6 | 95.4 | 119.3 |
| 66" | | 40.2 | 60.3 | 71.3 | 100.6 | 45.5 | 68.3 | 91.1 | 113.8 |
| 69" | | 38.5 | 57.7 | 68.2 | 96.2 | 43.6 | 65.3 | 87.1 | 108.9 |
| 72" | | 36.9 | 55.3 | 65.3 | 92.2 | 41.7 | 62.6 | 83.5 | 104.3 |

ANCHOR LOAD CAPACITY - PSF
EXT.(+) & INT.(-)

| NOMINAL DIMS. | | ANCHORS TYPE 'A' | | | | ANCHORS TYPE 'B' | | | |
|---|---|---|---|---|---|---|---|---|---|
| WIDTH (W) | FRAME HEIGHT | A2 | A3 | A4 | A5 | B2 | B3 | B4 | B5 |
| 36" | 144" | 70.7 | 106.0 | 125.2 | 176.7 | 80.0 | 120.0 | 160.0 | 200.0 |
| 39" | | 65.2 | 97.8 | 115.6 | 163.1 | 73.8 | 110.8 | 147.7 | 184.6 |
| 42" | | 60.6 | 90.9 | 107.3 | 151.4 | 68.6 | 102.9 | 137.1 | 171.4 |
| 45" | | 56.5 | 84.8 | 100.2 | 141.3 | 64.0 | 96.0 | 128.0 | 160.0 |
| 48" | | 53.0 | 79.5 | 93.9 | 132.5 | 60.0 | 90.0 | 120.0 | 150.0 |
| 51" | | 49.9 | 74.8 | 88.4 | 124.7 | 56.5 | 84.7 | 112.9 | 141.2 |
| 54" | | 47.1 | 70.7 | 83.5 | 117.8 | 53.3 | 80.0 | 106.7 | 133.3 |
| 57" | | 44.6 | 66.9 | 79.1 | 111.6 | 50.5 | 75.8 | 101.1 | 126.3 |
| 60" | | 42.4 | 63.6 | 75.1 | 106.0 | 48.0 | 72.0 | 96.0 | 120.0 |
| 63" | | 40.4 | 60.6 | 71.6 | 101.0 | 45.7 | 68.6 | 91.4 | 114.3 |
| 66" | | 38.5 | 57.8 | 68.3 | 96.4 | 43.6 | 65.5 | 87.3 | 109.1 |
| 69" | | 36.9 | 55.3 | 65.3 | 92.2 | 41.7 | 62.6 | 83.5 | 104.3 |
| 36" | 150" | 67.8 | 101.8 | 120.2 | 169.6 | 76.8 | 115.2 | 153.6 | 192.0 |
| 39" | | 62.6 | 93.9 | 111.0 | 156.6 | 70.9 | 106.3 | 141.8 | 177.2 |
| 42" | | 58.1 | 87.2 | 103.0 | 145.4 | 65.8 | 98.7 | 131.7 | 164.6 |
| 45" | | 54.3 | 81.4 | 96.2 | 135.7 | 61.4 | 92.2 | 122.9 | 153.6 |
| 48" | | 50.9 | 76.3 | 90.2 | 127.2 | 57.6 | 86.4 | 115.2 | 144.0 |
| 51" | | 47.9 | 71.8 | 84.9 | 119.7 | 54.2 | 81.3 | 108.4 | 135.5 |
| 54" | | 45.2 | 67.8 | 80.1 | 113.1 | 51.2 | 76.8 | 102.4 | 128.0 |
| 57" | | 42.8 | 64.3 | 75.9 | 107.1 | 48.5 | 72.8 | 97.0 | 121.3 |
| 60" | | 40.7 | 61.1 | 72.1 | 101.8 | 46.1 | 69.1 | 92.2 | 115.2 |
| 63" | | 38.8 | 58.1 | 68.7 | 96.9 | 43.9 | 65.8 | 87.8 | 109.7 |
| 66" | | 37.0 | 55.5 | 65.6 | 92.5 | 41.9 | 62.8 | 83.8 | 104.7 |
| 36" | 156" | 65.2 | 97.8 | 115.6 | 163.1 | 73.8 | 110.8 | 147.7 | 184.6 |
| 39" | | 60.2 | 90.3 | 106.7 | 150.5 | 68.2 | 102.2 | 136.3 | 170.4 |
| 42" | | 55.9 | 83.9 | 99.1 | 139.8 | 63.3 | 94.9 | 126.6 | 158.2 |
| 45" | | 52.2 | 78.3 | 92.5 | 130.5 | 59.1 | 88.6 | 118.2 | 147.7 |
| 48" | | 48.9 | 73.4 | 86.7 | 122.3 | 55.4 | 83.1 | 110.8 | 138.5 |
| 51" | | 46.0 | 69.1 | 81.6 | 115.1 | 52.1 | 78.2 | 104.3 | 130.3 |
| 54" | | 43.5 | 65.2 | 77.1 | 108.7 | 49.2 | 73.8 | 98.5 | 123.1 |
| 57" | | 41.2 | 61.8 | 73.0 | 103.0 | 46.6 | 70.0 | 93.3 | 116.6 |
| 60" | | 39.1 | 58.7 | 69.4 | 97.8 | 44.3 | 66.5 | 88.6 | 110.8 |
| 63" | | 37.3 | 55.9 | 66.1 | 93.2 | 42.2 | 63.3 | 84.4 | 105.5 |
| 36" | 162" | 62.8 | 94.2 | 111.3 | 157.0 | 71.1 | 106.7 | 142.2 | 177.8 |
| 39" | | 58.0 | 87.0 | 102.7 | 145.0 | 65.6 | 98.5 | 131.3 | 164.1 |
| 42" | | 53.8 | 80.8 | 95.4 | 134.6 | 61.0 | 91.4 | 121.9 | 152.4 |
| 45" | | 50.3 | 75.4 | 89.0 | 125.6 | 56.9 | 85.3 | 113.8 | 142.2 |
| 48" | | 47.1 | 70.7 | 83.5 | 117.8 | 53.3 | 80.0 | 106.7 | 133.3 |
| 51" | | 44.3 | 66.5 | 78.6 | 110.8 | 50.2 | 75.3 | 100.4 | 125.5 |
| 54" | | 41.9 | 62.8 | 74.2 | 104.7 | 47.4 | 71.1 | 94.8 | 118.5 |
| 57" | | 39.7 | 59.5 | 70.3 | 99.2 | 44.9 | 67.4 | 89.8 | 112.3 |
| 60" | | 37.7 | 56.5 | 66.8 | 94.2 | 42.7 | 64.0 | 85.3 | 106.7 |
| 36" | 168" | 60.6 | 90.9 | 107.3 | 151.4 | 68.6 | 102.9 | 137.1 | 171.4 |
| 39" | | 55.9 | 83.9 | 99.1 | 139.8 | 63.3 | 94.9 | 126.6 | 158.2 |
| 42" | | 51.9 | 77.9 | 92.0 | 129.8 | 58.8 | 88.2 | 117.6 | 146.9 |
| 45" | | 48.5 | 72.7 | 85.9 | 121.1 | 54.9 | 82.3 | 109.7 | 137.1 |
| 48" | | 45.4 | 68.1 | 80.5 | 113.6 | 51.4 | 77.1 | 102.9 | 128.6 |
| 51" | | 42.8 | 64.1 | 75.8 | 106.9 | 48.4 | 72.6 | 96.8 | 121.0 |
| 54" | | 40.4 | 60.6 | 71.6 | 101.0 | 45.7 | 68.6 | 91.4 | 114.3 |
| 57" | | 38.3 | 57.4 | 67.8 | 95.6 | 43.3 | 65.0 | 86.6 | 108.3 |
| 60" | | 36.3 | 54.5 | 64.4 | 90.9 | 41.1 | 61.7 | 82.3 | 102.9 |

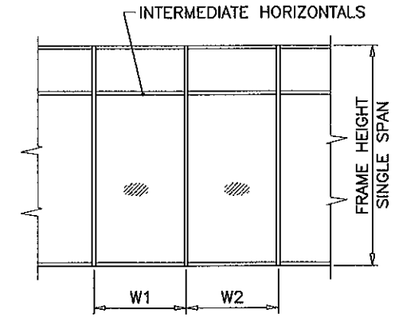


$$\text{WIDTH (W)} = \frac{W1 + W2}{2}$$

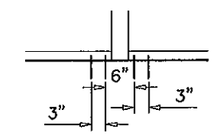


A2, B2,

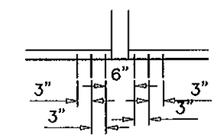


A3, B3,

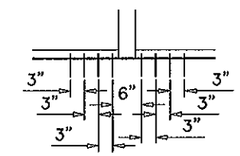


A4, B4,

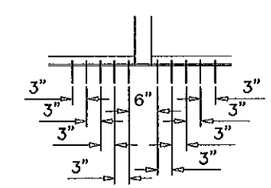


A5, B5,

ANCHORS TYPES A&B: SEE SHEET 9 FOR DESCRIPTION

A2 = (2) ANCHORS TYPE 'A' AT EACH SIDE OF MULLION
A3 = (3) ANCHORS TYPE 'A' AT EACH SIDE OF MULLION
A4 = (4) ANCHORS TYPE 'A' AT EACH SIDE OF MULLION
A5 = (5) ANCHORS TYPE 'A' AT EACH SIDE OF MULLION

B2 = (2) ANCHORS TYPE 'B' AT EACH SIDE OF MULLION
B3 = (3) ANCHORS TYPE 'B' AT EACH SIDE OF MULLION
B4 = (4) ANCHORS TYPE 'B' AT EACH SIDE OF MULLION
B5 = (5) ANCHORS TYPE 'B' AT EACH SIDE OF MULLION

ALL OTHER ANCHORS TO BE SPACED AS PER ELEVATION.

Engr: JAVAD AHMAD
CIVIL
FLA. PE # 70692
C.A.N. 3638

FEB 15 2012

PRODUCT REVISED
In complying with the Florida Building Code
Application No 12-0223.36
Expiration Date 9/14/12
By Ishaq I. Chanda
Miami Dade Product Control


AL-FAROOQ CORPORATION
ENGINEERS & PRODUCT DEVELOPMENT
1235 S.W. 87 AVE
MIAMI, FLORIDA 33174
TEL. (305) 264-8100 FAX. (305) 262-6978


STORE\W04-105CTC

PRO-TECH 7SG ALUM CURTAIN WALL SYSTEM (N.I.)

CRAWFORD TRACEY CORPORATION
3301 SW 13TH DRIVE
DEERFIELD BEACH, FL. 33442-8101
TEL. (954) 698-6888 FAX. (954) 698-6889

revisions:

| no | date | by | description |
|---|---|---|---|
| E | 08.19.08 | | NO CHANGE THIS SHEET |
| F | 11.11.10 | | GENERAL REVISION |
| G | 03.02.11 | | REV. PER BCCO COMMENTS |
| H | 05.10.11 | | NO CHANGE THIS SHEET |
| I | 01.16.12 | | NO CHANGE THIS SHEET |

date: 12-30-04
scale: 3/8"=1'-0"
dr. by: HAMID
chk. by:

drawing no.
W04-105

| ANCHOR LOAD CAPACITY – PSF EXT.(+) & INT.(–) | | | | | |
|---|---|---|---|---|---|
| NOMINAL DIMS. | | ANCHORS TYPE 'AA' | | | |
| WIDTH (W) | FRAME HEIGHT | AA33 | AA45 | AA66 | AA76 |
| 36" | 120" | 84.8 | 127.2 | 150.3 | 200.0 |
| 39" | | 78.3 | 117.4 | 138.7 | 195.7 |
| 42" | | 72.7 | 109.0 | 128.8 | 181.7 |
| 45" | | 67.8 | 101.8 | 120.2 | 169.6 |
| 48" | | 63.6 | 95.4 | 112.7 | 159.0 |
| 51" | | 59.9 | 89.8 | 106.1 | 149.6 |
| 54" | | 56.5 | 84.8 | 100.2 | 141.3 |
| 57" | | 53.6 | 80.3 | 94.9 | 133.9 |
| 60" | | 50.9 | 76.3 | 90.2 | 127.2 |
| 63" | | 48.5 | 72.7 | 85.9 | 121.1 |
| 66" | | 46.3 | 69.4 | 82.0 | 115.6 |
| 69" | | 44.2 | 66.4 | 78.4 | 110.6 |
| 72" | | 42.4 | 63.6 | 75.1 | 106.0 |
| 36" | 126" | 80.8 | 121.1 | 143.1 | 200.0 |
| 39" | | 74.5 | 111.8 | 132.1 | 186.4 |
| 42" | | 69.2 | 103.8 | 122.7 | 173.1 |
| 45" | | 64.6 | 96.9 | 114.5 | 161.5 |
| 48" | | 60.6 | 90.9 | 107.3 | 151.4 |
| 51" | | 57.0 | 85.5 | 101.0 | 142.5 |
| 54" | | 53.8 | 80.8 | 95.4 | 134.6 |
| 57" | | 51.0 | 76.5 | 90.4 | 127.5 |
| 60" | | 48.5 | 72.7 | 85.9 | 121.1 |
| 63" | | 46.1 | 69.2 | 81.8 | 115.4 |
| 66" | | 44.1 | 66.1 | 78.1 | 110.1 |
| 69" | | 42.1 | 63.2 | 74.7 | 105.3 |
| 72" | | 40.4 | 60.6 | 71.6 | 101.0 |
| 36" | 132" | 77.1 | 115.6 | 136.6 | 192.7 |
| 39" | | 71.2 | 106.7 | 126.1 | 177.9 |
| 42" | | 66.1 | 99.1 | 117.1 | 165.2 |
| 45" | | 61.7 | 92.5 | 109.3 | 154.2 |
| 48" | | 57.8 | 86.7 | 102.5 | 144.5 |
| 51" | | 54.4 | 81.6 | 96.4 | 136.0 |
| 54" | | 51.4 | 77.1 | 91.1 | 128.5 |
| 57" | | 48.7 | 73.0 | 86.3 | 121.7 |
| 60" | | 46.3 | 69.4 | 82.0 | 115.6 |
| 63" | | 44.1 | 66.1 | 78.1 | 110.1 |
| 66" | | 42.0 | 63.1 | 74.5 | 105.1 |
| 69" | | 40.2 | 60.3 | 71.3 | 100.6 |
| 72" | | 38.5 | 57.8 | 68.3 | 96.4 |
| 36" | 138" | 73.7 | 110.6 | 130.7 | 184.3 |
| 39" | | 68.1 | 102.1 | 120.6 | 170.2 |
| 42" | | 63.2 | 94.8 | 112.0 | 158.0 |
| 45" | | 59.0 | 88.5 | 104.5 | 147.5 |
| 48" | | 55.3 | 83.0 | 98.0 | 138.3 |
| 51" | | 52.1 | 78.1 | 92.2 | 130.1 |
| 54" | | 49.2 | 73.7 | 87.1 | 122.9 |
| 57" | | 46.6 | 69.9 | 82.5 | 116.4 |
| 60" | | 44.2 | 66.4 | 78.4 | 110.6 |
| 63" | | 42.1 | 63.2 | 74.7 | 105.3 |
| 66" | | 40.2 | 60.3 | 71.3 | 100.6 |
| 69" | | 38.5 | 57.7 | 68.2 | 96.2 |
| 72" | | 36.9 | 55.3 | 65.3 | 92.2 |

| ANCHOR LOAD CAPACITY – PSF EXT.(+) & INT.(–) | | | | | |
|---|---|---|---|---|---|
| NOMINAL DIMS. | | ANCHORS TYPE 'AA' | | | |
| WIDTH (W) | FRAME HEIGHT | AA33 | AA45 | AA66 | AA76 |
| 36" | 144" | 70.7 | 106.0 | 125.2 | 176.7 |
| 39" | | 65.2 | 97.8 | 115.6 | 163.1 |
| 42" | | 60.6 | 90.9 | 107.3 | 151.4 |
| 45" | | 56.5 | 84.8 | 100.2 | 141.3 |
| 48" | | 53.0 | 79.5 | 93.9 | 132.5 |
| 51" | | 49.9 | 74.8 | 88.4 | 124.7 |
| 54" | | 47.1 | 70.7 | 83.5 | 117.8 |
| 57" | | 44.6 | 66.9 | 79.1 | 111.6 |
| 60" | | 42.4 | 63.6 | 75.1 | 106.0 |
| 63" | | 40.4 | 60.6 | 71.6 | 101.0 |
| 66" | | 38.5 | 57.8 | 68.3 | 96.4 |
| 69" | | 36.9 | 55.3 | 65.3 | 92.2 |
| 36" | 150" | 67.8 | 101.8 | 120.2 | 169.6 |
| 39" | | 62.6 | 93.9 | 111.0 | 156.6 |
| 42" | | 58.1 | 87.2 | 103.0 | 145.4 |
| 45" | | 54.3 | 81.4 | 96.2 | 135.7 |
| 48" | | 50.9 | 76.3 | 90.2 | 127.2 |
| 51" | | 47.9 | 71.8 | 84.9 | 119.7 |
| 54" | | 45.2 | 67.8 | 80.1 | 113.1 |
| 57" | | 42.8 | 64.3 | 75.9 | 107.1 |
| 60" | | 40.7 | 61.1 | 72.1 | 101.8 |
| 63" | | 38.8 | 58.1 | 68.7 | 96.9 |
| 66" | | 37.0 | 55.5 | 65.6 | 92.5 |
| 36" | 156" | 65.2 | 97.8 | 115.6 | 163.1 |
| 39" | | 60.2 | 90.3 | 106.7 | 150.5 |
| 42" | | 55.9 | 83.9 | 99.1 | 139.8 |
| 45" | | 52.2 | 78.3 | 92.5 | 130.5 |
| 48" | | 48.9 | 73.4 | 86.7 | 122.3 |
| 51" | | 46.0 | 69.1 | 81.6 | 115.1 |
| 54" | | 43.5 | 65.2 | 77.1 | 108.7 |
| 57" | | 41.2 | 61.8 | 73.0 | 103.0 |
| 60" | | 39.1 | 58.7 | 69.4 | 97.8 |
| 63" | | 37.3 | 55.9 | 66.1 | 93.2 |
| 36" | 162" | 62.8 | 94.2 | 111.3 | 157.0 |
| 39" | | 58.0 | 87.0 | 102.7 | 145.0 |
| 42" | | 53.8 | 80.8 | 95.4 | 134.6 |
| 45" | | 50.3 | 75.4 | 89.0 | 125.6 |
| 48" | | 47.1 | 70.7 | 83.5 | 117.8 |
| 51" | | 44.3 | 66.5 | 78.6 | 110.8 |
| 54" | | 41.9 | 62.8 | 74.2 | 104.7 |
| 57" | | 39.7 | 59.5 | 70.3 | 99.2 |
| 60" | | 37.7 | 56.5 | 66.8 | 94.2 |
| 36" | 168" | 60.6 | 90.9 | 107.3 | 151.4 |
| 39" | | 55.9 | 83.9 | 99.1 | 139.8 |
| 42" | | 51.9 | 77.9 | 92.0 | 129.8 |
| 45" | | 48.5 | 72.7 | 85.9 | 121.1 |
| 48" | | 45.4 | 68.1 | 80.5 | 113.6 |
| 51" | | 42.8 | 64.1 | 75.8 | 106.9 |
| 54" | | 40.4 | 60.6 | 71.6 | 101.0 |
| 57" | | 38.3 | 57.4 | 67.8 | 95.6 |
| 60" | | 36.3 | 54.5 | 64.4 | 90.9 |

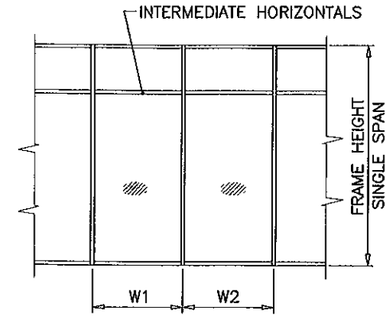


$$\text{WIDTH (W)} = \frac{W1 + W2}{2}$$

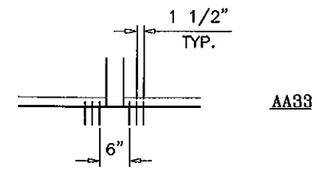


AA33

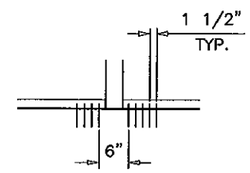


A45

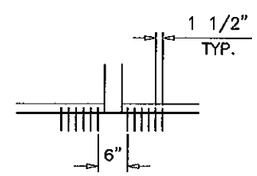


AA66

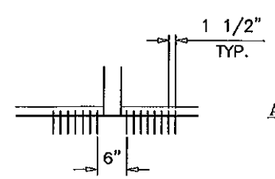


AA78

**PRODUCT REVISED**
**to complying with the Florida Building Code**
**Acceptance No.** 12-0223.36
**Expiration Date** 01.14.16
**By** Ishwar L. Chanda
**Miami Dade Product Control**

ANCHORS TYPES AA (INTO 2BY BUCKS): SEE SHEET 9 FOR DESCRIPTION

AA33= (6) ANCHORS TYPE 'AA' AT MULLION ENDS
AA45= (9) ANCHORS TYPE 'AA' AT MULLION ENDS
AA66= (12) ANCHORS TYPE 'AA' AT MULLION ENDS
AA78= (15) ANCHORS TYPE 'AA' AT MULLION ENDS

ALL OTHER ANCHORS TO BE SPACED AS PER ELEVATION.

Engr: JAVAD AHMAD
CIVIL
FOL. PE # 70592
C.A.N. 3538
FEB 13 2012


**AL-FAROOQ CORPORATION**
ENGINEERS & PRODUCT DEVELOPMENT
1235 S.W. 87 AVE
MIAMI, FLORIDA 33174
TEL. (305) 264-8100 FAX. (305) 262-6978


STORE\W04-105CTC

PRO-TECH 7SG ALUM CURTAIN WALL SYSTEM (N.L.)

**CRAWFORD TRACEY CORPORATION**
3301 SW 13TH DRIVE
DEERFIELD BEACH, FL. 33442-8101
TEL. (954) 698-6888 FAX. (954) 698-6889

revisions:

| no | date | by | description |
|---|---|---|---|
| E | 08.19.08 | | REV. PER BCCO COMMENTS |
| F | 11.11.10 | | GENERAL REVISION |
| G | 03.02.11 | | REV. PER BCCO COMMENTS |
| H | 05.10.11 | | NO CHANGE THIS SHEET |
| I | 01.16.12 | | NO CHANGE THIS SHEET |

date: 12-30-04
scale: 3/8"=1'-0"
dr. by: HAMID
chk. by:

drawing no.
W04-105

| ANCHOR LOAD CAPACITY - PSF EXT.(+) & INT.(−) | | | | | |
|---|---|---|---|---|---|
| NOMINAL DIMS. | | ANCHORS TYPE 'C' | | | |
| WIDTH (W) | FRAME HEIGHT | C2 | C3 | C4 | C5 |
| 36" | 120" | 133.3 | 200.0 | 200.0 | 200.0 |
| 39" | | 123.1 | 184.6 | 200.0 | 200.0 |
| 42" | | 114.3 | 171.4 | 200.0 | 200.0 |
| 45" | | 106.7 | 160.0 | 200.0 | 200.0 |
| 48" | | 100.0 | 150.0 | 200.0 | 200.0 |
| 51" | | 94.1 | 141.2 | 188.2 | 200.0 |
| 54" | | 88.9 | 133.3 | 177.8 | 200.0 |
| 57" | | 84.2 | 126.3 | 168.4 | 200.0 |
| 60" | | 80.0 | 120.0 | 160.0 | 200.0 |
| 63" | | 76.2 | 114.3 | 152.4 | 190.5 |
| 66" | | 72.7 | 109.1 | 145.5 | 181.8 |
| 69" | | 69.6 | 104.3 | 139.1 | 173.9 |
| 72" | | 66.7 | 100.0 | 133.3 | 166.7 |
| 36" | 126" | 127.0 | 190.5 | 200.0 | 200.0 |
| 39" | | 117.2 | 175.8 | 200.0 | 200.0 |
| 42" | | 108.8 | 163.3 | 200.0 | 200.0 |
| 45" | | 101.6 | 152.4 | 200.0 | 200.0 |
| 48" | | 95.2 | 142.9 | 190.5 | 200.0 |
| 51" | | 89.6 | 134.5 | 179.3 | 200.0 |
| 54" | | 84.7 | 127.0 | 169.3 | 200.0 |
| 57" | | 80.2 | 120.3 | 160.4 | 200.0 |
| 60" | | 76.2 | 114.3 | 152.4 | 190.5 |
| 63" | | 72.6 | 108.8 | 145.1 | 181.4 |
| 66" | | 69.3 | 103.9 | 138.5 | 173.2 |
| 69" | | 66.3 | 99.4 | 132.5 | 165.6 |
| 72" | | 63.5 | 95.2 | 127.0 | 158.7 |
| 36" | 132" | 121.2 | 181.8 | 200.0 | 200.0 |
| 39" | | 111.9 | 167.8 | 200.0 | 200.0 |
| 42" | | 103.9 | 155.8 | 200.0 | 200.0 |
| 45" | | 97.0 | 145.5 | 193.9 | 200.0 |
| 48" | | 90.9 | 136.4 | 181.8 | 200.0 |
| 51" | | 85.6 | 128.3 | 171.1 | 200.0 |
| 54" | | 80.8 | 121.2 | 161.6 | 200.0 |
| 57" | | 76.6 | 114.8 | 153.1 | 191.4 |
| 60" | | 72.7 | 109.1 | 145.5 | 181.8 |
| 63" | | 69.3 | 103.9 | 138.5 | 173.2 |
| 66" | | 66.1 | 99.2 | 132.2 | 165.3 |
| 69" | | 63.2 | 94.9 | 126.5 | 158.1 |
| 72" | | 60.6 | 90.9 | 121.2 | 151.5 |
| 36" | 138" | 115.9 | 173.9 | 200.0 | 200.0 |
| 39" | | 107.0 | 160.5 | 200.0 | 200.0 |
| 42" | | 99.4 | 149.1 | 198.8 | 200.0 |
| 45" | | 92.8 | 139.1 | 185.5 | 200.0 |
| 48" | | 87.0 | 130.4 | 173.9 | 200.0 |
| 51" | | 81.8 | 122.8 | 163.7 | 200.0 |
| 54" | | 77.3 | 115.9 | 154.6 | 193.2 |
| 57" | | 73.2 | 109.8 | 146.5 | 183.1 |
| 60" | | 69.6 | 104.3 | 139.1 | 173.9 |
| 63" | | 66.3 | 99.4 | 132.5 | 165.6 |
| 66" | | 63.2 | 94.9 | 126.5 | 158.1 |
| 69" | | 60.5 | 90.7 | 121.0 | 151.2 |
| 72" | | 58.0 | 87.0 | 115.9 | 144.9 |

| ANCHOR LOAD CAPACITY - PSF EXT.(+) & INT.(−) | | | | | |
|---|---|---|---|---|---|
| NOMINAL DIMS. | | ANCHORS TYPE 'C' | | | |
| WIDTH (W) | FRAME HEIGHT | C2 | C3 | C4 | C5 |
| 36" | 144" | 111.1 | 166.7 | 200.0 | 200.0 |
| 39" | | 102.6 | 153.8 | 200.0 | 200.0 |
| 42" | | 95.2 | 142.9 | 190.5 | 200.0 |
| 45" | | 88.9 | 133.3 | 177.8 | 200.0 |
| 48" | | 83.3 | 125.0 | 166.7 | 200.0 |
| 51" | | 78.4 | 117.6 | 156.9 | 196.1 |
| 54" | | 74.1 | 111.1 | 148.1 | 185.2 |
| 57" | | 70.2 | 105.3 | 140.4 | 175.4 |
| 60" | | 66.7 | 100.0 | 133.3 | 166.7 |
| 63" | | 63.5 | 95.2 | 127.0 | 158.7 |
| 66" | | 60.6 | 90.9 | 121.2 | 151.5 |
| 69" | | 58.0 | 87.0 | 115.9 | 144.9 |
| 36" | 150" | 106.7 | 160.0 | 200.0 | 200.0 |
| 39" | | 98.5 | 147.7 | 196.9 | 200.0 |
| 42" | | 91.4 | 137.1 | 182.9 | 200.0 |
| 45" | | 85.3 | 128.0 | 170.7 | 200.0 |
| 48" | | 80.0 | 120.0 | 160.0 | 200.0 |
| 51" | | 75.3 | 112.9 | 150.6 | 188.2 |
| 54" | | 71.1 | 106.7 | 142.2 | 177.8 |
| 57" | | 67.4 | 101.1 | 134.7 | 168.4 |
| 60" | | 64.0 | 96.0 | 128.0 | 160.0 |
| 63" | | 61.0 | 91.4 | 121.9 | 152.4 |
| 66" | | 58.2 | 87.3 | 116.4 | 145.5 |
| 36" | 156" | 102.6 | 153.8 | 200.0 | 200.0 |
| 39" | | 94.7 | 142.0 | 189.3 | 200.0 |
| 42" | | 87.9 | 131.9 | 175.8 | 200.0 |
| 45" | | 82.1 | 123.1 | 164.1 | 200.0 |
| 48" | | 76.9 | 115.4 | 153.8 | 192.3 |
| 51" | | 72.4 | 108.6 | 144.8 | 181.0 |
| 54" | | 68.4 | 102.6 | 136.8 | 170.9 |
| 57" | | 64.8 | 97.2 | 129.6 | 161.9 |
| 60" | | 61.5 | 92.3 | 123.1 | 153.8 |
| 63" | | 58.6 | 87.9 | 117.2 | 146.5 |
| 36" | 162" | 98.8 | 148.1 | 197.5 | 200.0 |
| 39" | | 91.2 | 136.8 | 182.3 | 200.0 |
| 42" | | 84.7 | 127.0 | 169.3 | 200.0 |
| 45" | | 79.0 | 118.5 | 158.0 | 197.5 |
| 48" | | 74.1 | 111.1 | 148.1 | 185.2 |
| 51" | | 69.7 | 104.6 | 139.4 | 174.3 |
| 54" | | 65.8 | 98.8 | 131.7 | 164.6 |
| 57" | | 62.4 | 93.6 | 124.8 | 155.9 |
| 60" | | 59.3 | 88.9 | 118.5 | 148.1 |
| 36" | 168" | 95.2 | 142.9 | 190.5 | 200.0 |
| 39" | | 87.9 | 131.9 | 175.8 | 200.0 |
| 42" | | 81.6 | 122.4 | 163.3 | 200.0 |
| 45" | | 76.2 | 114.3 | 152.4 | 190.5 |
| 48" | | 71.4 | 107.1 | 142.9 | 178.6 |
| 51" | | 67.2 | 100.8 | 134.5 | 168.1 |
| 54" | | 63.5 | 95.2 | 127.0 | 158.7 |
| 57" | | 60.2 | 90.2 | 120.3 | 150.4 |
| 60" | | 57.1 | 85.7 | 114.3 | 142.9 |

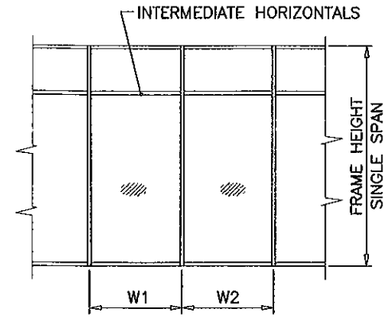


$$\text{WIDTH (W)} = \frac{W1 + W2}{2}$$

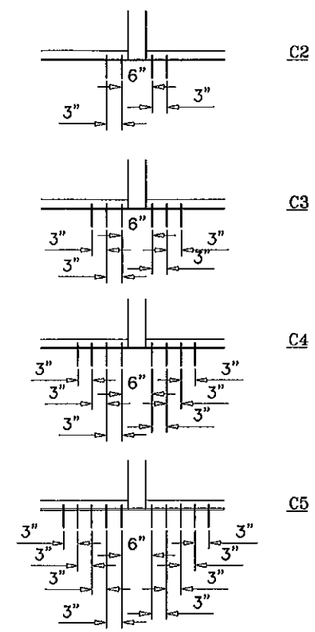


ANCHORS TYPES C (INTO METAL STRUCTURES): SEE SHEET 9 FOR DESCRIPTION

C2 = (2) ANCHORS TYPE 'C' AT EACH SIDE OF MULLION
C3 = (3) ANCHORS TYPE 'C' AT EACH SIDE OF MULLION
C4 = (4) ANCHORS TYPE 'C' AT EACH SIDE OF MULLION
C5 = (5) ANCHORS TYPE 'C' AT EACH SIDE OF MULLION

ALL OTHER ANCHORS TO BE SPACED AS PER ELEVATION.

PRODUCT REVISED
in complying with the Florida
Building Code
Acceptance No. 12-0223.36
Expiration Date 9/14/16
By Ishaq I. Chauda
Miami-Dade Product Control

Engr: JAVAD AHMAD
CIVIL
FLA. PE # 70592
C.A.N. 3538
FEB 14 2012


AL-FAROOQ CORPORATION
ENGINEERS & PRODUCT DEVELOPMENT
1235 S.W. 87 AVE
MIAMI, FLORIDA 33174
TEL. (305) 264-8100 FAX. (305) 262-6978
STORE\W04-105CTC


PRO-TECH 7SG ALUM CURTAIN WALL SYSTEM (N.I.)

CRAWFORD TRACEY CORPORATION
3301 SW 13TH DRIVE
DEERFIELD BEACH, FL. 33442-8101
TEL. (954) 698-6888 FAX. (954) 698-6889

revisions:

| no | date | by | description |
|---|---|---|---|
| E | 06.19.08 | | NO CHANGE THIS SHEET |
| F | 11.11.10 | | GENERAL REVISION |
| G | 03.02.11 | | REV. PER BCCO COMMENTS |
| H | 05.10.11 | | NO CHANGE THIS SHEET |
| I | 01.16.12 | | NO CHANGE THIS SHEET |

date: 12-30-04
scale: 3/8"=1'-0"
dr. by: HAMID
chk. by:

drawing no.
W04-105

| ANCHOR LOAD CAPACITY – PSF EXT.(+) & INT.(–) | | | | | |
|---|---|---|---|---|---|
| NOMINAL DIMS. | | 4 ANCHORS PER PLATE TYPE 'D' | | 6 ANCHORS PER PLATE TYPE 'D' | |
| WIDTH (W) | FRAME HEIGHT | 2–1/4" EDGE DIST. | 3–1/4" EDGE DIST. | 2–1/4" EDGE DIST. | 3–1/4" EDGE DIST. |
| 36" | 120" | 108.7 | 171.8 | 163.0 | 200.0 |
| 39" | | 100.3 | 158.6 | 150.5 | 200.0 |
| 42" | | 93.1 | 147.3 | 139.7 | 200.0 |
| 45" | | 86.9 | 137.4 | 130.4 | 200.0 |
| 48" | | 81.5 | 128.9 | 122.3 | 193.3 |
| 51" | | 76.7 | 121.3 | 115.1 | 181.9 |
| 54" | | 72.4 | 114.5 | 108.7 | 171.8 |
| 57" | | 68.6 | 108.5 | 102.9 | 162.8 |
| 60" | | 65.2 | 103.1 | 97.8 | 154.6 |
| 63" | | 62.1 | 98.2 | 93.1 | 147.3 |
| 66" | | 59.3 | 93.7 | 88.9 | 140.6 |
| 69" | | 56.7 | 89.6 | 85.0 | 134.5 |
| 72" | | 54.3 | 85.9 | 81.5 | 128.9 |
| 36" | 126" | 103.5 | 163.6 | 155.2 | 200.0 |
| 39" | | 95.5 | 151.0 | 143.3 | 200.0 |
| 42" | | 88.7 | 140.2 | 133.1 | 200.0 |
| 45" | | 82.8 | 130.9 | 124.2 | 196.4 |
| 48" | | 77.6 | 122.7 | 116.4 | 184.1 |
| 51" | | 73.1 | 115.5 | 109.6 | 173.3 |
| 54" | | 69.0 | 109.1 | 103.5 | 163.6 |
| 57" | | 65.4 | 103.3 | 98.0 | 155.0 |
| 60" | | 62.1 | 98.2 | 93.1 | 147.3 |
| 63" | | 59.1 | 93.5 | 88.7 | 140.3 |
| 66" | | 56.5 | 89.2 | 84.7 | 133.9 |
| 69" | | 54.0 | 85.4 | 81.0 | 128.1 |
| 72" | | 51.7 | 81.8 | 77.6 | 122.7 |
| 36" | 132" | 98.8 | 156.2 | 148.2 | 200.0 |
| 39" | | 91.2 | 144.2 | 136.8 | 200.0 |
| 42" | | 84.7 | 133.9 | 127.0 | 200.0 |
| 45" | | 79.0 | 124.9 | 118.5 | 187.4 |
| 48" | | 74.1 | 117.1 | 111.1 | 175.7 |
| 51" | | 69.7 | 110.2 | 104.6 | 165.4 |
| 54" | | 65.9 | 104.1 | 98.8 | 156.2 |
| 57" | | 62.4 | 98.6 | 93.6 | 148.0 |
| 60" | | 59.3 | 93.7 | 88.9 | 140.6 |
| 63" | | 56.5 | 89.2 | 84.7 | 133.9 |
| 66" | | 53.9 | 85.2 | 80.8 | 127.8 |
| 69" | | 51.5 | 81.5 | 77.3 | 122.2 |
| 72" | | 49.4 | 78.1 | 74.1 | 117.2 |
| 36" | 138" | 94.5 | 149.4 | 141.7 | 200.0 |
| 39" | | 87.2 | 137.9 | 130.8 | 200.0 |
| 42" | | 81.0 | 128.0 | 121.5 | 192.1 |
| 45" | | 75.6 | 119.5 | 113.4 | 179.3 |
| 48" | | 70.9 | 112.0 | 106.3 | 168.1 |
| 51" | | 66.7 | 105.5 | 100.1 | 158.2 |
| 54" | | 63.0 | 99.6 | 94.5 | 149.4 |
| 57" | | 59.7 | 94.4 | 89.5 | 141.5 |
| 60" | | 56.7 | 89.6 | 85.0 | 134.5 |
| 63" | | 54.0 | 85.4 | 81.0 | 128.1 |
| 66" | | 51.5 | 81.5 | 77.3 | 122.2 |
| 69" | | 49.3 | 77.9 | 74.0 | 116.9 |
| 72" | | 47.2 | 74.7 | 70.9 | 112.1 |

| ANCHOR LOAD CAPACITY – PSF EXT.(+) & INT.(–) | | | | | |
|---|---|---|---|---|---|
| NOMINAL DIMS. | | 4 ANCHORS PER PLATE TYPE 'D' | | 6 ANCHORS PER PLATE TYPE 'D' | |
| WIDTH (W) | FRAME HEIGHT | 2–1/4" EDGE DIST. | 3–1/4" EDGE DIST. | 2–1/4" EDGE DIST. | 3–1/4" EDGE DIST. |
| 36" | 144" | 90.6 | 143.2 | 135.8 | 200.0 |
| 39" | | 83.6 | 132.2 | 125.4 | 198.3 |
| 42" | | 77.6 | 122.7 | 116.4 | 184.1 |
| 45" | | 72.4 | 114.5 | 108.7 | 171.8 |
| 48" | | 67.9 | 107.4 | 101.9 | 161.1 |
| 51" | | 63.9 | 101.1 | 95.9 | 151.6 |
| 54" | | 60.4 | 95.4 | 90.6 | 143.2 |
| 57" | | 57.2 | 90.4 | 85.8 | 135.6 |
| 60" | | 54.3 | 85.9 | 81.5 | 128.9 |
| 63" | | 51.7 | 81.8 | 77.6 | 122.7 |
| 66" | | 49.4 | 78.1 | 74.1 | 117.2 |
| 69" | | 47.2 | 74.7 | 70.9 | 112.1 |
| 36" | 150" | 86.9 | 137.4 | 130.4 | 200.0 |
| 39" | | 80.2 | 126.9 | 120.4 | 190.3 |
| 42" | | 74.5 | 117.8 | 111.8 | 176.7 |
| 45" | | 69.5 | 110.0 | 104.3 | 164.9 |
| 48" | | 65.2 | 103.1 | 97.8 | 154.6 |
| 51" | | 61.4 | 97.0 | 92.0 | 145.5 |
| 54" | | 58.0 | 91.6 | 86.9 | 137.5 |
| 57" | | 54.9 | 86.8 | 82.4 | 130.2 |
| 60" | | 52.2 | 82.5 | 78.2 | 123.7 |
| 63" | | 49.7 | 78.5 | 74.5 | 117.8 |
| 66" | | 47.4 | 75.0 | 71.1 | 112.5 |
| 36" | 156" | 83.6 | 132.2 | 125.4 | 198.3 |
| 39" | | 77.2 | 122.0 | 115.7 | 183.0 |
| 42" | | 71.6 | 113.3 | 107.5 | 169.9 |
| 45" | | 66.9 | 105.7 | 100.3 | 158.6 |
| 48" | | 62.7 | 99.1 | 94.0 | 148.7 |
| 51" | | 59.0 | 93.3 | 88.5 | 139.9 |
| 54" | | 55.7 | 88.1 | 83.6 | 132.2 |
| 57" | | 52.8 | 83.5 | 79.2 | 125.2 |
| 60" | | 50.2 | 79.3 | 75.2 | 119.0 |
| 63" | | 47.8 | 75.5 | 71.6 | 113.3 |
| 36" | 162" | 80.5 | 127.3 | 120.7 | 190.9 |
| 39" | | 74.3 | 117.5 | 111.5 | 176.2 |
| 42" | | 69.0 | 109.1 | 103.5 | 163.6 |
| 45" | | 64.4 | 101.8 | 96.6 | 152.7 |
| 48" | | 60.4 | 95.4 | 90.6 | 143.2 |
| 51" | | 56.8 | 89.8 | 85.2 | 134.8 |
| 54" | | 53.7 | 84.8 | 80.5 | 127.3 |
| 57" | | 50.8 | 80.4 | 76.3 | 120.6 |
| 60" | | 48.3 | 76.4 | 72.4 | 114.5 |
| 36" | 168" | 77.6 | 122.7 | 116.4 | 184.1 |
| 39" | | 71.6 | 113.3 | 107.5 | 169.9 |
| 42" | | 66.5 | 105.2 | 99.8 | 157.8 |
| 45" | | 62.1 | 98.2 | 93.1 | 147.3 |
| 48" | | 58.2 | 92.0 | 87.3 | 138.1 |
| 51" | | 54.8 | 86.6 | 82.2 | 129.9 |
| 54" | | 51.7 | 81.8 | 77.6 | 122.7 |
| 57" | | 49.0 | 77.5 | 73.5 | 116.3 |
| 60" | | 46.6 | 73.6 | 69.9 | 110.5 |

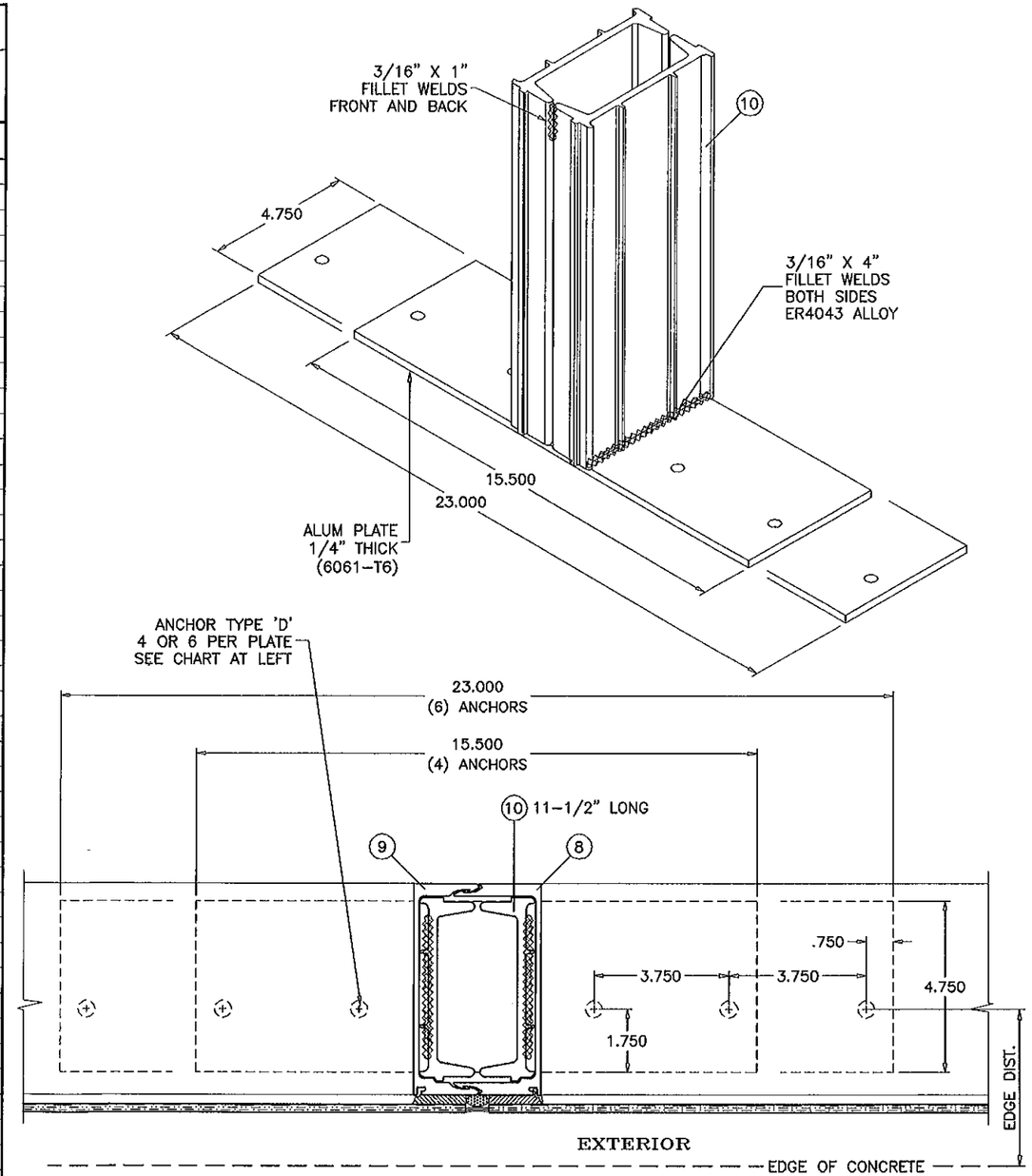


## TYPICAL ANCHORS:

TYPE 'D'– 3/8" DIA. WEDGE–BOLT ANCHOR BY 'POWER FASTENERS'
DIRECTLY INTO CONCRETE
1–1/2" MIN. EMBED INTO CONC. (3000 PSI MIN.)
EDGE DIST. (SEE CHARTS ABOVE)

Engr: JAVAD AHMAD
CIVIL
FLA. PE # 70592
C.A.N. 3638
FEB 15 2012

PRODUCT REVIEWED
as complying with the Florida
Building Code
Acceptance No. 12-0223.36
Expiration Date SEPT 4, 2016
Approval Date Product Control


AL-FAROOQ CORPORATION
ENGINEERS & PRODUCT DEVELOPMENT
1235 S.W. 87 AVE
MIAMI, FLORIDA 33174
TEL. (305) 264-8100 FAX. (305) 262-6978
STORE\W04–105CTC


PRO–TECH 7SG ALUM CURTAIN WALL SYSTEM (N.I.)

CRAWFORD TRACEY CORPORATION
3301 SW 13TH DRIVE
DEERFIELD BEACH, FL. 33442–8101
TEL. (954) 698–6888 FAX. (954) 698–6889

revisions:

| no | date | by | description |
|---|---|---|---|
| E | 08.19.08 | | NO CHANGE THIS SHEET |
| F | 11.11.10 | | GENERAL REVISION |
| G | 03.02.11 | | REV. PER BCCO COMMENTS |
| H | 05.10.11 | | NO CHANGE THIS SHEET |
| I | 01.16.12 | | NO CHANGE THIS SHEET |

date: 12–30–04
scale: 1/4" = 1"
dr. by: HAMID
chk. by:

drawing no.
W04–105

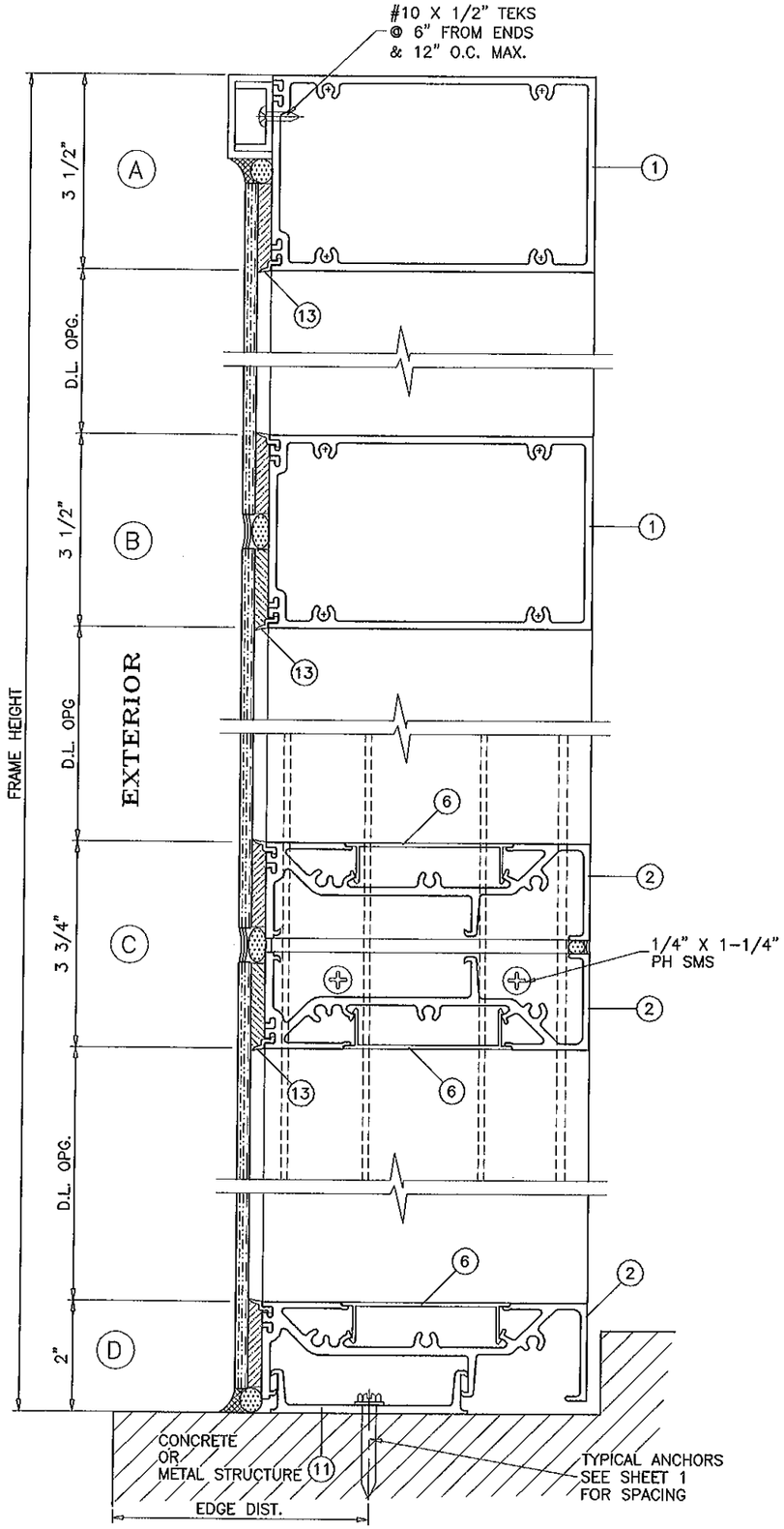


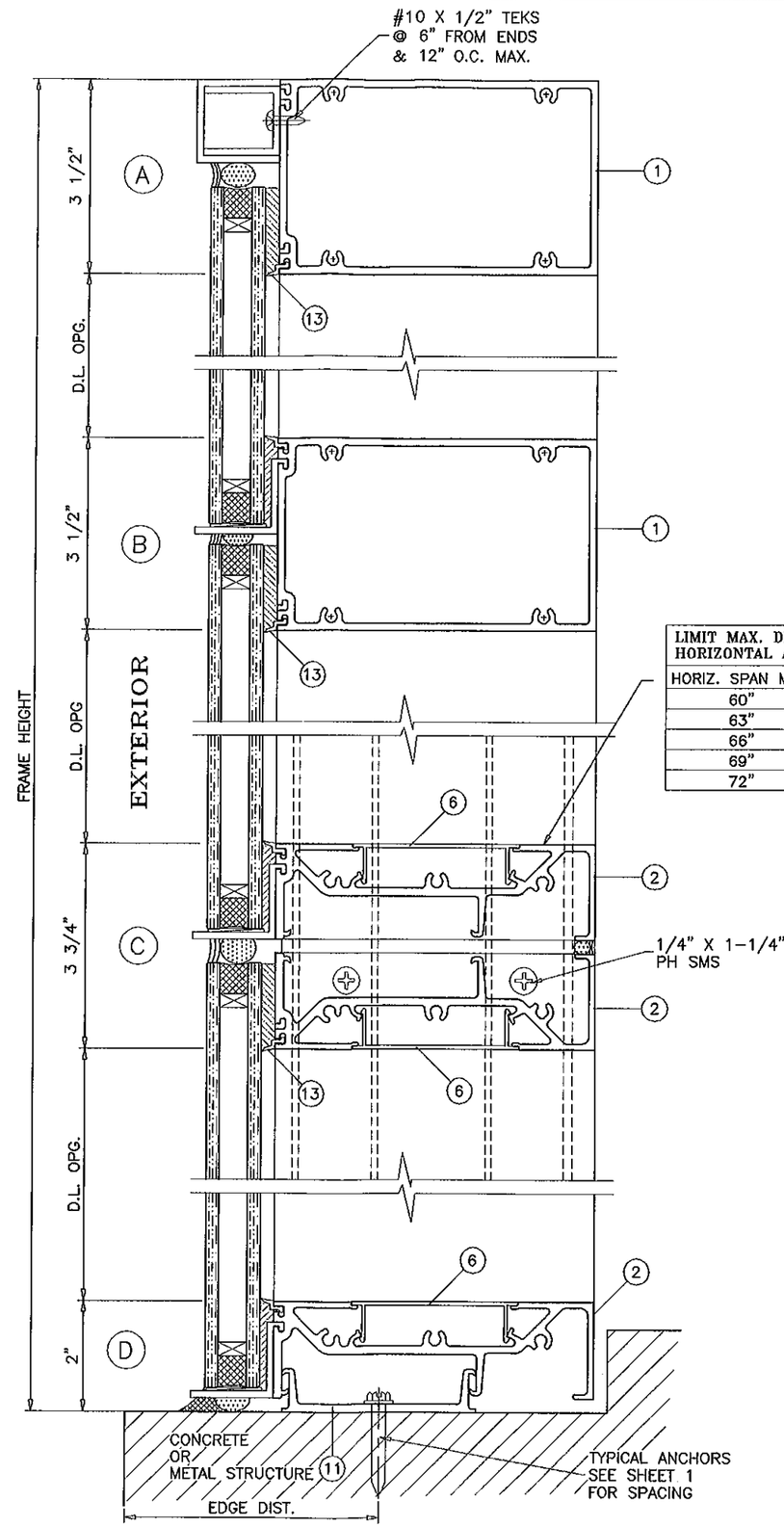


| LIMIT MAX. DESIGN LOADS FOR THIS HORIZONTAL AS FOLLOWS | |
|---|---|
| HORIZ. SPAN MAX. | DESIGN LOADS |
| 60" | 200 PSF |
| 63" | 150 PSF |
| 66" | 115 PSF |
| 69" | 89 PSF |
| 72" | 70 PSF |

PRODUCT REVISED
as complying with the Florida
Building Code
Acceptance No. 12-0223.36
Expiration Date 9/14/16
By Isaac Llanda
Miami-Dade Product Control

Engr: JAVAD AHMAD
CIVIL
FLA. PE # 70592
C.A.N. 3538
FEB 15 2012


AL-FAROOQ CORPORATION
ENGINEERS & PRODUCT DEVELOPMENT
1235 S.W. 87 AVE
MIAMI, FLORIDA 33174
TEL. (305) 264-8100 FAX. (305) 262-6978


STORE\W04-105CTC

PRO-TECH 7SG ALUM CURTAIN WALL SYSTEM (N.I.)

CRAWFORD TRACEY CORPORATION
3301 SW 13TH DRIVE
DEERFIELD BEACH, FL. 33442-8101
TEL. (954) 698-6888 FAX. (954) 698-6889

revisions:

| no | date | by | description |
|---|---|---|---|
| E | 08.19.08 | | REV. PER BCCO COMMENTS |
| F | 11.11.10 | | GENERAL REVISION |
| G | 03.02.11 | | REV. PER BCCO COMMENTS |
| H | 05.10.11 | | NO CHANGE THIS SHEET |
| I | 01.16.12 | | NO CHANGE THIS SHEET |

date: 12-30-04
scale: 3/8" = 1"
dr. by: HAMID
chk. by:

drawing no.
W04-105

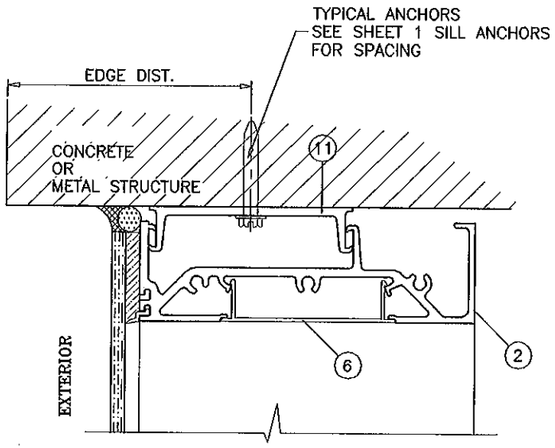


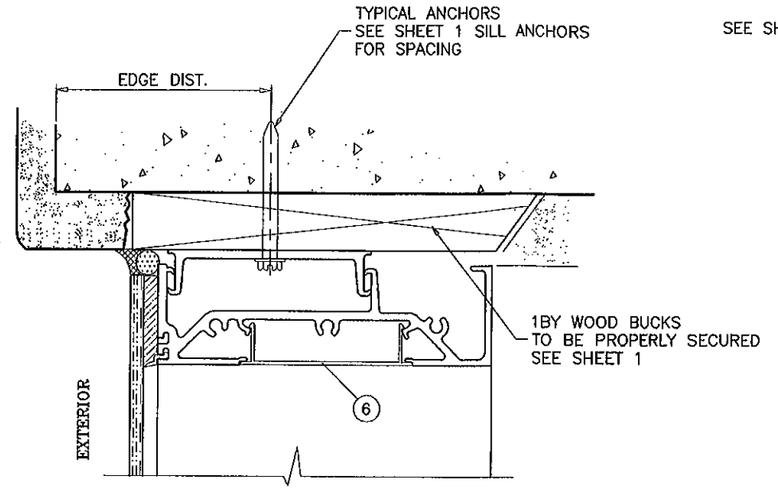


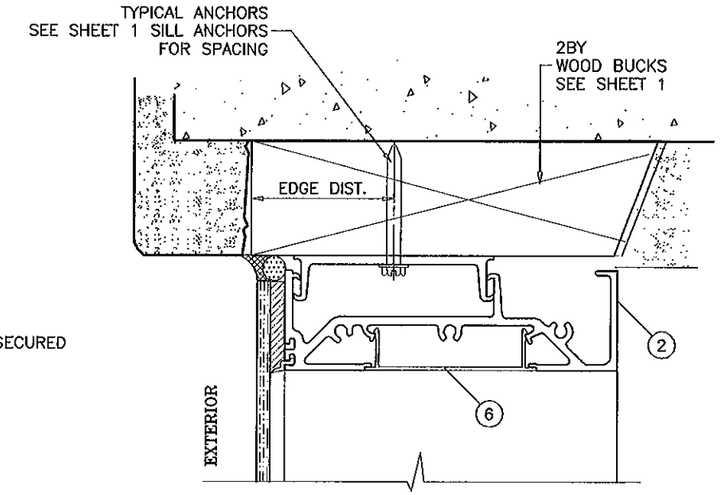


WOOD/METAL STRUCTURES NOT BY CRAWFORD TRACEY, MUST SUPPORT LOADS IMPOSED BY GLAZING SYSTEM AND TRANSFER THEM TO THE BUILDING STRUCTURE.

## TYPICAL ANCHORS: SEE ELEV. FOR SPACING

TYPE 'AA'– 5/16" DIA. ULTRACON BY 'ELCO' (Fu=177 KSI, Fy=155 KSI)
INTO 2BY WOOD BUCKS OR WOOD STRUCTURES
1–3/8" MIN. PENETRATION INTO WOOD

TYPE 'A'– 5/16" DIA. ULTRACON BY 'ELCO' (Fu=177 KSI, Fy=155 KSI)
THRU 1BY BUCKS INTO CONC. OR MASONRY
1–1/4" MIN. EMBED INTO CONC. OR MASONRY

TYPE 'B'– 1/4" DIA. ULTRACON BY 'ELCO' (Fu=177 KSI, Fy=155 KSI)
DIRECTLY INTO CONC. OR MASONRY
1–1/4" MIN. EMBED INTO CONC. OR MASONRY

TYPE 'C'– 1/4" DIA TEKS OR SELF DRILLING SCREWS (GRADE 5 CRS)
INTO METAL STRUCTURES (MIN. 1/8" EMBED INTO SUBSTRATE)
STEEL : 1/8" THK. MIN. (Fy = 36 KSI MIN.)
ALUMINUM : 1/8" THK. MIN. (6063–T5 MIN.)
(STEEL IN CONTACT WITH ALUMINUM TO BE PLATED OR PAINTED)

TYPICAL EDGE DISTANCE
INTO CONCRETE AND MASONRY = 2–1/2" MIN.
INTO WOOD STRUCTURE = 1–1/4" MIN.
INTO METAL STRUCTURE = 3/4" MIN.

CONCRETE AT HEAD, SILL OR JAMBS f'c = 3000 PSI MIN. (EXCEPT AS NOTED)
C–90 HOLLOW/FILLED BLOCK AT JAMBS f'm = 2000 PSI MIN.

TYPE 'D'– 3/8" WEDGE BOLTS BY 'POWER FASTENERS' (SEE SHEET 7)

PRODUCT REVISED
In complying with the Florida Building Code
Application No. 12-0223.36
Expiration Date 9/14/16
Product Control

Engr: JAVAD AHMAD
CIVIL
FLA. PE # 70592
C.A.N. 3538
FEB 1 8 2012


AL-FAROOQ CORPORATION
ENGINEERS & PRODUCT DEVELOPMENT
1235 S.W. 87 AVE
MIAMI, FLORIDA 33174
TEL. (305) 264-8100 FAX. (305) 262-6978


STORE\W04-105CTC

PRO-TECH 7SG ALUM CURTAIN WALL SYSTEM (N.I.)


CRAWFORD TRACEY CORPORATION
3301 SW 13TH DRIVE
DEERFIELD BEACH, FL. 33442-8101
TEL. (954) 698-6888 FAX. (954) 698-6889


revisions:

| no | date | by | description |
|---|---|---|---|
| E | 08.19.08 | | REV. PER BCCO COMMENTS |
| F | 11.11.10 | | GENERAL REVISION |
| G | 03.02.11 | | REV. PER BCCO COMMENTS |
| H | 05.10.11 | | NO CHANGE THIS SHEET |
| I | 01.16.12 | | NO CHANGE THIS SHEET |

date: 12–30–04
scale: 3/8" = 1"
dr. by: HAMID
chk. by:

drawing no.
W04–105

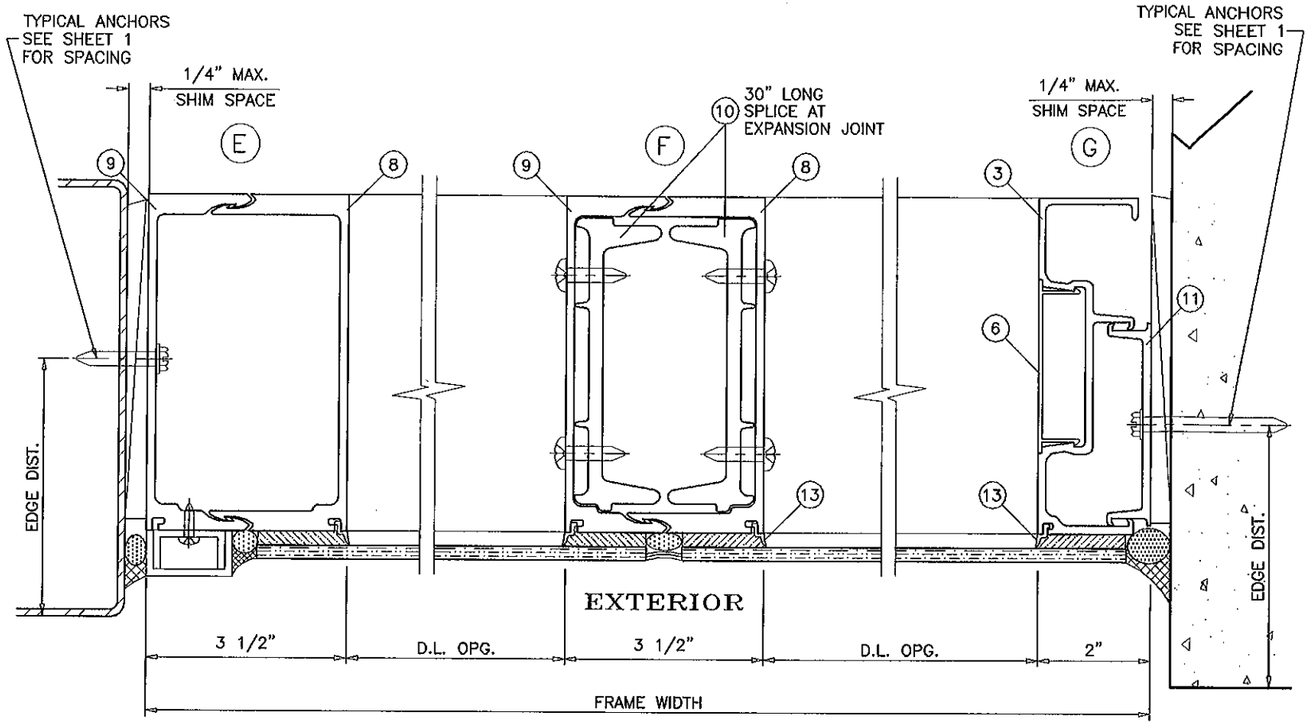


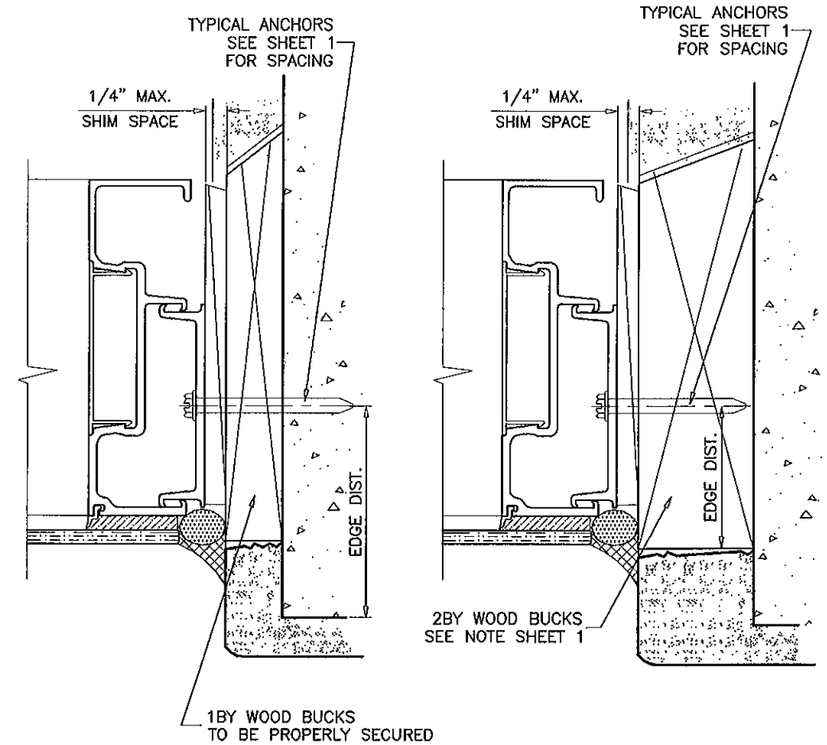


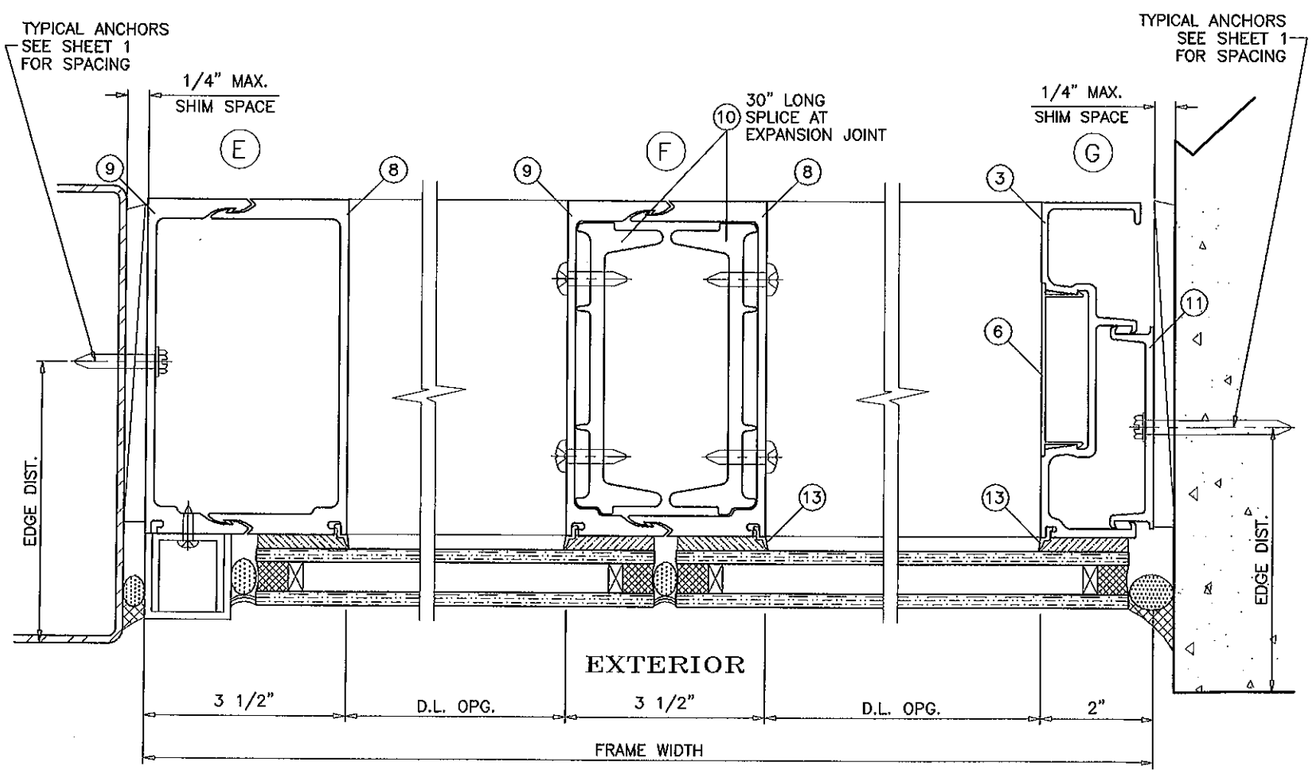


**PRODUCT REVIEWED**
as complying with the Florida
Building Code
Acceptance No. 12-0223.36
Expiration Date 9/14/16
By Miami Dade Product Control

Engr: JAVAD AHMAD
CIVIL
FLA. PE # 70592
C.A.N. 3538
FEB 15 2012


**AL-FAROOQ CORPORATION**
ENGINEERS & PRODUCT DEVELOPMENT
1235 S.W. 87 AVE
MIAMI, FLORIDA 33174
TEL. (305) 264-8100 FAX. (305) 262-6978


STORE\W04-105CTC

PRO-TECH 7SG ALUM CURTAIN WALL SYSTEM (N.I.)

**CRAWFORD TRACEY CORPORATION**
3301 SW 13TH DRIVE
DEERFIELD BEACH, FL. 33442-8101
TEL. (954) 698-6888 FAX. (954) 698-6889

revisions:

| no | date | by | description |
|---|---|---|---|
| E | 08.19.08 | | REV. PER BCCO COMMENTS |
| F | 11.11.10 | | GENERAL REVISION |
| G | 03.02.11 | | REV. PER BCCO COMMENTS |
| H | 05.10.11 | | REV. PER BNC COMMENTS |
| I | 01.16.12 | | NO CHANGE THIS SHEET |

date: 12-30-04
scale: 3/8" = 1"
dr. by: HAMID
chk. by:

drawing no.
W04-105

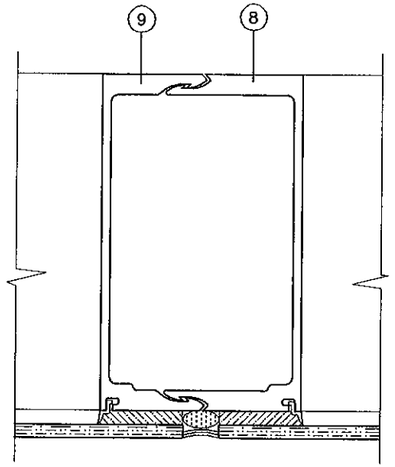


MULLION
UNREINFORCED

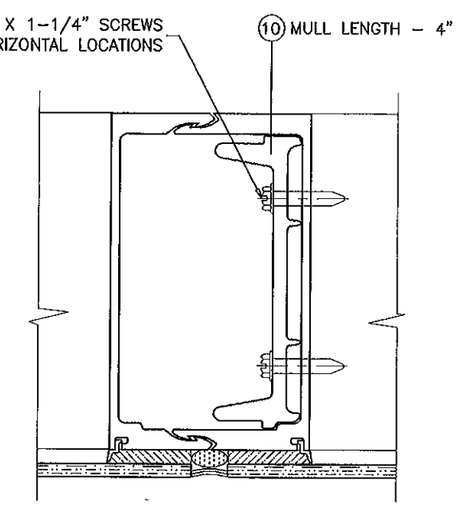


MULLION
ALUM REINFORCING

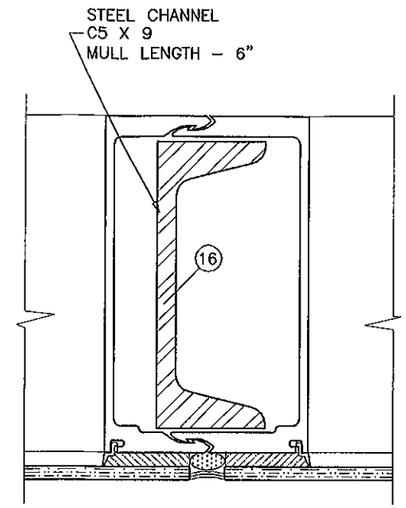


MULLION
STEEL REINFORCING

EXTERIOR

**PRODUCT REVISED**
**as complying with the Florida Building Code**
**Acceptance No** 12-0223.36
**Expiration Date** 9/14/16
**By** Ishaq Hamide
**Miami Dade Product Control**

Engr: JAVAD AHMAD
CIVIL
FLA. PE # 70592
C.A.N. 3538

FEB 1 5 2012

PRO-TECH 7SG ALUM CURTAIN WALL SYSTEM (N.I.)

CRAWFORD TRACEY CORPORATION
3301 SW 13TH DRIVE
DEERFIELD BEACH, FL. 33442-8101
TEL. (954) 698-6888 FAX. (954) 698-6889


AL-FAROOQ CORPORATION
ENGINEERS & PRODUCT DEVELOPMENT
1235 S.W. 87 AVE
MIAMI, FLORIDA 33174
TEL. (305) 264-8100 FAX. (305) 262-6978


STORE\W04-105CTC

revisions:

| no | date | by | description |
|---|---|---|---|
| E | 08.19.08 | | NO CHANGE THIS SHEET |
| F | 11.11.10 | | GENERAL REVISION |
| G | 03.02.11 | | REV. PER BCCO COMMENTS |
| H | 05.10.11 | | NO CHANGE THIS SHEET |
| I | 01.16.12 | | NO CHANGE THIS SHEET |

date: 12-30-04
scale: 3/8" = 1"
dr. by: HAMID
chk. by:

drawing no.
W04-105

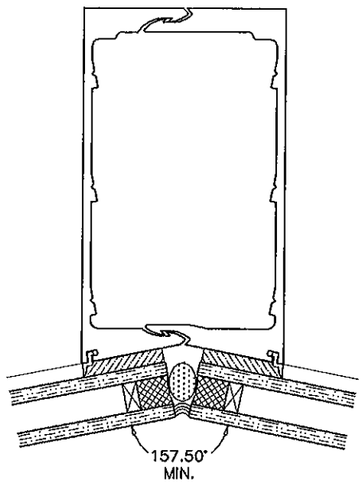


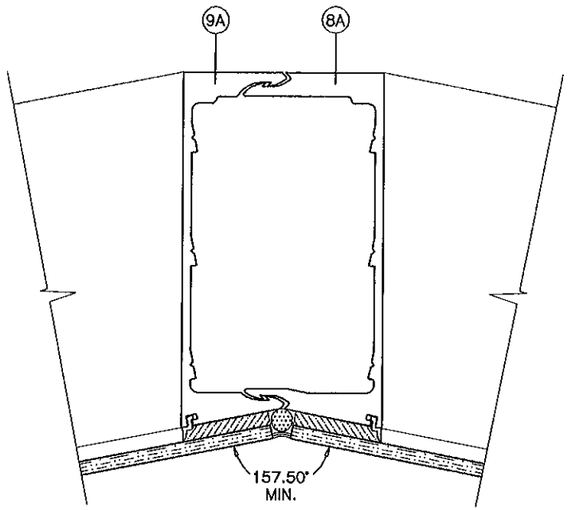


MULLION
UNREINFORCED
MAX. L = 120 IN.

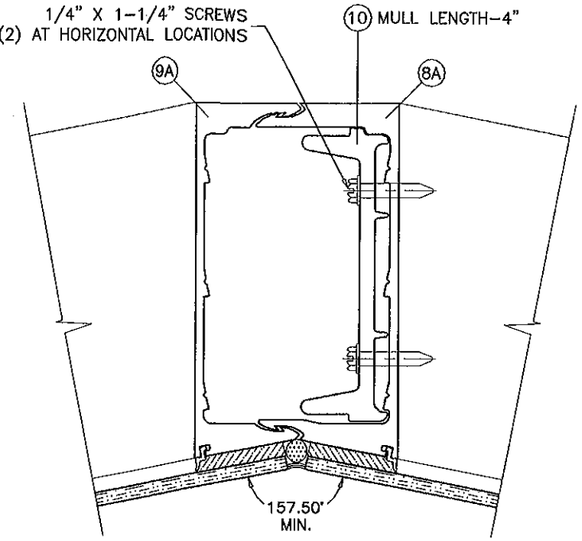


MULLION
ALUM REINFORCING

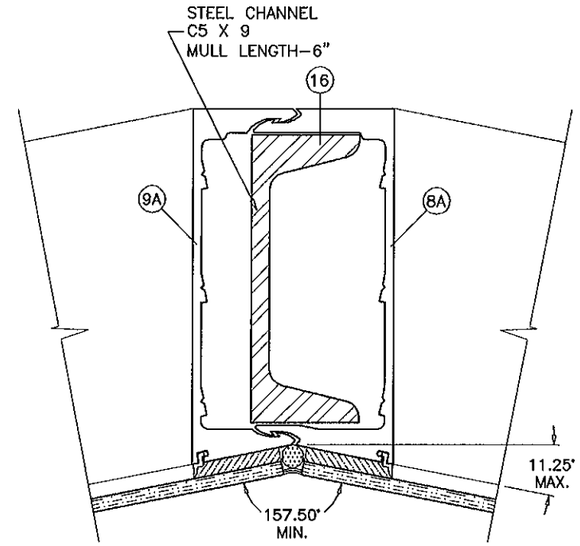


MULLION
STEEL REINFORCING

EXTERIOR

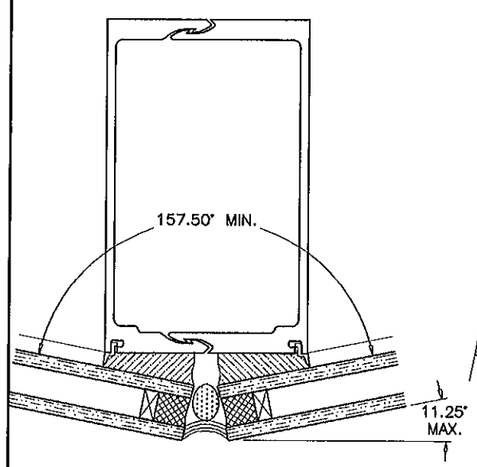


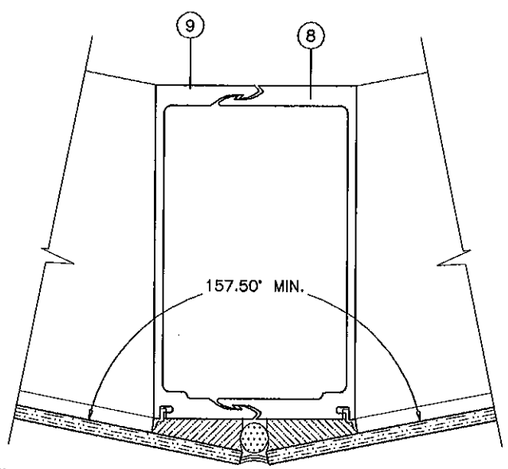


MULLION
UNREINFORCED
MAX. L = 120 IN.

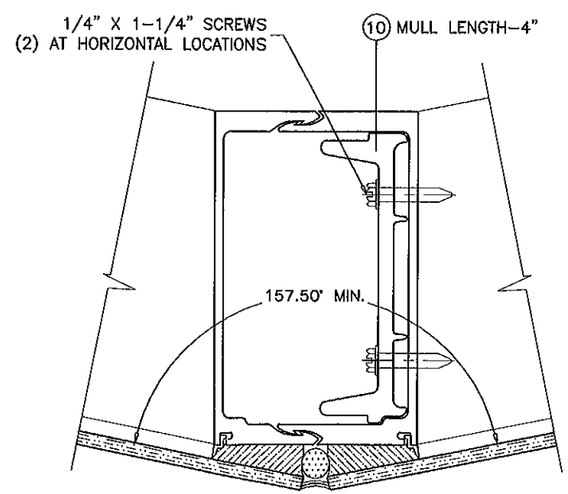


MULLION
ALUM REINFORCING

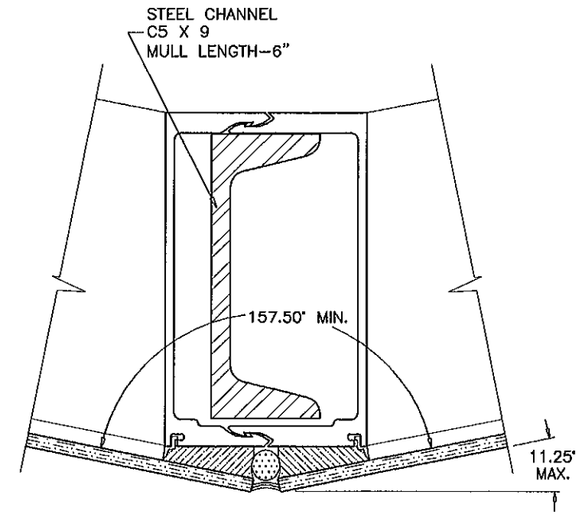


MULLION
STEEL REINFORCING

EXTERIOR

PRODUCT REVISED
to comply with the Florida
Building Code
Acceptance No 12-0223.36
Expiration Date 9/15/12
By Shaq Chand
Miami Dade Product Control

Engr: JAVAD AHMAD
CIVIL
FLA. P.E. # 70592
C.A.N. 3538
FEB 1 8 2012

**AL-FAROOQ CORPORATION**
ENGINEERS & PRODUCT DEVELOPMENT
1235 S.W. 87 AVE
MIAMI, FLORIDA 33174
TEL. (305) 264-8100 FAX. (305) 262-6978

STORE\W04-105CTC

PRO-TECH 7SG ALUM CURTAIN WALL SYSTEM (N.L.)

CRAWFORD TRACEY CORPORATION
3301 SW 13TH DRIVE
DEERFIELD BEACH, FL. 33442-8101
TEL. (954) 698-6888 FAX. (954) 698-6889

revisions:

| no | date | by | description |
|---|---|---|---|
| E | 08.19.08 | | REV. PER BCCO COMMENTS |
| F | 11.11.10 | | GENERAL REVISION |
| G | 03.02.11 | | REV. PER BCCO COMMENTS |
| H | 05.10.11 | | NO CHANGE THIS SHEET |
| I | 01.16.12 | | NO CHANGE THIS SHEET |

date: 12-30-04
scale: 3/8" = 1"
dr. by: HAMID
chk. by:

drawing no.
W04-105

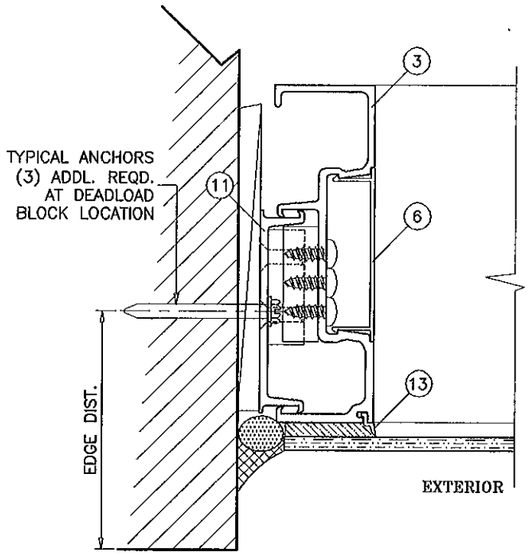


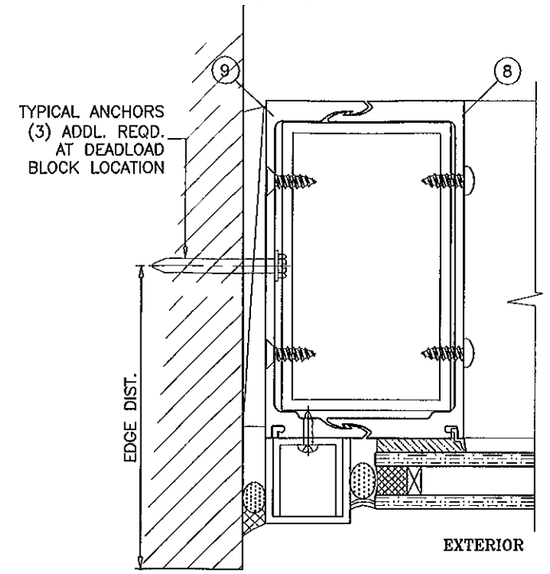


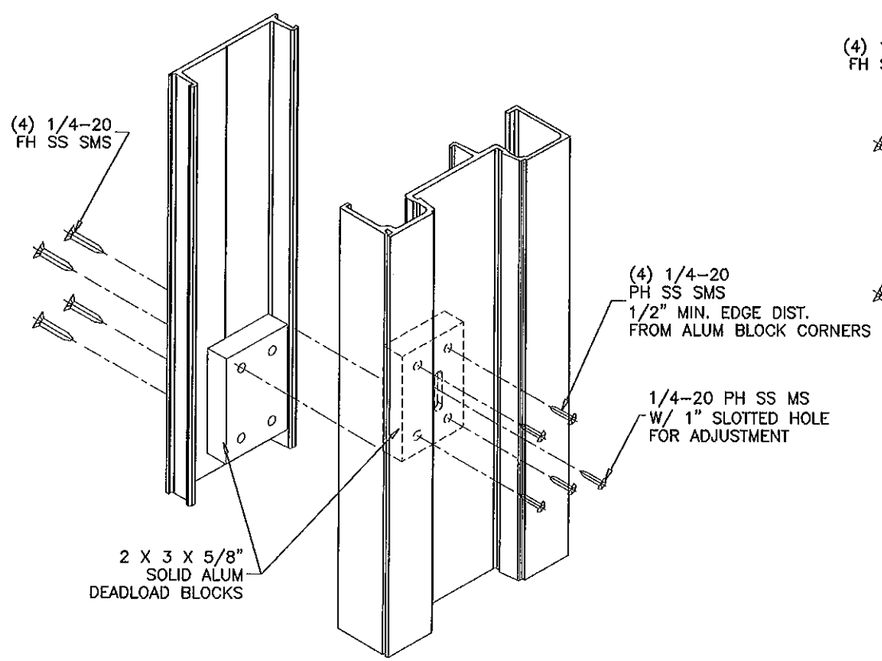


DEADLOAD BLOCKS DETAIL
TYPICAL JAMBS

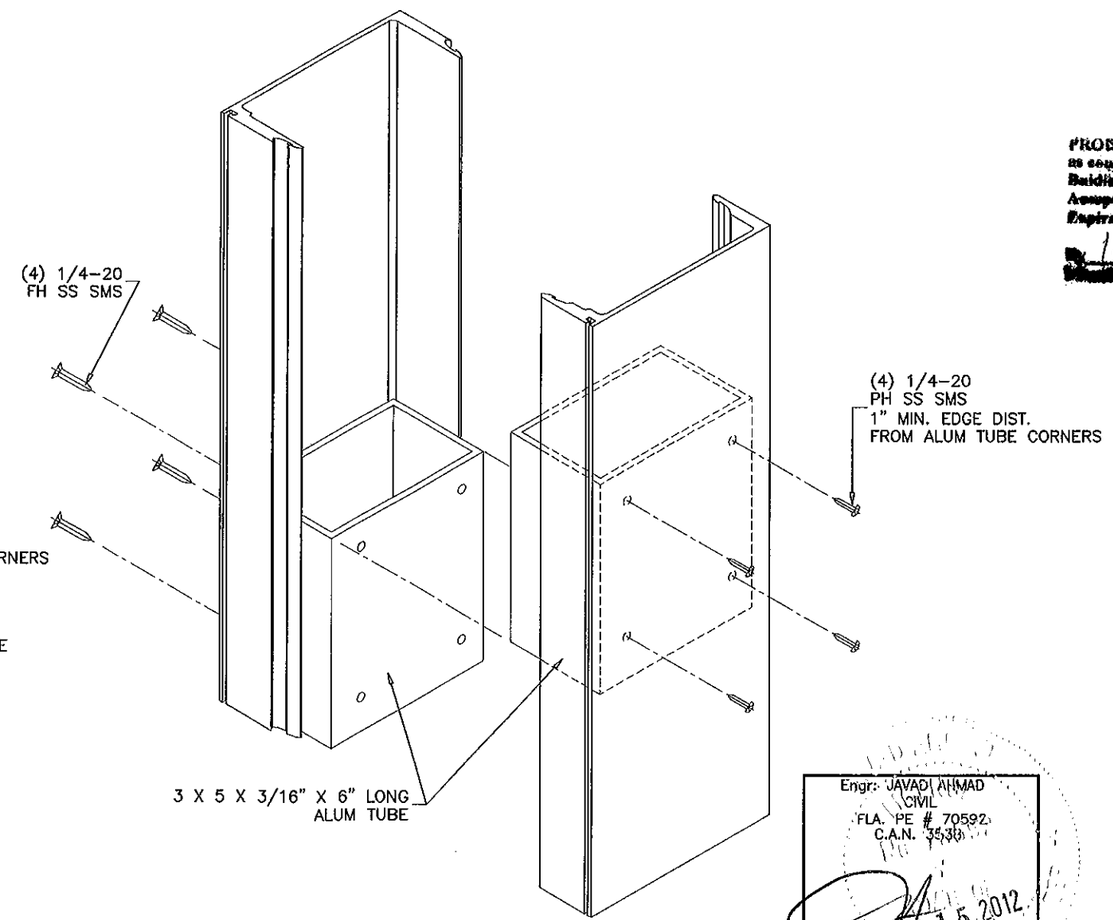


DEADLOAD BLOCKS DETAIL
ANCHORED MULLION AT JAMB

**PRODUCT REVISED**
**as complying with the Florida Building Code**
**Acceptance No** 12-0223.36
**Expiration Date** 9/14/16
**By** Ishag I. Khan
**Miami-Dade County Product Control**

Engr: JAVAD AHMAD
CIVIL
FLA. PE # 70592
C.A.N. 3530
FEB 15 2012


**AL-FAROOQ CORPORATION**
ENGINEERS & PRODUCT DEVELOPMENT
1235 S.W. 87 AVE
MIAMI, FLORIDA 33174
TEL. (305) 264-8100 FAX. (305) 262-6978


STORE\W04-105CTC

PRO-TECH 7SG ALUM CURTAIN WALL SYSTEM (N.I.)


**CRAWFORD TRACEY CORPORATION**
3301 SW 13TH DRIVE
DEERFIELD BEACH, FL. 33442-8101
TEL (954) 698-6888 FAX. (954) 698-6889


revisions:

| no | date | by | description |
|---|---|---|---|
| E | 08.19.08 | | REV. PER BCCO COMMENTS |
| F | 11.11.10 | | GENERAL REVISION |
| G | 03.02.11 | | REV. PER BCCO COMMENTS |
| H | 05.10.11 | | NO CHANGE THIS SHEET |
| I | 01.16.12 | | NO CHANGE THIS SHEET |

date: 12-30-04
scale: 3/8" = 1"
dr. by: HAMID
chk. by:

drawing no.
W04-105

## INTERMEDIATE ANCHOR TYPE ' I '

WIND LOAD ≤ 2250 LBS
DEAD LOAD ≤ 700 LBS

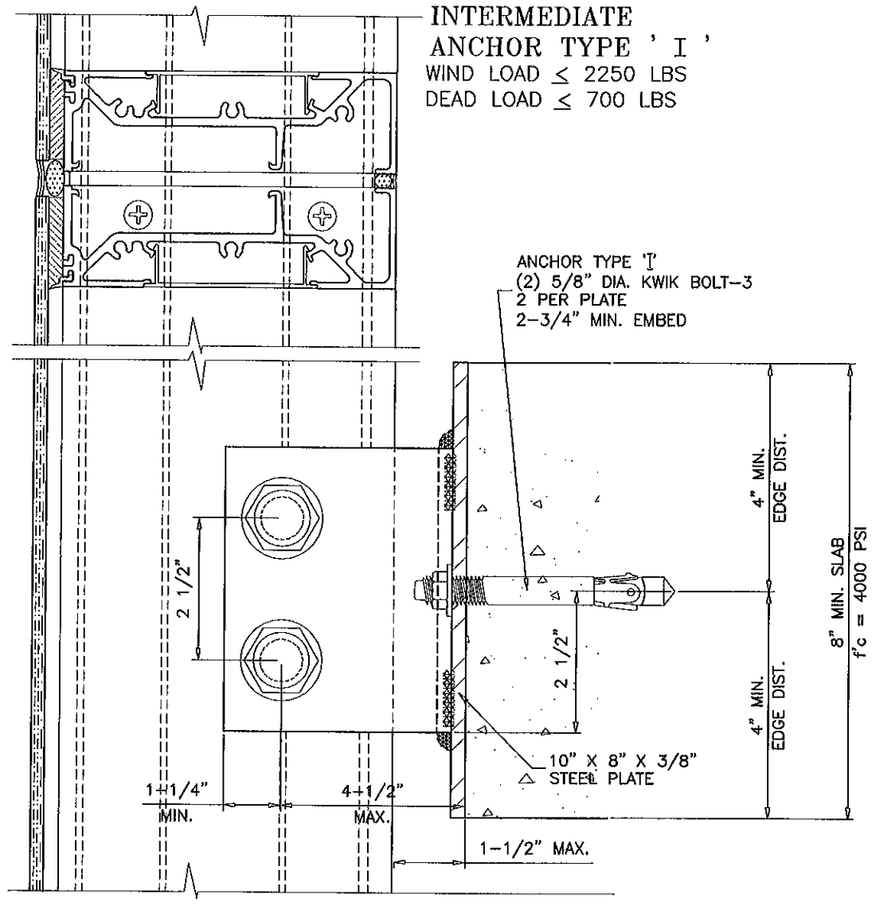


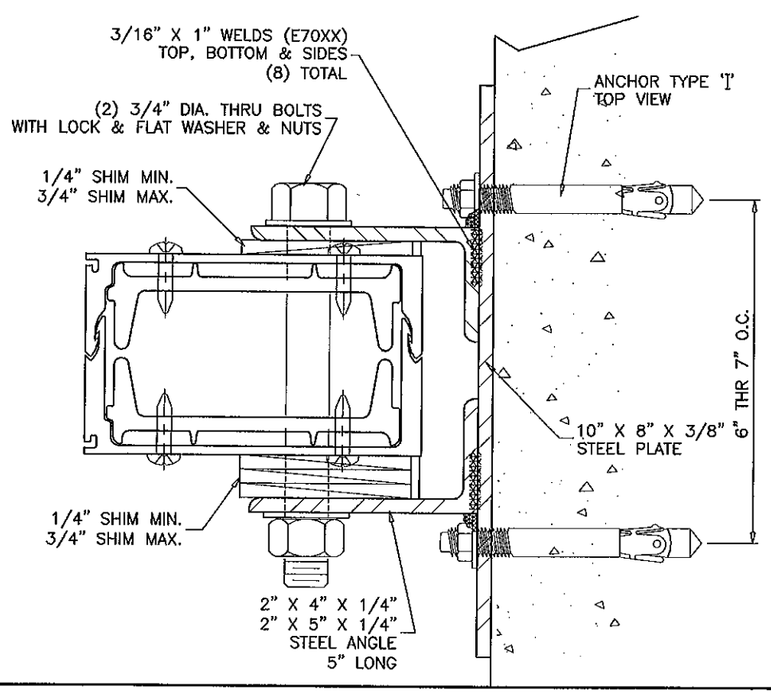


## INTERMEDIATE ANCHOR TYPE ' II '

WIND LOAD ≤ 5500 LBS
DEAD LOAD ≤ 1050 LBS

## INTERMEDIATE ANCHOR TYPE ' IIA '

WIND LOAD ≤ 7500 LBS
DEAD LOAD ≤ 1050 LBS

ANCHOR TYPE 'II' = 1/2" DIA. KWIK BOLT-3
3-1/2" MIN. EMBED
ANCHOR TYPE 'IIA' = 5/8" DIA. KWIK BOLT-3
4" MIN. EMBED
4 PER PLATE

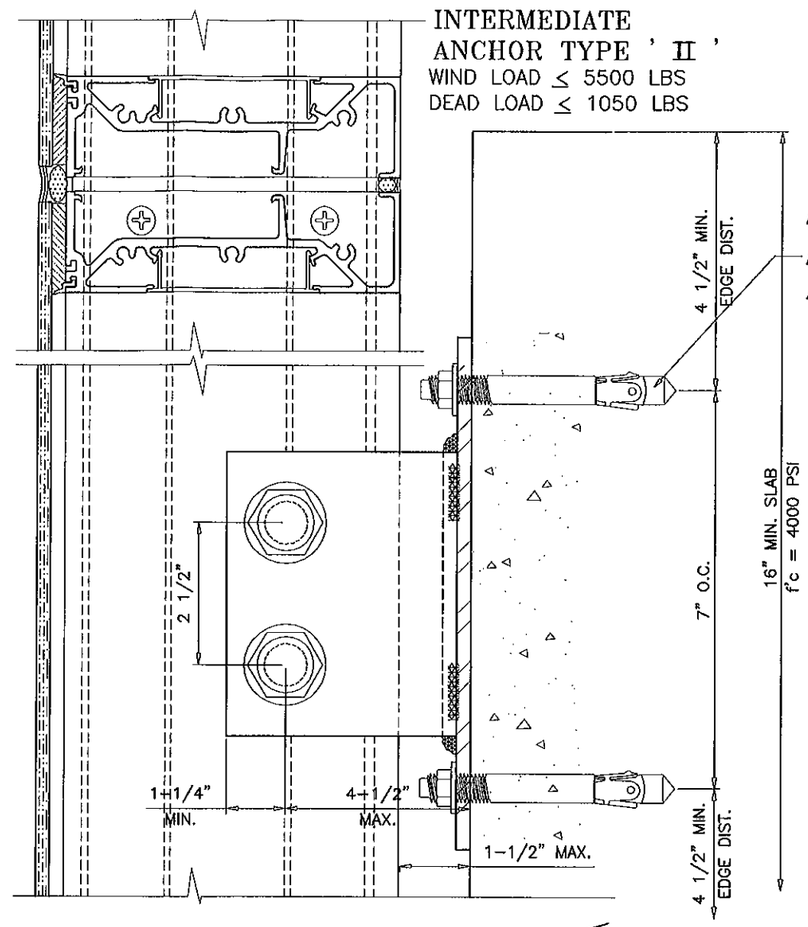


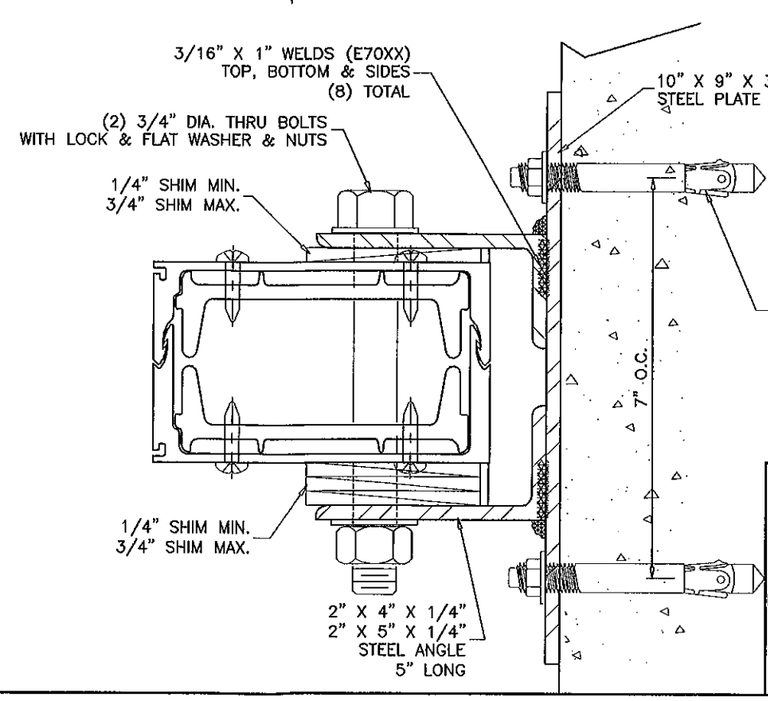


PRODUCT REVIEWED
in complying with the Florida Building Code
Acceptance No. 12-0223.36
Expiration Date 9/14/16
By Shay
Miami Dade Product Control

Engr: JAVAD AHMAD
CIVIL
FLA. PE # 70592
C.A.N. 3538

FEB 15 2012


AL-FAROOQ CORPORATION
ENGINEERS & PRODUCT DEVELOPMENT
1235 S.W. 87 AVE
MIAMI, FLORIDA 33174
TEL. (305) 264-8100 FAX. (305) 262-6978
STORE\W04-105CTC

PRO-TECH 7SG ALUM CURTAIN WALL SYSTEM (N.I.)
CRAWFORD TRACEY CORPORATION
3301 SW 13TH DRIVE
DEERFIELD BEACH, FL. 33442-8101
TEL. (954) 698-6888 FAX. (954) 698-6889


revisions:

| no | date | by | description |
|---|---|---|---|
| E | 08.19.08 | | NO CHANGE THIS SHEET |
| F | 11.11.10 | | GENERAL REVISION |
| G | 03.02.11 | | REV. PER BCCO COMMENTS |
| H | 05.10.11 | | NO CHANGE THIS SHEET |
| I | 01.16.12 | | NO CHANGE THIS SHEET |

date: 12-30-04
scale: 3/8" = 1"
dr. by: HAMID
chk. by:

drawing no.
W04-105

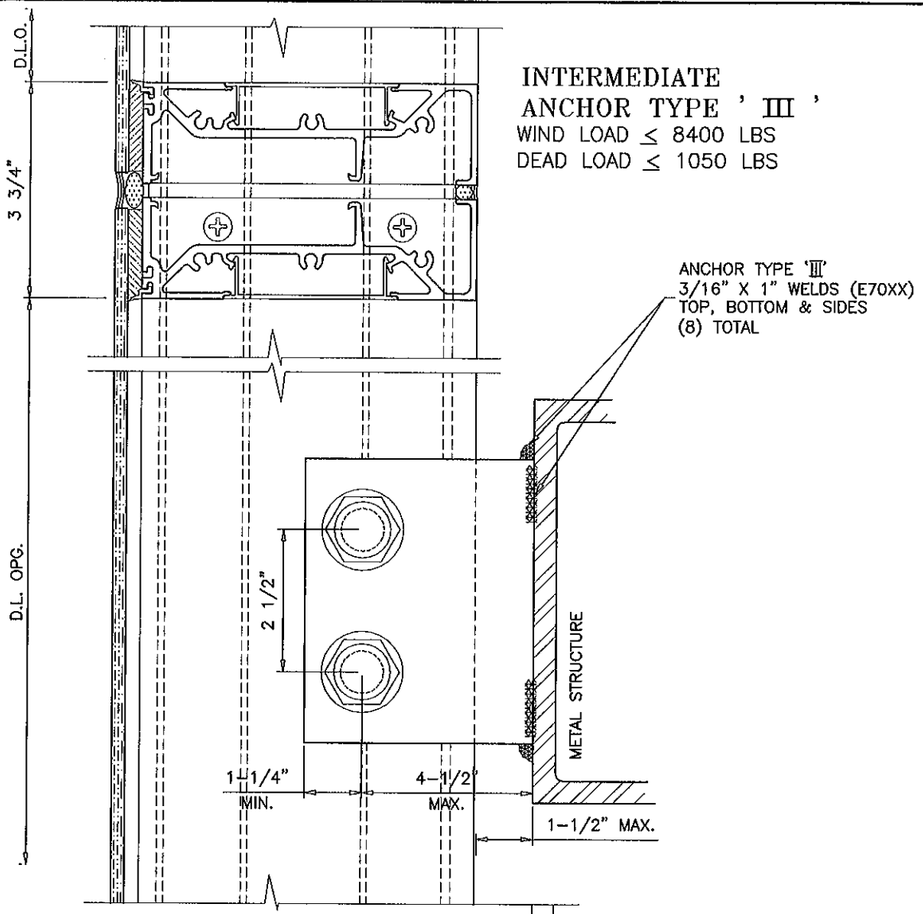


INTERMEDIATE
ANCHOR TYPE ' III '
WIND LOAD ≤ 8400 LBS
DEAD LOAD ≤ 1050 LBS

ANCHOR TYPE 'III'
3/16" X 1" WELDS (E70XX)
TOP, BOTTOM & SIDES
(8) TOTAL

METAL STRUCTURES NOT BY CRAWFORD TRACEY, MUST SUPPORT LOADS IMPOSED BY GLAZING SYSTEM AND TRANSFER THEM TO THE BUILDING STRUCTURE.

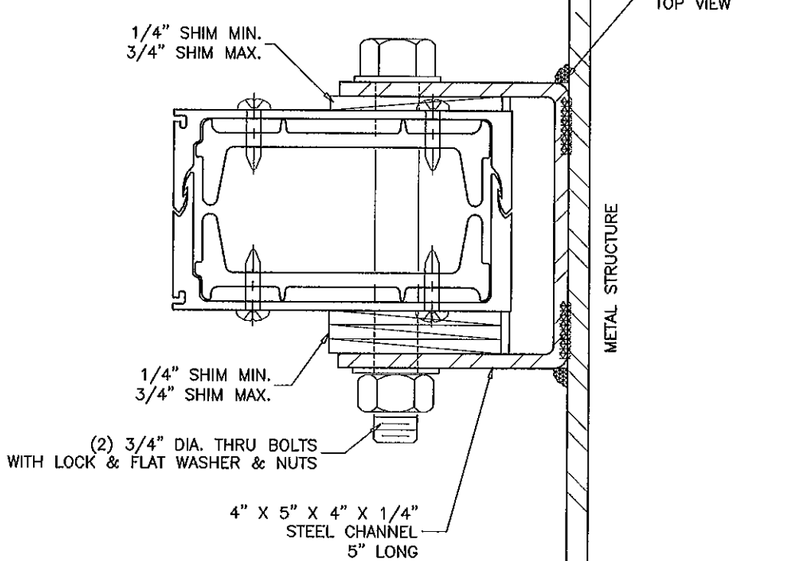


ANCHOR TYPE 'III'
TOP VIEW

PRODUCT REVISED
In complying with the Florida Building Code
Acceptance No. 12-0223.36
Expiration Date 9/14/16
By Ishaq I. Chaya
Miami Dade Product Control

Engr: JAVAD AHMAD
CIVIL
FLA. PE # 70592
C.A.N. 3538
FEB 15 2012


AL-FAROOQ CORPORATION
ENGINEERS & PROJECT DEVELOPMENT
1235 S.W. 87 AVE
MIAMI, FLORIDA 33174
TEL (305) 264-8100 FAX. (305) 262-6978
STORE\W04-105CTC


PRO-TECH 7SG ALUM CURTAIN WALL SYSTEM (N.I.)

CRAWFORD TRACEY CORPORATION
3301 SW 13TH DRIVE
DEERFIELD BEACH, FL 33442-8101
TEL. (954) 698-6888 FAX. (954) 698-6889

revisions:

| no | date | by | description |
|---|---|---|---|
| E | 08.19.08 | | REV. PER BCCO COMMENTS |
| F | 11.11.10 | | GENERAL REVISION |
| G | 03.02.11 | | REV. PER BCCO COMMENTS |
| H | 05.10.11 | | NO CHANGE THIS SHEET |
| I | 01.16.12 | | NO CHANGE THIS SHEET |

date: 12-30-04
scale: 3/8" = 1"
dr. by: HAMID
chk. by:

drawing no.
W04-105

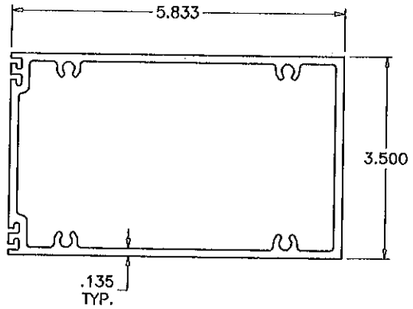


1 FRAME HEAD/HORIZONTAL

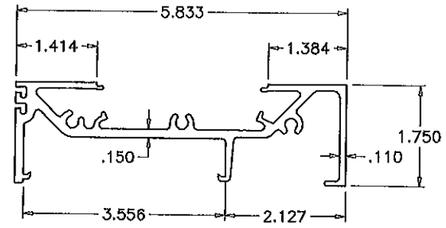


2 FRAME HEAD/SILL

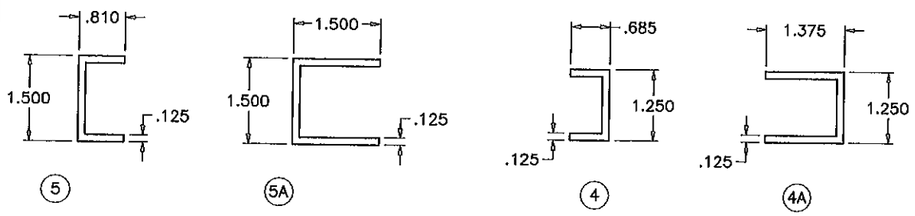


5 5A 4 4A

FILLER CHANNELS

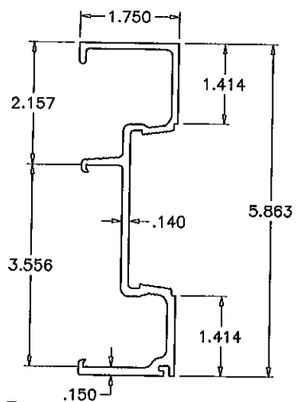


3 FRAME JAMB

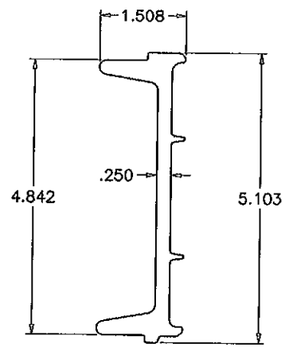


10 ALUM REINFORCING OR SPLICE

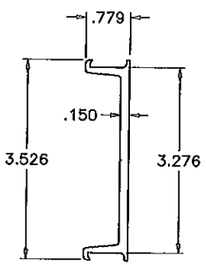


11 SUB BUCK

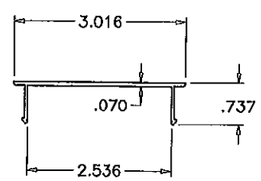


6 FRAME COVER

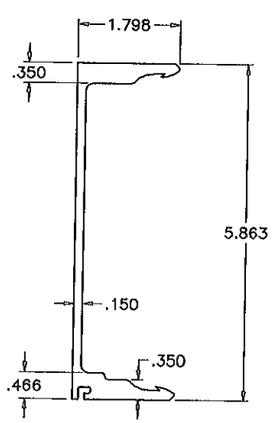


9 FEMALE JAMB/MULLION

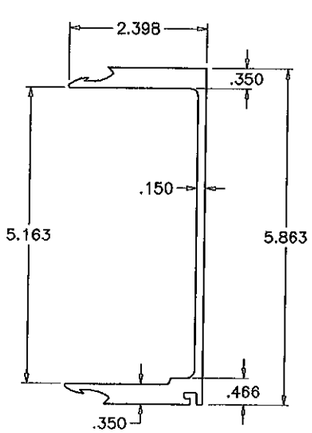


8 MALE JAMB/MULLION

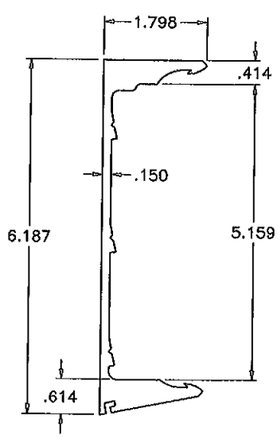


9A ALT. FEMALE MULLION

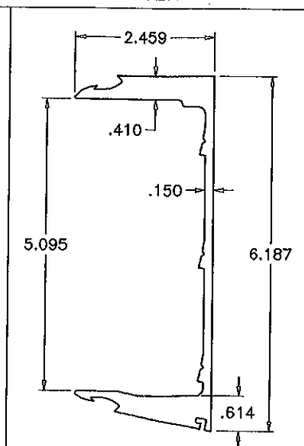


8A ALT. MALE MULLION

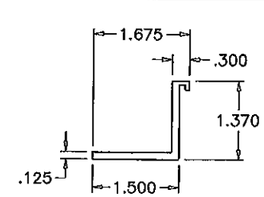


14 SETTING PIECE INSUL. GLASS

PRODUCT REVISED
To complying with the Florida Building Code
Authorization No. 12-0223.36
Expiration Date 9/14/16
By [illegible]
Miami Dade/Product Control

Engr: JAVAD AHMAD
CIVIL
FLA. P.E. # 70592
C.A.N. 3538
FEB 15 2012


AL-FAROOQ CORPORATION
ENGINEERS & PRODUCT DEVELOPMENT
1235 S.W. 87 AVE
MIAMI, FLORIDA 33174
TEL. (305) 264-8100 FAX. (305) 262-6978
STORE\W04-105CTC


PRO-TECH 7SG ALUM CURTAIN WALL SYSTEM (N.I.)

CRAWFORD TRACEY CORPORATION
3301 SW 13TH DRIVE
DEERFIELD BEACH, FL. 33442-8101
TEL. (954) 698-6888 FAX. (954) 698-6889

revisions:

| no | date | by | description |
|---|---|---|---|
| E | 08.19.08 | | NO CHANGE THIS SHEET |
| F | 11.11.10 | | GENERAL REVISION |
| G | 03.02.11 | | NO CHANGE THIS SHEET |
| H | 05.10.11 | | NO CHANGE THIS SHEET |
| I | 01.16.12 | | NO CHANGE THIS SHEET |

date: 12-30-04
scale: 3/8" = 1"
dr. by: HAMID
chk. by:

drawing no.
W04-105

| ITEM NO. | PART NO. | QUANTITY | DESCRIPTION | MATERIAL | MANF./SUPPLIER/REMARKS |
|---|---|---|---|---|---|
| 1 | 170H342 | AS REQD. | FRAME HEAD/HORIZONTAL | 6105-T5/6005A-T61 | – |
| 2 | 170P176 | AS REQD. | FRAME HEAD/SILL | 6105-T5/6005A-T61 | – |
| 3 | 170J176 | AS REQD. | FRAME JAMB | 6105-T5/6005A-T61 | – |
| 4 | – | AS REQD. | INT. FILLER CHANNEL (MONOLITHIC GLASS) | ALUMINUM | – |
| 4A | – | AS REQD. | INT. FILLER CHANNEL (MONOLITHIC INSUL. GLASS) | ALUMINUM | – |
| 5 | – | AS REQD. | EXT. FILLER CHANNEL (MONOLITHIC GLASS) | ALUMINUM | – |
| 5A | – | AS REQD. | EXT. FILLER CHANNEL (MONOLITHIC INSUL. GLASS) | ALUMINUM | – |
| 6 | T30U119 | AS REQD. | SNAP IN COVER | 6063-T6/6005A-T61 | – |
| 8 | 170M113 | AS REQD. | MALE JAMB/MULLION | 6105-T5/6005A-T61 | – |
| 8A | 170M115 | AS REQD. | ALT. MALE MULLION | 6105-T5/6005A-T61 | – |
| 9 | 170M114 | AS REQD. | FEMALE JAMB/MULLION | 6105-T5/6005A-T61 | – |
| 9A | 170M116 | AS REQD. | ALT. FEMALE MULLION | 6105-T5/6005A-T61 | – |
| 10 | 170R140 | AS REQD. | SPLICE | 6063-T6/6005A-T61 | 45" LONG |
| 11 | B32B070 | AS REQD. | SUB-BUCK | 6105-T5/6005A-T61 | – |
| 13 | #2 | AS REQD. | GLAZING SPACER | POLYPROPYLENE | – |
| 14 | 170-116 | AS REQD. | 4" LONG SETTING PIECE (INSUL. GLASS) | 6105-T5/6005A-T61 | AT 1/4 POINTS |
| 15 | 1/4"X1-1/4" | AS REQD. | FRAME ASSEMBLY SCREWS | ST. STEEL | PAN HEAD PHILLIPS |
| 16 | C5 X 9 | AS REQD. | STEEL CHANNEL | – | – |
| 17 | – | AS REQD. | SETTING BLOCK (1/16" X 1") | NEOPRENE | AT QUARTER POINTS |

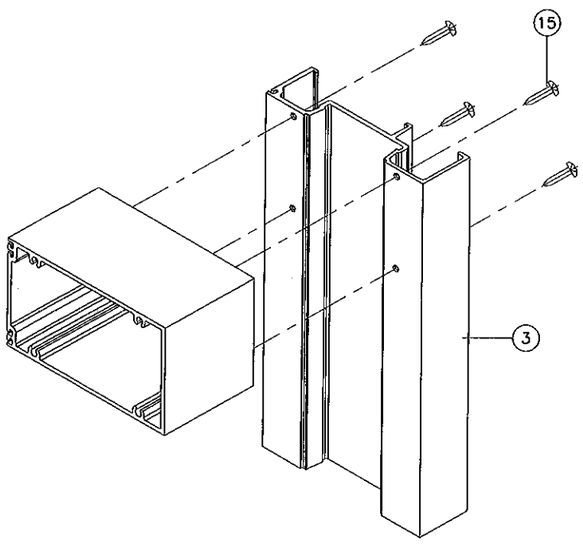


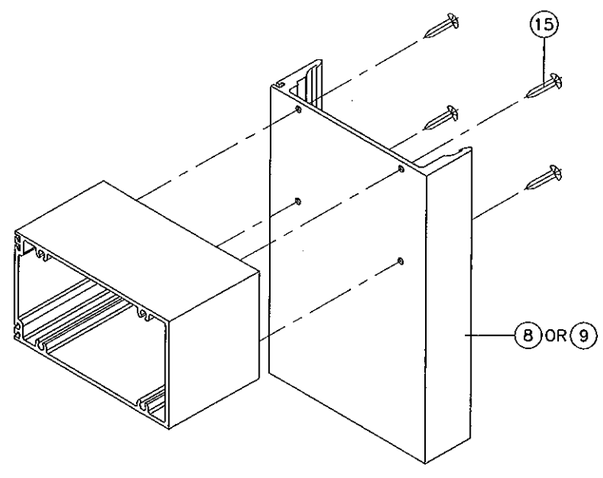


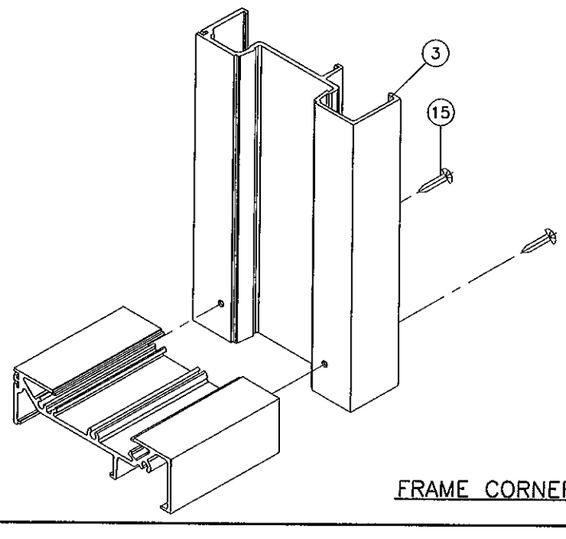


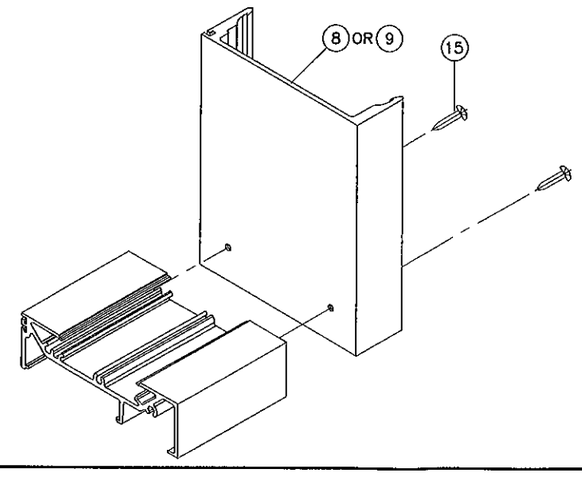


FRAME CORNERS

**PRODUCT REVIEWED**
**In complying with the Florida Building Code**
**Acceptance No.** 12-0223.36
**Expiration Date** 9/16/16
**By** Ishaq I. Hamid
**Miami Dade Product Control**

Engr: JAVAD AHMAD
CIVIL
FLA. PE # 70592
C.A.N. 3538
FEB 15 2012


**AL-FAROOQ CORPORATION**
ENGINEERS & PRODUCT DEVELOPMENT
1235 S.W. 87 AVE
MIAMI, FLORIDA 33174
TEL. (305) 264-8100 FAX. (305) 262-6978
STORE\W04-105CTC


PRO-TECH 7SG ALUM CURTAIN WALL SYSTEM (N.I.)


**CRAWFORD TRACEY CORPORATION**
3301 SW 13TH DRIVE
DEERFIELD BEACH, FL. 33442-8101
TEL. (954) 698-6888 FAX. (954) 698-6889


revisions:

| no | date | by | description |
|---|---|---|---|
| E | 08.19.08 | | NO CHANGE THIS SHEET |
| F | 11.11.10 | | GENERAL REVISION |
| G | 03.02.11 | | NO CHANGE THIS SHEET |
| H | 05.10.11 | | NO CHANGE THIS SHEET |
| I | 01.16.12 | | UPDATED TO 2010 FBC |

date: 12-30-04
scale: 3/8" = 1"
dr. by: HAMID
chk. by:

drawing no.
W04-105

sheet 17 of 17