MIAMI-DADE COUNTY
DEPARTMENT OF PERMITTING, ENVIRONMENT, AND REGULATORY AFFAIRS (PERA)
BOARD AND CODE ADMINISTRATION DIVISION

NOTICE OF ACCEPTANCE (NOA)

MIAMI-DADE COUNTY
PRODUCT CONTROL SECTION
11805 SW 26 Street, Room 208
Miami, Florida 33175-2474
T (786) 315-2590 F (786) 315-2599
www.miamidade.gov/pera/

Crawford Tracy Corporation
3301 S. W. 13th Drive
DeerField Beach, Fl. 33442

SCOPE:

This NOA is being issued under the applicable rules and regulations governing the use of construction materials. The documentation submitted has been reviewed and accepted by Miami-Dade County PERA -Product Control Section to be used in Miami Dade County and other areas where allowed by the Authority Having Jurisdiction (AHJ).

This NOA shall not be valid after the expiration date stated below. The Miami-Dade County Product Control Section (In Miami Dade County) and/or the AHJ (in areas other than Miami Dade County) reserve the right to have this product or material tested for quality assurance purposes. If this product or material fails to perform in the accepted manner, the manufacturer will incur the expense of such testing and the AHJ may immediately revoke, modify, or suspend the use of such product or material within their jurisdiction. PERA reserves the right to revoke this acceptance, if it is determined by Miami-Dade County Product Control Section that this product or material fails to meet the requirements of the applicable building code.

This product is approved as described herein, and has been designed to comply with the Florida Building Code, including the High Velocity Hurricane Zone.

DESCRIPTION: Series "Pro-Tech 7SG " Aluminum Glazed Curtain Wall System–SM Impact

APPROVAL DOCUMENT: Drawing No. **W04-104 Rev I**, titled "Pro-Tech 7SG Alum Curtain Wall System (SMI)", sheets 1 through, 4, 4.1, 4.2, 5, 5.1, 6 through 17 of 17, dated 12/29/04 and last revised on FEB 15, 2012, prepared by Al-Farooq Corporation, signed and sealed by Javad Ahmad, P. E., bearing the Miami-Dade County Product Control Revision stamp with the Notice of Acceptance number and expiration date by the Miami-Dade County Product Control Section.

MISSILE IMPACT RATING: Small Missile Impact Resistant

1. Mullion load capacity Max=120 PSF. Lower Design Pressure from mullion, glass and/or anchor shall control.
2. Installation to steel structure is limited as approved in NOA. Embedded steel stud not a part of this approval.
3. Min 1/8" metal thickness is required for installation into Metal substrate.

LABELING: Each unit shall bear a permanent label with the manufacturer's name or logo, city, state and series and following statement: "Miami-Dade County Product Control Approved", noted herein.

RENEWAL of this NOA shall be considered after a renewal application has been filed and there has been no change in the applicable building code negatively affecting the performance of this product.

TERMINATION of this NOA will occur after the expiration date or if there has been a revision or change in the materials, use, and/or manufacture of the product or process. Misuse of this NOA as an endorsement of any product, for sales, advertising or any other purposes shall automatically terminate this NOA. Failure to comply with any section of this NOA shall be cause for termination and removal of NOA.

ADVERTISEMENT: The NOA number preceded by the words Miami-Dade County, Florida, and followed by the expiration date may be displayed in advertising literature. If any portion of the NOA is displayed, then it shall be done in its entirety.

INSPECTION: A copy of this entire NOA shall be provided to the user by the manufacturer or its distributors and shall be available for inspection at the job site at the request of the Building Official.

This NOA **revises NOA # 10-1213.09** and consists of this page 1 and evidence pages E-1 & E-2, as well as approval document mentioned above.

The submitted documentation was reviewed by **Ishaq I. Chanda, P.E.**

MIAMI-DADE COUNTY APPROVED

5/17/12

NOTICE OF ACCEPTANCE: EVIDENCE SUBMITTED

A. DRAWINGS

1. Manufacturer's die drawings and sections (submitted in file # **10-1213.09**).
2. Drawing No. **W04-104 Rev I**, titled "Pro-Tech 7SG Alum Curtain Wall System (SMI)", sheets 1 through, 4, 4.1, 4.2, 5, 5.1, 6 through 17 of 17, dated 12/29/04 and last revised on FEB 15, 2012, prepared by Al-Farooq Corporation, signed and sealed by Javad Ahmad, P.E.

Note: This revision consists of FBC 2010 notes & optional alum alloy 6005A-T61addition only.

B. TESTS (Submitted under files # **10-1213.08/ 08-0415.05)**

1. Test reports on 1) Air Infiltration Test per FBC, TAS 202-94
   2) Uniform Static Air Pressure Test Loading per FBC, TAS 202-94
   3) Water Resistance Test per FBC, TAS 202-94
   4) Small Missile Impact Test per FBC, TAS 201-94
   5) Cyclic Loading Test per FBC, TAS 203-94

Along with installation diagram of aluminum glazed curtain wall system marked-up by American Test Lab of South Florida, Test Report No. **ATL 1111.01-08,** ATL **0619.01-08** and **ATL 0612.01-08,** all dated 01-28-10 and revised by addendum letters dated 11/09/10, signed and sealed by William R. Mehner, P.E. & Henry Hatem, P. E.

2. Test reports on 1) Air Infiltration Test per FBC, TAS 202-94
   2) Uniform Static Air Pressure Test Loading per FBC, TAS 202-94
   3) Water Resistance Test per FBC, TAS 202-94
   4) Large Missile Impact Test per FBC, TAS 201-94
   5) Small Missile Impact Test per FBC, TAS 201-94
   6) Cyclic Loading Test per FBC, TAS 203-94

Along with installation diagram of aluminum glazed curtain wall system marked-up by American Test Lab of South Florida, Test Report No. **ATL 0315.01-04 (LMI)** dated 08-19-04 and **ATL 0217.01-04 (SMI)** dated 08-23-04 and revised by addendum letter dated 01-30-06, both signed and sealed by William R. Mehner, P.E. & Henry Hatem, P. E. (transferred from file # **08-0415.05)**

3. Additional Test reports on
   1) Uniform Static Air Pressure Test, Loading per TAS 202-94
   2) Large Missile Impact Test per FBC, TAS 201-94
   3) Small Missile Impact Test per FBC, TAS 201-94
   4) Cyclic Loading Test per FBC, TAS 203-94

Along with installation diagram of aluminum glazed curtain wall system marked-up by American Test Lab of South Florida, Test Report No. **ATL 1129.01-04 (LMI)** dated 08-19-04, revised by addendum letter dated 01-30-06 and Test Report No. **ATL 0419.02-04 (SMI)**, dated 08-19-04, both signed & sealed by William R. Mehner, P.E. & Henry Hatem, and P. E. (transferred from file # **08-0415.05)**

4. Additional Test report **ATL-1130.01-07** dated 01/29/08 for insulated glazed C.W. Sys per TAS 201, 202 & 203, issued by American Test Lab, signed & sealed by William R. Mehner, P.E. & Henry Hatem, P. E. (transferred from file # **08-0415.05)**

5. Test report No. **ATL-0929.01-05** dated 09/29/05, issued by American Test Lab of South Florida to Crawford Tracy Corp., for 9/16" thk .060 Solutia PVB laminated glass per ANSI-97, signed & sealed by Henry Hatem, P. E.

C. CALCULATIONS

1. Anchor verification calculations and structural analysis, complying with FBC-2007, prepared by Al Farooq Corporation, dated 11/22/10, 03/03/11 and last revised on May 16, 2011, signed and sealed by Javad Ahmad, P.E. (Submitted under file # **10-1213.09**)
2. Glazing complies w/ ASTME-1300-02 & -04

Ishaq I. Chanda

Ishaq I. Chanda, P.E.
Product Control Examiner
NOA No 12-0223.37
Expiration Date: March 02, 2016
Approval Date: May 24, 2012

NOTICE OF ACCEPTANCE: EVIDENCE SUBMITTED

D. QUALITY ASSURANCE

1. Miami Dade Department of Permitting, Environment, and Regulatory Affairs (PERA).

E. MATERIAL CERTIFICATIONS

1. Mechanical properties of Aluminum Alloy 6005A-T61 by ALCO Venture Inc with min Fu (tensile)=38 ksi, min Fy(tensile)=35 ksi , min Fy (compressive)=35 ksi , min Fsu (tensile) and min E=10100 ksi.
2. Notice of Acceptance No. **11-0624.02** issued to E.I. DuPont DeNemours & Co., Inc. for their "**DuPont Sentry Glass ® interlayer**", expiring on 01/14/17.
3. Notice of Acceptance No. **09-0127.13** issued to Solutia Inc. for their "**Solutia interlayer for laminated Glass**", expiring on 03/04/14.

F. STATEMENTS

1. Statement letter of conformance to FBC 2010 and letter of no financial interest, prepared by Al Farooq Corporation, dated 01/16/12, signed and sealed by Javad Ahmad, P.E.
2. Statement letter dated FEB 04, 2010 issued by Key Mark Aluminum Extrusion for improved structural aluminum alloy 6005A with mechanical properties equal or surpass aluminum alloy 6105 & 6005 (ADM).
3. Statement letter of conformance to FBC 2007 and letter of no financial interest, prepared by Al-Farooq Corporation, dated 11/08/10, signed and sealed by Javad Ahmad, P.E.
4. Lab compliance as part of the above referenced test report.

G. OTHER

1. This NOA **revises** NOA # **10-1213.09**, expiring on March 02, 2016.
2. Test proposals dated 11/06/2003 & 08/27/07, approved by BCCO.

Ishaq I. Chanda

Ishaq I. Chanda, P.E.
Product Control Examiner
NOA No 12-0223.37
Expiration Date: March 02, 2016
Approval Date: May 24, 2012

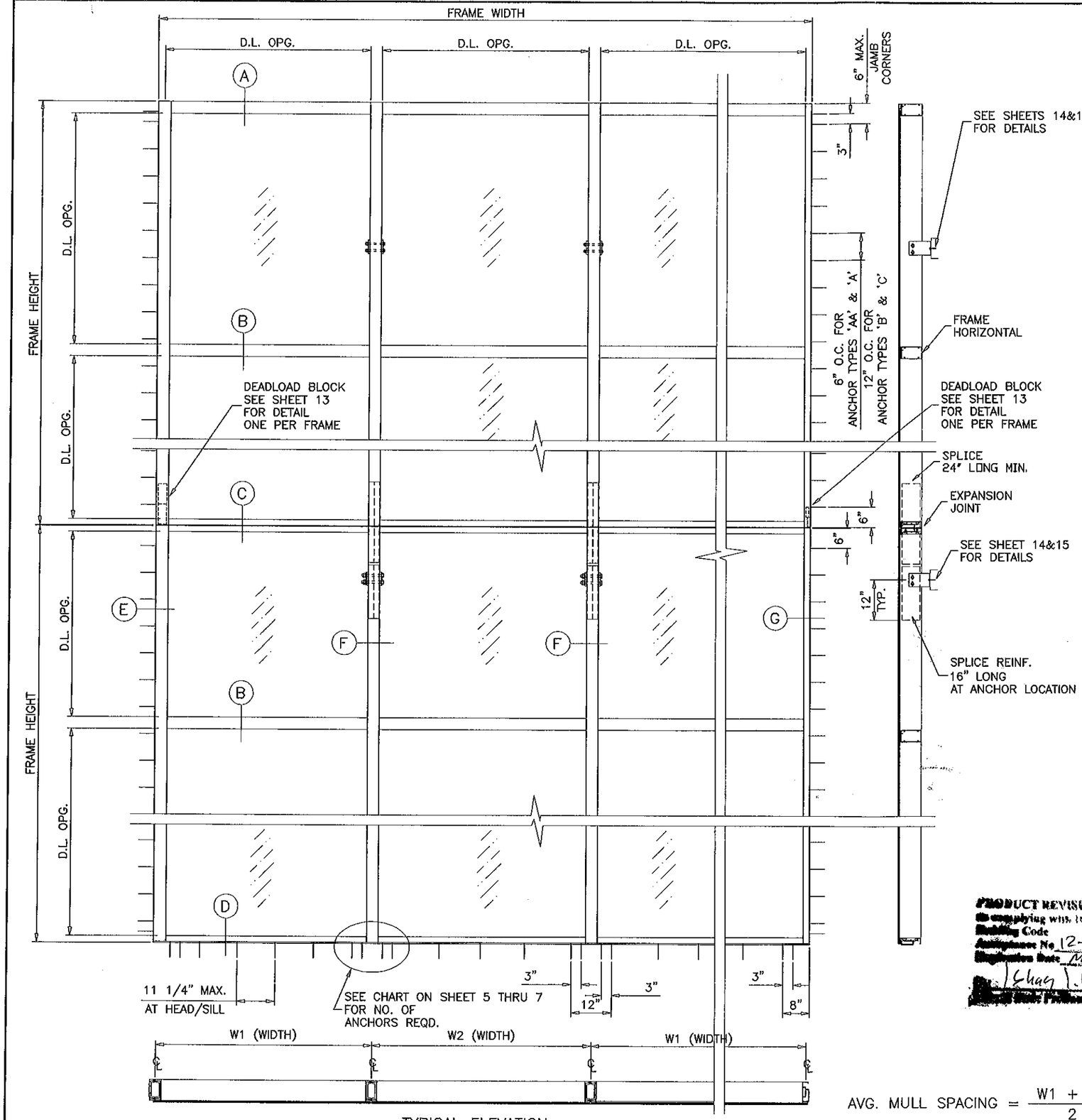

TYPICAL ELEVATION

$$\text{AVG. MULL SPACING} = \frac{W1 + W2}{2}$$

PRO-TECH 7SG ALUM CURTAIN WALL SYSTEM

THIS PRODUCT RATED FOR SMALL MISSILE IMPACT.
MIAMI-DADE COUNTY APPROVED IMPACT RESISTANT SHUTTERS REQUIRED FOR INSTALLATIONS UP TO 30 FT. OF GRADE.
SHUTTERS NOT REQD. FOR INSTALLATIONS ABOVE 30 FT. OF GRADE.

SEE SHEETS 2 THRU 8 FOR DESIGN LOAD RATING.

CODE REQUIREMENTS FOR SAFEGUARDS MUST BE OBSERVED.

THIS PRODUCT HAS BEEN DESIGNED AND TESTED TO COMPLY WITH THE REQUIREMENTS OF THE FLORIDA BUILDING CODE INCLUDING HIGH VELOCITY HURRICANE ZONE (HVHZ).

WOOD BUCKS BY OTHERS, MUST BE ANCHORED PROPERLY TO TRANSFER LOADS TO THE STRUCTURE.

ANCHORS SHALL BE AS LISTED, SPACED AS SHOWN ON DETAILS, ANCHORS EMBEDMENT TO BASE MATERIAL SHALL BE BEYOND WALL DRESSING OR STUCCO.

ANCHORING OR LOADING CONDITIONS NOT SHOWN IN THESE DETAILS ARE NOT PART OF THIS APPROVAL.

A LOAD DURATION INCREASE IS USED IN DESIGN OF ANCHORS INTO WOOD ONLY.

MATERIALS INCLUDING BUT NOT LIMITED TO STEEL/METAL SCREWS, THAT COME INTO CONTACT WITH OTHER DISSIMILAR MATERIALS SHALL MEET THE REQUIREMENTS OF THE FLORIDA BLDG. CODE SECTION 2003.8.4.

INSTRUCTIONS:

USE CHARTS AS FOLLOWS.

STEP 1 DETERMINE DESIGN WIND LOAD REQUIREMENT BASED ON WIND VELOCITY, BLDG. HEIGHT, WIND ZONE USING APPLICABLE ASCE 7 STANDARD.

STEP 2 CHECK MULLION CAPACITY FOR A GIVEN SPACING AND HEIGHT USING CHARTS ON SHEET 2 FOR SINGLE SPANS, AND CHARTS ON SHEET 3 FOR EQUAL MULTIPLE SPANS.

STEP 3 SEE CHART ON SHEET 4 THRU 4.2 FOR DESIGN LOAD CAPACITY OF DESIRED GLASS SIZE.

STEP 4 USING CHART ON SHEET 5, 5.1 THRU 7 SELECT ANCHOR OPTION WITH DESIGN RATING MORE THAN DESIGN LOAD SPECIFIED IN STEP 1 ABOVE.

STEP 5 FOR CURTAIN WALL INTERMEDIATE ANCHOR CAPACITY SEE SHEETS 14 AND 15.

STEP 6 THE LOWEST VALUE RESULTING FROM STEPS 2, 3, 4 AND 5 SHALL APPLY TO ENTIRE SYSTEM.

PRODUCT REVISED
In complying with the Florida Building Code
Application No. 12-0223-37
Registration Date: MAR 02 2016
Shaq I. Chand
[redacted]

LAMINATED GLASS
LAM. INSUL. GLASS
SMALL MISSILE IMPACT

Engr: JAVAD. AHMAD
CIVIL
FLA. PE # 70592
C.A/N. 3538
FEB 15 2012

AL-FAROOQ CORPORATION
ENGINEERS & PRODUCT DEVELOPMENT
1235 S.W. 87 AVE
MIAMI, FLORIDA 33174
TEL. (305) 264-8100 FAX. (305) 262-6978
STORE\W04-104CTC

PRO-TECH 7SG ALUM CURTAIN WALL SYSTEM (S.M.I.)
CRAWFORD TRACEY CORPORATION
3301 SW 13TH DRIVE
DEERFIELD BEACH, FL. 33442-8101
TEL. (954) 698-6888 FAX. (954) 698-6889

revisions:

no	date	by	description
E	08.19.08		NO CHANGE THIS SHEET
F	11.11.10		GENERAL REVISION
G	03.02.11		REV. PER BCCO COMMENTS
H	05.09.11		REV. PER BNC COMMENTS
I	01.16.12		UPDATED TO 2010 FBC

date: 12-29-04
scale: 3/8"=1'-0"
dr. by: HAMID
chk. by:

drawing no.
W04-104

MULLION LOAD CAPACITY - PSF
SINGLE SPANS (WITH OR WITHOUT INTERMEDIATE HORIZONTALS)

NOMINAL DIMS.		UNREINFORCED	ALUM REINF.	STEEL REINF.
WIDTH (W)	FRAME HEIGHT	EXT.(+) & INT.(−)	EXT.(+) & INT.(−)	EXT.(+) & INT.(−)
36"	120"	120.0	160.0	120.0
39"		120.0	160.0	120.0
42"		120.0	160.0	120.0
45"		120.0	160.0	120.0
48"		120.0	160.0	120.0
51"		117.5	160.0	120.0
54"		111.0	160.0	120.0
57"		105.1	160.0	120.0
60"		99.9	160.0	120.0
63"		–	120.0	120.0
66"		–	120.0	120.0
69"		–	120.0	120.0
72"		–	120.0	120.0
36"	126"	–	120.0	120.0
39"		–	120.0	120.0
42"		–	120.0	120.0
45"		–	120.0	120.0
48"		–	120.0	120.0
51"		–	120.0	120.0
54"		–	120.0	120.0
57"		–	120.0	120.0
60"		–	120.0	120.0
63"		–	120.0	120.0
66"		–	120.0	120.0
69"		–	120.0	120.0
72"		–	120.0	120.0
36"	132"	–	120.0	120.0
39"		–	120.0	120.0
42"		–	120.0	120.0
45"		–	120.0	120.0
48"		–	120.0	120.0
51"		–	120.0	120.0
54"		–	120.0	120.0
57"		–	120.0	120.0
60"		–	120.0	120.0
63"		–	120.0	120.0
66"		–	114.6	120.0
69"		–	109.6	120.0
72"		–	105.0	120.0
36"	138"	–	120.0	120.0
39"		–	120.0	120.0
42"		–	120.0	120.0
45"		–	120.0	120.0
48"		–	120.0	120.0
51"		–	120.0	120.0
54"		–	120.0	120.0
57"		–	116.1	120.0
60"		–	110.3	120.0
63"		–	105.1	120.0
66"		–	100.3	120.0
69"		–	95.9	120.0
72"		–	91.9	118.7

MULLION LOAD CAPACITY - PSF
SINGLE SPANS (WITH OR WITHOUT INTERMEDIATE HORIZONTALS)

NOMINAL DIMS.		UNREINFORCED	ALUM REINF.	STEEL REINF.
WIDTH (W)	FRAME HEIGHT	EXT.(+) & INT.(−)	EXT.(+) & INT.(−)	EXT.(+) & INT.(−)
36"	144"	–	120.0	120.0
39"		–	120.0	120.0
42"		–	120.0	120.0
45"		–	120.0	120.0
48"		–	120.0	120.0
51"		–	114.2	120.0
54"		–	107.9	120.0
57"		–	102.2	120.0
60"		–	97.1	120.0
63"		–	92.5	120.0
66"		–	88.3	118.9
69"		–	84.4	113.7
36"	150"	–	120.0	120.0
39"		–	120.0	120.0
42"		–	120.0	120.0
45"		–	114.5	120.0
48"		–	107.4	120.0
51"		–	101.1	120.0
54"		–	95.4	120.0
57"		–	90.4	120.0
60"		–	85.9	120.0
63"		–	81.8	114.8
66"		–	78.1	109.6
36"	156"	–	120.0	120.0
39"		–	117.5	120.0
42"		–	109.1	120.0
45"		–	101.8	120.0
48"		–	95.5	120.0
51"		–	89.8	120.0
54"		–	84.8	120.0
57"		–	80.4	117.3
60"		–	76.4	111.5
63"		–	72.7	106.1
36"	162"	–	113.6	120.0
39"		–	104.9	120.0
42"		–	97.4	120.0
45"		–	90.9	120.0
48"		–	85.2	120.0
51"		–	80.2	120.0
54"		–	75.8	114.8
57"		–	71.8	108.8
60"		–	68.2	103.4
36"	168"	–	101.9	120.0
39"		–	94.1	120.0
42"		–	87.3	120.0
45"		–	81.5	120.0
48"		–	76.4	120.0
51"		–	71.9	113.1
54"		–	67.9	106.8
57"		–	64.4	101.2
60"		–	61.1	96.1

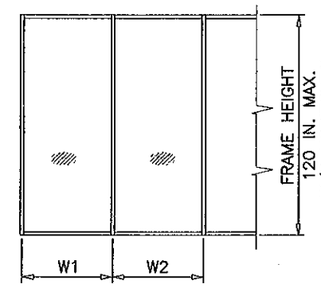

WIDTH (W) = W1
AT FRAME JAMB

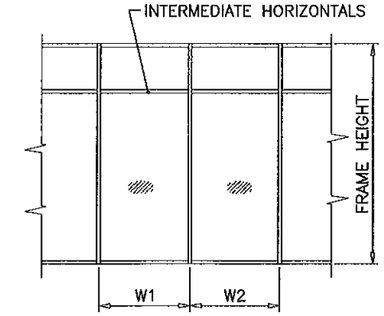

WIDTH (W) = $\frac{W1 + W2}{2}$
AT FRAME MULLION

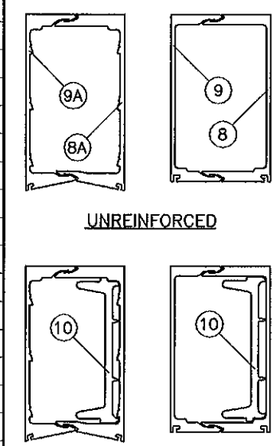

UNREINFORCED

ALUM REINF.
L = MULL LENGTH − 4"

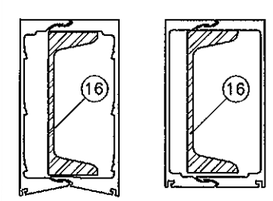

STEEL REINF.
L = MULL LENGTH − 6"

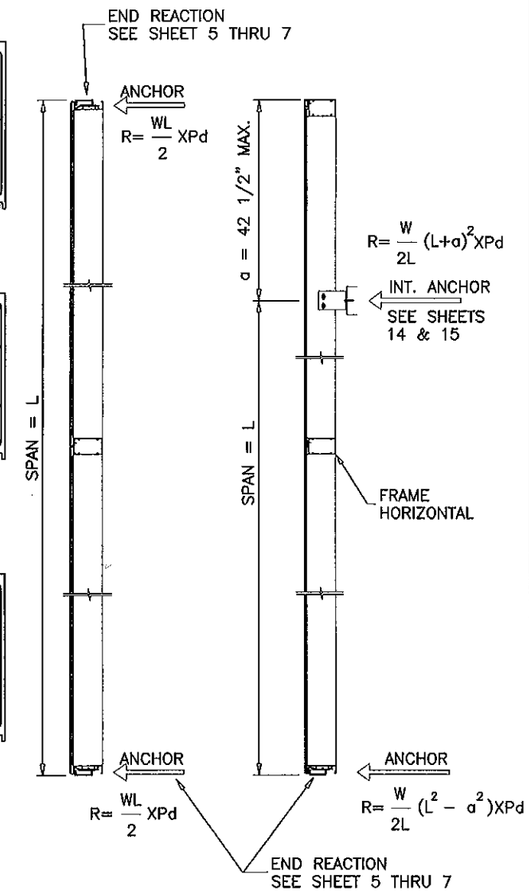

INTERMEDIATE ANCHOR WIND AND DEAD LOAD MUST NOT EXCEED INTERMEDIATE ANCHOR CAPACITY PER SHEETS 14 & 15.

Engr: JAVAD AHMAD
CIVIL
FLA. PE # 70592
C.A.N. 3536
FEB 15 2012

PRODUCT REVISED
in complying with the Florida Building Code
Acceptance No 12-0223.37
Expiration Date 3/3/17
Miami Dade Product Control

AL-FAROOQ CORPORATION
ENGINEERS & PRODUCT DEVELOPMENT
1235 S.W. 87 AVE
MIAMI, FLORIDA 33174
TEL. (305) 264-8100 FAX. (305) 262-6978
STORE\W04-104CTC

PRO-TECH TSG ALUM CURTAIN WALL SYSTEM (S.M.I.)

CRAWFORD TRACEY CORPORATION
3301 SW 13TH DRIVE
DEERFIELD BEACH, FL. 33442-8101
TEL. (954) 698-6888 FAX. (954) 698-6889

revisions:

no	date	by	description
E	08.19.08		NO CHANGE THIS SHEET
F	11.11.10		GENERAL REVISION
G	03.02.11		REV. PER BCCO COMMENTS
H	05.09.11		NO CHANGE THIS SHEET
I	01.16.12		NO CHANGE THIS SHEET

date: 12-29-04
scale: 3/8"=1'-0"
dr. by: HAMID
chk. by:

drawing no.
W04-104

MULLION LOAD CAPACITY - PSF
MULTIPLE SPANS

AVG. MULL SPACING	SPAN = L	UNREINFORCED EXT.(+)/INT.(-)	ALUM REINF. EXT.(+)/INT.(-)
36"	120"	120.0	120.0
42"		120.0	120.0
48"		120.0	120.0
54"		120.0	120.0
60"		116.7	120.0
66"		106.1	120.0
72"		97.2	112.0
36"	126"	120.0	120.0
42"		120.0	120.0
48"		120.0	120.0
54"		120.0	120.0
60"		110.1	120.0
66"		100.1	116.4
72"		91.7	106.7
36"	132"	120.0	120.0
42"		120.0	120.0
48"		120.0	120.0
54"		116.0	120.0
60"		104.4	120.0
66"		94.9	111.1
72"		87.0	101.8
36"	138"	120.0	120.0
42"		120.0	120.0
48"		120.0	120.0
54"		110.3	120.0
60"		99.3	116.9
66"		90.3	106.2
72"		82.8	97.4
36"	144"	120.0	120.0
42"		120.0	120.0
48"		118.4	120.0
54"		105.2	120.0
60"		94.7	112.0
66"		86.1	101.8
36"	150"	120.0	120.0
42"		120.0	120.0
48"		113.2	120.0
54"		100.6	119.5
60"		90.5	107.5
66"		82.3	97.7
36"	156"	120.0	120.0
42"		120.0	120.0
48"		108.4	120.0
54"		96.3	114.9
60"		86.7	103.4
36"	162"	120.0	120.0
42"		118.9	120.0
48"		104.0	120.0
54"		92.5	110.6
60"		83.2	99.6
36"	168"	120.0	120.0
42"		113.6	120.0
48"		99.4	120.0
54"		88.4	106.7
60"		79.5	96.0

INTERMEDIATE ANCHOR WIND AND DEAD LOAD MUST NOT EXCEED INTERMEDIATE ANCHOR CAPACITY PER SHEETS 14 & 15.

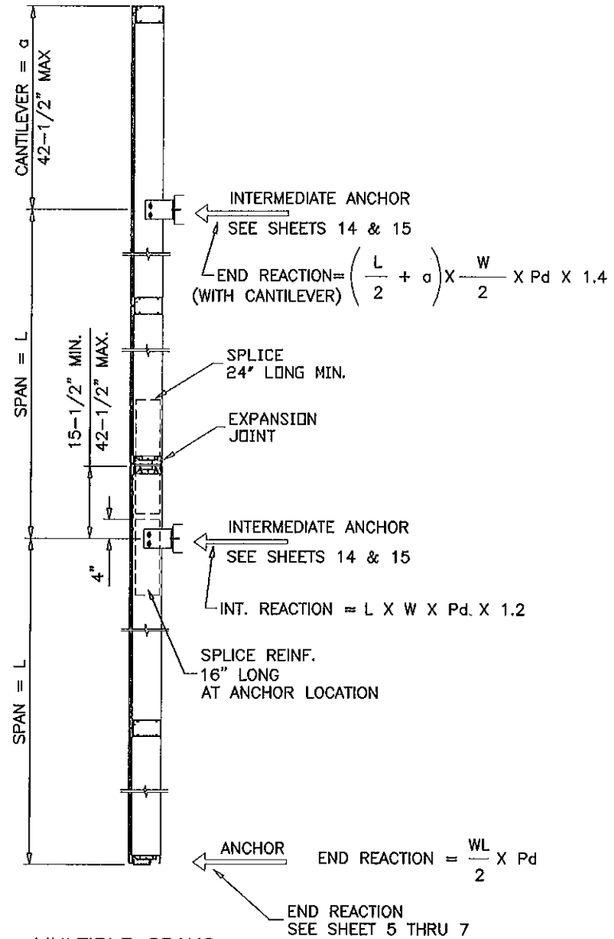

MULTIPLE SPANS

MULTIPLE SPANS WITH OR WITHOUT CANTILEVER
USE TABLE ON THIS SHEET.

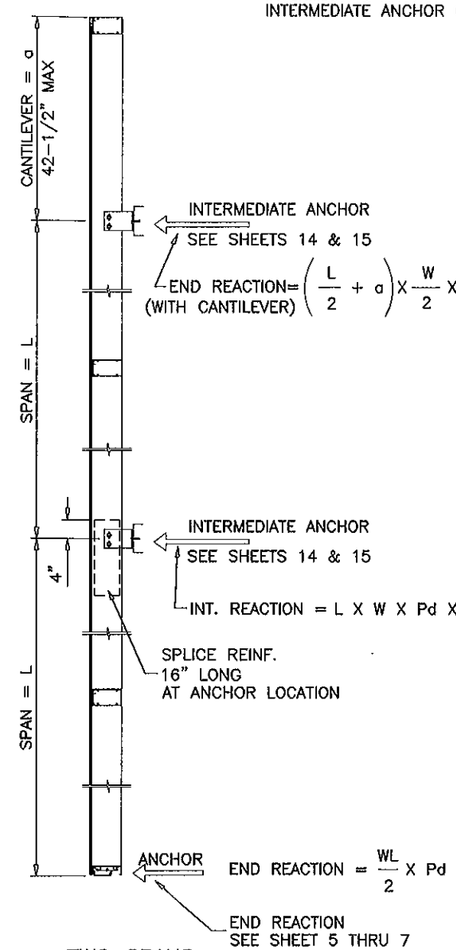

TWO SPANS

TWO SPANS WITH CANTILEVER
AND WITHOUT SPLICE/EXPANSION JOINT
USE TABLE ON THIS SHEET.

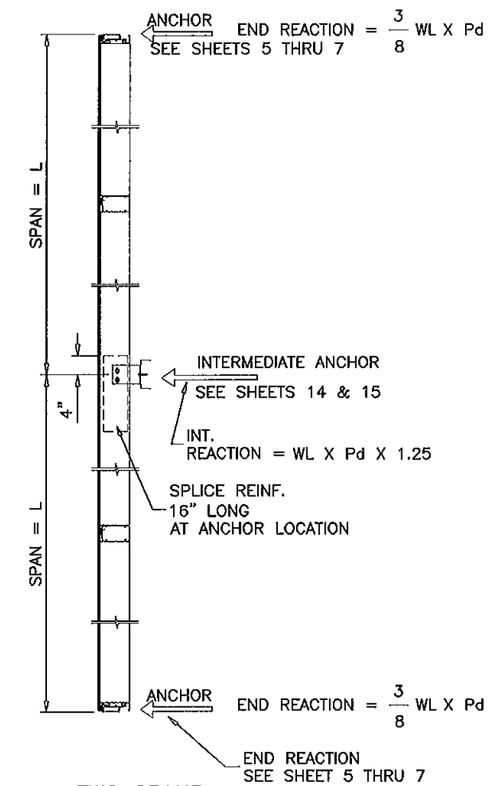

TWO SPANS

TWO SPANS WITHOUT CANTILEVER
AND WITHOUT SPLICE/EXPANSION JOINT
USE TABLE ON THIS SHEET.

UNEQUAL SPANS TO BE CHECKED ON JOB TO JOB BASIS

END REACTIONS MAY CHANGE WITH LOCATION OF
EXPANSION JOINT AND LENGTH OF CANTILEVER
WORST CONDITION SHOWN.

NOTE:
TWO SPANS CONTINUOUS MULLION WITHOUT
OVERHANG CAN BE INSTALLED.
FOR EACH SPAN USE TABLE ON THIS SHEET.

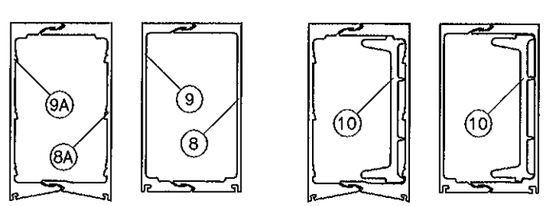

UNREINFORCED

ALUM REINF.
L = MULL LENGTH - 4"

PRODUCT REVIEWED
Complying with the Florida
Building Code
Application No. 12-0223.37
Expiration Date 3/2/16
By Shag Chauda
Miami Dade Product Control

Engr: JAVAD AHMAD
CIVIL
FLA. PE # 70592
C.A.N. 3538
FEB 15 2012

AL-FAROOQ CORPORATION
ENGINEERS & PRODUCT DEVELOPMENT
1235 S.W. 87 AVE
MIAMI, FLORIDA 33174
TEL. (305) 264-8100 FAX. (305) 262-6978
STORE\W04-104CTC

PRO-TECH 7SG ALUM CURTAIN WALL SYSTEM (S.M.I.)

CRAWFORD TRACEY CORPORATION
3301 SW 13TH DRIVE
DEERFIELD BEACH, FL. 33442-8101
TEL. (954) 698-6888 FAX. (954) 698-6889

revisions:

no	date	by	description
E	08.19.08		NO CHANGE THIS SHEET
F	11.11.10		NO CHANGE THIS SHEET
G	03.02.11		REV. PER BCCO COMMENTS
H	05.09.11		REV. PER BNC COMMENTS
I	01.16.12		NO CHANGE THIS SHEET

date: 12-29-04
scale: 3/8"=1'-0"
dr. by: HAMID
chk. by:

drawing no.
W04-104

GLASS LOAD CAPACITY – PSF			
NOMINAL DIMS.		GLASS TYPE 'A'	GLASS TYPE 'A1'
D.L.O. WIDTH	D.L.O. HEIGHT	EXT. (+) INT. (–)	EXT. (+) INT. (–)
42"	78"	120.0	120.0
45"		120.0	120.0
48"		120.0	120.0
51"		120.0	120.0
54"		120.0	120.0
57"		120.0	120.0
60"		120.0	120.0
63"		120.0	120.0
66"		120.0	120.0
69"		119.2	119.2
72"		114.4	114.4
75"		110.1	110.1
78"		106.0	106.0
42"	84"	120.0	120.0
45"		120.0	120.0
48"		120.0	120.0
51"		120.0	120.0
54"		120.0	120.0
57"		120.0	120.0
60"		120.0	120.0
63"		120.0	120.0
66"		120.0	120.0
69"		119.2	119.2
72"		114.4	114.4
75"		110.1	110.1
78"		106.0	106.0
42"	90"	120.0	120.0
45"		120.0	120.0
48"		120.0	120.0
51"		120.0	120.0
54"		120.0	120.0
57"		120.0	120.0
60"		120.0	120.0
63"		120.0	120.0
66"		118.5	120.0
69"		115.1	119.2
72"		111.9	114.4
42"	96"	120.0	120.0
45"		120.0	120.0
48"		120.0	120.0
51"		120.0	120.0
54"		120.0	120.0
57"		120.0	120.0
60"		117.2	120.0
63"		113.5	120.0
66"		110.3	116.0
42"	102"	120.0	120.0
45"		120.0	120.0
48"		120.0	120.0
51"		120.0	120.0
54"		117.7	120.0
57"		113.5	120.0
60"		109.4	116.0
63"		105.9	112.0

GLASS LOAD CAPACITY – PSF			
NOMINAL DIMS.		GLASS TYPE 'A'	GLASS TYPE 'A1'
D.L.O. WIDTH	D.L.O. HEIGHT	EXT. (+) INT. (–)	EXT. (+) INT. (–)
42"	108"	120.0	120.0
45"		120.0	120.0
48"		120.0	120.0
51"		116.9	120.0
54"		111.3	119.0
57"		106.4	113.0
60"		102.5	109.0
42"	114"	120.0	120.0
45"		120.0	120.0
48"		118.4	120.0
51"		111.8	119.0
54"		105.6	112.0
57"		100.3	107.0
42"	120"	120.0	120.0
45"		120.0	120.0
48"		114.3	120.0
51"		106.6	115.0
54"		100.3	108.0
42"	126"	120.0	120.0
45"		118.7	120.0
48"		109.9	119.0
51"		102.4	111.0
42"	132"	120.0	120.0
45"		115.2	120.0
48"		106.3	116.0
42"	138"	120.0	120.0
45"		112.9	120.0
42"	144'	120.0	120.0
45"		111.6	120.0
42"	150"	120.0	120.0
56–1/2"	116–1/2"	100.0	106.0

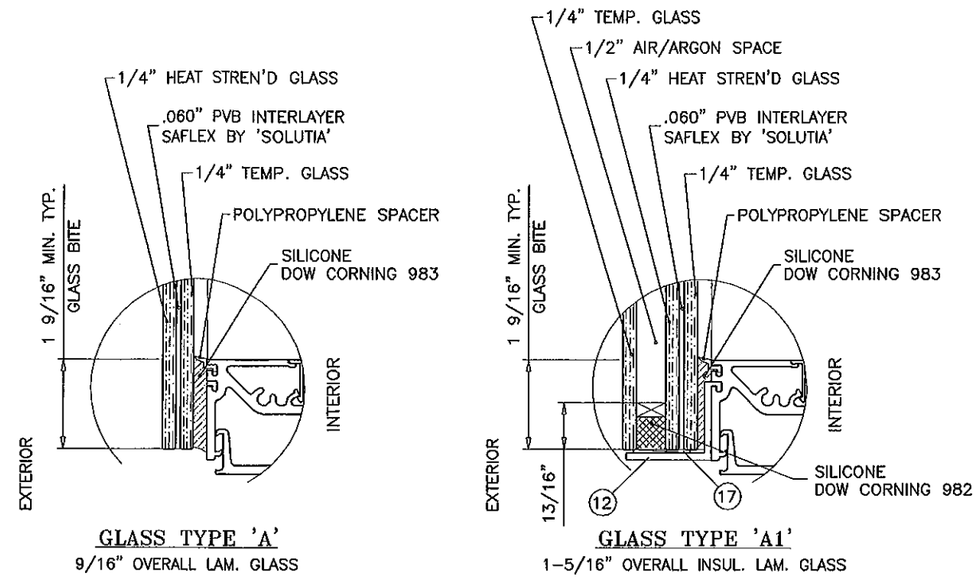

GLAZING OPTIONS

NOTE:
OPTION OF .019" CERAMIC FRIT ON ROOM SIDE SURFACE OF INNER PANE GLASS.
MAX. GLASS AREA LIMITED TO 22.2 SQ. FT. WITH ASPECT RATIO EQUAL OR LESS THAN 5.

CURTAIN WALL SYSTEM WITH GLASS TYPES 'A' COMPLIES WITH REQUIREMENTS OF ANSI Z97.1.

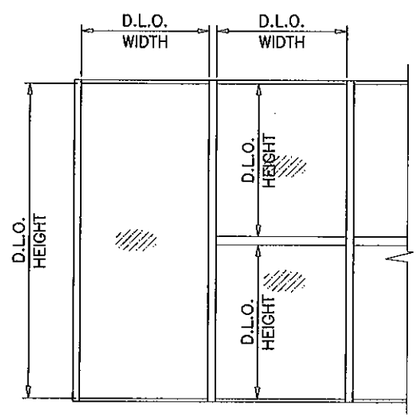

NOTE:
GLASS CAPACITIES ON THIS SHEET ARE BASED ON ASTM E1300–04 (3 SEC. GUSTS).

PRODUCT REVISED
as complying with the Florida Building Code
Acceptance No. 12-0223.37
Expiration Date 3/2/16
By Ishwar T. Chand
Miami-Dade Product Control

Engr: JAVAD AHMAD
CIVIL
FLA. PE # 70592
C.A.N. 3638
FEB 15 2012

AL-FAROOQ CORPORATION
ENGINEERS & PRODUCT DEVELOPMENT
1235 S.W. 87 AVE
MIAMI, FLORIDA 33174
TEL. (305) 264-8100 FAX. (305) 262-6978

STORE\W04–104CTC

PRO-TECH 7SG ALUM CURTAIN WALL SYSTEM (S.M.I.)

CRAWFORD TRACEY CORPORATION
3301 SW 13TH DRIVE
DEERFIELD BEACH, FL. 33442–8101
TEL (954) 698–6888 FAX. (954) 698–6889

revisions:

no	date	by	description
E	08.19.08		REV. PER BCCO COMMENTS
F	11.11.10		GENERAL REVISION
G	03.02.11		REV. PER BCCO COMMENTS
H	05.09.11		REV. PER BNC COMMENTS
I	01.16.12		NO CHANGE THIS SHEET

date: 12–29–04
scale: 3/8" = 1"
dr. by: HAMID
chk. by:

drawing no.
W04–104

GLASS LOAD CAPACITY - PSF					
NOMINAL DIMS.		GLASS TYPE 'B'		GLASS TYPE 'B1'	
D.L.O. WIDTH	D.L.O. HEIGHT	EXT.(+)	INT.(−)	EXT.(+)	INT.(−)
42"	78"	120.0	120.0	120.0	120.0
45"		120.0	120.0	120.0	120.0
48"		120.0	120.0	120.0	120.0
51"		120.0	120.0	120.0	120.0
54"		120.0	120.0	120.0	120.0
57"		120.0	120.0	120.0	120.0
60"		120.0	120.0	120.0	120.0
63"		120.0	120.0	120.0	120.0
66"		120.0	120.0	120.0	120.0
69"		119.2	119.2	119.2	119.2
72"		114.4	114.4	114.4	114.4
75"		110.1	110.1	110.1	110.1
78"		106.0	106.0	106.0	106.0
42"	84"	120.0	120.0	120.0	120.0
45"		120.0	120.0	120.0	120.0
48"		120.0	120.0	120.0	120.0
51"		120.0	120.0	120.0	120.0
54"		120.0	120.0	120.0	120.0
57"		120.0	120.0	120.0	120.0
60"		120.0	120.0	120.0	120.0
63"		120.0	120.0	120.0	120.0
66"		120.0	120.0	120.0	120.0
69"		119.2	119.2	119.2	119.2
72"		114.4	114.4	114.4	114.4
75"		110.1	110.1	110.1	110.1
78"		106.0	106.0	106.0	106.0
42"	90"	120.0	120.0	120.0	120.0
45"		120.0	120.0	120.0	120.0
48"		120.0	120.0	120.0	120.0
51"		120.0	120.0	120.0	120.0
54"		120.0	120.0	120.0	120.0
57"		120.0	120.0	120.0	120.0
60"		120.0	120.0	120.0	120.0
63"		120.0	120.0	120.0	120.0
66"		118.0	118.0	120.0	120.0
69"		115.0	115.0	119.2	119.2
72"		111.0	111.0	114.4	114.4
42"	96"	120.0	120.0	120.0	120.0
45"		120.0	120.0	120.0	120.0
48"		120.0	120.0	120.0	120.0
51"		120.0	120.0	120.0	120.0
54"		120.0	120.0	120.0	120.0
57"		120.0	120.0	120.0	120.0
60"		119.0	119.0	120.0	120.0
63"		115.0	115.0	119.2	119.2
66"		111.0	111.0	114.4	114.4
42"	102"	120.0	120.0	120.0	120.0
45"		120.0	120.0	120.0	120.0
48"		120.0	120.0	120.0	120.0
51"		120.0	120.0	120.0	120.0
54"		120.0	120.0	120.0	120.0
57"		116.0	116.0	119.1	119.1
60"		111.0	111.0	115.2	115.2
63"		107.0	107.0	111.8	111.8

GLASS LOAD CAPACITY - PSF					
NOMINAL DIMS.		GLASS TYPE 'B'		GLASS TYPE 'B1'	
D.L.O. WIDTH	D.L.O. HEIGHT	EXT.(+)	INT.(−)	EXT.(+)	INT.(−)
42"	108"	120.0	120.0	120.0	120.0
45"		120.0	120.0	120.0	120.0
48"		120.0	120.0	120.0	120.0
51"		120.0	120.0	118.9	118.9
54"		114.0	114.0	117.1	117.1
57"		108.0	108.0	112.1	112.1
60"		104.0	104.0	106.3	106.3
42"	114"	120.0	120.0	120.0	120.0
45"		120.0	120.0	120.0	120.0
48"		120.0	120.0	120.0	120.0
51"		114.0	114.0	116.7	116.7
54"		107.0	107.0	110.8	110.8
57"		102.0	102.0	103.3	103.3
42"	120"	120.0	120.0	120.0	120.0
45"		120.0	120.0	120.0	120.0
48"		116.0	116.0	119.0	119.0
51"		110.0	110.0	111.3	111.3
54"		103.0	103.0	102.5	102.5
42"	126"	120.0	120.0	120.0	120.0
45"		120.0	120.0	120.0	120.0
48"		113.0	113.0	114.2	114.2
51"		106.0	106.0	106.6	106.6
42"	132"	120.0	120.0	120.0	120.0
45"		119.0	119.0	120.0	120.0
48"		110.0	110.0	110.3	110.3
42"	138"	120.0	120.0	120.0	120.0
45"		116.0	116.0	116.8	116.8
42"	144'	120.0	120.0	120.0	120.0
45"		115.0	115.0	113.9	113.9
42"	150"	120.0	120.0	120.0	120.0
56-1/2"	116-1/2"	101.0	101.0	102.0	102.0

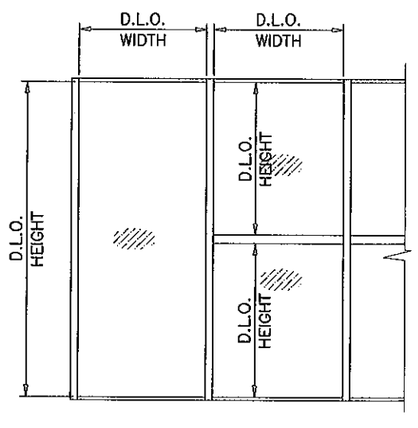

NOTE:
GLASS CAPACITIES ON THIS SHEET ARE BASED ON ASTM E1300-04 (3 SEC. GUSTS).

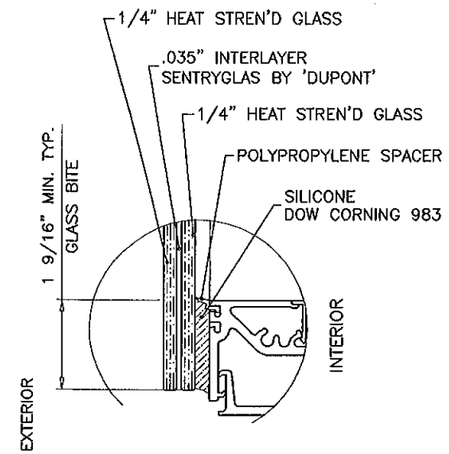

GLASS TYPE 'B'
9/16" OVERALL LAM. GLASS

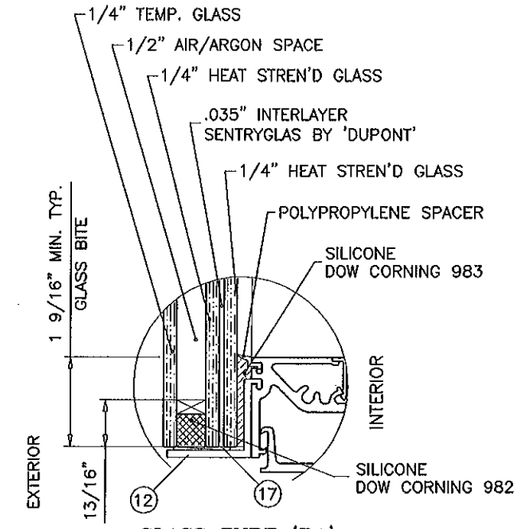

GLASS TYPE 'B1'
1-5/16" OVERALL INSUL. LAM. GLASS

GLAZING OPTIONS

NOTE:
OPTION OF .019" CERAMIC FRIT ON ROOM SIDE SURFACE OF INNER PANE GLASS.
MAX. GLASS AREA LIMITED TO 22.2 SQ. FT. WITH ASPECT RATIO EQUAL OR LESS THAN 5.

PRODUCT REVISED
as complying with the Florida Building Code
Acceptance No. 12-0223.37
Expiration Date 3/2/16
Sheryl Chanda
Product Control

Engr: JAVAD AHMAD
CIVIL
FLA. PE # 70592
C.A.N. 3538
FEB 15 2012

AL-FAROOQ CORPORATION
ENGINEERS & PRODUCT DEVELOPMENT
1235 S.W. 87 AVE
MIAMI, FLORIDA 33174
TEL. (305) 264-8100 FAX. (305) 262-6978
STORE\W04-104CTC

PRO-TECH 7SG ALUM CURTAIN WALL SYSTEM (S.M.I.)

CRAWFORD TRACEY CORPORATION
3301 SW 13TH DRIVE
DEERFIELD BEACH, FL. 33442-8101
TEL. (954) 698-6888 FAX. (954) 698-6889

revisions:

no	date	by	description
F	11.11.10		GENERAL REVISION
G	03.02.11		REV. PER BCCO COMMENTS
H	05.09.11		REV. PER BNC COMMENTS
I	01.16.12		UPDATED TO 2010 FBC

date: 12-29-04
scale: 3/8" = 1"
dr. by: HAMID
chk. by:

drawing no.
W04-104

sheet 4.1 of 17

GLASS LOAD CAPACITY - PSF					
NOMINAL DIMS.		GLASS TYPE 'C'		GLASS TYPE 'C1'	
D.L.O. WIDTH	D.L.O. HEIGHT	EXT.(+)	INT.(−)	EXT.(+)	INT.(−)
42"	78"	160.0	160.0	160.0	150.0
45"		160.0	160.0	160.0	150.0
48"		160.0	160.0	160.0	150.0
51"		158.5	158.5	158.5	150.0
54"		150.3	150.3	150.3	150.0
57"		142.8	142.8	142.8	142.8
60"		136.1	136.1	136.1	136.1
63"		129.9	129.9	129.9	129.9
66"		124.3	124.3	124.3	124.3
69"		119.2	119.2	119.2	119.2
72"		114.4	114.4	114.4	114.4
75"		110.1	110.1	110.1	110.1
78"		106.0	106.0	106.0	106.0
42"	84"	160.0	160.0	160.0	150.0
45"		160.0	160.0	160.0	150.0
48"		160.0	160.0	160.0	150.0
51"		158.5	158.5	158.5	150.0
54"		150.3	150.3	150.3	150.0
57"		142.8	142.8	142.8	142.8
60"		136.1	136.1	136.1	136.1
63"		129.9	129.9	129.9	129.9
66"		124.3	124.3	124.3	124.3
69"		119.2	119.2	119.2	119.2
72"		114.4	114.4	114.4	114.4
75"		110.1	110.1	110.1	110.1
78"		106.0	106.0	106.0	106.0
42"	90"	160.0	160.0	160.0	150.0
45"		160.0	160.0	160.0	150.0
48"		160.0	160.0	160.0	150.0
51"		158.5	158.5	158.5	150.0
54"		150.3	150.3	150.3	150.0
57"		142.8	142.8	142.8	142.8
60"		136.1	136.1	136.1	136.1
63"		129.9	129.9	129.9	129.9
66"		124.3	124.3	124.3	124.3
69"		119.2	119.2	119.2	119.2
72"		114.4	114.4	114.4	114.4
42"	96"	160.0	160.0	160.0	150.0
45"		160.0	160.0	160.0	150.0
48"		160.0	160.0	160.0	150.0
51"		158.5	158.5	158.5	150.0
54"		150.3	150.3	150.3	150.0
57"		142.8	142.8	142.8	142.8
60"		136.1	136.1	136.1	136.1
63"		129.9	129.9	129.9	129.9
66"		124.3	124.3	124.3	124.3
42"	102"	160.0	160.0	160.0	150.0
45"		160.0	160.0	160.0	150.0
48"		160.0	160.0	160.0	150.0
51"		158.5	158.5	158.5	150.0
54"		150.3	150.3	150.3	150.0
57"		142.8	142.8	142.8	142.8
60"		136.1	136.1	136.1	136.1
63"		129.9	129.9	129.9	129.9

GLASS LOAD CAPACITY - PSF					
NOMINAL DIMS.		GLASS TYPE 'C'		GLASS TYPE 'C1'	
D.L.O. WIDTH	D.L.O. HEIGHT	EXT.(+)	INT.(−)	EXT.(+)	INT.(−)
42"	108"	160.0	160.0	160.0	150.0
45"		160.0	160.0	160.0	150.0
48"		160.0	160.0	160.0	150.0
51"		158.5	158.5	158.5	150.0
54"		150.3	150.3	150.3	150.0
57"		142.8	142.8	142.8	142.8
60"		136.1	136.1	136.1	136.1
42"	114"	160.0	160.0	160.0	150.0
45"		160.0	160.0	160.0	150.0
48"		160.0	160.0	160.0	150.0
51"		158.5	158.5	158.5	150.0
54"		150.3	150.3	150.3	150.0
57"		142.8	142.8	142.8	142.8
42"	120"	160.0	160.0	160.0	150.0
45"		160.0	160.0	160.0	150.0
48"		160.0	160.0	160.0	150.0
51"		158.5	158.5	158.5	150.0
54"		150.3	150.3	150.3	150.0
42"	126"	160.0	160.0	160.0	150.0
45"		160.0	160.0	160.0	150.0
48"		160.0	160.0	160.0	150.0
51"		158.5	158.5	158.5	150.0
42"	132"	160.0	160.0	160.0	150.0
45"		160.0	160.0	160.0	150.0
48"		160.0	160.0	160.0	150.0
42"	138"	160.0	160.0	160.0	150.0
45"		160.0	160.0	160.0	150.0
42"	144'	160.0	160.0	160.0	150.0
45"		160.0	160.0	160.0	150.0
42"	150"	160.0	160.0	160.0	150.0
56-1/2"	116-1/2"	144.0	144.0	144.0	144.0

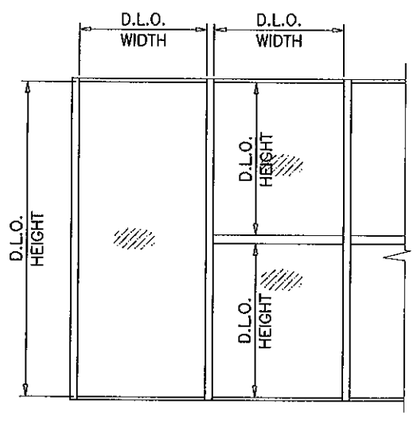

NOTE:
GLASS CAPACITIES ON THIS SHEET ARE BASED ON ASTM E1300-04 (3 SEC. GUSTS).

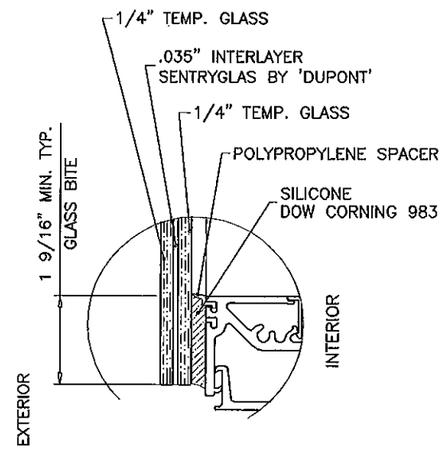

GLASS TYPE 'C'
9/16" OVERALL LAM. GLASS

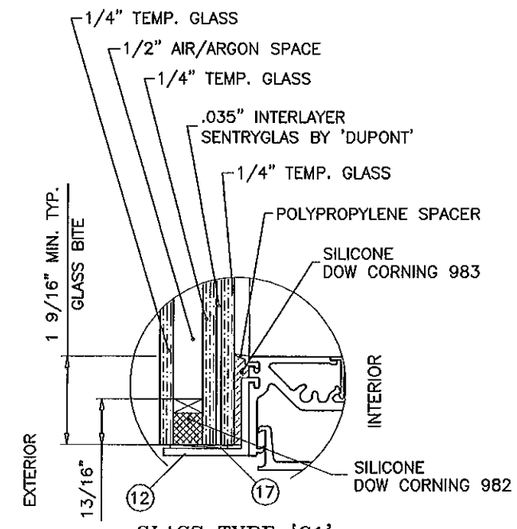

GLASS TYPE 'C1'
1-5/16" OVERALL INSUL. LAM. GLASS

GLAZING OPTIONS

PRODUCT REVISED
as complying with the Florida Building Code
Acceptance No. 12-0223.37
Expiration Date 3/2/16
By Ishaq I. Chan
Board Dade Product Control

NOTE:
OPTION OF .019" CERAMIC FRIT ON ROOM SIDE SURFACE OF INNER PANE GLASS.
MAX. GLASS AREA LIMITED TO 22.2 SQ. FT. WITH ASPECT RATIO EQUAL OR LESS THAN 5.

Engr: JAVAD AHMAD
CIVIL
FLA. PE # 70592
C.A.N. 2538
FEB 15 2012

AL-FAROOQ CORPORATION
ENGINEERS & PRODUCT DEVELOPMENT
1235 S.W. 87 AVE
MIAMI, FLORIDA 33174
TEL. (305) 264-8100 FAX. (305) 262-6978
STORE\W04-104CTC

PRO-TECH 7SG ALUM CURTAIN WALL SYSTEM (S.M.I.)

CRAWFORD TRACEY CORPORATION
3301 SW 13TH DRIVE
DEERFIELD BEACH, FL. 33442-8101
TEL (954) 698-6888 FAX. (954) 698-6889

revisions:

no	date	by	description
F	11.11.10		GENERAL REVISION
G	03.02.11		REV. PER BCCO COMMENTS
H	05.09.11		REV. PER ENG COMMENTS
I	01.16.12		UPDATED TO 2010 FBC

date: 12-29-04
scale: 3/8" = 1"
dr. by: HAMID
chk. by:

drawing no.
W04-104

ANCHOR LOAD CAPACITY - PSF
EXT.(+) & INT.(-)

NOMINAL DIMS.		ANCHORS TYPE 'A'				ANCHORS TYPE 'B'			
WIDTH (W)	FRAME HEIGHT	A2	A3	A4	A5	B2	B3	B4	B5
36"	120"	84.8	127.2	150.3	160.0	96.0	144.0	160.0	160.0
39"		78.3	117.4	138.7	160.0	88.6	132.9	160.0	160.0
42"		72.7	109.0	128.8	160.0	82.3	123.4	160.0	160.0
45"		67.8	101.8	120.2	160.0	76.8	115.2	153.6	160.0
48"		63.6	95.4	112.7	159.0	72.0	108.0	144.0	160.0
51"		59.9	89.8	106.1	149.6	67.8	101.6	135.5	160.0
54"		56.5	84.8	100.2	141.3	64.0	96.0	128.0	160.0
57"		53.6	80.3	94.9	133.9	60.6	90.9	121.3	151.6
60"		50.9	76.3	90.2	127.2	57.6	86.4	115.2	144.0
63"		48.5	72.7	85.9	120.0	54.9	82.3	109.7	120.0
66"		46.3	69.4	82.0	115.6	52.4	78.5	104.7	120.0
69"		44.2	66.4	78.4	110.6	50.1	75.1	100.2	120.0
72"		42.4	63.6	75.1	106.0	48.0	72.0	96.0	120.0
36"	126"	80.8	120.0	120.0	120.0	91.4	120.0	120.0	120.0
39"		74.5	111.8	120.0	120.0	84.4	120.0	120.0	120.0
42"		69.2	103.8	120.0	120.0	78.4	117.6	120.0	120.0
45"		64.6	96.9	114.5	120.0	73.1	109.7	120.0	120.0
48"		60.6	90.9	107.3	120.0	68.6	102.9	120.0	120.0
51"		57.0	85.5	101.0	120.0	64.5	96.8	120.0	120.0
54"		53.8	80.8	95.4	120.0	61.0	91.4	120.0	120.0
57"		51.0	76.5	90.4	120.0	57.7	86.6	115.5	120.0
60"		48.5	72.7	85.9	120.0	54.9	82.3	109.7	120.0
63"		46.1	69.2	81.8	115.4	52.2	78.4	104.5	120.0
66"		44.1	66.1	78.1	110.1	49.9	74.8	99.7	120.0
69"		42.1	63.2	74.7	105.3	47.7	71.6	95.4	119.3
72"		40.4	60.6	71.6	101.0	45.7	68.6	91.4	114.3
36"	132"	77.1	115.6	120.0	120.0	87.3	120.0	120.0	120.0
39"		71.2	106.7	120.0	120.0	80.6	120.0	120.0	120.0
42"		66.1	99.1	117.1	120.0	74.8	112.2	120.0	120.0
45"		61.7	92.5	109.3	120.0	69.8	104.7	120.0	120.0
48"		57.8	86.7	102.5	120.0	65.5	98.2	120.0	120.0
51"		54.4	81.6	96.4	120.0	61.6	92.4	120.0	120.0
54"		51.4	77.1	91.1	120.0	58.2	87.3	116.4	120.0
57"		48.7	73.0	86.3	120.0	55.1	82.7	110.2	120.0
60"		46.3	69.4	82.0	115.6	52.4	78.5	104.7	120.0
63"		44.1	66.1	78.1	110.1	49.9	74.8	99.7	120.0
66"		42.0	63.1	74.5	105.1	47.6	71.4	95.2	119.0
69"		40.2	60.3	71.3	100.6	45.5	68.3	91.1	113.8
72"		38.5	57.8	68.3	96.4	43.6	65.5	87.3	109.1
36"	138"	73.7	110.6	120.0	120.0	83.5	120.0	120.0	120.0
39"		68.1	102.1	120.0	120.0	77.1	115.6	120.0	120.0
42"		63.2	94.8	112.0	120.0	71.6	107.3	120.0	120.0
45"		59.0	88.5	104.5	120.0	66.8	100.2	120.0	120.0
48"		55.3	83.0	98.0	120.0	62.6	93.9	120.0	120.0
51"		52.1	78.1	92.2	120.0	58.9	88.4	117.9	120.0
54"		49.2	73.7	87.1	120.0	55.7	83.5	111.3	120.0
57"		46.6	69.9	82.5	116.4	52.7	79.1	105.4	120.0
60"		44.2	66.4	78.4	110.6	50.1	75.1	100.2	120.0
63"		42.1	63.2	74.7	105.3	47.7	71.6	95.4	119.3
66"		40.2	60.3	71.3	100.6	45.5	68.3	91.1	113.8
69"		38.5	57.7	68.2	96.2	43.6	65.3	87.1	108.9
72"		36.9	55.3	65.3	92.2	41.7	62.6	83.5	104.3

ANCHOR LOAD CAPACITY - PSF
EXT.(+) & INT.(-)

NOMINAL DIMS.		ANCHORS TYPE 'A'				ANCHORS TYPE 'B'			
WIDTH (W)	FRAME HEIGHT	A2	A3	A4	A5	B2	B3	B4	B5
36"	144"	70.7	106.0	120.0	120.0	80.0	120.0	120.0	120.0
39"		65.2	97.8	115.6	120.0	73.8	110.8	120.0	120.0
42"		60.6	90.9	107.3	120.0	68.6	102.9	120.0	120.0
45"		56.5	84.8	100.2	120.0	64.0	96.0	120.0	120.0
48"		53.0	79.5	93.9	120.0	60.0	90.0	120.0	120.0
51"		49.9	74.8	88.4	120.0	56.5	84.7	112.9	120.0
54"		47.1	70.7	83.5	117.8	53.3	80.0	106.7	120.0
57"		44.6	66.9	79.1	111.6	50.5	75.8	101.1	120.0
60"		42.4	63.6	75.1	106.0	48.0	72.0	96.0	120.0
63"		40.4	60.6	71.6	101.0	45.7	68.6	91.4	114.3
66"		38.5	57.8	68.3	96.4	43.6	65.5	87.3	109.1
69"		36.9	55.3	65.3	92.2	41.7	62.6	83.5	104.3
36"	150"	67.8	101.8	120.0	120.0	76.8	115.2	120.0	120.0
39"		62.6	93.9	111.0	120.0	70.9	106.3	120.0	120.0
42"		58.1	87.2	103.0	120.0	65.8	98.7	120.0	120.0
45"		54.3	81.4	96.2	120.0	61.4	92.2	120.0	120.0
48"		50.9	76.3	90.2	120.0	57.6	86.4	115.2	120.0
51"		47.9	71.8	84.9	119.7	54.2	81.3	108.4	120.0
54"		45.2	67.8	80.1	113.1	51.2	76.8	102.4	120.0
57"		42.8	64.3	75.9	107.1	48.5	72.8	97.0	120.0
60"		40.7	61.1	72.1	101.8	46.1	69.1	92.2	115.2
63"		38.8	58.1	68.7	96.9	43.9	65.8	87.8	109.7
66"		37.0	55.5	65.6	92.5	41.9	62.8	83.8	104.7
36"	156"	65.2	97.8	115.6	120.0	73.8	110.8	120.0	120.0
39"		60.2	90.3	106.7	120.0	68.2	102.2	120.0	120.0
42"		55.9	83.9	99.1	120.0	63.3	94.9	120.0	120.0
45"		52.2	78.3	92.5	120.0	59.1	88.6	118.2	120.0
48"		48.9	73.4	86.7	120.0	55.4	83.1	110.8	120.0
51"		46.0	69.1	81.6	115.1	52.1	78.2	104.3	120.0
54"		43.5	65.2	77.1	108.7	49.2	73.8	98.5	120.0
57"		41.2	61.8	73.0	103.0	46.6	70.0	93.3	116.6
60"		39.1	58.7	69.4	97.8	44.3	66.5	88.6	110.8
63"		37.3	55.9	66.1	93.2	42.2	63.3	84.4	105.5
36"	162"	62.8	94.2	111.3	120.0	71.1	106.7	120.0	120.0
39"		58.0	87.0	102.7	120.0	65.6	98.5	120.0	120.0
42"		53.8	80.8	95.4	120.0	61.0	91.4	120.0	120.0
45"		50.3	75.4	89.0	120.0	56.9	85.3	113.8	120.0
48"		47.1	70.7	83.5	117.8	53.3	80.0	106.7	120.0
51"		44.3	66.5	78.6	110.8	50.2	75.3	100.4	120.0
54"		41.9	62.8	74.2	104.7	47.4	71.1	94.8	118.5
57"		39.7	59.5	70.3	99.2	44.9	67.4	89.8	112.3
60"		37.7	56.5	66.8	94.2	42.7	64.0	85.3	106.7
36"	168"	60.6	90.9	107.3	120.0	68.6	102.9	120.0	120.0
39"		55.9	83.9	99.1	120.0	63.3	94.9	120.0	120.0
42"		51.9	77.9	92.0	120.0	58.8	88.2	117.6	120.0
45"		48.5	72.7	85.9	120.0	54.9	82.3	109.7	120.0
48"		45.4	68.1	80.5	113.6	51.4	77.1	102.9	120.0
51"		42.8	64.1	75.8	106.9	48.4	72.6	96.8	120.0
54"		40.4	60.6	71.6	101.0	45.7	68.6	91.4	114.3
57"		38.3	57.4	67.8	95.6	43.3	65.0	86.6	108.3
60"		36.3	54.5	64.4	90.9	41.1	61.7	82.3	102.9

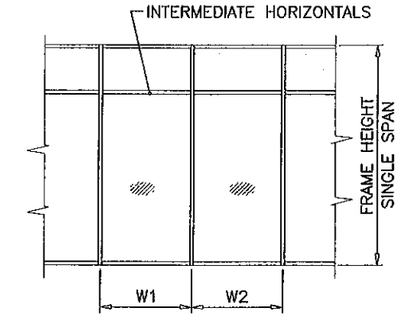

$$\text{WIDTH (W)} = \frac{W1 + W2}{2}$$

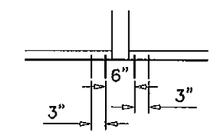

A2, B2,

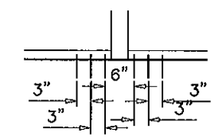

A3, B3,

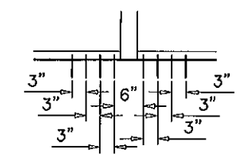

A4, B4,

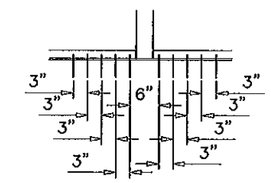

A5, B5,

ANCHORS TYPES A&B: SEE SHEET 9 FOR DESCRIPTION

A2 = (2) ANCHORS TYPE 'A' AT EACH SIDE OF MULLION
A3 = (3) ANCHORS TYPE 'A' AT EACH SIDE OF MULLION
A4 = (4) ANCHORS TYPE 'A' AT EACH SIDE OF MULLION
A5 = (5) ANCHORS TYPE 'A' AT EACH SIDE OF MULLION

B2 = (2) ANCHORS TYPE 'B' AT EACH SIDE OF MULLION
B3 = (3) ANCHORS TYPE 'B' AT EACH SIDE OF MULLION
B4 = (4) ANCHORS TYPE 'B' AT EACH SIDE OF MULLION
B5 = (5) ANCHORS TYPE 'B' AT EACH SIDE OF MULLION

ALL OTHER ANCHORS TO BE SPACED AS PER ELEVATION.

Engr: JAVAD AHMAD
CIVIL
FLA. PE # 70592
C.A.N. 3538

FEB 15 2012

PRODUCT REVISED
In complying with the Florida Building Code
Acceptance No 12-0223.37
Expiration Date 3/12/16
By Ishwar T. Chand
Miami Dade Product Control

AL-FAROOQ CORPORATION
ENGINEERS & PRODUCT DEVELOPMENT
1235 S.W. 87 AVE
MIAMI, FLORIDA 33174
TEL. (305) 264-8100 FAX. (305) 262-6978
STORE\W04-104CTC

PRO-TECH 7SG ALUM CURTAIN WALL SYSTEM (S.M.I.)

CRAWFORD TRACEY CORPORATION
3301 SW 13TH DRIVE
DEERFIELD BEACH, FL. 33442-8101
TEL. (954) 698-6888 FAX. (954) 698-6889

revisions:

no	date	by	description
E	08.19.08		NO CHANGE THIS SHEET
F	11.11.10		GENERAL REVISION
G	03.02.11		REV. PER BCCO COMMENTS
H	05.09.11		NO CHANGE THIS SHEET
I	01.16.12		NO CHANGE THIS SHEET

date: 12-29-04
scale: 3/8"=1'-0"
dr. by: HAMID
chk. by:

drawing no.
W04-104

ANCHOR LOAD CAPACITY - PSF EXT.(+) & INT.(-)					
NOMINAL DIMS.		ANCHORS TYPE 'AA'			
WIDTH (W)	FRAME HEIGHT	AA33	AA45	AA66	AA76
36"	120"	84.8	127.2	150.3	160.0
39"		78.3	117.4	138.7	160.0
42"		72.7	109.0	128.8	160.0
45"		67.8	101.8	120.2	160.0
48"		63.6	95.4	112.7	159.0
51"		59.9	89.8	106.1	149.6
54"		56.5	84.8	100.2	141.3
57"		53.6	80.3	94.9	133.9
60"		50.9	76.3	90.2	127.2
63"		48.5	72.7	85.9	120.0
66"		46.3	69.4	82.0	115.6
69"		44.2	66.4	78.4	110.6
72"		42.4	63.6	75.1	106.0
36"	126"	80.8	120.0	120.0	120.0
39"		74.5	111.8	120.0	120.0
42"		69.2	103.8	120.0	120.0
45"		64.6	96.9	114.5	120.0
48"		60.6	90.9	107.3	120.0
51"		57.0	85.5	101.0	120.0
54"		53.8	80.8	95.4	120.0
57"		51.0	76.5	90.4	120.0
60"		48.5	72.7	85.9	120.0
63"		46.1	69.2	81.8	115.4
66"		44.1	66.1	78.1	110.1
69"		42.1	63.2	74.7	105.3
72"		40.4	60.6	71.6	101.0
36"	132"	77.1	115.6	120.0	120.0
39"		71.2	106.7	120.0	120.0
42"		66.1	99.1	117.1	120.0
45"		61.7	92.5	109.3	120.0
48"		57.8	86.7	102.5	120.0
51"		54.4	81.6	96.4	120.0
54"		51.4	77.1	91.1	120.0
57"		48.7	73.0	86.3	120.0
60"		46.3	69.4	82.0	115.6
63"		44.1	66.1	78.1	110.1
66"		42.0	63.1	74.5	105.1
69"		40.2	60.3	71.3	100.6
72"		38.5	57.8	68.3	96.4
36"	138"	73.7	110.6	120.0	120.0
39"		68.1	102.1	120.0	120.0
42"		63.2	94.8	112.0	120.0
45"		59.0	88.5	104.5	120.0
48"		55.3	83.0	98.0	120.0
51"		52.1	78.1	92.2	120.0
54"		49.2	73.7	87.1	120.0
57"		46.6	69.9	82.5	116.4
60"		44.2	66.4	78.4	110.6
63"		42.1	63.2	74.7	105.3
66"		40.2	60.3	71.3	100.6
69"		38.5	57.7	68.2	96.2
72"		36.9	55.3	65.3	92.2

ANCHOR LOAD CAPACITY - PSF EXT.(+) & INT.(-)					
NOMINAL DIMS.		ANCHORS TYPE 'AA'			
WIDTH (W)	FRAME HEIGHT	AA33	AA45	AA66	AA76
36"	144"	70.7	106.0	120.0	120.0
39"		65.2	97.8	115.6	120.0
42"		60.6	90.9	107.3	120.0
45"		56.5	84.8	100.2	120.0
48"		53.0	79.5	93.9	120.0
51"		49.9	74.8	88.4	120.0
54"		47.1	70.7	83.5	117.8
57"		44.6	66.9	79.1	111.6
60"		42.4	63.6	75.1	106.0
63"		40.4	60.6	71.6	101.0
66"		38.5	57.8	68.3	96.4
69"		36.9	55.3	65.3	92.2
36"	150"	67.8	101.8	120.0	120.0
39"		62.6	93.9	111.0	120.0
42"		58.1	87.2	103.0	120.0
45"		54.3	81.4	96.2	120.0
48"		50.9	76.3	90.2	120.0
51"		47.9	71.8	84.9	119.7
54"		45.2	67.8	80.1	113.1
57"		42.8	64.3	75.9	107.1
60"		40.7	61.1	72.1	101.8
63"		38.8	58.1	68.7	96.9
66"		37.0	55.5	65.6	92.5
36"	156"	65.2	97.8	115.6	120.0
39"		60.2	90.3	106.7	120.0
42"		55.9	83.9	99.1	120.0
45"		52.2	78.3	92.5	120.0
48"		48.9	73.4	86.7	120.0
51"		46.0	69.1	81.6	115.1
54"		43.5	65.2	77.1	108.7
57"		41.2	61.8	73.0	103.0
60"		39.1	58.7	69.4	97.8
63"		37.3	55.9	66.1	93.2
36"	162"	62.8	94.2	111.3	120.0
39"		58.0	87.0	102.7	120.0
42"		53.8	80.8	95.4	120.0
45"		50.3	75.4	89.0	120.0
48"		47.1	70.7	83.5	117.8
51"		44.3	66.5	78.6	110.8
54"		41.9	62.8	74.2	104.7
57"		39.7	59.5	70.3	99.2
60"		37.7	56.5	66.8	94.2
36"	168"	60.6	90.9	107.3	120.0
39"		55.9	83.9	99.1	120.0
42"		51.9	77.9	92.0	120.0
45"		48.5	72.7	85.9	120.0
48"		45.4	68.1	80.5	113.6
51"		42.8	64.1	75.8	106.9
54"		40.4	60.6	71.6	101.0
57"		38.3	57.4	67.8	95.6
60"		36.3	54.5	64.4	90.9

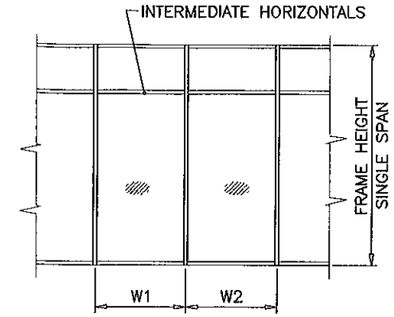

$$\text{WIDTH (W)} = \frac{W1 + W2}{2}$$

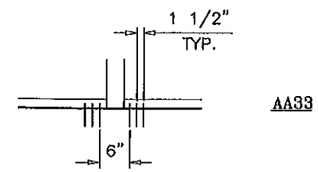

AA33

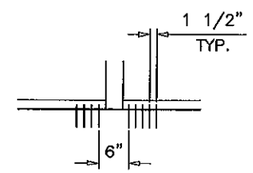

A45

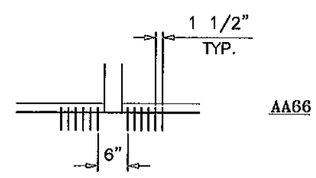

AA66

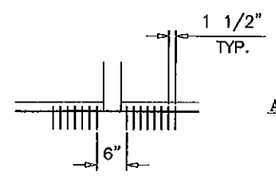

AA78

PRODUCT REVISED
as complying with the Florida
Building Code
Acceptance No. 12-0223.37
Expiration Date 3/2/17
By
Miami Dade Product Control

ANCHORS TYPES AA (INTO 2BY BUCKS): SEE SHEET 9 FOR DESCRIPTION

AA33= (6) ANCHORS TYPE 'AA' AT MULLION ENDS
AA45= (9) ANCHORS TYPE 'AA' AT MULLION ENDS
AA66= (12) ANCHORS TYPE 'AA' AT MULLION ENDS
AA78= (15) ANCHORS TYPE 'AA' AT MULLION ENDS

ALL OTHER ANCHORS TO BE SPACED AS PER ELEVATION.

Engr: JAVAD AHMAD
CIVIL
FLA. PE # 70592
C.A.N. 3538
FEB 15 2012

AL-FAROOQ CORPORATION
ENGINEERS & PRODUCT DEVELOPMENT
1235 S.W. 87 AVE
MIAMI, FLORIDA 33174
TEL (305) 264-8100 FAX. (305) 262-6978

STORE\W04-104CTC

PRO-TECH 7SG ALUM CURTAIN WALL SYSTEM (S.M.I.)

CRAWFORD TRACEY CORPORATION
3301 SW 13TH DRIVE
DEERFIELD BEACH, FL 33442-8101
TEL. (954) 698-6888 FAX. (954) 698-6889

revisions:

no	date	by	description
E	08.19.08		REV. PER BCCO COMMENTS
F	11.11.10		GENERAL REVISION
G	03.02.11		REV. PER BCCO COMMENTS
H	05.09.11		NO CHANGE THIS SHEET
I	01.16.12		NO CHANGE THIS SHEET

date: 12-29-04
scale: 3/8"=1'-0"
dr. by: HAMID
chk. by:

drawing no.
W04-104

ANCHOR LOAD CAPACITY - PSF EXT.(+) & INT.(-)					
NOMINAL DIMS.		ANCHORS TYPE 'C'			
WIDTH (W)	FRAME HEIGHT	C2	C3	C4	C5
36"	120"	133.3	160.0	160.0	160.0
39"		123.1	160.0	160.0	160.0
42"		114.3	160.0	160.0	160.0
45"		106.7	160.0	160.0	160.0
48"		100.0	150.0	160.0	160.0
51"		94.1	141.2	160.0	160.0
54"		88.9	133.3	160.0	160.0
57"		84.2	126.3	160.0	160.0
60"		80.0	120.0	160.0	160.0
63"		76.2	114.3	120.0	120.0
66"		72.7	109.1	120.0	120.0
69"		69.6	104.3	120.0	120.0
72"		66.7	100.0	120.0	120.0
36"	126"	120.0	120.0	120.0	120.0
39"		117.2	120.0	120.0	120.0
42"		108.8	120.0	120.0	120.0
45"		101.6	120.0	120.0	120.0
48"		95.2	120.0	120.0	120.0
51"		89.6	120.0	120.0	120.0
54"		84.7	120.0	120.0	120.0
57"		80.2	120.0	120.0	120.0
60"		76.2	114.3	120.0	120.0
63"		72.6	108.8	120.0	120.0
66"		69.3	103.9	120.0	120.0
69"		66.3	99.4	120.0	120.0
72"		63.5	95.2	120.0	120.0
36"	132"	120.0	120.0	120.0	120.0
39"		111.9	120.0	120.0	120.0
42"		103.9	120.0	120.0	120.0
45"		97.0	120.0	120.0	120.0
48"		90.9	120.0	120.0	120.0
51"		85.6	120.0	120.0	120.0
54"		80.8	120.0	120.0	120.0
57"		76.6	114.8	120.0	120.0
60"		72.7	109.1	120.0	120.0
63"		69.3	103.9	120.0	120.0
66"		66.1	99.2	120.0	120.0
69"		63.2	94.9	120.0	120.0
72"		60.6	90.9	120.0	120.0
36"	138"	115.9	120.0	120.0	120.0
39"		107.0	120.0	120.0	120.0
42"		99.4	120.0	120.0	120.0
45"		92.8	120.0	120.0	120.0
48"		87.0	120.0	120.0	120.0
51"		81.8	120.0	120.0	120.0
54"		77.3	115.9	120.0	120.0
57"		73.2	109.8	120.0	120.0
60"		69.6	104.3	120.0	120.0
63"		66.3	99.4	120.0	120.0
66"		63.2	94.9	120.0	120.0
69"		60.5	90.7	120.0	120.0
72"		58.0	87.0	115.9	120.0

ANCHOR LOAD CAPACITY - PSF EXT.(+) & INT.(-)					
NOMINAL DIMS.		ANCHORS TYPE 'C'			
WIDTH (W)	FRAME HEIGHT	C2	C3	C4	C5
36"	144"	111.1	120.0	120.0	120.0
39"		102.6	120.0	120.0	120.0
42"		95.2	120.0	120.0	120.0
45"		88.9	120.0	120.0	120.0
48"		83.3	120.0	120.0	120.0
51"		78.4	117.6	120.0	120.0
54"		74.1	111.1	120.0	120.0
57"		70.2	105.3	120.0	120.0
60"		66.7	100.0	120.0	120.0
63"		63.5	95.2	120.0	120.0
66"		60.6	90.9	120.0	120.0
69"		58.0	87.0	115.9	120.0
36"	150"	106.7	120.0	120.0	120.0
39"		98.5	120.0	120.0	120.0
42"		91.4	120.0	120.0	120.0
45"		85.3	120.0	120.0	120.0
48"		80.0	120.0	120.0	120.0
51"		75.3	112.9	120.0	120.0
54"		71.1	106.7	120.0	120.0
57"		67.4	101.1	120.0	120.0
60"		64.0	96.0	120.0	120.0
63"		61.0	91.4	120.0	120.0
66"		58.2	87.3	116.4	120.0
36"	156"	102.6	120.0	120.0	120.0
39"		94.7	120.0	120.0	120.0
42"		87.9	120.0	120.0	120.0
45"		82.1	120.0	120.0	120.0
48"		76.9	115.4	120.0	120.0
51"		72.4	108.6	120.0	120.0
54"		68.4	102.6	120.0	120.0
57"		64.8	97.2	120.0	120.0
60"		61.5	92.3	120.0	120.0
63"		58.6	87.9	117.2	120.0
36"	162"	98.8	120.0	120.0	120.0
39"		91.2	120.0	120.0	120.0
42"		84.7	120.0	120.0	120.0
45"		79.0	118.5	120.0	120.0
48"		74.1	111.1	120.0	120.0
51"		69.7	104.6	120.0	120.0
54"		65.8	98.8	120.0	120.0
57"		62.4	93.6	120.0	120.0
60"		59.3	88.9	118.5	120.0
36"	168"	95.2	120.0	120.0	120.0
39"		87.9	120.0	120.0	120.0
42"		81.6	120.0	120.0	120.0
45"		76.2	114.3	120.0	120.0
48"		71.4	107.1	120.0	120.0
51"		67.2	100.8	120.0	120.0
54"		63.5	95.2	120.0	120.0
57"		60.2	90.2	120.0	120.0
60"		57.1	85.7	114.3	120.0

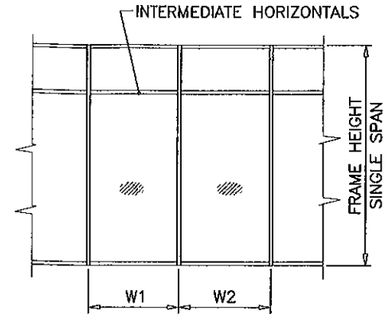

$$\text{WIDTH (W)} = \frac{W1 + W2}{2}$$

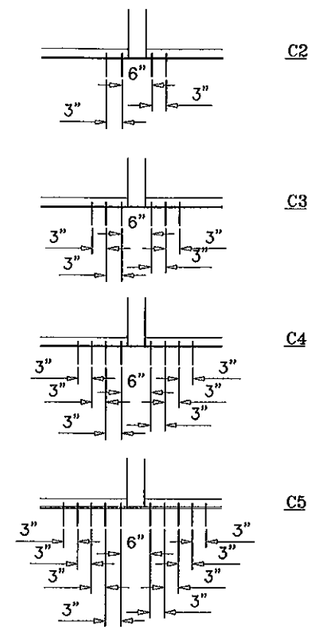

ANCHORS TYPES C (INTO METAL STRUCTURES): SEE SHEET 9 FOR DESCRIPTION

C2 = (2) ANCHORS TYPE 'C' AT EACH SIDE OF MULLION
C3 = (3) ANCHORS TYPE 'C' AT EACH SIDE OF MULLION
C4 = (4) ANCHORS TYPE 'C' AT EACH SIDE OF MULLION
C5 = (5) ANCHORS TYPE 'C' AT EACH SIDE OF MULLION

ALL OTHER ANCHORS TO BE SPACED AS PER ELEVATION.

PRODUCT REVISED
as complying with the Florida
Building Code
Acceptance No. 12-0223.37
Expiration Date 3/2/16
By
Miami Dade Product Control

Engr: JAVAD AHMAD
CIVIL
FLA. PE # 70592
C.A.N. 7538
FEB 15 2012

AL-FAROOQ CORPORATION
ENGINEERS & PRODUCT DEVELOPMENT
1235 S.W. 87 AVE
MIAMI, FLORIDA 33174
TEL. (305) 264-8100 FAX. (305) 262-6978

STORE\W04-104CTC

PRO-TECH 7SG ALUM CURTAIN WALL SYSTEM (S.M.I.)

CRAWFORD TRACEY CORPORATION
3301 SW 13TH DRIVE
DEERFIELD BEACH, FL. 33442-8101
TEL. (954) 698-6888 FAX. (954) 698-6889

revisions:

no	date	by	description
E	08.19.08		NO CHANGE THIS SHEET
F	11.11.10		GENERAL REVISION
G	03.02.11		REV. PER BCCO COMMENTS
H	05.09.11		NO CHANGE THIS SHEET
I	01.16.12		NO CHANGE THIS SHEET

date: 12-29-04
scale: 3/8"=1'-0"
dr. by: HAMID
chk. by:

drawing no.
W04-104

ANCHOR LOAD CAPACITY – PSF EXT.(+) & INT.(–)					
NOMINAL DIMS.		4 ANCHORS PER PLATE TYPE 'D'		6 ANCHORS PER PLATE TYPE 'D'	
WIDTH (W)	FRAME HEIGHT	2–1/4" EDGE DIST.	3–1/4" EDGE DIST.	2–1/4" EDGE DIST.	3–1/4" EDGE DIST.
36"	120"	108.7	160.0	160.0	160.0
39"		100.3	158.6	150.5	160.0
42"		93.1	147.3	139.7	160.0
45"		86.9	137.4	130.4	160.0
48"		81.5	128.9	122.3	160.0
51"		76.7	121.3	115.1	160.0
54"		72.4	114.5	108.7	160.0
57"		68.6	108.5	102.9	160.0
60"		65.2	103.1	97.8	154.6
63"		62.1	98.2	93.1	120.0
66"		59.3	93.7	88.9	120.0
69"		56.7	89.6	85.0	120.0
72"		54.3	85.9	81.5	120.0
36"	126"	103.5	120.0	120.0	120.0
39"		95.5	120.0	120.0	120.0
42"		88.7	120.0	120.0	120.0
45"		82.8	120.0	120.0	120.0
48"		77.6	120.0	116.4	120.0
51"		73.1	115.5	109.6	120.0
54"		69.0	109.1	103.5	120.0
57"		65.4	103.3	98.0	120.0
60"		62.1	98.2	93.1	120.0
63"		59.1	93.5	88.7	120.0
66"		56.5	89.2	84.7	120.0
69"		54.0	85.4	81.0	120.0
72"		51.7	81.8	77.6	120.0
36"	132"	98.8	120.0	120.0	120.0
39"		91.2	120.0	120.0	120.0
42"		84.7	120.0	120.0	120.0
45"		79.0	120.0	118.5	120.0
48"		74.1	117.1	111.1	120.0
51"		69.7	110.2	104.6	120.0
54"		65.9	104.1	98.8	120.0
57"		62.4	98.6	93.6	120.0
60"		59.3	93.7	88.9	120.0
63"		56.5	89.2	84.7	120.0
66"		53.9	85.2	80.8	120.0
69"		51.5	81.5	77.3	120.0
72"		49.4	78.1	74.1	117.2
36"	138"	94.5	120.0	120.0	120.0
39"		87.2	120.0	120.0	120.0
42"		81.0	120.0	120.0	120.0
45"		75.6	119.5	113.4	120.0
48"		70.9	112.0	106.3	120.0
51"		66.7	105.5	100.1	120.0
54"		63.0	99.6	94.5	120.0
57"		59.7	94.4	89.5	120.0
60"		56.7	89.6	85.0	120.0
63"		54.0	85.4	81.0	120.0
66"		51.5	81.5	77.3	120.0
69"		49.3	77.9	74.0	116.9
72"		47.2	74.7	70.9	112.1

ANCHOR LOAD CAPACITY – PSF EXT.(+) & INT.(–)					
NOMINAL DIMS.		4 ANCHORS PER PLATE TYPE 'D'		6 ANCHORS PER PLATE TYPE 'D'	
WIDTH (W)	FRAME HEIGHT	2–1/4" EDGE DIST.	3–1/4" EDGE DIST.	2–1/4" EDGE DIST.	3–1/4" EDGE DIST.
36"	144"	90.6	120.0	120.0	120.0
39"		83.6	120.0	120.0	120.0
42"		77.6	120.0	116.4	120.0
45"		72.4	114.5	108.7	120.0
48"		67.9	107.4	101.9	120.0
51"		63.9	101.1	95.9	120.0
54"		60.4	95.4	90.6	120.0
57"		57.2	90.4	85.8	120.0
60"		54.3	85.9	81.5	120.0
63"		51.7	81.8	77.6	120.0
66"		49.4	78.1	74.1	117.2
69"		47.2	74.7	70.9	112.1
36"	150"	86.9	120.0	120.0	120.0
39"		80.2	120.0	120.0	120.0
42"		74.5	117.8	111.8	120.0
45"		69.5	110.0	104.3	120.0
48"		65.2	103.1	97.8	120.0
51"		61.4	97.0	92.0	120.0
54"		58.0	91.6	86.9	120.0
57"		54.9	86.8	82.4	120.0
60"		52.2	82.5	78.2	120.0
63"		49.7	78.5	74.5	117.8
66"		47.4	75.0	71.1	112.5
36"	156"	83.6	120.0	120.0	120.0
39"		77.2	120.0	115.7	120.0
42"		71.6	113.3	107.5	120.0
45"		66.9	105.7	100.3	120.0
48"		62.7	99.1	94.0	120.0
51"		59.0	93.3	88.5	120.0
54"		55.7	88.1	83.6	120.0
57"		52.8	83.5	79.2	120.0
60"		50.2	79.3	75.2	119.0
63"		47.8	75.5	71.6	113.3
36"	162"	80.5	120.0	120.0	120.0
39"		74.3	117.5	111.5	120.0
42"		69.0	109.1	103.5	120.0
45"		64.4	101.8	96.6	120.0
48"		60.4	95.4	90.6	120.0
51"		56.8	89.8	85.2	120.0
54"		53.7	84.8	80.5	120.0
57"		50.8	80.4	76.3	120.0
60"		48.3	76.4	72.4	114.5
36"	168"	77.6	120.0	116.4	120.0
39"		71.6	113.3	107.5	120.0
42"		66.5	105.2	99.8	120.0
45"		62.1	98.2	93.1	120.0
48"		58.2	92.0	87.3	120.0
51"		54.8	86.6	82.2	120.0
54"		51.7	81.8	77.6	120.0
57"		49.0	77.5	73.5	116.3
60"		46.6	73.6	69.9	110.5

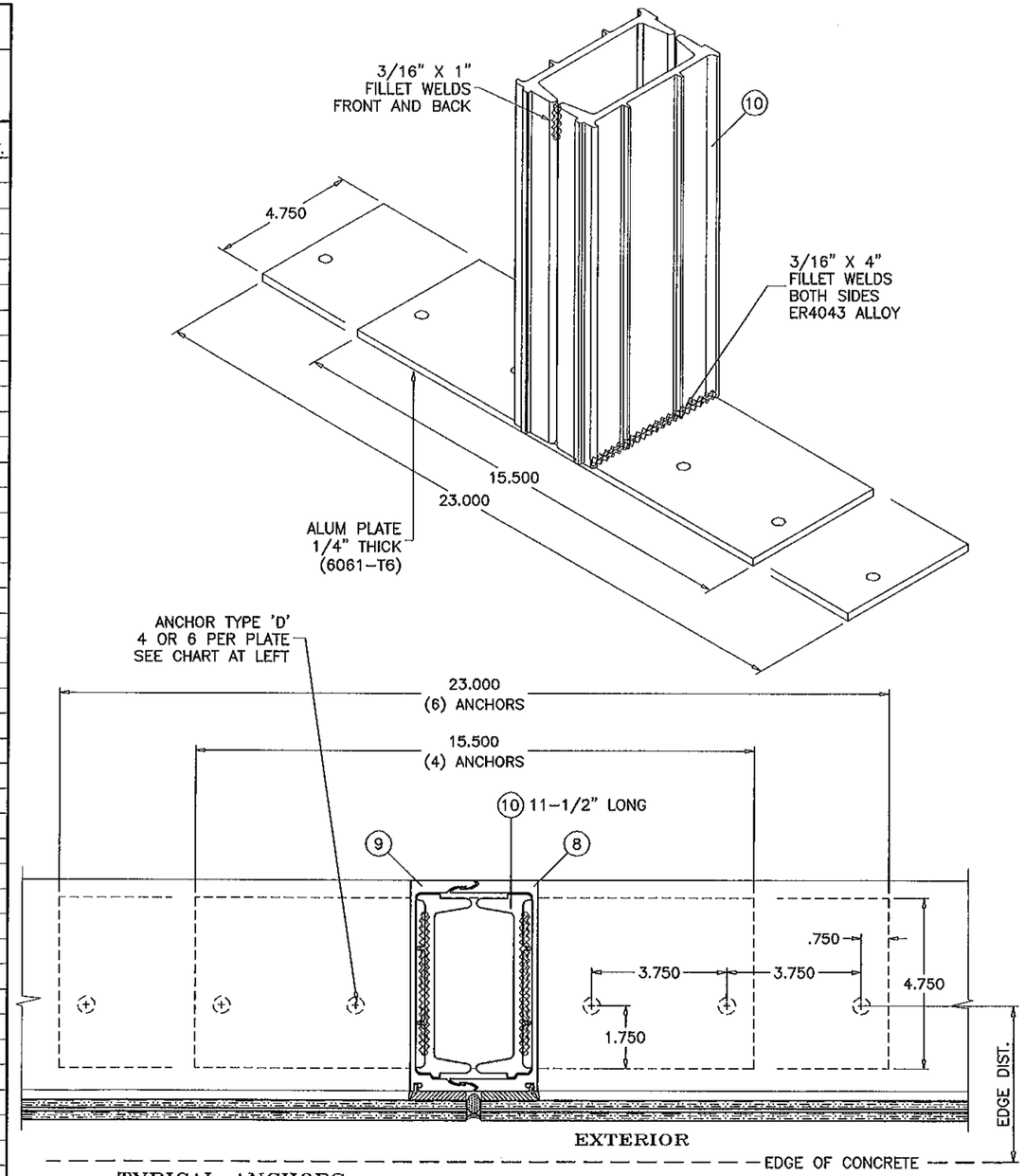

TYPICAL ANCHORS:

TYPE 'D'– 3/8" DIA. WEDGE–BOLT ANCHOR BY 'POWER FASTENERS'
DIRECTLY INTO CONCRETE
1–1/2" MIN. EMBED INTO CONC. (3000 PSI MIN.)
EDGE DIST. (SEE CHARTS ABOVE)

Engr: JAVAD AHMAD
CIVIL
FLA. P.E. # 70592
C.A.N. 3538

FEB 15 2012

PRODUCT REVIEWED
as complying with the Florida
Building Code
Acceptance No. 12-0223.37
Expiration Date 3/2/16
By [illegible]
Submittal Date Product Control

AL-FAROOQ CORPORATION
ENGINEERS & PRODUCT DEVELOPMENT
1235 S.W. 87 AVE
MIAMI, FLORIDA 33174
TEL. (305) 264-8100 FAX. (305) 262-6978

STORE\W04-104CTC

PRO-TECH 7SG ALUM CURTAIN WALL SYSTEM (S.M.I.)

CRAWFORD TRACEY CORPORATION
3301 SW 13TH DRIVE
DEERFIELD BEACH, FL. 33442-8101
TEL. (954) 698-6888 FAX. (954) 698-6889

revisions:			
no	date	by	description
E	08.19.08		NO CHANGE THIS SHEET
F	11.11.10		GENERAL REVISION
G	03.02.11		REV. PER BCCO COMMENTS
H	05.09.11		NO CHANGE THIS SHEET
I	01.16.12		NO CHANGE THIS SHEET

date: 12-29-04
scale: 1/4" = 1"
dr. by: HAMID
chk. by:

drawing no.
W04-104

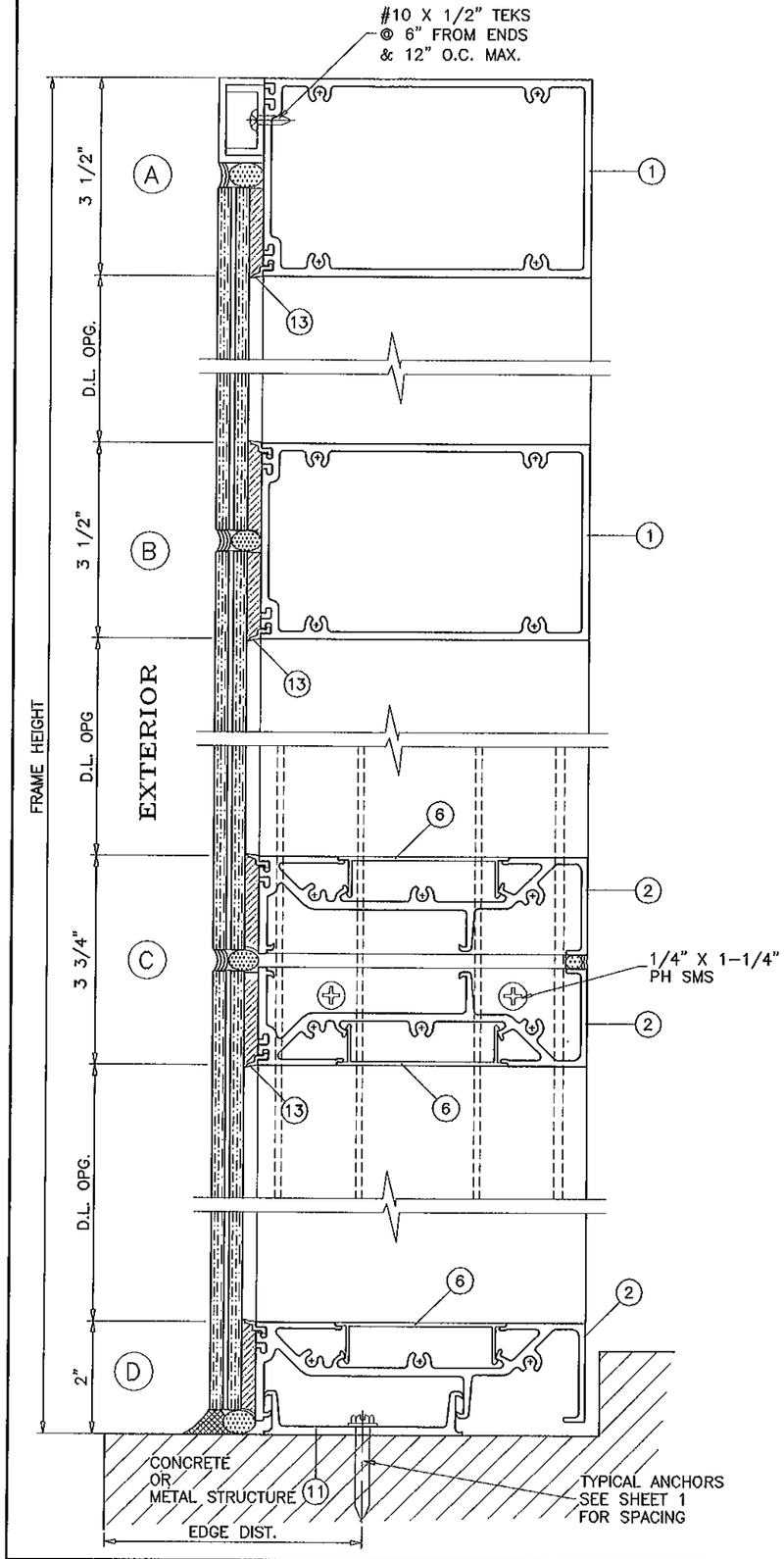

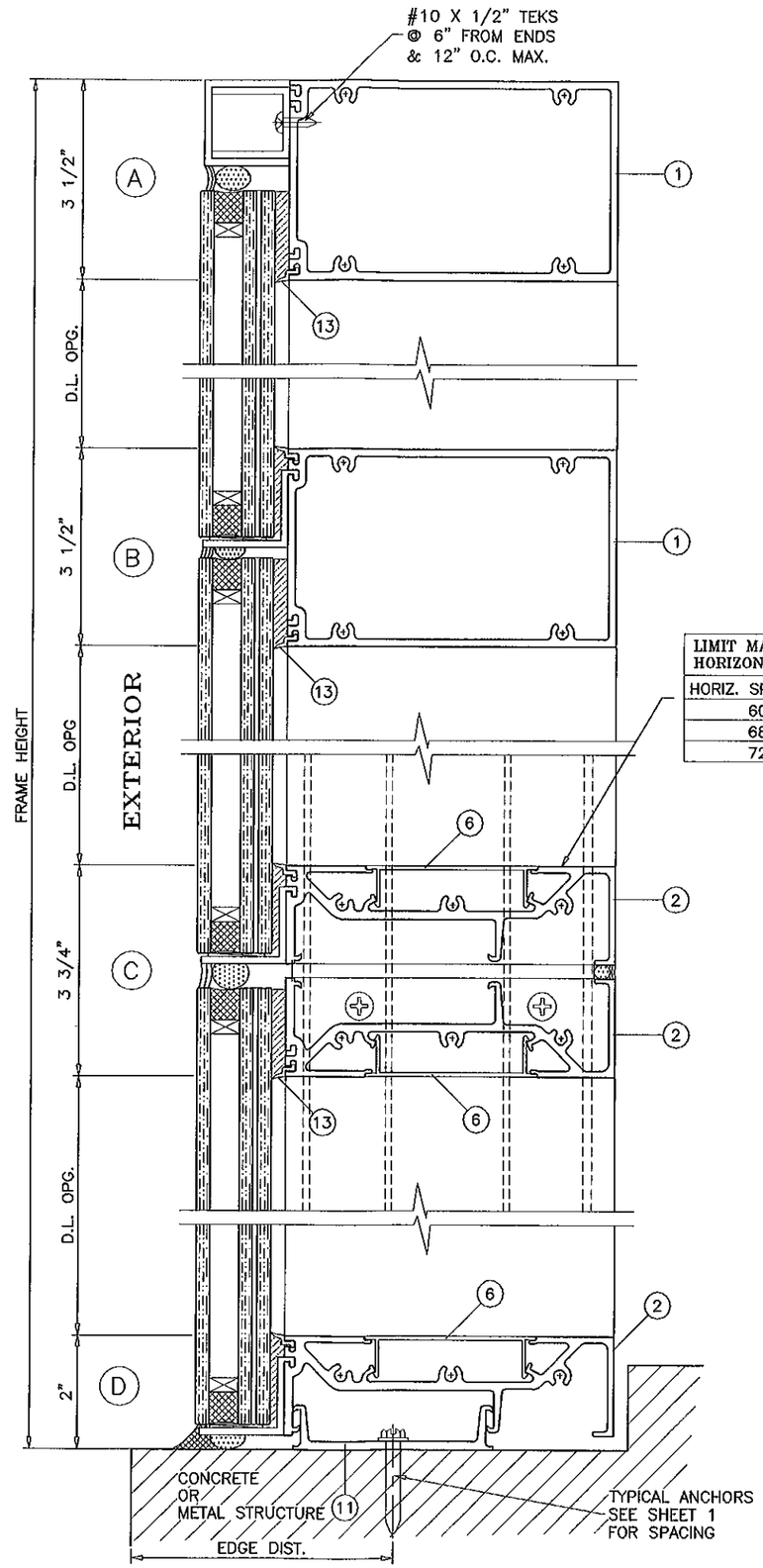

LIMIT MAX. DESIGN LOADS FOR THIS HORIZONTAL AS FOLLOWS

HORIZ. SPAN MAX.	DESIGN LOADS
60"	120 PSF
68"	80 PSF
72"	65 PSF

PRODUCT REVIEWED
in complying with the Florida
Building Code
Acceptance No. 12-0223.37
Expiration Date 3/12/16
By
Miami Dade Product Control

Engr: JAVAD AHMAD
CIVIL
FLA. PE # 70592
C.A.N. 3538
FEB 15 2012

AL-FAROOQ CORPORATION
ENGINEERS & PRODUCT DEVELOPMENT
1235 S.W. 87 AVE
MIAMI, FLORIDA 33174
TEL. (305) 264-8100 FAX. (305) 262-6978
STORE\W04-104CTC

PRO-TECH 7SG ALUM CURTAIN WALL SYSTEM (S.M.I.)

CRAWFORD TRACEY CORPORATION
3301 SW 13TH DRIVE
DEERFIELD BEACH, FL. 33442-8101
TEL. (954) 698-6888 FAX. (954) 698-6889

revisions:

no	date	by	description
E	08.19.08		REV. PER BCCO COMMENTS
F	11.11.10		GENERAL REVISION
G	03.02.11		REV. PER BCCO COMMENTS
H	05.09.11		REV. PER BNC COMMENTS
I	01.16.12		NO CHANGE THIS SHEET

date: 12-29-04
scale: 3/8" = 1"
dr. by: HAMID
chk. by:

drawing no.
W04-104

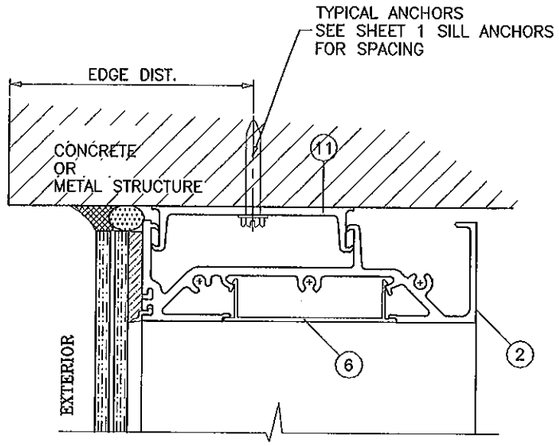

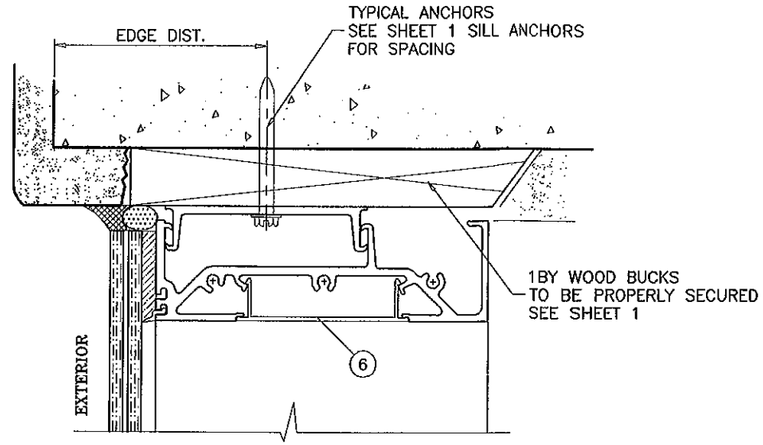

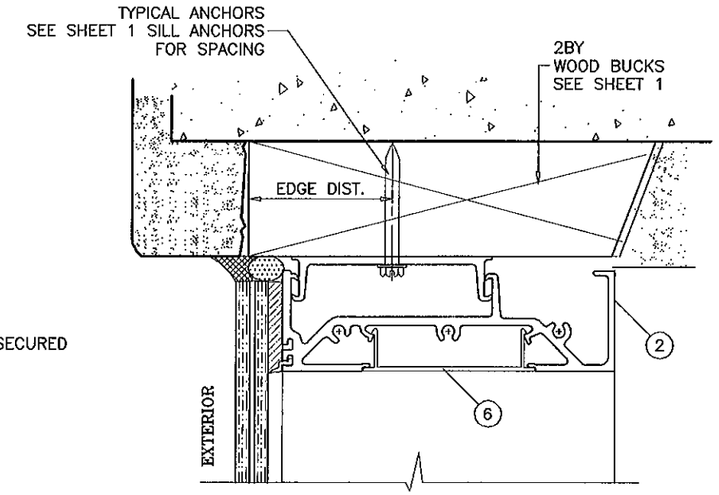

WOOD/METAL STRUCTURES NOT BY CRAWFORD TRACEY, MUST SUPPORT LOADS IMPOSED BY GLAZING SYSTEM AND TRANSFER THEM TO THE BUILDING STRUCTURE.

TYPICAL ANCHORS: SEE ELEV. FOR SPACING

TYPE 'AA'– 5/16" DIA. ULTRACON BY 'ELCO' (Fu=177 KSI, Fy=155 KSI)
INTO 2BY WOOD BUCKS OR WOOD STRUCTURES
1–3/8" MIN. PENETRATION INTO WOOD

TYPE 'A'– 5/16" DIA. ULTRACON BY 'ELCO' (Fu=177 KSI, Fy=155 KSI)
THRU 1BY BUCKS INTO CONC. OR MASONRY
1–1/4" MIN. EMBED INTO CONC. OR MASONRY

TYPE 'B'– 1/4" DIA. ULTRACON BY 'ELCO' (Fu=177 KSI, Fy=155 KSI)
DIRECTLY INTO CONC. OR MASONRY
1–1/4" MIN. EMBED INTO CONC. OR MASONRY

TYPE 'C'– 1/4" DIA TEKS OR SELF DRILLING SCREWS (GRADE 5 CRS)
INTO METAL STRUCTURES (MIN. 1/8" EMBED INTO SUBSTRATE)
STEEL : 1/8" THK. MIN. (Fy = 36 KSI MIN.)
ALUMINUM : 1/8" THK. MIN. (6063–T5 MIN.)
(STEEL IN CONTACT WITH ALUMINUM TO BE PLATED OR PAINTED)

TYPICAL EDGE DISTANCE

INTO CONCRETE AND MASONRY = 2–1/2" MIN.
INTO WOOD STRUCTURE = 1–1/4" MIN.
INTO METAL STRUCTURE = 3/4" MIN.

CONCRETE AT HEAD, SILL OR JAMBS f'c = 3000 PSI MIN. (EXCEPT AS NOTED)
C–90 HOLLOW/FILLED BLOCK AT JAMBS f'm = 2000 PSI MIN.

TYPE 'D'– 3/8" WEDGE BOLTS BY 'POWER FASTENERS' (SEE SHEET 7)

PRODUCT REVISED
in complying with the Florida
Building Code
Acceptance No 12-0223.37
Expiration Date 3/2/16
By
Miami Dade Product Control

Engr: JAVAD AHMAD
CIVIL
FLA. PE # 70592
C.A.N. 3538
FEB 15 2012

AL-FAROOQ CORPORATION
ENGINEERS & PRODUCT DEVELOPMENT
1235 S.W. 87 AVE
MIAMI, FLORIDA 33174
TEL. (305) 264-8100 FAX. (305) 262-6978

STORE\W04–104CTC

PRO–TECH 7SG ALUM CURTAIN WALL SYSTEM (S.M.I.)

CRAWFORD TRACEY CORPORATION
3301 SW 13TH DRIVE
DEERFIELD BEACH, FL. 33442–8101
TEL. (954) 698–6888 FAX. (954) 698–6889

revisions:

no	date	by	description
E	08.19.08		REV. PER BCCO COMMENTS
F	11.11.10		GENERAL REVISION
G	03.02.11		REV. PER BCCO COMMENTS
H	05.09.11		NO CHANGE THIS SHEET
I	01.16.12		NO CHANGE THIS SHEET

date: 12–29–04
scale: 3/8" = 1"
dr. by: HAMID
chk. by:

drawing no.
W04–104

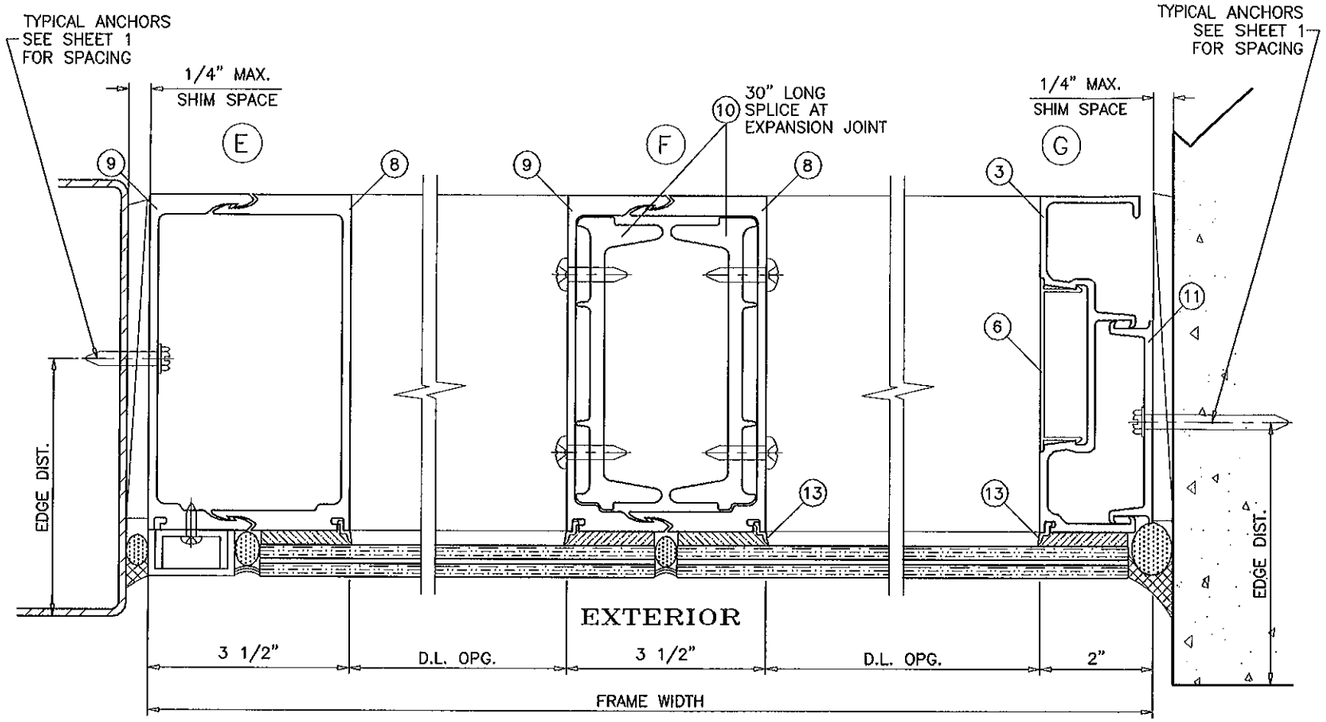

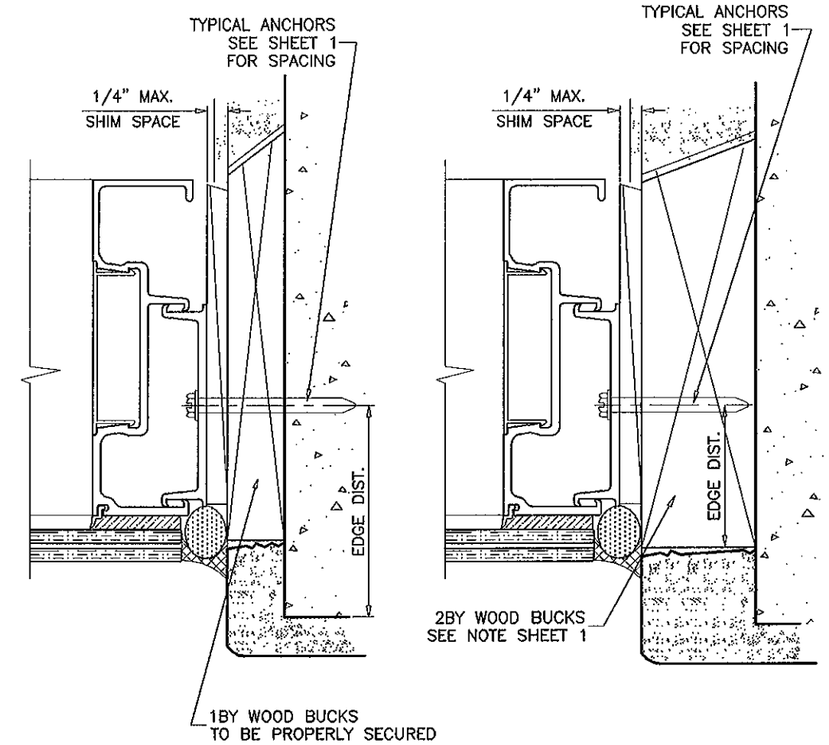

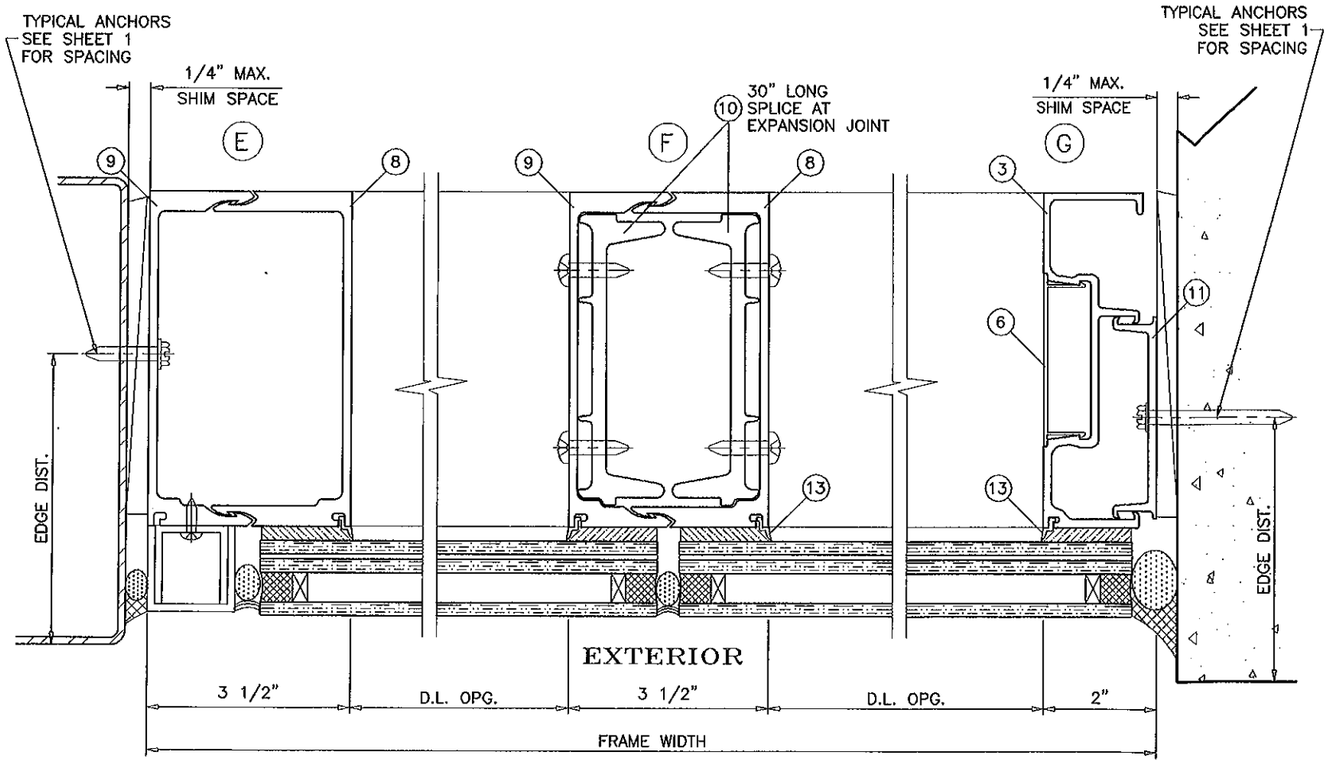

PRODUCT REVISED
to comply with the Florida
Building Code
Acceptance No. 12-0223.37
Expiration Date 3/2/16
Miami Dade Product Control

Engr: JAVAD AHMAD
CIVIL
FLA. PE # 70592
C.A.N. 3538

FEB 15 2012

AL-FAROOQ CORPORATION
ENGINEERS & PROJECT DEVELOPMENT
1235 S.W. 87 AVE
MIAMI, FLORIDA 33174
TEL. (305) 264-8100 FAX. (305) 262-6978

STORE\W04-104CTC

PRO-TECH 7SG ALUM CURTAIN WALL SYSTEM (S.M.I.)

CRAWFORD TRACEY CORPORATION
3301 SW 13TH DRIVE
DEERFIELD BEACH, FL. 33442-8101
TEL. (954) 698-6888 FAX. (954) 698-6889

revisions:

no	date	by	description
E	08.19.08		REV. PER BCCO COMMENTS
F	11.11.10		GENERAL REVISION
G	03.02.11		REV. PER BCCO COMMENTS
H	05.09.11		REV. PER BNC COMMENTS
I	01.16.12		NO CHANGE THIS SHEET

date: 12-29-04
scale: 3/8" = 1"
dr. by: HAMID
chk. by:

drawing no.
W04-104

sheet 10 of 17

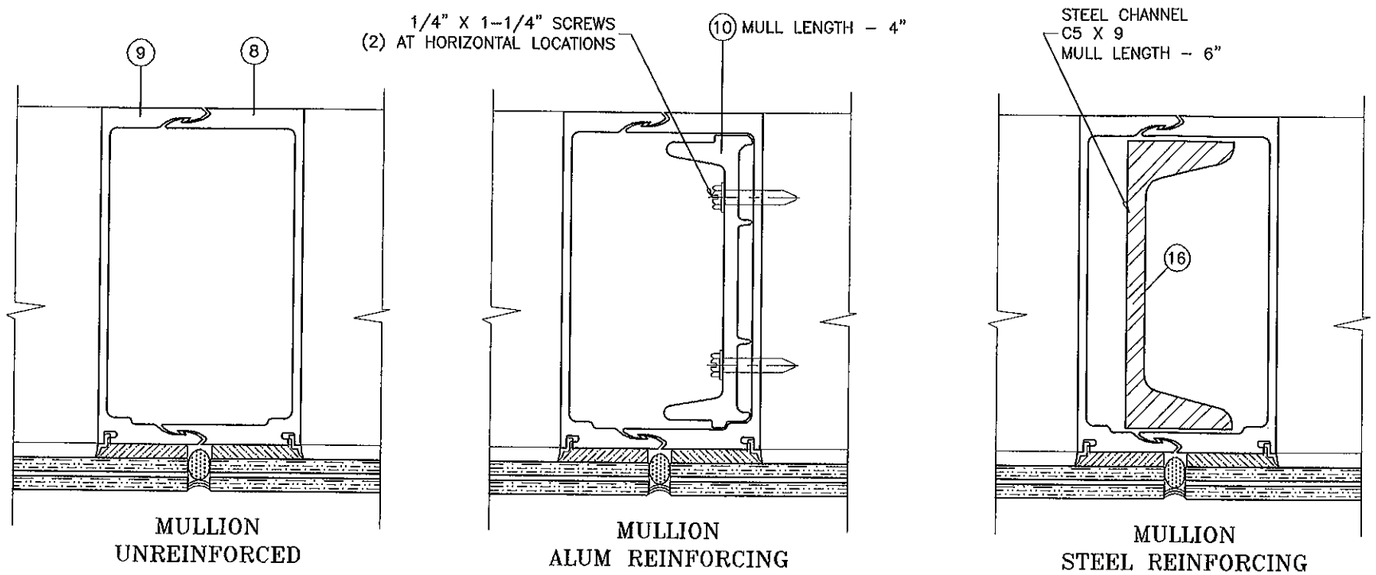

EXTERIOR

PRODUCT REVISED
in complying with the Florida Building Code
Acceptance No. 12-0223.37
Expiration Date 3/2/16
By Ishwar L. Chauhan
Miami Dade Product Control

Engr: JAVAD AHMAD
CIVIL
FLA. PE # 70592
C.A.N. 3538

FEB 15 2012

AL-FAROOQ CORPORATION
ENGINEERS & PRODUCT DEVELOPMENT
1235 S.W. 87 AVE
MIAMI, FLORIDA 33174
TEL. (305) 264-8100 FAX. (305) 262-6978

STORE\W04-104CTC

PRO-TECH 7SG ALUM CURTAIN WALL SYSTEM (S.M.I.)

CRAWFORD TRACEY CORPORATION
3301 SW 13TH DRIVE
DEERFIELD BEACH, FL. 33442-8101
TEL. (954) 698-6888 FAX. (954) 698-6889

revisions:

no	date	by	description
E	08.19.08		NO CHANGE THIS SHEET
F	11.11.10		GENERAL REVISION
G	03.02.11		REV. PER BCCO COMMENTS
H	05.09.11		NO CHANGE THIS SHEET
I	01.16.12		NO CHANGE THIS SHEET

date: 12-29-04
scale: 3/8" = 1"
dr. by: HAMID
chk. by:

drawing no.
W04-104

sheet 11 of 17

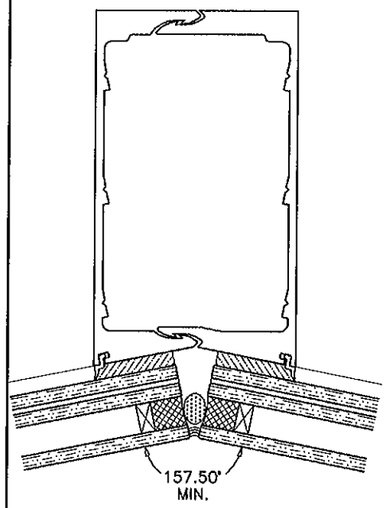

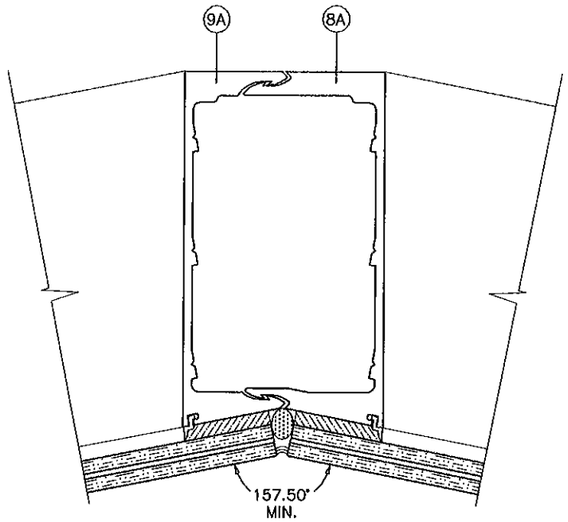

MULLION
UNREINFORCED
MAX. L = 120 IN.

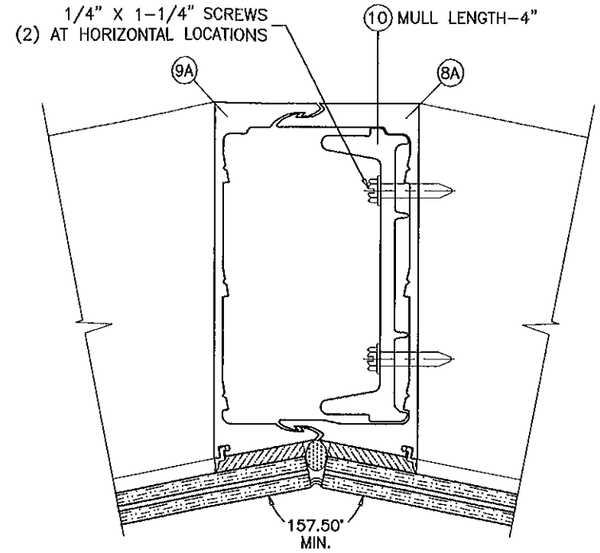

MULLION
ALUM REINFORCING

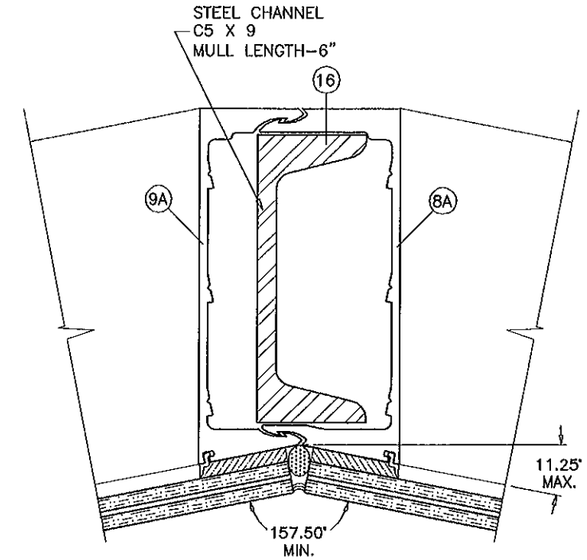

MULLION
STEEL REINFORCING

EXTERIOR

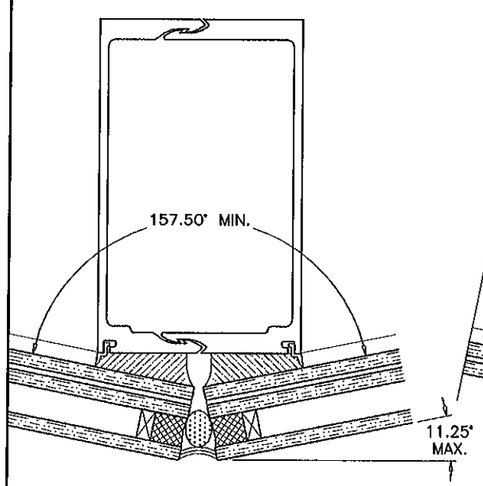

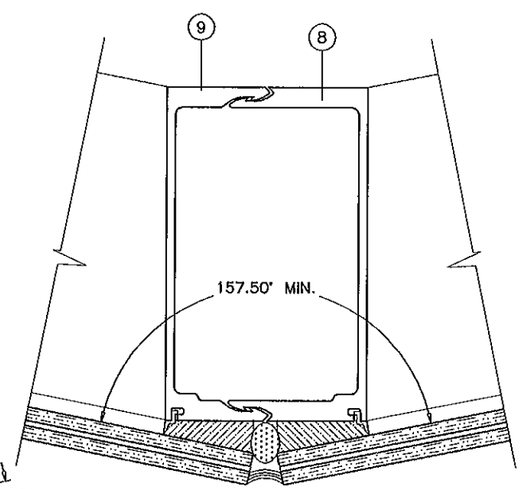

MULLION
UNREINFORCED
MAX. L = 120 IN.

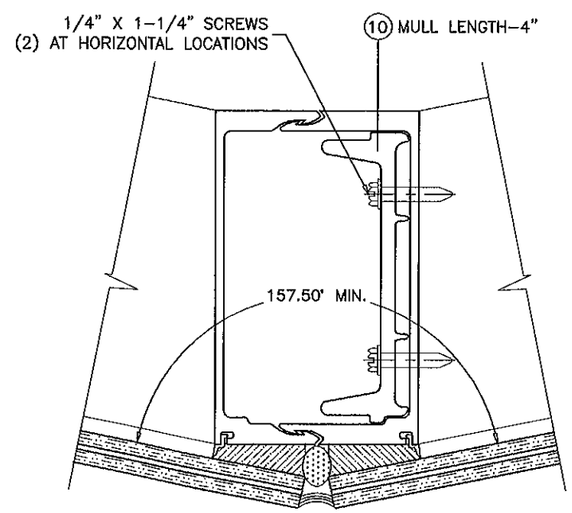

MULLION
ALUM REINFORCING

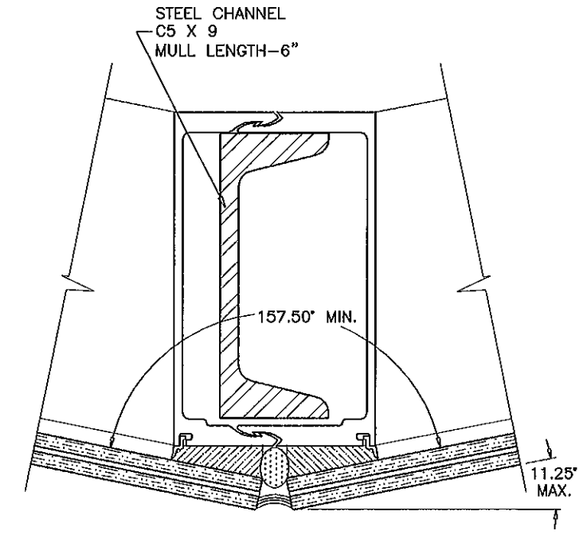

MULLION
STEEL REINFORCING

EXTERIOR

Engr: JAVAD AHMAD
CIVIL
FLA. PE # 70592
O.A.N. 3538

FEB 1 6 2012

PRODUCT REVISED
as complying with the Florida
Building Code
Acceptance No. 12-0223.37
Expiration Date 3/2/12
By
Miami Dade Product Control

AL-FAROOQ CORPORATION
ENGINEERS & PRODUCT DEVELOPMENT
1235 S.W. 87 AVE
MIAMI, FLORIDA 33174
TEL (305) 264-8100 FAX. (305) 262-6978

STORE\W04-104CTC

PRO-TECH 7SG ALUM CURTAIN WALL SYSTEM (S.M.I.)

CRAWFORD TRACEY CORPORATION
3301 SW 13TH DRIVE
DEERFIELD BEACH, FL. 33442-8101
TEL (954) 698-6888 FAX. (954) 698-6889

revisions:

no	date	by	description
E	08.19.08		REV. PER BCCO COMMENTS
F	11.11.10		GENERAL REVISION
G	03.02.11		REV. PER BCCO COMMENTS
H	05.09.11		NO CHANGE THIS SHEET
I	01.16.12		NO CHANGE THIS SHEET

date: 12-29-04
scale: 3/8" = 1"
dr. by: HAMID
chk. by:

drawing no.
W04-104

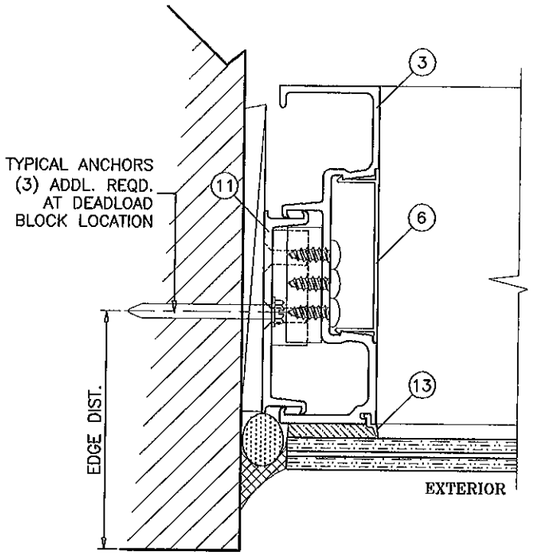

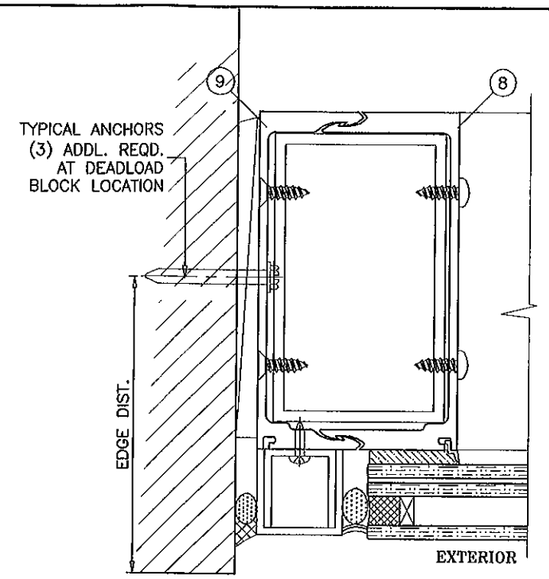

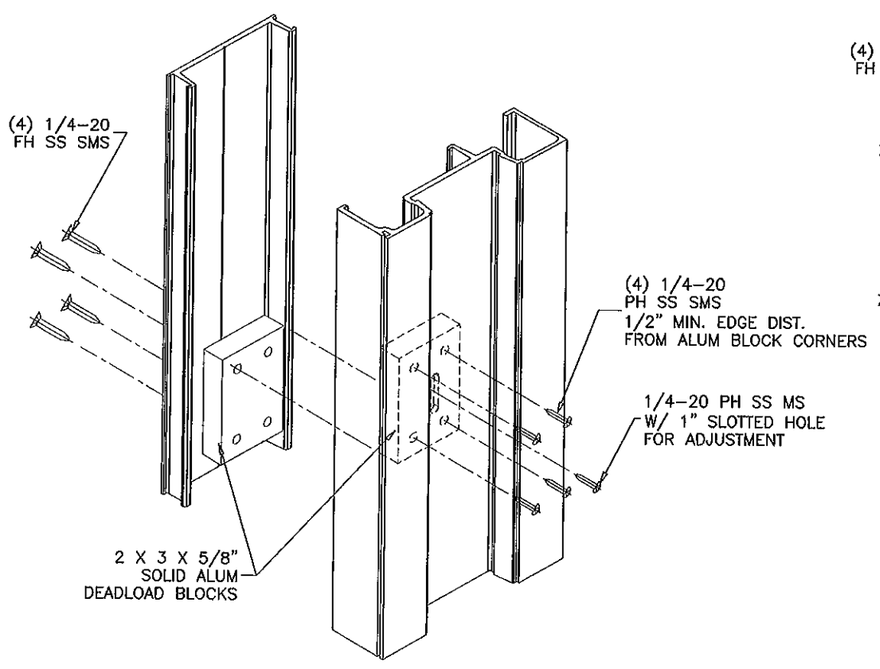

DEADLOAD BLOCKS DETAIL
TYPICAL JAMBS

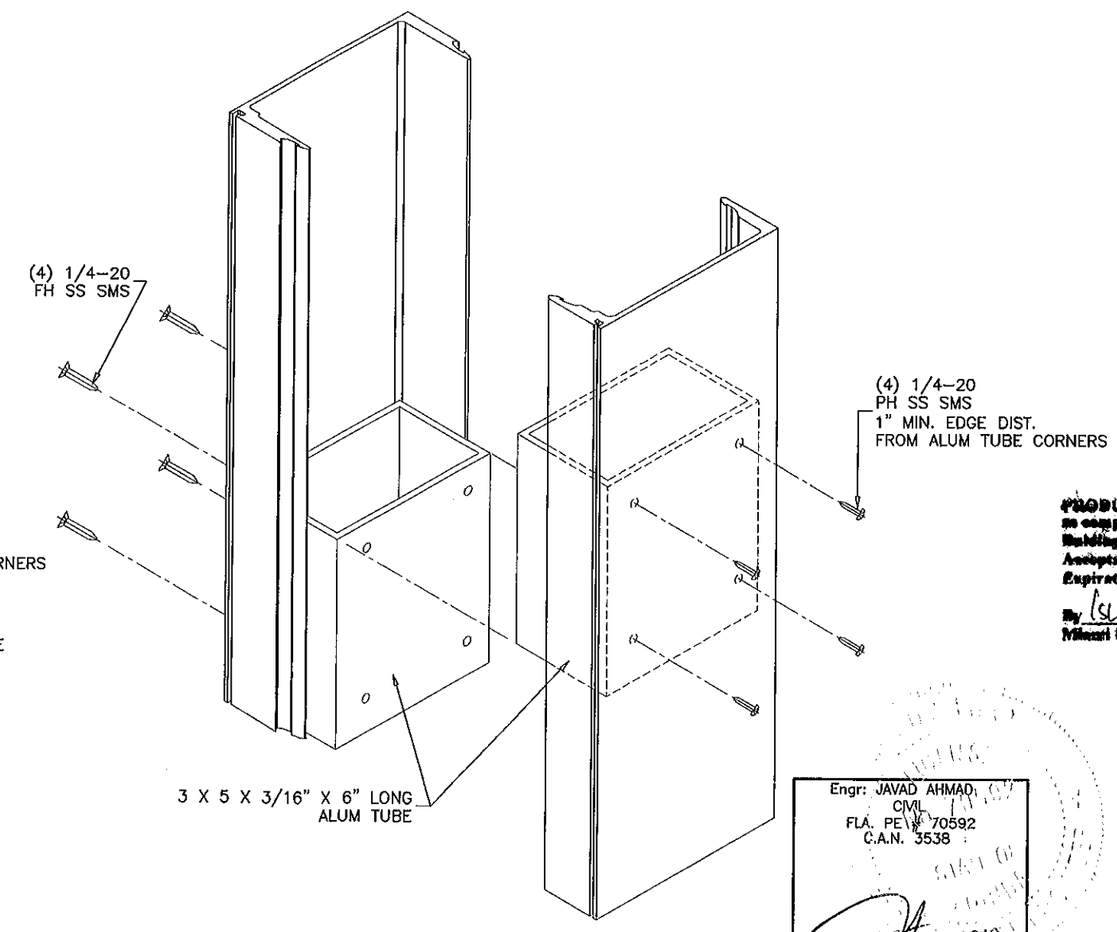

DEADLOAD BLOCKS DETAIL
ANCHORED MULLION AT JAMB

PRODUCT REVISED
so complying with the Florida
Building Code
Acceptance No. 12-0223.57
Expiration Date 3/21/12
By Chas. Chung
Miami Dade Product Control

Engr: JAVAD AHMAD
CIVIL
FLA. PE No. 70592
C.A.N. 3538

FEB 15 2012

AL-FAROOQ CORPORATION
ENGINEERS & PRODUCT DEVELOPMENT
1235 S.W. 87 AVE
MIAMI, FLORIDA 33174
TEL. (305) 264-8100 FAX. (305) 262-6978

STORE\W04-104CTC

PRO-TECH 7SG ALUM CURTAIN WALL SYSTEM (S.M.I.)

CRAWFORD TRACEY CORPORATION
3301 SW 13TH DRIVE
DEERFIELD BEACH, FL. 33442-8101
TEL. (954) 698-6888 FAX. (954) 698-6889

revisions:

no	date	by	description
E	08.19.08		REV. PER BCCO COMMENTS
F	11.11.10		GENERAL REVISION
G	03.02.11		REV. PER BCCO COMMENTS
H	05.09.11		NO CHANGE THIS SHEET
I	01.16.12		NO CHANGE THIS SHEET

date: 12-29-04
scale: 3/8" = 1"
dr. by: HAMID
chk. by:

drawing no.
W04-104

INTERMEDIATE ANCHOR TYPE ' I '

WIND LOAD ≤ 2250 LBS
DEAD LOAD ≤ 700 LBS

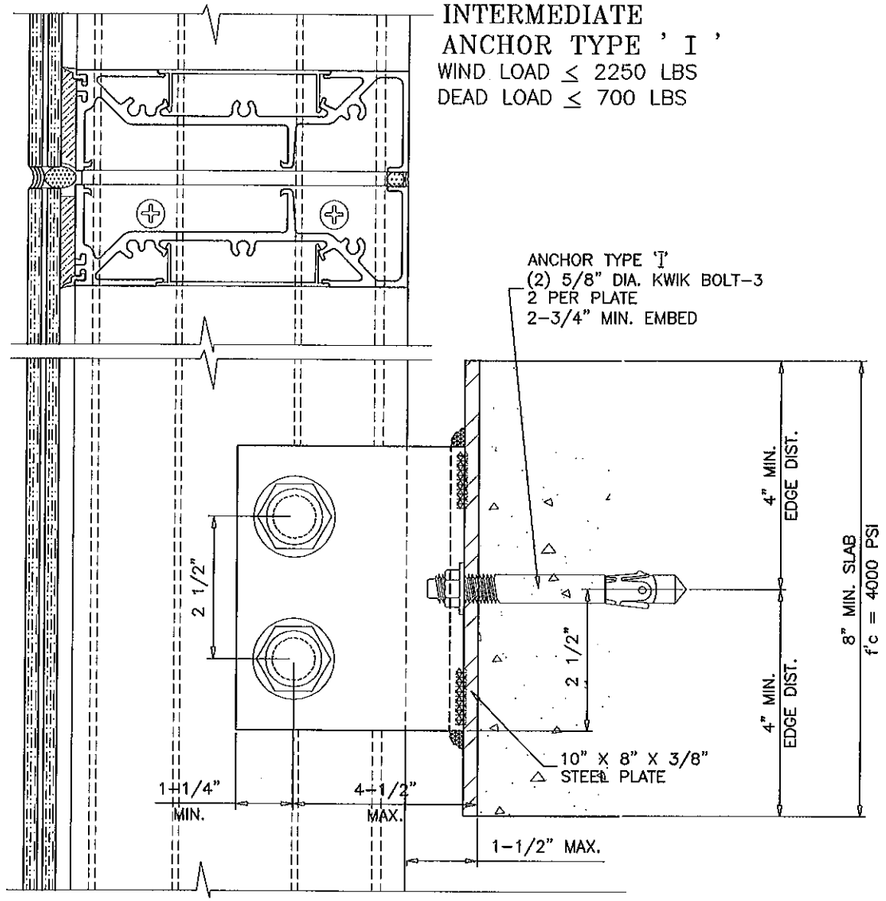

INTERMEDIATE ANCHOR TYPE ' II '

WIND LOAD ≤ 5500 LBS
DEAD LOAD ≤ 1050 LBS

INTERMEDIATE ANCHOR TYPE ' IIA '

WIND LOAD ≤ 7500 LBS
DEAD LOAD ≤ 1050 LBS

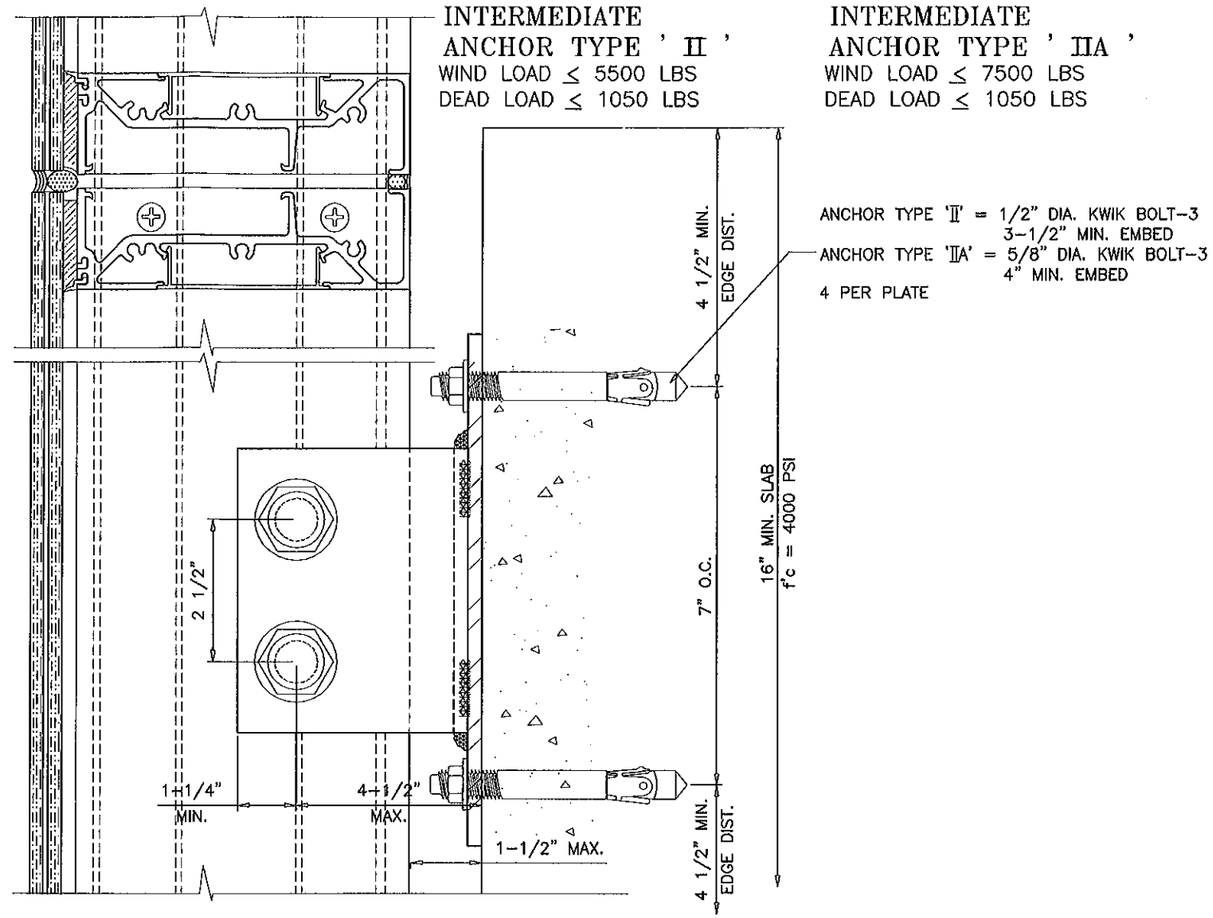

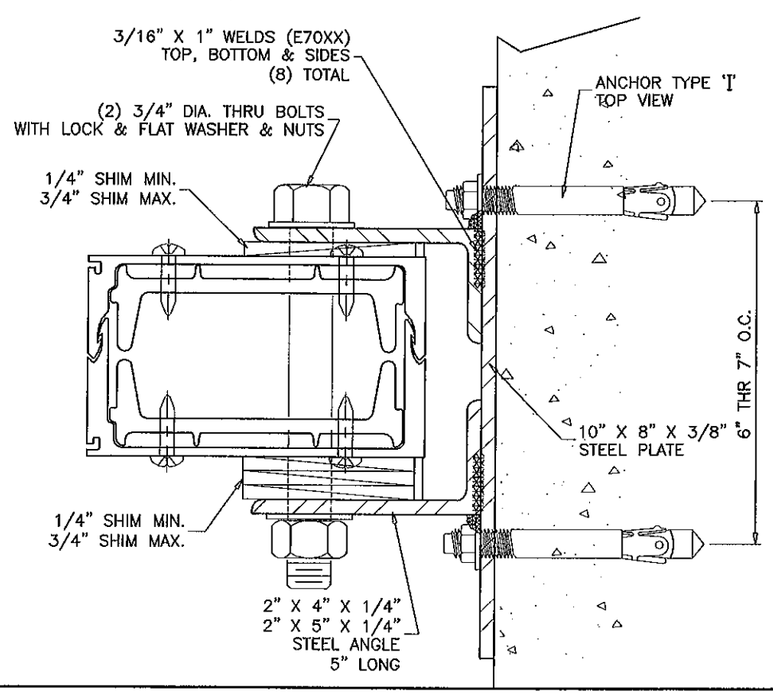

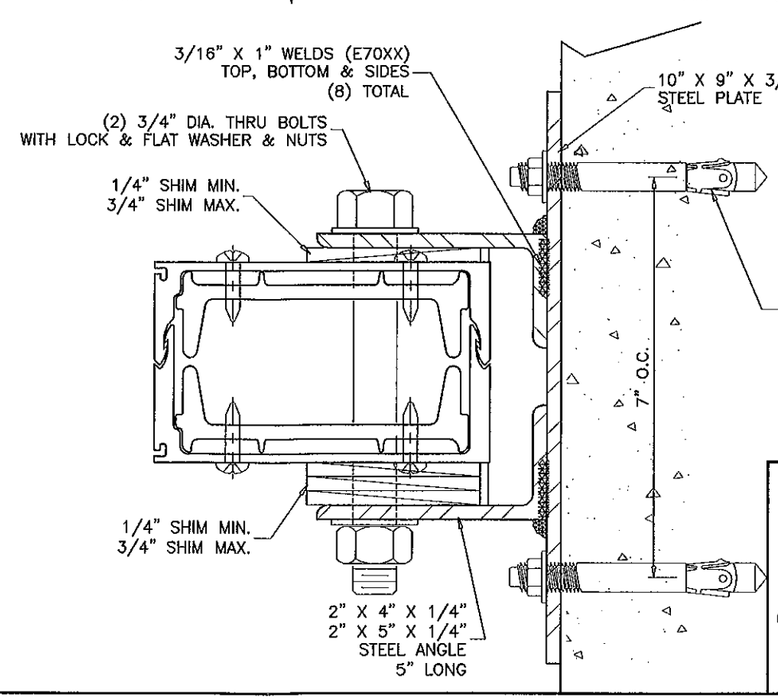

PRODUCT REVISED
In complying with the Florida Building Code
Acceptance No. 12-0223.37
Expiration Date 3.12.16
Date Product Control

Engr: JAVAD AHMAD
CIVIL
FLA. PE # 70582
C.A.N. 3538
FEB 15 2012

AL-FAROOQ CORPORATION
ENGINEERS & PRODUCT DEVELOPMENT
1235 S.W. 87 AVE
MIAMI, FLORIDA 33174
TEL. (305) 264-8100 FAX. (305) 262-6978
STORE\W04-104CTC

PRO-TECH 7SG ALUM CURTAIN WALL SYSTEM (S.M.I.)

CRAWFORD TRACEY CORPORATION
3301 SW 13TH DRIVE
DEERFIELD BEACH, FL. 33442-8101
TEL. (954) 698-6888 FAX. (954) 698-6889

revisions:

no	date	by	description
E	08.19.08		NO CHANGE THIS SHEET
F	11.11.10		GENERAL REVISION
G	03.02.11		REV. PER BCCO COMMENTS
H	05.09.11		REV. PER BNC COMMENTS
I	01.16.12		NO CHANGE THIS SHEET

date: 12-29-04
scale: 3/8" = 1"
dr. by: HAMID
chk. by:

drawing no.
W04-104

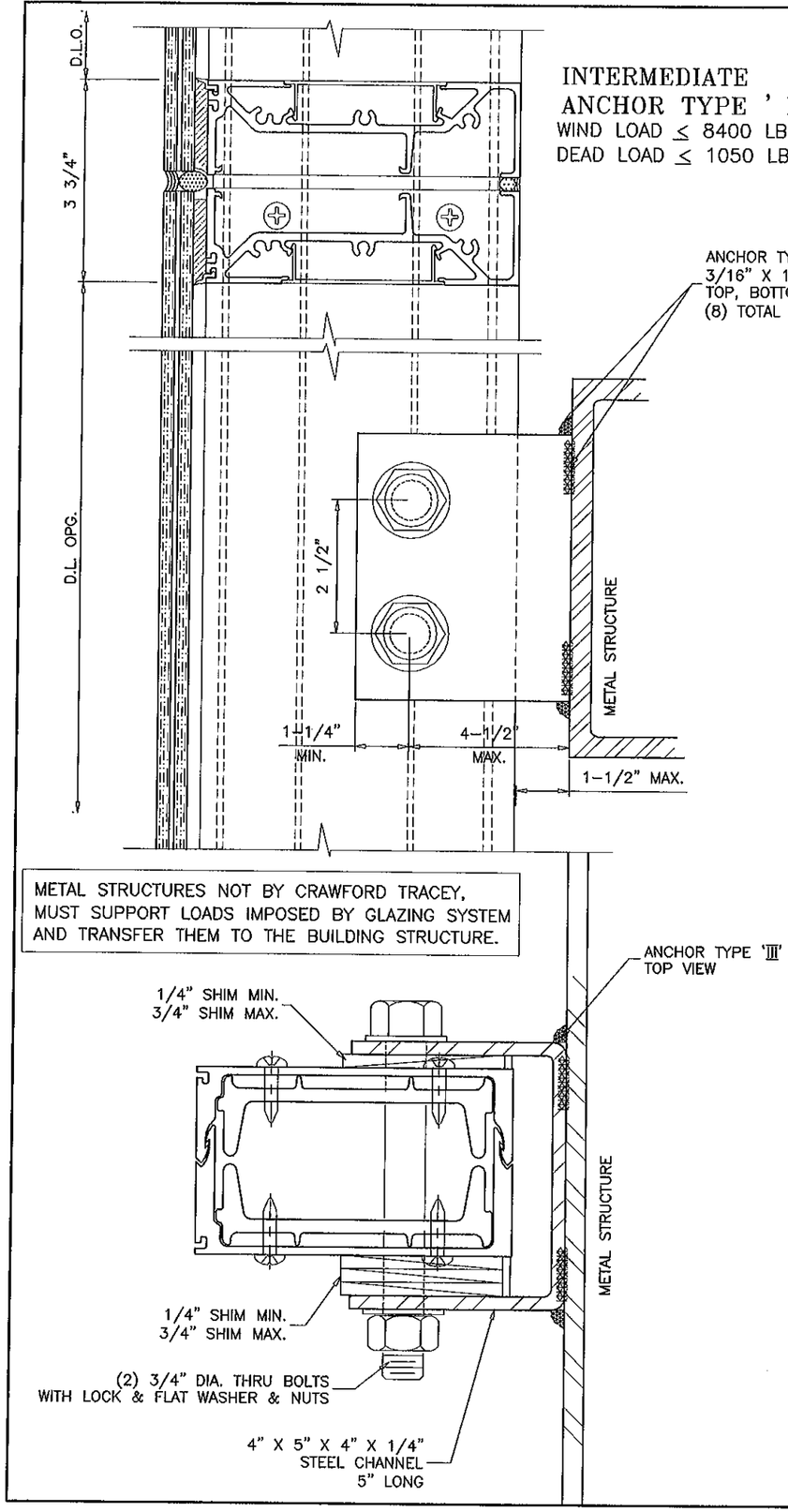

INTERMEDIATE
ANCHOR TYPE ' III '
WIND LOAD ≤ 8400 LBS
DEAD LOAD ≤ 1050 LBS

ANCHOR TYPE 'III'
3/16" X 1" WELDS (E70XX)
TOP, BOTTOM & SIDES
(8) TOTAL

METAL STRUCTURES NOT BY CRAWFORD TRACEY, MUST SUPPORT LOADS IMPOSED BY GLAZING SYSTEM AND TRANSFER THEM TO THE BUILDING STRUCTURE.

ANCHOR TYPE 'III'
TOP VIEW

PRODUCT REVISED
to comply with the Florida Building Code
Acceptance No 12-0223.37
Expiration Date 3/2/16
By [illegible]
Miami Dade Product Control

Engr: JAVAD AHMAD
CIVIL
FLA. PE # 70592
C.A.N. 3538
FEB 15 2012

AL-FAROOQ CORPORATION
ENGINEERS & PRODUCT DEVELOPMENT
1235 S.W. 87 AVE
MIAMI, FLORIDA 33174
TEL. (305) 264-8100 FAX. (305) 262-6978

STORE\W04-104CTC

PRO-TECH 7SG ALUM CURTAIN WALL SYSTEM (S.M.I.)

CRAWFORD TRACEY CORPORATION
3301 SW 13TH DRIVE
DEERFIELD BEACH, FL. 33442-8101
TEL. (954) 698-6888 FAX. (954) 698-6889

revisions:

no	date	by	description
E	08.19.08		REV. PER BCCO COMMENTS
F	11.11.10		GENERAL REVISION
G	03.02.11		REV. PER BCCO COMMENTS
H	05.09.11		REV. PER BNC COMMENTS
I	01.16.12		NO CHANGE THIS SHEET

date: 12-29-04
scale: 3/8" = 1"
dr. by: HAMID
chk. by:

drawing no.
W04-104

sheet 15 of 17

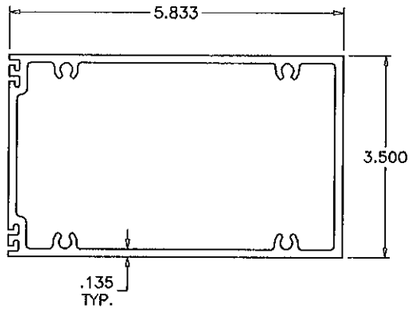

1 FRAME HEAD/HORIZONTAL

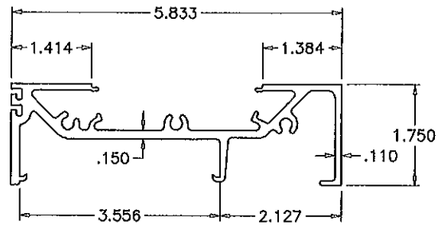

2 FRAME HEAD/SILL

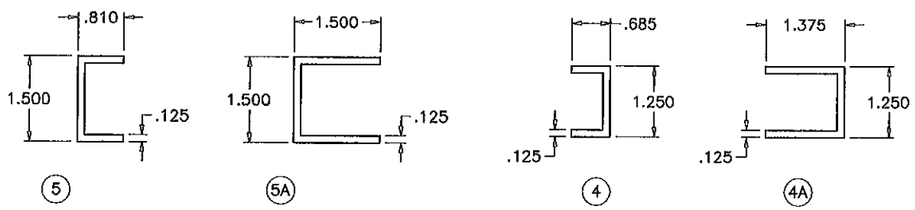

FILLER CHANNELS

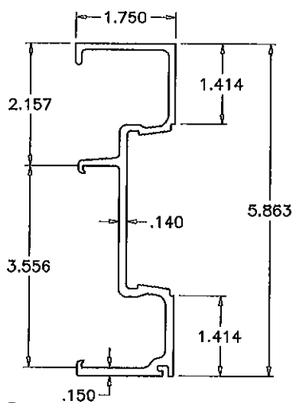

3 FRAME JAMB

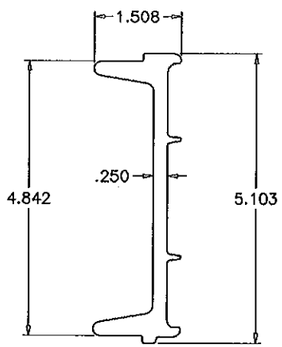

10 ALUM REINFORCING OR SPLICE

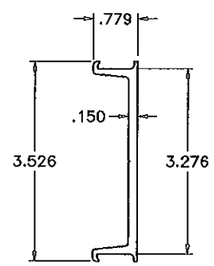

11 SUB BUCK

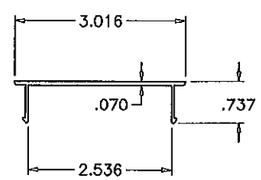

6 FRAME COVER

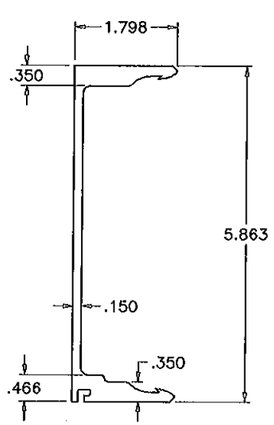

9 FEMALE JAMB/MULLION

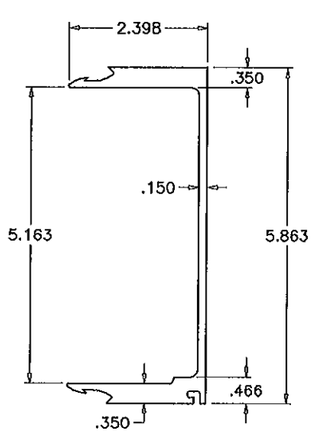

8 MALE JAMB/MULLION

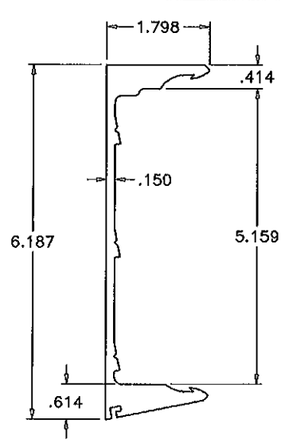

9A ALT. FEMALE MULLION

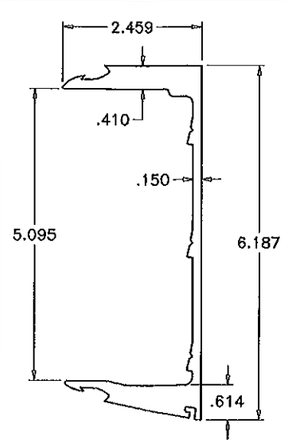

8A ALT. MALE MULLION

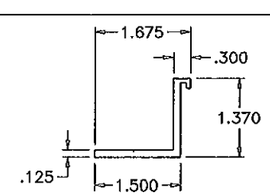

12 SETTING PIECE INSUL. LAM. GLASS

PRODUCT REVISED
in complying with the Florida
Building Code
Acceptance No 12-0223.37
Expiration Date 3/2/16
By
Miami Dade Product Control

Engr: JAVAD AHMAD
CIVIL
FLA. PE # 70592
C.A.N. 3538
FEB 15 2012

AL-FAROOQ CORPORATION
ENGINEERS & PRODUCT DEVELOPMENT
1235 S.W. 87 AVE
MIAMI, FLORIDA 33174
TEL. (305) 264-8100 FAX. (305) 262-6978

STORE\W04-104CTC

PRO-TECH 7SG ALUM CURTAIN WALL SYSTEM (S.M.I.)

CRAWFORD TRACEY CORPORATION
3301 SW 13TH DRIVE
DEERFIELD BEACH, FL. 33442-8101
TEL. (954) 698-6888 FAX. (954) 698-6889

revisions:

no	date	by	description
E	08.19.08		NO CHANGE THIS SHEET
F	11.11.10		GENERAL REVISION
G	03.02.11		NO CHANGE THIS SHEET
H	05.09.11		REV. PER BNC COMMENTS
I	01.16.12		NO CHANGE THIS SHEET

date: 12-29-04
scale: 3/8" = 1"
dr. by: HAMID
chk. by:

drawing no.
W04-104

ITEM NO.	PART NO.	QUANTITY	DESCRIPTION	MATERIAL	MANF./SUPPLIER/REMARKS
1	170H342	AS REQD.	FRAME HEAD/HORIZONTAL	6105-T5/6005A-T61	–
2	170P176	AS REQD.	FRAME HEAD/SILL	6105-T5/6005A-T61	–
3	170J176	AS REQD.	FRAME JAMB	6105-T5/6005A-T61	–
4	–	AS REQD.	INT. FILLER CHANNEL (LAM. GLASS)	ALUMINUM	–
4A	–	AS REQD.	INT. FILLER CHANNEL (LAM. INSUL. GLASS)	ALUMINUM	–
5	–	AS REQD.	EXT. FILLER CHANNEL (LAM. GLASS)	ALUMINUM	–
5A	–	AS REQD.	EXT. FILLER CHANNEL (LAM. INSUL. GLASS)	ALUMINUM	–
6	T30U119	AS REQD.	SNAP IN COVER	6063-T6/6005A-T61	–
8	170M113	AS REQD.	MALE JAMB/MULLION	6105-T5/6005A-T61	–
8A	170M115	AS REQD.	ALT. MALE MULLION	6105-T5/6005A-T61	–
9	170M114	AS REQD.	FEMALE JAMB/MULLION	6105-T5/6005A-T61	–
9A	170M116	AS REQD.	ALT. FEMALE MULLION	6105-T5/6005A-T61	–
10	170R140	AS REQD.	SPLICE	6105-T5/6005A-T61	45" LONG
11	B32B070	AS REQD.	SUB-BUCK	6105-T5/6005A-T61	–
12	170-116	AS REQD.	5" LONG SETTING PIECE (LAM. INSUL. GLASS)	6105-T5/6005A-T61	AT 1/4 POINTS
13	#2	AS REQD.	GLAZING SPACER	POLYPROPYLENE	–
15	1/4"X1-1/4"	AS REQD.	FRAME ASSEMBLY SCREWS	ST. STEEL	PAN HEAD PHILLIPS
16	C5 X 9	AS REQD.	STEEL CHANNEL	–	–
17	–	AS REQD.	SETTING BLOCK (1/16" X 1")	NEOPRENE	AT QUARTER POINTS

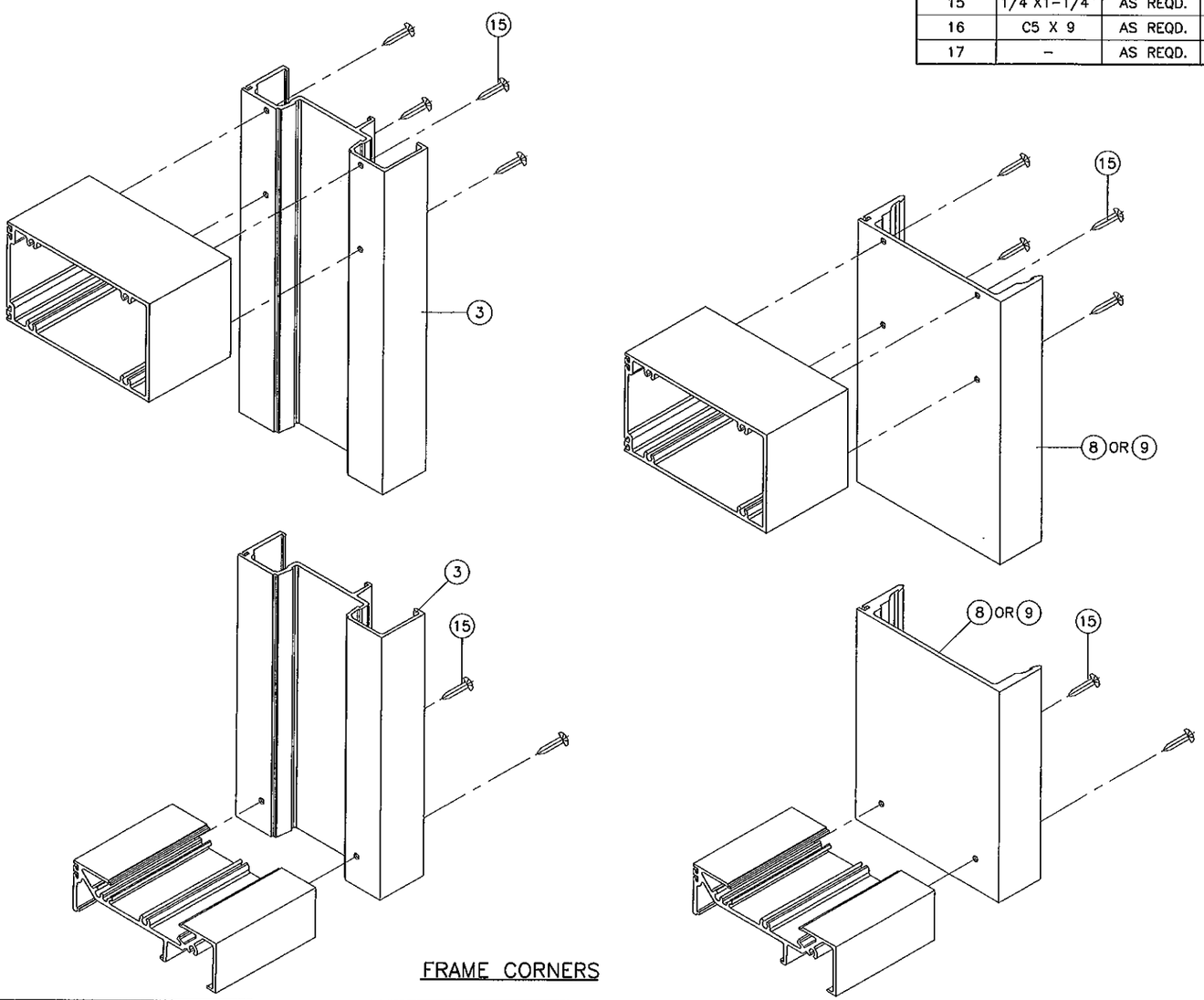

FRAME CORNERS

PRODUCT REVISED
to complying with the Florida Building Code
Acceptance No 12-0223.37
Expiration Date MAY 02, 2016
By Shea Williams
Product Data/Product Control

Engr: JAVAD AHMAD
CIVIL
FLA. PE # 70592
C.A.N. 3538
FEB 15 2012

AL-FAROOQ CORPORATION
ENGINEERS & PRODUCT DEVELOPMENT
1235 S.W. 87 AVE
MIAMI, FLORIDA 33174
TEL. (305) 264-8100 FAX. (305) 262-6978

STORE\W04-104CTC

PRO-TECH 7SG ALUM CURTAIN WALL SYSTEM (S.M.I.)

CRAWFORD TRACEY CORPORATION
3301 SW 13TH DRIVE
DEERFIELD BEACH, FL. 33442-8101
TEL. (954) 698-6888 FAX. (954) 698-6889

revisions:

no.	date	by	description
E	08.19.08		NO CHANGE THIS SHEET
F	11.11.10		GENERAL REVISION
G	03.02.11		NO CHANGE THIS SHEET
H	05.09.11		REV. PER BNC COMMENTS
I	01.16.12		UPDATED TO 2010 FBC

date: 12-29-04
scale: 3/8" = 1"
dr. by: HAMID
chk. by:

drawing no.
W04-104