MIAMI-DADE COUNTY
DEPARTMENT OF PERMITTING, ENVIRONMENT, AND REGULATORY AFFAIRS (PERA)
BOARD AND CODE ADMINISTRATION DIVISION

MIAMI-DADE COUNTY
PRODUCT CONTROL SECTION
11805 SW 26 Street, Room 208
Miami, Florida 33175-2474
T (786) 315-2590 F (786) 315-2599
www.miamidade.gov/pera

NOTICE OF ACCEPTANCE (NOA)

Crawford Tracey Corporation
3301 SW 13th Drive
Deerfield Beach, FL 33442

SCOPE:

This NOA is being issued under the applicable rules and regulations governing the use of construction materials. The documentation submitted has been reviewed and accepted by Miami-Dade County PERA - Product Control Section to be used in Miami Dade County and other areas where allowed by the Authority Having Jurisdiction (AHJ).

This NOA shall not be valid after the expiration date stated below. The Miami-Dade County Product Control Section (In Miami Dade County) and/or the AHJ (in areas other than Miami Dade County) reserve the right to have this product or material tested for quality assurance purposes. If this product or material fails to perform in the accepted manner, the manufacturer will incur the expense of such testing and the AHJ may immediately revoke, modify, or suspend the use of such product or material within their jurisdiction. PERA reserves the right to revoke this acceptance, if it is determined by Miami-Dade County Product Control Section that this product or material fails to meet the requirements of the applicable building code.

This product is approved as described herein, and has been designed to comply with the Florida Building Code, including the High Velocity Hurricane Zone.

DESCRIPTION: Series "Pro–Tech 45SG" Aluminum Window Wall System – L.M.I.

APPROVAL DOCUMENT: Drawing No. **W05–31,** titled "Pro–Tech 45SG Alum. Window Wall System (L.M.I.)", sheets 1 through 8 of 8, dated 06/24/05, with revision D dated 01/17/12, prepared by Al–Farooq Corporation, signed and sealed by Javad Ahmad, P.E., bearing the Miami–Dade County Product Control Revision stamp with the Notice of Acceptance number and expiration date by the Miami–Dade County Product Control Section.

MISSILE IMPACT RATING: Large and Small Missile Impact Resistant.

LABELING: Each unit shall bear a permanent label with the manufacturer's name or logo, city, state, model/series, and following statement: "Miami-Dade County Product Control Approved", unless otherwise noted herein.

RENEWAL of this NOA shall be considered after a renewal application has been filed and there has been no change in the applicable building code negatively affecting the performance of this product.

TERMINATION of this NOA will occur after the expiration date or if there has been a revision or change in the materials, use, and/or manufacture of the product or process. Misuse of this NOA as an endorsement of any product, for sales, advertising or any other purposes shall automatically terminate this NOA. Failure to comply with any section of this NOA shall be cause for termination and removal of NOA.

ADVERTISEMENT: The NOA number preceded by the words Miami-Dade County, Florida, and followed by the expiration date may be displayed in advertising literature. If any portion of the NOA is displayed, then it shall be done in its entirety.

INSPECTION: A copy of this entire NOA shall be provided to the user by the manufacturer or its distributors and shall be available for inspection at the job site at the request of the Building Official.

This NOA **revises NOA # 10-1213.12** and consists of this page 1 and evidence pages E-1 and E-2, as well as approval document mentioned above.

The submitted documentation was reviewed by **Manuel Perez, P.E.**

MIAMI-DADE COUNTY APPROVED

4/26/12

NOA No. 12-0223.40
Expiration Date: June 22, 2016
Approval Date: May 03, 2012

NOTICE OF ACCEPTANCE: EVIDENCE SUBMITTED

A. DRAWINGS

1. Manufacturer's die drawings and sections.
2. Drawing No **W05–31,** titled "Pro–Tech 45SG Alum. Window Wall System (L.M.I.)", sheets 1 through 8 of 8, dated 06/24/05, with revision D dated 01/17/12, prepared by Al–Farooq Corporation, signed and sealed by Javad Ahmad, P.E.

B. TESTS

1. Test reports on: 1) Air Infiltration Test, per FBC, TAS 202–94
   2) Uniform Static Air Pressure Test, Loading per FBC TAS 202–94
   3) Water Resistance Test, per FBC, TAS 202–94
   4) Large Missile Impact Test per FBC, TAS 201–94
   5) Small Missile Impact Test per FBC, TAS 201–94
   6) Cyclic Wind Pressure Loading per FBC, TAS 203–94

   along with marked–up drawings and installation diagram of a series Pro-Tech 45SG aluminum window wall system, prepared by American Test Lab of South Florida, Test Report No. **ATLSF–1129.01–07**, dated 01/29/08, signed and sealed by Henry Hattem, P.E.

   (Submitted under previous NOA No.08–0415.08)
2. Test reports on: 1) Air Infiltration Test, per FBC, TAS 202–94
   2) Uniform Static Air Pressure Test, Loading per FBC TAS 202–94
   3) Water Resistance Test, per FBC, TAS 202–94
   4) Large Missile Impact Test per FBC, TAS 201–94
   5) Cyclic Wind Pressure Loading per FBC, TAS 203–94

   along with marked–up drawings and installation diagram of a series Pro–Tech 45SG aluminum window wall system, prepared by American Test Lab of South Florida, Test Report No. **ATLSF–0310.01–05** dated 06/01/05, signed and sealed by Henry Hattem, P.E.

   (Submitted under previous NOA No.06–0119.10)

C. CALCULATIONS

1. Anchor verification calculations and structural analysis, complying with FBC–2007, prepared by Al–Farooq Corporation, dated 11/24/10, signed, sealed and dated by Javad Ahmad, P.E.

   (Submitted under previous NOA#10-1213.12)
2. Glazing complies with ASTM E1300-04

D. QUALITY ASSURANCE

1. Miami-Dade Department of Permitting, Environment, and Regulatory Affairs (PERA)

Manuel Perez, P.E.
Product Control Examiner
NOA No. 12-0223.40
Expiration Date: June 22, 2016
Approval Date: May 03, 2012

NOTICE OF ACCEPTANCE: EVIDENCE SUBMITTED

E. MATERIAL CERTIFICATIONS

1. Notice of Acceptance No. **11–0624.02** issued to **E.I. DuPont DeNemours & Co.**, Inc. for their "**DuPont SentryGlas® Interlayer**" dated 08/25/11, expiring on 01/14/17.
2. Notice of Acceptance No. **08–1224.04** issued to Solutia, Inc. for their "**Saflex Composites Glass Interlayer with PET Core**" dated 02/25/09, expiring on 12/11/13.
3. Notice of Acceptance No. **11–0325.05** issued to Solutia, Inc. for their "**Saflex and Vanceva clear and color interlayers**" dated 05/05/11, expiring on 05/21/16.

F. STATEMENTS

1. Statement letter of conformance, complying with FBC-2010, and of no financial interest, dated January 16, 2012, signed and sealed by Javad Ahmad, P.E.
2. Laboratory compliance letter for Test Report No. **ATLSF–1129.01–07**, issued by American Test Lab of South Florida, Inc., dated 01/29/08, signed and sealed by Henry Hattem, P.E.
   (Submitted under previous NOA No.08–0415.08)
3. Laboratory compliance letter for Test Report No. **ATLSF–0310.01–05**, issued by American Test Lab of South Florida, Inc., dated 06/01/05, signed and sealed by Henry Hattem, P.E.
   (Submitted under previous NOA No. 06–0119.10)

G. OTHERS

1. Notice of Acceptance No. **10–1213.12**, issued to Crawford Tracey Corporation for their Series "Pro–Tech 45SG" Aluminum Window Wall System – L.M.I.", approved on 04/14/11 and expiring on 06/22/16.

Manuel Perez

Manuel Perez, P.E.
Product Control Examiner
NOA No. 12-0223.40
Expiration Date: June 22, 2016
Approval Date: May 03, 2012

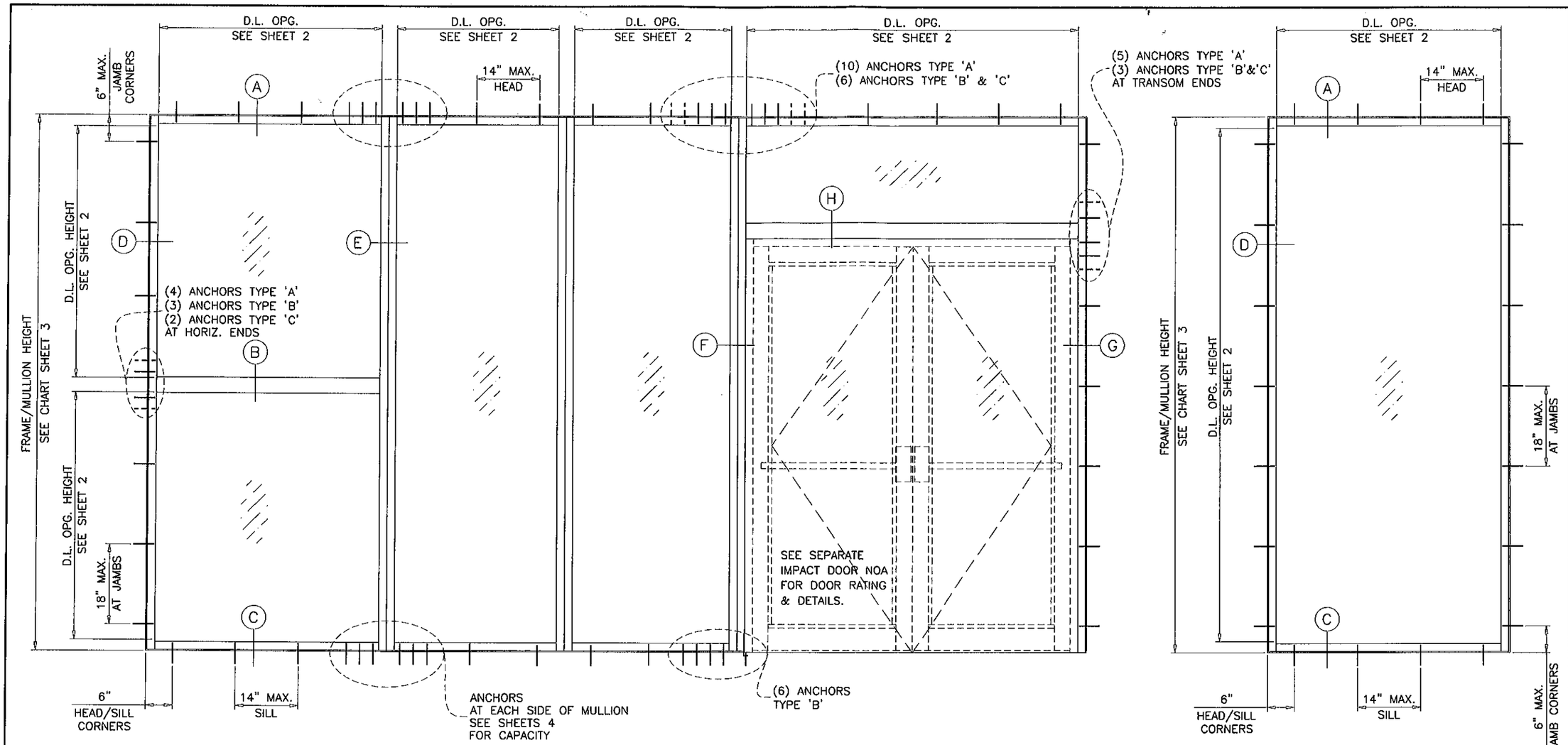

TYPICAL ELEVATIONS

PRO-TECH 45SG ALUM WINDOW WALL SYSTEM

THIS SYSTEM MAY BE USED IN CONJUNCTION WITH MIAMI-DADE COUNTY APPR'D LARGE MISSILE IMPACT RESISTANT DOORS. LOWER DESIGN PRESSURE FROM WINDOW WALL SYSTEM OR DOOR APPROVAL WILL APPLY TO ENTIRE SYSTEM.

CODE REQUIREMENTS FOR SAFEGUARDS MUST BE OBSERVED.

THIS PRODUCT HAS BEEN DESIGNED AND TESTED TO COMPLY WITH THE REQUIREMENTS OF THE FLORIDA BUILDING CODE INCLUDING HIGH VELOCITY HURRICANE ZONE (HVHZ).

WOOD BUCKS BY OTHERS, MUST BE ANCHORED PROPERLY TO TRANSFER LOADS TO THE STRUCTURE.

ANCHORS SHALL BE AS LISTED, SPACED AS SHOWN ON DETAILS, ANCHORS EMBEDMENT TO BASE MATERIAL SHALL BE BEYOND WALL DRESSING OR STUCCO.

ANCHORING OR LOADING CONDITIONS NOT SHOWN IN THESE DETAILS ARE NOT PART OF THIS APPROVAL.

A LOAD DURATION INCREASE IS USED IN DESIGN OF ANCHORS INTO WOOD ONLY.

MATERIALS INCLUDING BUT NOT LIMITED TO STEEL/METAL SCREWS, THAT COME INTO CONTACT WITH OTHER DISSIMILAR MATERIALS SHALL MEET THE REQUIREMENTS OF THE FLORIDA BLDG. CODE SECTION 2003.8.4.

THIS SYSTEM IS RATED FOR LARGE MISSILE IMPACT. SHUTTERS ARE NOT REQUIRED.

INSTRUCTIONS:

USE CHARTS AS FOLLOWS.

STEP 1 DETERMINE DESIGN WIND LOAD REQUIREMENTS BASED ON WIND VELOCITY, BLDG. HEIGHT, WIND ZONE USING APPLICABLE ASCE 7 STANDARD.

STEP 2 SEE CHARTS ON SHEETS 2 FOR DESIGN LOAD CAPACITY OF DESIRED GLASS SIZE.

STEP 3 CHECK MULLION CAPACITY FOR A GIVEN SPACING AND HEIGHT USING CHARTS ON SHEET 3 THE CAPACITY SHOULD EXCEED THE DESIGN LOAD.

STEP 4 USING CHART ON SHEETS 4 SELECT ANCHOR OPTION WITH DESIGN RATING MORE THAN DESIGN LOAD SPECIFIED IN STEP 1 ABOVE.

STEP 5 THE LOWEST VALUE RESULTING FROM STEPS 2, 3 AND 4 SHALL APPLY TO ENTIRE SYSTEM.

LAMINATED GLASS
LARGE MISSILE IMPACT

Engr: UAVAD AHMAD
CIVIL
FLA. PE # 70592
C.A.N. 3538
FEB 15 2012

PRODUCT REVISED
as complying with the Florida
Building Code
Acceptance No 12-0223.40
Expiration Date June 22, 2016
Miami Dade Product Control

AL-FAROOQ CORPORATION
ENGINEERS & PRODUCT DEVELOPMENT
1235 S.W. 87 AVE
MIAMI, FLORIDA 33174
TEL. (305) 264-8100 FAX. (305) 262-6978

STORE\W05-31CTC

PRO-TECH 45SG ALUM WINDOW WALL SYSTEM (L.M.I.)

CRAWFORD TRACEY CORPORATION
3301 SW 13TH DRIVE
DEERFIELD BEACH, FL. 33442-8101
TEL. (954) 698-6888 FAX. (954) 698-6889

revisions:

no	date	by	description
A	02.27.08		NOTES REV.
B	11.29.10		GENERAL REVISION
C	03.21.11		NO CHANGE THIS SHEET
D	01.17.12		UPDATED TO 2010 FBC

date: 06-24-05
scale: 1/2"=1'-0"
dr. by: HAMID
chk. by:

drawing no.
W05-31

sheet 1 of 8

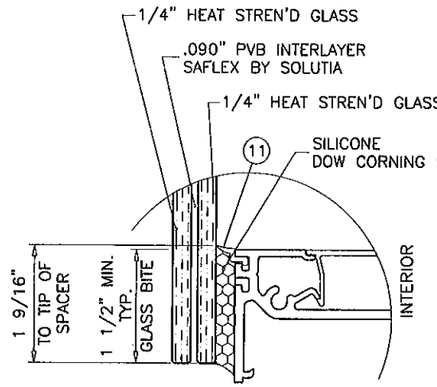

GLASS TYPE 'A'
9/16" OVERALL LAM. GLASS

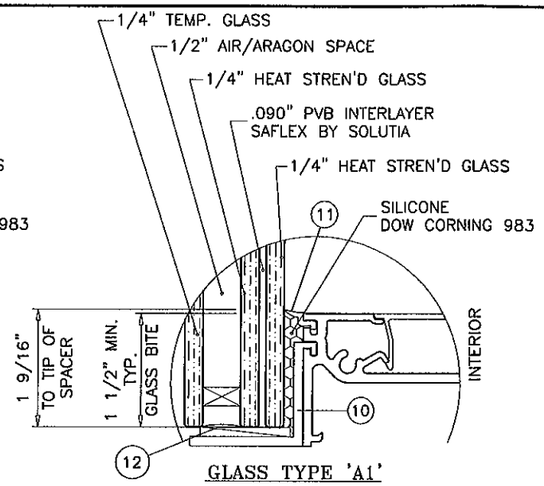

GLASS TYPE 'A1'
1-5/16" OVERALL INSUL. LAM. GLASS

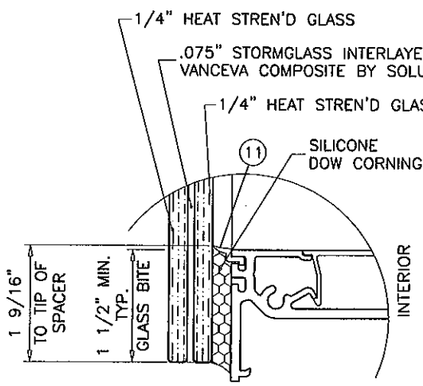

GLASS TYPE 'B'
9/16" OVERALL LAM. GLASS

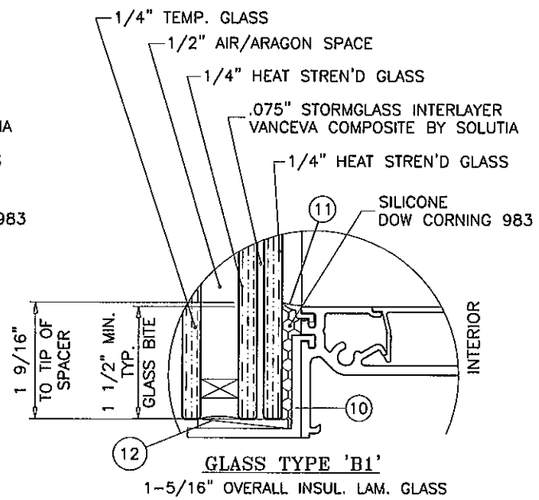

GLASS TYPE 'B1'
1-5/16" OVERALL INSUL. LAM. GLASS

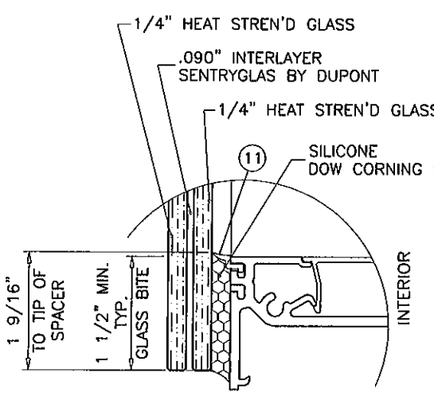

GLASS TYPE 'C'
9/16" OVERALL LAM. GLASS

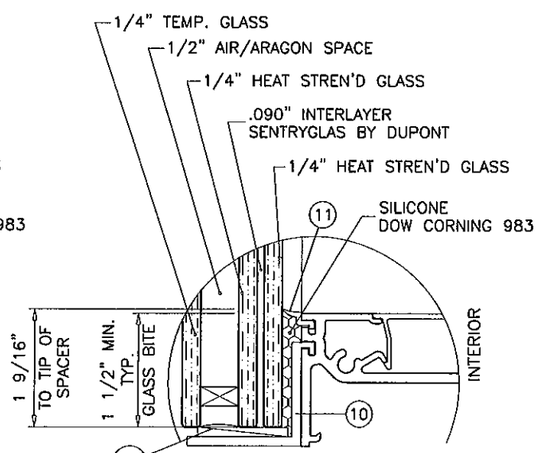

GLASS TYPE 'C1'
1-5/16" OVERALL INSUL. LAM. GLASS

GLAZING OPTIONS

GLASS LOAD CAPACITY – PSF				
NOMINAL DIMS.		GLASS TYPE 'A' & 'A1'	GLASS TYPE 'B' & 'C'	GLASS TYPE 'B1' & 'C1'
D.L.O. WIDTH	D.L.O. HEIGHT	EXT. (+) INT. (–)	EXT. (+) INT. (–)	EXT. (+) INT. (–)
24"	54"	80.0	100.0	100.0
30"		80.0	100.0	100.0
36"		80.0	100.0	100.0
42"		80.0	100.0	100.0
48"		80.0	100.0	100.0
54"		80.0	100.0	100.0
60"		80.0	100.0	100.0
66"		80.0	100.0	100.0
72"		80.0	100.0	100.0
24"	60"	80.0	100.0	100.0
30"		80.0	100.0	100.0
36"		80.0	100.0	100.0
42"		80.0	100.0	100.0
48"		80.0	100.0	100.0
54"		80.0	100.0	100.0
60"		80.0	100.0	100.0
66"		–	100.0	100.0
72"		–	100.0	100.0
24"	66"	80.0	100.0	100.0
30"		80.0	100.0	100.0
36"		80.0	100.0	100.0
42"		80.0	100.0	100.0
48"		80.0	100.0	100.0
54"		80.0	100.0	100.0
60"		–	100.0	100.0
66"		–	100.0	100.0
72"		–	100.0	100.0
24"	72"	80.0	100.0	100.0
30"		80.0	100.0	100.0
36"		80.0	100.0	100.0
42"		80.0	100.0	100.0
48"		80.0	100.0	100.0
54"		80.0	100.0	100.0
60"		–	100.0	100.0
66"		–	100.0	100.0
72"		–	100.0	100.0
24"	78"	80.0	100.0	100.0
30"		80.0	100.0	100.0
36"		80.0	100.0	100.0
42"		80.0	100.0	100.0
48"		80.0	100.0	100.0
54"		–	100.0	100.0
60"		–	100.0	100.0
66"		–	100.0	100.0
24"	84"	80.0	100.0	100.0
30"		80.0	100.0	100.0
36"		80.0	100.0	100.0
42"		80.0	100.0	100.0
48"		–	100.0	100.0
54"		–	100.0	100.0
60"		–	100.0	100.0

GLASS LOAD CAPACITY – PSF				
NOMINAL DIMS.		GLASS TYPE 'A' & 'A1'	GLASS TYPE 'B' & 'C'	GLASS TYPE 'B1' & 'C1'
D.L.O. WIDTH	D.L.O. HEIGHT	EXT. (+) INT. (–)	EXT. (+) INT. (–)	EXT. (+) INT. (–)
24"	90"	80.0	100.0	100.0
30"		80.0	100.0	100.0
36"		80.0	100.0	100.0
42"		80.0	100.0	100.0
48"		–	100.0	100.0
54"		–	100.0	100.0
24"	96"	80.0	100.0	100.0
30"		80.0	100.0	100.0
36"		80.0	100.0	100.0
42"		–	100.0	100.0
48"		–	100.0	100.0
54"		–	100.0	100.0
24"	102"	80.0	100.0	100.0
30"		80.0	100.0	100.0
36"		80.0	100.0	100.0
42"		–	100.0	100.0
48"		–	100.0	100.0
24"	108"	80.0	100.0	100.0
30"		80.0	100.0	100.0
36"		80.0	100.0	100.0
42"		–	100.0	100.0
48"		–	100.0	100.0
24"	114"	80.0	100.0	100.0
30"		80.0	100.0	100.0
36"		–	100.0	100.0
42"		–	100.0	100.0
24"	120"	80.0	100.0	100.0
30"		80.0	100.0	100.0
36"		–	100.0	100.0
42"		–	100.0	100.0
44-1/2"	116-1/2"	–	100.0	100.0
56-1/2"	68-1/2"	80.0	100.0	100.0
56-1/2"	92-1/2"	–	100.0	100.0

NOTE:
GLASS CAPACITIES ON THIS SHEET ARE BASED ON ASTM E1300-04 (3 SEC. GUSTS).

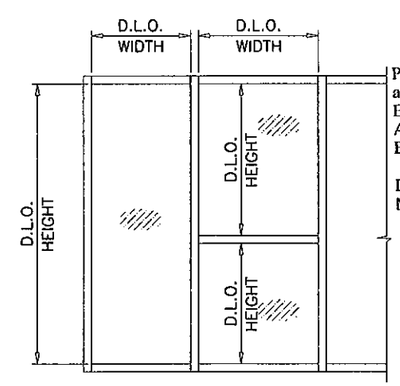

PRODUCT REVISED
as complying with the Florida Building Code
Acceptance No 12-0223.40
Expiration Date JUNE 22, 2016
By Manuel Perez
Miami Dade Product Control

Engr: JAVAD AHMAD
CIVIL
FLA. PE # 70592
C.A.N. 3538

FEB 15 2012

AL-FAROOQ CORPORATION
ENGINEERS & PRODUCT DEVELOPMENT
1235 S.W. 87 AVE
MIAMI, FLORIDA 33174
TEL. (305) 264-8100 FAX. (305) 262-6978
STORE\W05-31CTC

PRO-TECH 45SG ALUM WINDOW WALL SYSTEM (L.M.I.)
CRAWFORD TRACEY CORPORATION
3301 SW 13TH DRIVE
DEERFIELD BEACH, FL. 33442-8101
TEL. (954) 698-6888 FAX. (954) 698-6889

revisions:

no	date	by	description
A	02.27.08		INSUL. GLASS ADDED
B	11.29.10		GENERAL REVISION
C	03.21.11		REV. PER BNC COMMENTS
D	01.17.12		UPDATED TO 2010 FBC

date: 06-24-05
scale: 1/2" = 1"
dr. by: HAMID
chk. by:

drawing no.
W05-31

MULLION LOAD CAPACITY – PSF
WITHOUT INTERMEDIATE HORIZONTALS

NOMINAL DIMS.		WITHOUT REINF.	LIGHT REINF.	HEAVY REINF.
WIDTH (W)	FRAME HEIGHT	EXT. (+) INT. (–)	EXT. (+) INT. (–)	EXT. (+) INT. (–)
24"	78"	100.0	100.0	100.0
30"		100.0	100.0	100.0
36"		100.0	100.0	100.0
42"		100.0	100.0	100.0
48"		100.0	100.0	100.0
54"		100.0	100.0	100.0
60"		100.0	100.0	100.0
66"		100.0	100.0	100.0
72"		100.0	100.0	100.0
24"	84"	100.0	100.0	100.0
30"		100.0	100.0	100.0
36"		100.0	100.0	100.0
42"		100.0	100.0	100.0
48"		100.0	100.0	100.0
54"		94.9	100.0	100.0
60"		89.2	100.0	100.0
66"		85.2	100.0	100.0
24"	90"	100.0	100.0	100.0
30"		100.0	100.0	100.0
36"		100.0	100.0	100.0
42"		91.1	100.0	100.0
48"		82.0	100.0	100.0
54"		75.4	98.1	100.0
60"		70.4	91.3	100.0
24"	96"	100.0	100.0	100.0
30"		99.9	100.0	100.0
36"		84.8	100.0	100.0
42"		74.2	100.0	100.0
48"		66.6	93.1	100.0
54"		60.9	84.8	100.0
60"		56.7	78.5	100.0
24"	102"	100.0	100.0	100.0
30"		82.9	100.0	100.0
36"		70.2	100.0	100.0
42"		61.3	91.6	100.0
48"		54.8	81.7	100.0
54"		50.0	74.1	100.0
24"	108"	86.1	100.0	100.0
30"		69.6	100.0	100.0
36"		58.8	93.5	100.0
42"		51.2	81.2	100.0
48"		45.7	72.2	99.9
24"	114"	73.0	100.0	100.0
30"		59.0	93.8	100.0
36"		49.8	79.1	100.0
42"		43.3	68.8	100.0
48"		38.5	61.3	89.0
24"	120"	62.5	99.4	100.0
30"		50.4	80.2	100.0
36"		42.5	67.6	100.0
42"		36.9	58.7	90.1
48"		32.8	52.2	79.9

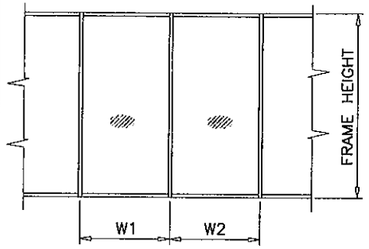

$$\text{WIDTH (W)} = \frac{W1 + W2}{2}$$

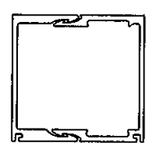

WITHOUT REINFORCING

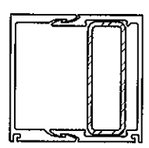

LIGHT REINFORCING

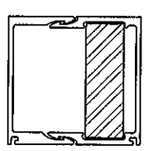

HEAVY REINFORCING

MULLION LOAD CAPACITY – PSF
WITH INTERMEDIATE HORIZONTALS OR MULLION WITH DOORS

NOMINAL DIMS.		WITHOUT REINF.	LIGHT REINF.	HEAVY REINF.
WIDTH (W)	FRAME HEIGHT	EXT. (+) INT. (–)	EXT. (+) INT. (–)	EXT. (+) INT. (–)
24"	78"	100.0	100.0	100.0
30"		100.0	100.0	100.0
36"		100.0	100.0	100.0
42"		100.0	100.0	100.0
48"		100.0	100.0	100.0
54"		99.7	100.0	100.0
60"		89.8	100.0	100.0
66"		81.6	94.2	100.0
72"		74.8	86.4	100.0
24"	84"	100.0	100.0	100.0
30"		100.0	100.0	100.0
36"		100.0	100.0	100.0
42"		100.0	100.0	100.0
48"		89.8	100.0	100.0
54"		79.9	99.3	100.0
60"		71.9	89.4	100.0
66"		65.3	81.3	100.0
24"	90"	100.0	100.0	100.0
30"		100.0	100.0	100.0
36"		97.4	100.0	100.0
42"		83.5	100.0	100.0
48"		73.0	97.3	100.0
54"		64.9	86.5	100.0
60"		58.4	77.9	100.0
24"	96"	100.0	100.0	100.0
30"		96.3	100.0	100.0
36"		80.2	100.0	100.0
42"		68.8	97.8	100.0
48"		60.2	85.5	100.0
54"		53.5	76.0	100.0
60"		48.1	68.4	94.7
24"	102"	100.0	100.0	100.0
30"		80.3	100.0	100.0
36"		66.9	100.0	100.0
42"		57.3	86.6	100.0
48"		50.2	75.8	100.0
54"		44.6	67.4	93.2
24"	108"	84.5	100.0	100.0
30"		67.6	100.0	100.0
36"		56.4	89.6	100.0
42"		48.3	76.8	100.0
48"		42.3	67.2	93.5
24"	114"	71.9	100.0	100.0
30"		57.5	91.4	100.0
36"		47.9	76.2	100.0
42"		41.1	65.3	95.9
48"		35.9	57.2	83.9
24"	120"	61.6	98.0	100.0
30"		49.3	78.4	100.0
36"		41.1	65.3	100.0
42"		35.2	56.0	86.6
48"		30.8	49.0	75.7

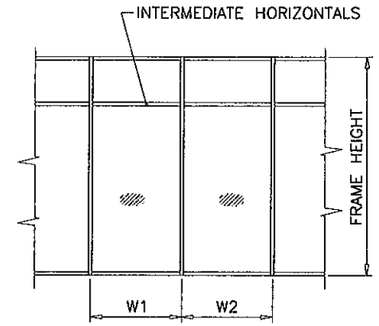

$$\text{WIDTH (W)} = \frac{W1 + W2}{2}$$

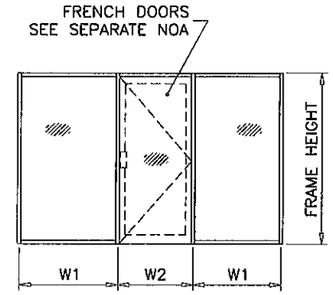

$$\text{WIDTH (W)} = \frac{W1 + W2}{2}$$

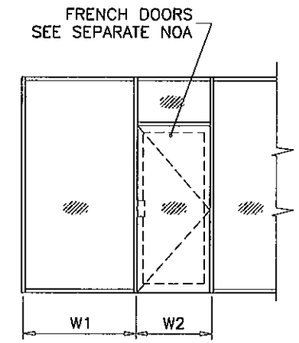

$$\text{WIDTH (W)} = \frac{W1 + W2}{2}$$

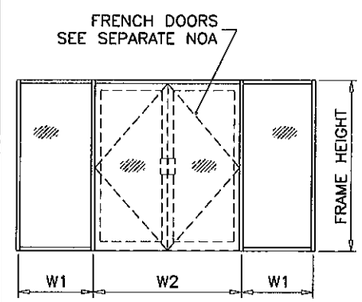

$$\text{WIDTH (W)} = \frac{W1}{2} + \frac{W2}{4}$$

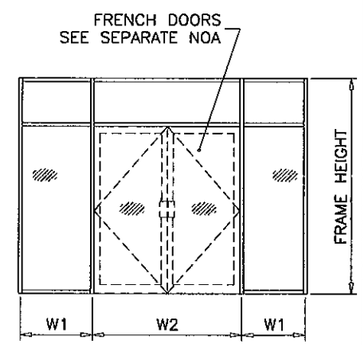

$$\text{WIDTH (W)} = \frac{W1 + W2}{2}$$

Engr. JAVAD AHMAD
CIVIL
FLA. PE # 70592
C.A.N. 3538

FEB 15 2012

PRODUCT REVISED
as complying with the Florida
Building Code
Acceptance No 12-0223.40
Expiration Date JUNE 22, 2016
By Manuel Perez
Miami-Dade Product Control

AL-FAROOQ CORPORATION
ENGINEERS & PRODUCT DEVELOPMENT
1235 S.W. 87 AVE
MIAMI, FLORIDA 33174
TEL. (305) 264-8100 FAX. (305) 262-6978
STORE\W05-31CTC

PRO-TECH 45SG ALUM WINDOW WALL SYSTEM (L.M.I.)

CRAWFORD TRACEY CORPORATION
3301 SW 13TH DRIVE
DEERFIELD BEACH, FL. 33442-8101
TEL. (954) 698-6888 FAX. (954) 698-6889

revisions:

no	date	by	description
A	02.27.08		NO CHANGE THIS SHEET
B	11.29.10		NO CHANGE THIS SHEET
C	03.21.11		NO CHANGE THIS SHEET
D	01.17.12		NO CHANGE THIS SHEET

date: 06-24-05
scale:
dr. by: HAMID
chk. by:

drawing no.
W05-31

ANCHOR LOAD CAPACITY – PSF
EXT.(+) & INT.(–)

NOMINAL DIMS.		ANCHORS TYPE 'A'		ANCHORS TYPE 'B'		ANCHORS TYPE 'C'
WIDTH (W)	FRAME HEIGHT	A2	A3	B1	B2	C1
24"	78"	100.0	100.0	100.0	100.0	100.0
30"		100.0	100.0	100.0	100.0	100.0
36"		100.0	100.0	100.0	100.0	100.0
42"		100.0	100.0	100.0	100.0	100.0
48"		100.0	100.0	100.0	100.0	100.0
54"		100.0	100.0	98.5	100.0	100.0
60"		100.0	100.0	100.0	100.0	100.0
66"		95.6	100.0	100.0	100.0	100.0
72"		100.0	100.0	100.0	100.0	100.0
24"	84"	100.0	100.0	100.0	100.0	100.0
30"		100.0	100.0	100.0	100.0	100.0
36"		100.0	100.0	100.0	100.0	100.0
42"		100.0	100.0	100.0	100.0	100.0
48"		100.0	100.0	100.0	100.0	100.0
54"		93.0	100.0	91.4	100.0	100.0
60"		97.6	100.0	100.0	100.0	100.0
66"		88.7	100.0	93.5	100.0	100.0
24"	90"	100.0	100.0	96.0	100.0	100.0
30"		100.0	100.0	100.0	100.0	100.0
36"		100.0	100.0	96.0	100.0	100.0
42"		100.0	100.0	100.0	100.0	100.0
48"		97.6	100.0	96.0	100.0	100.0
54"		86.8	100.0	85.3	100.0	100.0
60"		91.1	100.0	96.0	100.0	100.0
24"	96"	100.0	100.0	90.0	100.0	100.0
30"		100.0	100.0	100.0	100.0	100.0
36"		100.0	100.0	90.0	100.0	100.0
42"		100.0	100.0	100.0	100.0	100.0
48"		91.5	100.0	90.0	100.0	100.0
54"		81.3	100.0	80.0	100.0	100.0
60"		85.4	100.0	90.0	100.0	100.0
24"	102"	100.0	100.0	84.7	100.0	100.0
30"		100.0	100.0	100.0	100.0	100.0
36"		95.7	100.0	84.7	100.0	100.0
42"		98.4	100.0	96.8	100.0	100.0
48"		86.1	100.0	84.7	100.0	100.0
54"		76.5	100.0	75.3	100.0	100.0
24"	108"	100.0	100.0	80.0	100.0	100.0
30"		100.0	100.0	96.0	100.0	100.0
36"		90.4	100.0	80.0	100.0	100.0
42"		93.0	100.0	91.4	100.0	100.0
48"		81.3	100.0	80.0	100.0	100.0
24"	114"	100.0	100.0	75.8	100.0	100.0
30"		100.0	100.0	90.9	100.0	100.0
36"		85.6	100.0	75.8	100.0	100.0
42"		88.1	100.0	86.6	100.0	100.0
48"		77.1	100.0	75.8	100.0	100.0
24"	120"	97.6	100.0	72.0	100.0	100.0
30"		97.6	100.0	86.4	100.0	100.0
36"		81.3	100.0	72.0	100.0	100.0
42"		83.7	100.0	82.3	100.0	100.0
48"		73.2	97.6	72.0	100.0	100.0

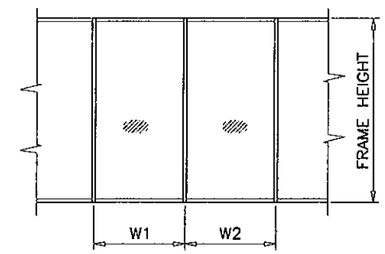

$$\text{WIDTH (W)} = \frac{W1 + W2}{2}$$

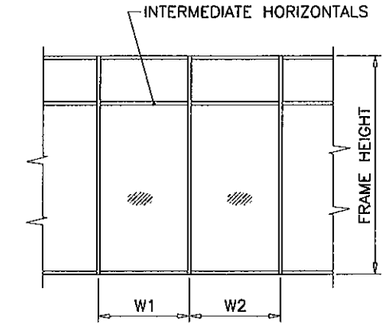

$$\text{WIDTH (W)} = \frac{W1 + W2}{2}$$

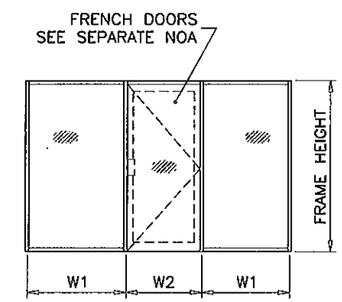

$$\text{WIDTH (W)} = \frac{W1 + W2}{2}$$

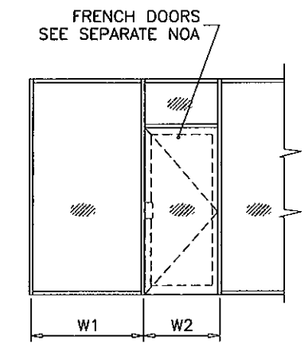

$$\text{WIDTH (W)} = \frac{W1 + W2}{2}$$

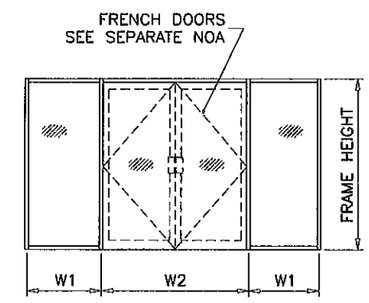

$$\text{WIDTH (W)} = \frac{W1}{2} + \frac{W2}{4}$$

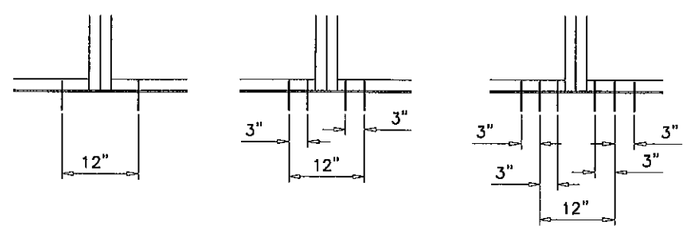

B1, C1 A2, B2 A3

ANCHORS TYPES: SEE SHEET 5 FOR DESCRIPTION

A2 = (2) ANCHORS TYPE 'A' AT EACH SIDE OF MULLION
A3 = (3) ANCHORS TYPE 'A' AT EACH SIDE OF MULLION

B1 = (1) ANCHOR TYPE 'B' AT EACH SIDE OF MULLION
B2 = (2) ANCHORS TYPE 'B' AT EACH SIDE OF MULLION

C1 = (1) ANCHOR TYPE 'C' AT EACH SIDE OF MULLION

ALL OTHER ANCHORS TO BE SPACED AS PER ELEVATION.

Engr: JAVAD AHMAD
CIVIL
FLA. PE # 70592
C.A.N. 3538
FEB 13 2012

PRODUCT REVISED
es complying with the Florida
Building Code
Acceptance No 12-0223.40
Expiration Date JUNE 22, 2016
By Manuel Cruz
Miami-Dade Product Control

AL-FAROOQ CORPORATION
ENGINEERS & PRODUCT DEVELOPMENT
1235 S.W. 87 AVE
MIAMI, FLORIDA 33174
TEL. (305) 264-8100 FAX. (305) 262-6978
STORE\W05-31CTC

PRO-TECH 45SG ALUM WINDOW WALL SYSTEM (L.M.I.)

CRAWFORD TRACEY CORPORATION
3301 SW 13TH DRIVE
DEERFIELD BEACH, FL. 33442-8101
TEL. (954) 698-6888 FAX. (954) 698-6889

revisions:

no	date	by	description
A	02.27.08		NO CHANGE THIS SHEET
B	11.29.10		GENERAL REVISION
C	03.21.11		NO CHANGE THIS SHEET
D	01.17.12		NO CHANGE THIS SHEET

date: 06-24-05
scale: 1/2" = 1"
dr. by: HAMID
chk. by:

drawing no.
W05-31

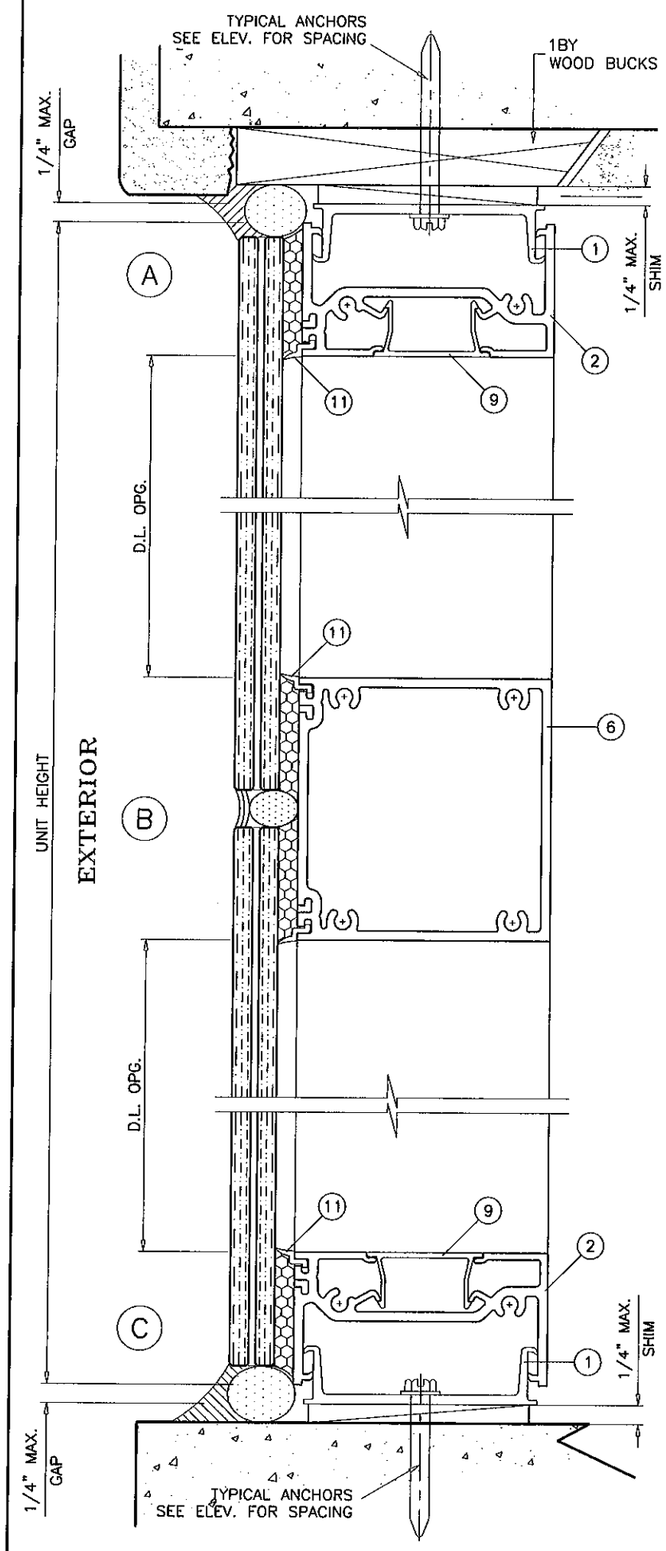

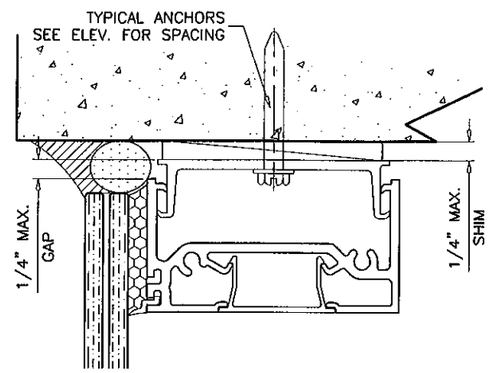

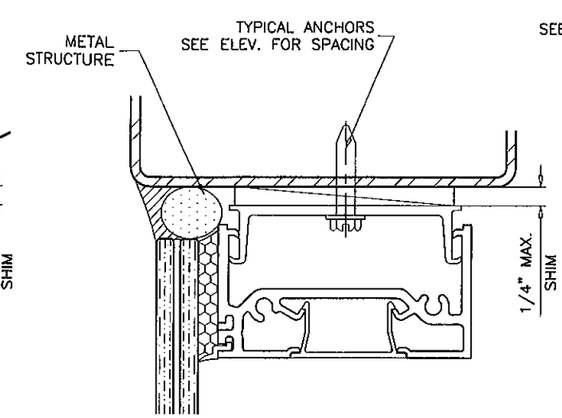

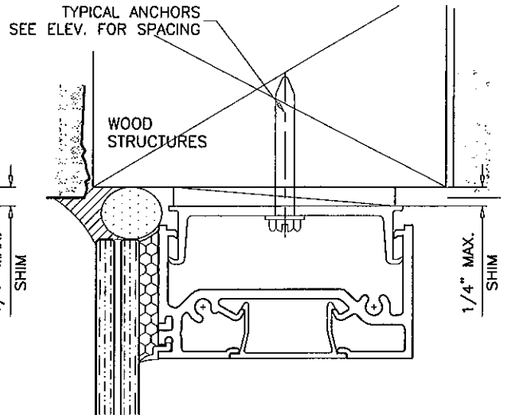

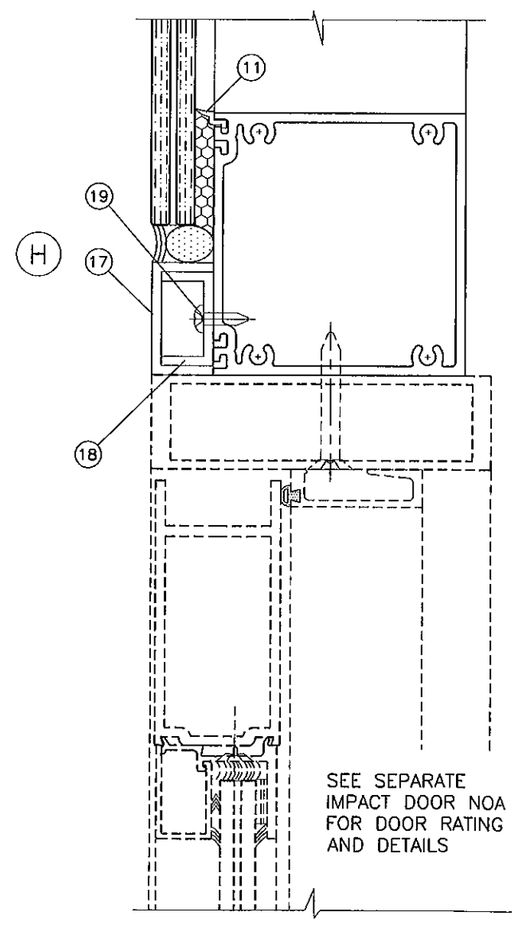

WOOD BUCKS AND METAL STRUCTURES NOT BY CRAWFORD TRACEY MUST SUPPORT LOADS IMPOSED BY GLAZING SYSTEM AND TRANSFER THEM TO THE BUILDING STRUCTURE.

TYPICAL ANCHORS: SEE ELEV. FOR SPACING

TYPE 'A'– 1/4" DIA. ULTRACON BY 'ELCO' (Fu=177 KSI, Fy=155 KSI)
INTO 2BY WOOD BUCKS OR WOOD STRUCTURES
1–3/8" MIN. PENETRATION INTO WOOD

THRU 1BY BUCKS INTO CONC. OR MASONRY
1–1/4" MIN. EMBED INTO CONC. OR MASONRY

TYPE 'B'– 1/4" DIA. ULTRACON BY 'ELCO' (Fu=177 KSI, Fy=155 KSI)
DIRECTLY INTO CONC. OR MASONRY
1–1/4" MIN. EMBED INTO CONC. OR MASONRY

TYPE 'C'– 1/4" DIA. TEKS OR SELF DRILLING SCREWS (GRADE 5 CRS)
INTO METAL STRUCTURES
STEEL : 1/8". MIN. (Fy = 36 KSI MIN.)
ALUMINUM : 1/8" THK. MIN. (6063–T5 MIN.)
(STEEL IN CONTACT WITH ALUMINUM TO BE PLATED OR PAINTED)

TYPICAL EDGE DISTANCE

INTO CONCRETE AND MASONRY = 2–1/2" MIN.
INTO WOOD STRUCTURE = 1" MIN.
INTO METAL STRUCTURE = 3/4" MIN.

CONCRETE AT HEAD, SILL OR JAMBS f'c = 3000 PSI MIN.
C–90 HOLLOW/FILLED BLOCK AT JAMBS f'm = 2000 PSI MIN.

SEALANTS:

ALL FRAME JOINTS ON EXTERIOR TO BE SEALED WITH DOW CORNING 795 SILICONE SEALANT.

Engr: JAVAD AHMAD
CIVIL
FLA. PE # 70592
C.A.N. 3538

FEB 15 2012

PRODUCT REVISED
as complying with the Florida Building Code
Acceptance No 12-0223.40
Expiration Date JUNE 22, 2016
Miami Dade Product Control

AL-FAROOQ CORPORATION
ENGINEERS & PRODUCT DEVELOPMENT
1235 S.W. 87 AVE
MIAMI, FLORIDA 33174
TEL. (305) 264-8100 FAX. (305) 262-6978

STORE\W05-31CTC

PRO-TECH 45SG ALUM WINDOW WALL SYSTEM (L.M.I.)

CRAWFORD TRACEY CORPORATION
3301 SW 13TH DRIVE
DEERFIELD BEACH, FL. 33442-8101
TEL. (954) 698-6889 FAX. (954) 698-6888

revisions:

no	date	by	description
A	02.27.08		NO CHANGE THIS SHEET
B	11.29.10		GENERAL REVISION
C	03.21.11		REV. PER BNC COMMENTS
D	01.17.12		NO CHANGE THIS SHEET

date: 06–24–05
scale: 1/2" = 1"
dr. by: HAMID
chk. by:

drawing no.
W05–31

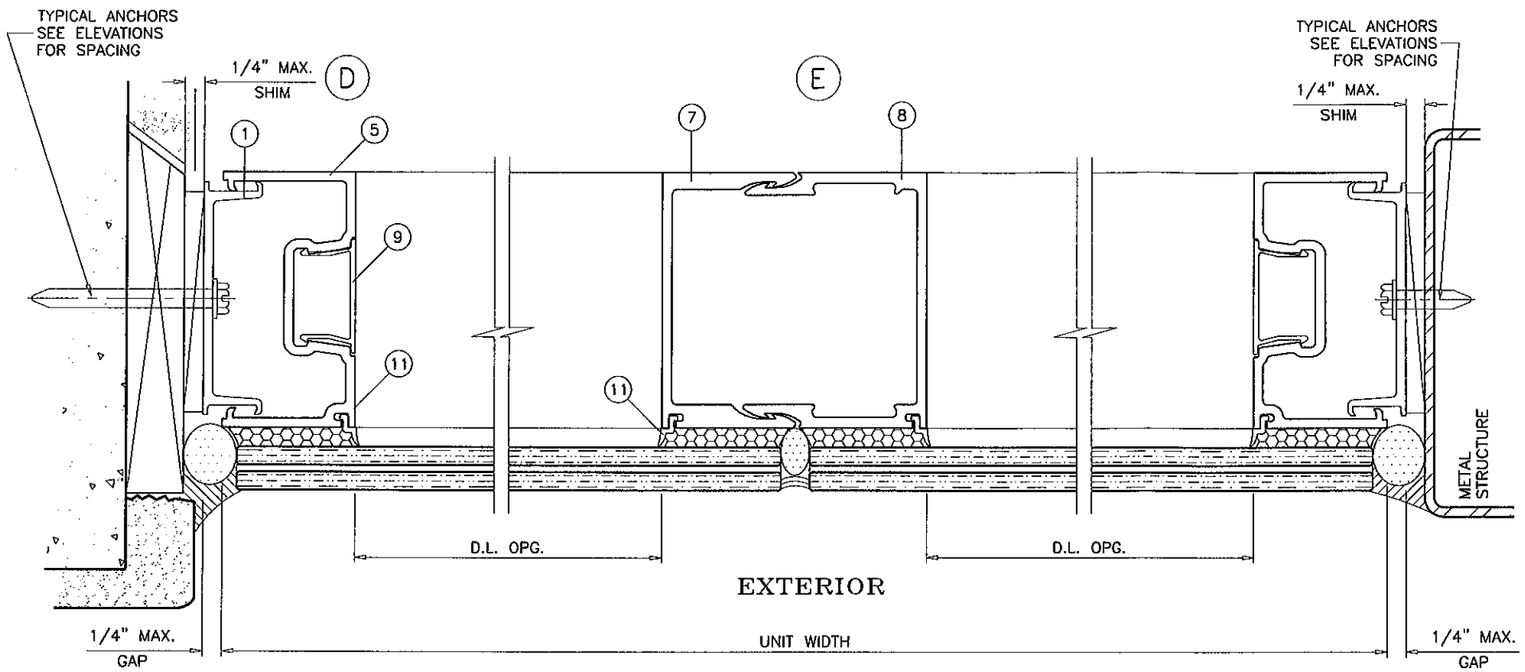

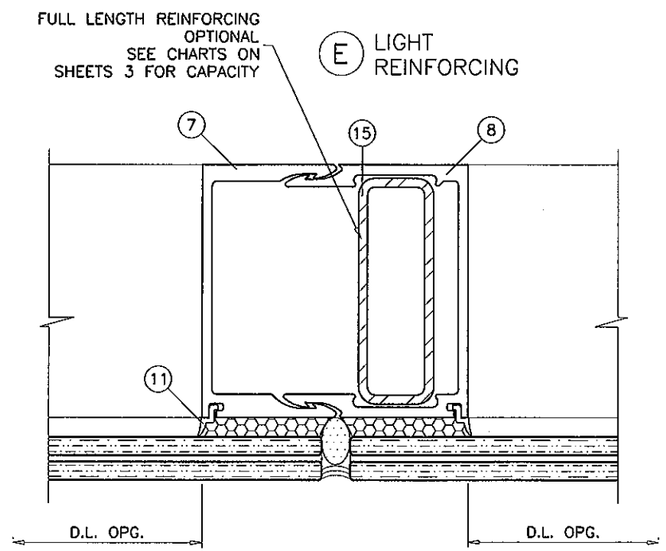

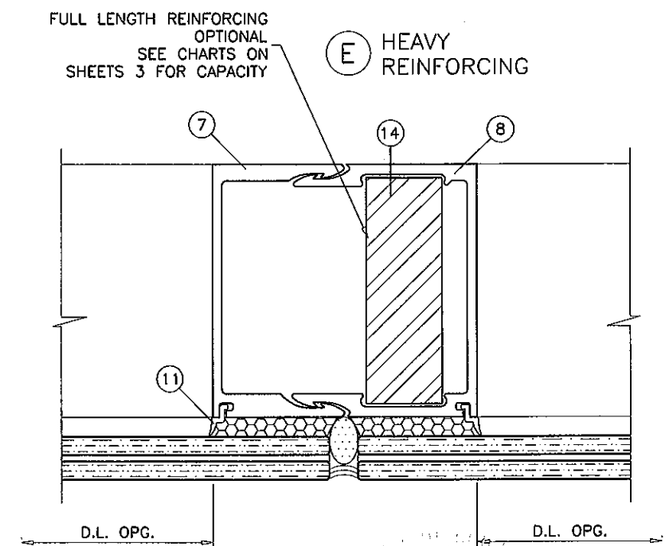

Engr: JAVAD AHMADI
CIVIL
FLA. PE # 70592
C.A.N. 3538

FEB 15 2012

PRODUCT REVISED
as complying with the Florida
Building Code
Acceptance No 12-0223.40
Expiration Date JUNE 22, 2016
By Manuel Perez
Miami-Dade Product Control

AL-FAROOQ CORPORATION
ENGINEERS & PRODUCT DEVELOPMENT
1235 S.W. 87 AVE
MIAMI, FLORIDA 33174
TEL. (305) 264-8100 FAX. (305) 262-6978
STORE\W05-31CTC

PRO-TECH 455G ALUM WINDOW WALL SYSTEM (L.M.I.)

CRAWFORD TRACEY CORPORATION
3301 SW 13TH DRIVE
DEERFIELD BEACH, FL. 33442-8101
TEL. (954) 698-6888 FAX. (954) 698-6889

revisions:

no	date	by	description
A	02.27.08		NO CHANGE THIS SHEET
B	11.29.10		NO CHANGE THIS SHEET
C	03.21.11		NO CHANGE THIS SHEET
D	01.17.12		NO CHANGE THIS SHEET

date: 06-24-05
scale: 1/2" = 1"
dr. by: HAMID
chk. by:

drawing no.
W05-31

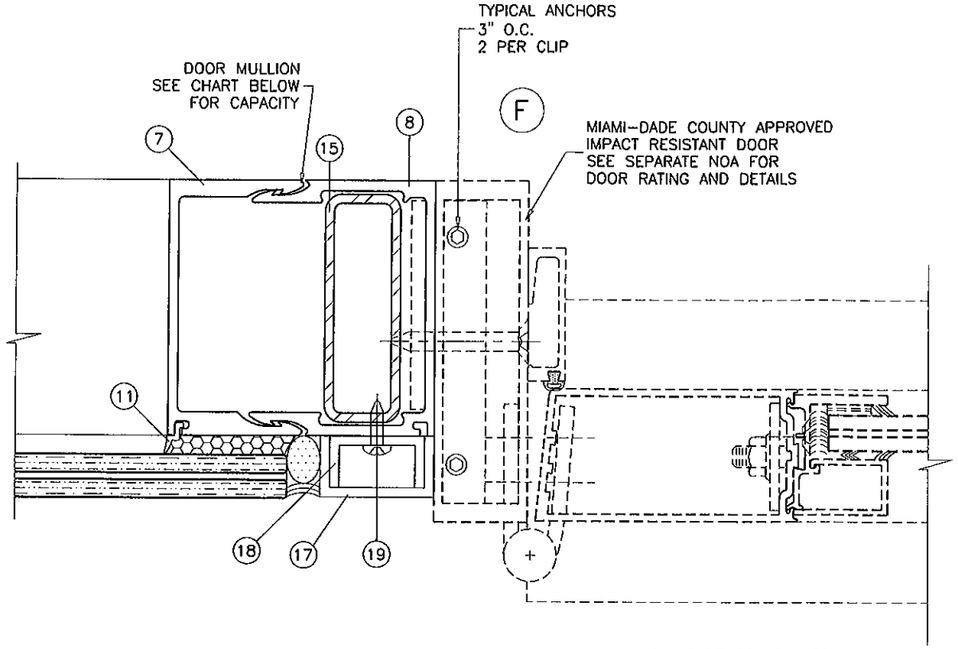

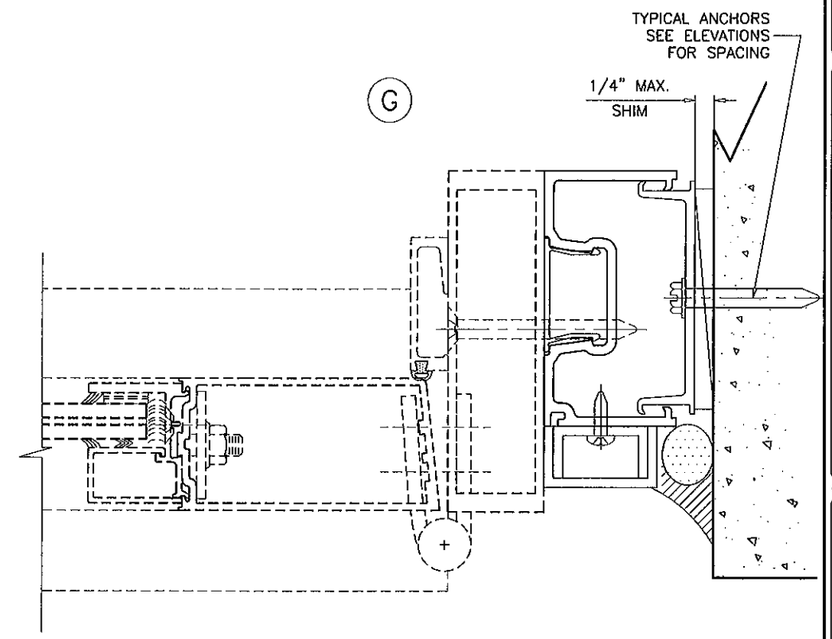

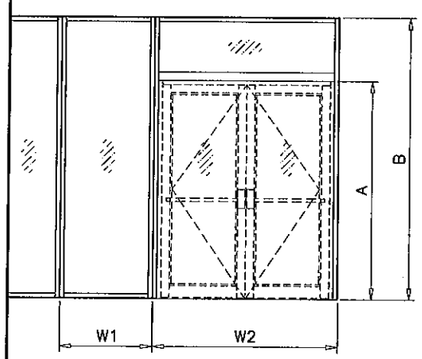

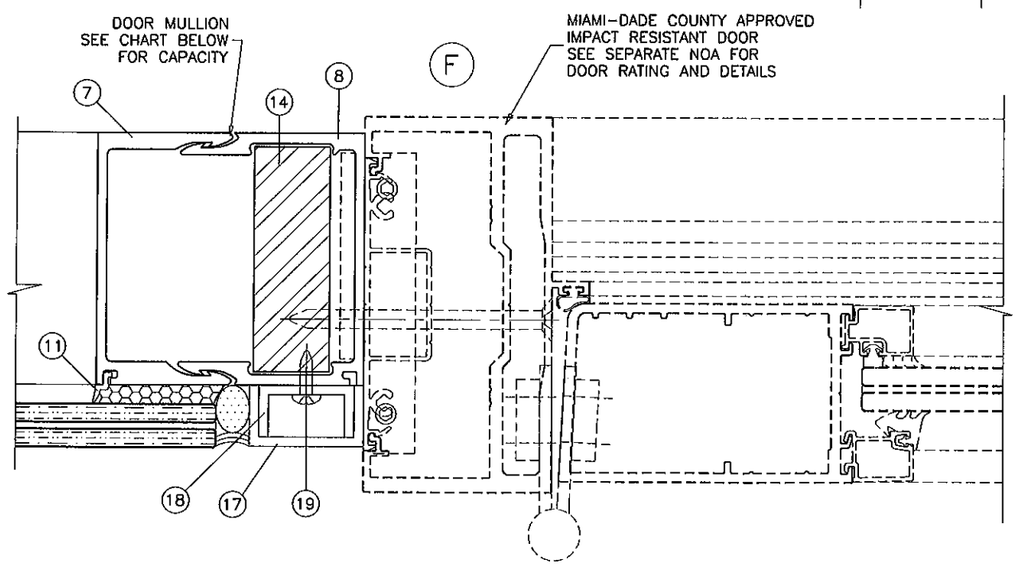

DOOR MULLION DESIGN LOAD CAPACITY - PSF				
FRAME HEIGHT-B INCHES MAX.	DOOR HEIGHT-A INCHES MAX.	WIDTH-W1 INCHES MAX.	WIDTH-W2 INCHES MAX.	EXT. (+) INT. (-)
120	96	36	72	70.1
	90			66.1
	84			62.0
	80			59.4
114	96	42	72	80.0
	90			68.5
108	96	48	72	80.0
	90			80.0
102	96	54	72	80.0
	90			80.0

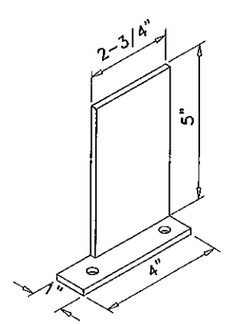

DOOR MULLION INSTALLATION CLIP
1 X 5 X 3/16" ALUM ANGLE

Engr: JAVAD AHMAD
CIVIL
FLA. PE # 70592
C.A.N. 3538

FEB 15 2012

PRODUCT REVISED
as complying with the Florida
Building Code
Acceptance No 12-0223.40
Expiration Date JUNE 22, 2016
By Manuel Feliz
Miami Dade Product Control

AL-FAROOQ CORPORATION
ENGINEERS & PRODUCT DEVELOPMENT
1235 S.W. 87 AVE
MIAMI, FLORIDA 33174
TEL (305) 264-8100 FAX. (305) 262-6978

STORE\W05-31CTC

PRO-TECH 45SG ALUM WINDOW WALL SYSTEM (L.M.I.)

CRAWFORD TRACEY CORPORATION
3301 SW 13TH DRIVE
DEERFIELD BEACH, FL. 33442-8101
TEL. (954) 698-6888 FAX. (954) 698-6889

revisions:

no	date	by	description
A	02.27.08		NO CHANGE THIS SHEET
B	11.29.10		NO CHANGE THIS SHEET
C	03.21.11		NO CHANGE THIS SHEET
D	01.17.12		NO CHANGE THIS SHEET

date: 06-24-05
scale: 1/2" = 1"
dr. by: HAMID
chk. by:

drawing no.
W05-31

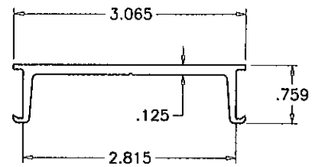

(1) SUB BUCK

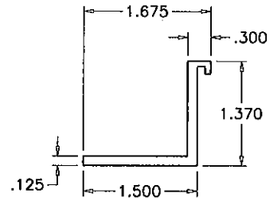

SETTING PIECE
(10) INSUL. LAM. GLASS

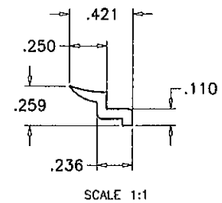

(11) INT. GLAZING SPACER

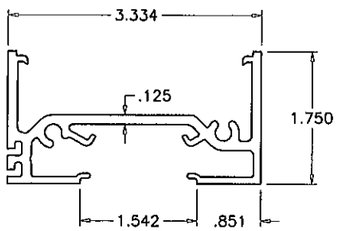

(2) FRAME HEAD/SILL

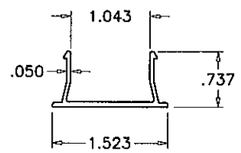

(9) SNAP-IN COVER

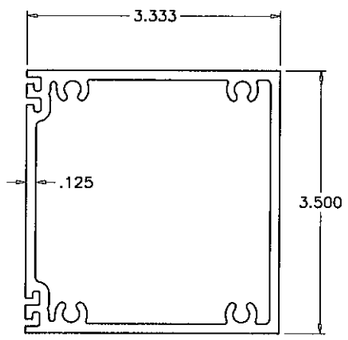

(6) FRAME HORIZONTAL

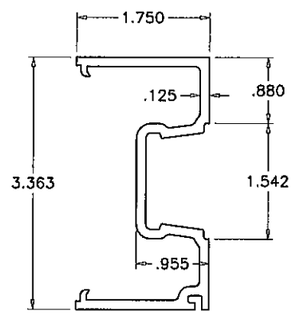

(5) FRAME JAMB

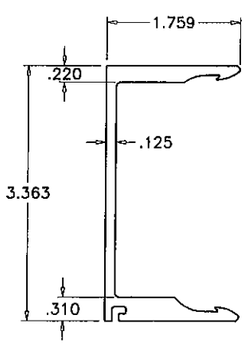

(7) FEMALE MULLION

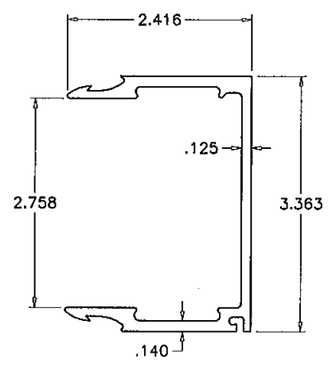

(8) MALE MULLION

ITEM NO.	PART NUMBER	QUANTITY	DESCRIPTION	MATERIAL	MANF./SUPPLIER/REMARKS
1	B44B001	AS REQD.	SUB BUCK	6105-T5/6005A-T61	-
2	144P176	AS REQD.	FRAME HEAD/SILL	6063-T6/6005A-T61	-
5	144J176	AS REQD.	FRAME JAMB	6063-T6/6005A-T61	-
6	144H342	AS REQD.	HORIZONTAL	6063-T6/6005A-T61	-
7	144M114	AS REQD.	FEMALE MULLION	6063-T6/6005A-T61	-
8	144M113	AS REQD.	MALE MULLION	6063-T6/6005A-T61	-
9	T44U119	AS REQD.	SNAP-IN COVER	6063-T6/6005A-T61	-
10	170-116	AS REQD.	4" LONG SETTING PIECE (INSUL. LAM. GLASS)	6005A-T61	AT 1/4 POINTS
11	#0932	AS REQD.	INTERIOR GLAZING SPACER	POLYPROPYLENE	DUROMETER ±100 SHORE A
12	-	2/ LITE	SETTING BLOCK (1/8" X 1-3/16" X 4" LONG)	EPDM	DUROMETER ±75 SHORE A
13	983	-	GLAZING COMPOUND	SILICONE	DOW CORNING
14	-	AS REQD.	STEEL BAR, FULL LENGTH	A36 STEEL	1" X 3"
15	-	AS REQD.	REINFORCING TUBE, FULL LENGTH	A36 STEEL	1 X 3 X 11 GA.
16	#14 X 1-1/4"	AS REQD.	FRAME ASSEMBLY SCREWS	ST. STEEL	P.H. SMS
17	-	AS REQD.	FILLER CHANNEL	6063-T6/6005A-T61	13/16 X 1-1/2 X 13/16 X 1/8"
18	-	AS REQD.	FILLER CHANNEL	6063-T6/6005A-T61	11/16 X 1-1/4 X 11/16 X 1/8"
19	#10 X 1"	AS REQD.	FILLER CHANNEL SCREWS	ST. STEEL	AT 14" O.C.

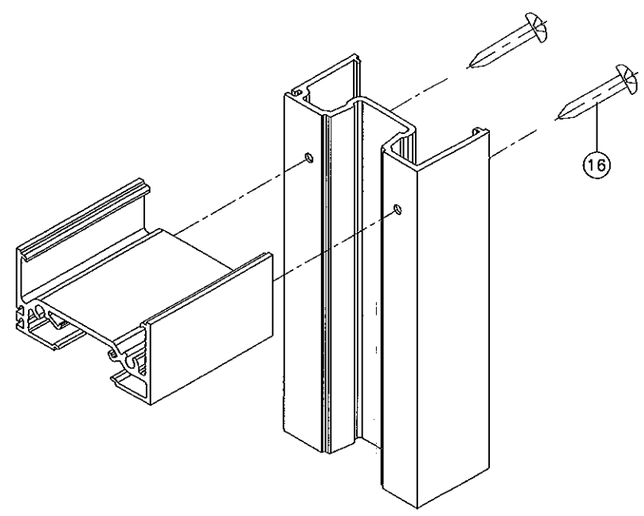

FRAME TOP/BOTTOM CORNER

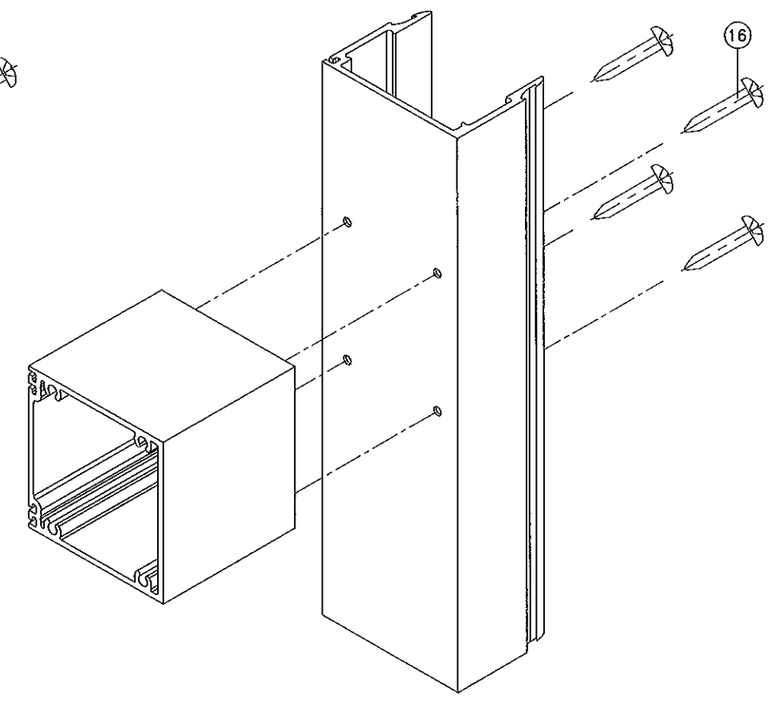

FRAME HORIZONTAL CORNER

Engr: JAVAD AHMAD
CIVIL
FLA. PE # 70592
C.A.N. 3538

FEB 15 2012

PRODUCT REVISED
as complying with the Florida
Building Code
Acceptance No 12-0223.40
Expiration Date JUNE 22, 2016
Miami Dade Product Control

AL-FAROOQ CORPORATION
ENGINEERS & PRODUCT DEVELOPMENT
1235 S.W. 87 AVE
MIAMI, FLORIDA 33174
TEL (305) 264-8100 FAX. (305) 262-6978

STORE\W05-31CTC

PRO-TECH 45SG ALUM WINDOW WALL SYSTEM (L.M.I.)

CRAWFORD TRACEY CORPORATION
3301 SW 13TH DRIVE
DEERFIELD BEACH, FL. 33442-8101
TEL. (954) 698-6888 FAX. (954) 698-6889

revisions:

no	date	by	description
A	02.27.08		SETTING PIECE ADDED
B	11.29.10		NO CHANGE THIS SHEET
C	03.21.11		REV. PER BNC COMMENTS
D	01.17.12		UPDATED TO 2010 FBC

date: 06-24-05
scale: 1/2" = 1"
dr. by: HAMID
chk. by:

drawing no.
W05-31

sheet 8 of 8