MIAMI-DADE COUNTY
DEPARTMENT OF PERMITTING, ENVIRONMENT, AND REGULATORY AFFAIRS (PERA)
BOARD AND CODE ADMINISTRATION DIVISION

MIAMI-DADE COUNTY, FLORIDA
PRODUCT CONTROL SECTION
11805 SW 26 Street, Room 208
Miami, Florida 33175-2474
T (786) 315-2590 F (786) 315-2599
www.miamidade.gov/pera/

NOTICE OF ACCEPTANCE (NOA)

ES Windows, LLC
10653 N.E. Quaybridge Ct.
Miami, FL 33138

SCOPE:

This NOA is being issued under the applicable rules and regulations governing the use of construction materials. The documentation submitted has been reviewed and accepted by Miami-Dade County PERA-Product Control Section to be used in Miami-Dade County and other areas where allowed by the Authority Having Jurisdiction (AHJ).

This NOA shall not be valid after the expiration date stated below. The Miami-Dade County Product Control Section (In Miami-Dade County) and/or the AHJ (in areas other than Miami-Dade County) reserve the right to have this product or material tested for quality assurance purposes. If this product or material fails to perform in the accepted manner, the manufacturer will incur the expense of such testing and the AHJ may immediately revoke, modify, or suspend the use of such product or material within their jurisdiction. PERA reserves the right to revoke this acceptance, if it is determined by Miami-Dade County Product Control Section that this product or material fails to meet the requirements of the applicable building code.

This product is approved as described herein, and has been designed to comply with the Florida Building Code, including the High Velocity Hurricane Zone.

DESCRIPTION: Series "1500 Aluminum Fixed Window – L. M. I.

APPROVAL DOCUMENT: Drawing No. **W03-57**, titled "Series-1500 Aluminum Fixed Window (L.M.I.)", sheets 1 through 7 of 7, prepared by Al-Farooq Corporations, dated 07/31/03 with revision "**E**" dated 12/09/11, signed and sealed by Javad Ahmad, P. E., bearing the Miami-Dade County Product Control Revision stamp with the Notice of Acceptance number and Expiration date by the Miami-Dade County Product Control Section.

MISSILE IMPACT RATING: Large and Small Missile Impact Resistant.

LABELING: Each unit shall bear a permanent label with the manufacturer's name or logo, city, state, model/ series and following statement: "Miami-Dade County Product Control Approved" unless otherwise noted herein.

RENEWAL of this NOA shall be considered after a renewal application has been filed and there has been no change in the applicable building code negatively affecting the performance of this product.

TERMINATION of this NOA will occur after the expiration date or if there has been a revision or change in the materials, use, and/or manufacture of the product or process. Misuse of this NOA as an endorsement of any product, for sales, advertising or any other purposes shall automatically terminate this NOA. Failure to comply with any section of this NOA shall be cause for termination and removal of NOA.

ADVERTISEMENT: The NOA number preceded by the words Miami-Dade County, Florida, and followed by the expiration date may be displayed in advertising literature. If any portion of the NOA is displayed, then it shall be done in its entirety.

INSPECTION: A copy of this entire NOA shall be provided to the user by the manufacturer or its distributors and shall be available for inspection at the job site at the request of the Building Official.

This NOA **renews NOA No. 08-0417.06** and consists of this page 1, evidence pages E-1 and E-2, as well as approval document mentioned above.

The submitted documentation was reviewed by **Jaime D. Gascon, P. E.**

MIAMI-DADE COUNTY APPROVED

J. Gascon 5/9/12

NOTICE OF ACCEPTANCE: EVIDENCE SUBMITTED

A. DRAWINGS

1. Manufacturer's die drawings and sections.
   (Submitted under previous NOA's No.'s 08–0417.06, 06–0308.05 and 03–0910.01)
2. Drawing No. **W03–57**, titled "Series–1500 Aluminum Fixed Window (L.M.I.)", sheets 1 through 7 of 7, prepared by Al–Farooq Corporations, dated 07/31/03 with revision "**E**" dated 12/09/11, signed and sealed by Javad Ahmad, P. E.

B. TESTS

1. Test reports on: 1) Air Infiltration Test, per FBC, TAS 202–94
   2) Uniform Static Air Pressure Test, Loading per FBC TAS 202–94
   3) Large Missile Impact Test per FBC, TAS 201–94
   4) Cyclic Wind Pressure Loading per FBC, TAS 203–94

   along with marked–up drawings and installation diagram of an Aluminum fixed window, prepared by Fenestration Testing Laboratory, Inc., Test Report No. **FTL–5339**, dated 02/11/08, signed and sealed by Michael R. Wenzel, P. E.
   (Submitted under previous NOA No. 08–0417.06)
2. Test reports on: 1) Air Infiltration Test, per FBC, TAS 202–94
   2) Uniform Static Air Pressure Test, Loading per FBC TAS 202–94
   3) Water Resistance Test, per FBC, TAS 202–94
   4) Large Missile Impact Test per FBC, TAS 201–94
   5) Cyclic Wind Pressure Loading per FBC, TAS 203–94

   along with marked–up drawings and installation diagram of an Aluminum fixed window, prepared by Fenestration Testing Laboratory, Inc., Test Report No. **FTL–5054**, dated 10/03/06, signed and sealed by Edmundo Largaespada, P. E.
   (Submitted under previous NOA No. 06–0308.05)
3. Test reports on: 1) Air Infiltration Test, per FBC, TAS 202–94
   2) Uniform Static Air Pressure Test, Loading per FBC TAS 202–94
   3) Water Resistance Test, per FBC, TAS 202–94
   4) Large Missile Impact Test per FBC, TAS 201–94
   5) Cyclic Wind Pressure Loading per FBC, TAS 203–94

   along with marked–up drawings and installation diagram of an Aluminum fixed window, prepared by Fenestration Testing Laboratory, Inc., Test Reports No.'s **FTL–3810**, **FTL–3819** and **FTL–3808**, dated 05/16/03, 06/09/03 and 05/14/03, all signed and sealed by Joseph C. Chan, P. E.
   (Submitted under previous NOA No. 03–0910.01)

C. CALCULATIONS

1. Anchor verification calculations and structural analysis, complying with **FBC–2010**, prepared by Al–Farooq Corporation, dated 12/12/11, signed and sealed by Javad Ahmad, P. E.
2. **Glazing complies with ASTM E1300–04**

Jaime D. Gascon, P. E.
Product Control Section Supervisor
NOA No. 12–0223.41
Expiration Date: November 06, 2013
Approval Date: May 17, 2012

NOTICE OF ACCEPTANCE: EVIDENCE SUBMITTED

D. QUALITY ASSURANCE

1. Miami–Dade Department of Permitting, Environment, and Regulatory Affairs (PERA).

E. MATERIAL CERTIFICATIONS

1. Notice of Acceptance No. **11–0624.02** issued to E.I. DuPont DeNemours & Co., Inc. for their "**DuPont Sentry Glass® Interlayer**" dated 05/26/2010, expiring on 01/14/17.
2. Notice of Acceptance No. **11–0624.01** issued to E.I. DuPont DeNemours & Co., Inc. for their "**DuPont Butacite® PVB Interlayer**" dated 09/08/2011, expiring on 12/11/2016.

F. STATEMENTS

1. Statement letter of no financial interest, conformance and compliance with the **FBC–2010**, dated 12/08/11, signed and sealed by Javad Ahmad, P. E.
2. Laboratory compliance letter for Test Report No. **FTL–6236**, issued by Fenestration Testing Laboratory, Inc., dated 06/15/10, signed and sealed by Jorge A. Causo, P. E.
3. Proposal No. **09–1583** issued by Product Control, dated 11/23/09, signed by Jaime D. Gascon, P. E.
4. Laboratory compliance letter for Test Report No. **FTL–5339**, issued by Fenestration Testing Laboratory, Inc., dated 02/11/08, signed and sealed by Michael R. Wenzel, P. E.
   (Submitted under previous NOA No.08–0417.06)
5. Laboratory compliance letter for Test Report No. **FTL–5054**, issued by Fenestration Testing Laboratory, Inc., dated 10/03/06, signed and sealed by Edmundo Largaespada, P. E.
   (Submitted under previous NOA No.06–0308.05)
6. Laboratory compliance letter for Test Reports No.'s **FTL–3810**, **FTL–3819** and **FTL–3808**, issued by Fenestration Testing Laboratory, Inc., dated 05/16/03, 06/09/03 and 05/14/03, all signed and sealed by Joseph C. Chan, P. E.
   (Submitted under previous NOA No. 03–0910.01)

G. OTHERS

1. Notice of Acceptance No. **08–0417.06**, issued to ES Windows, LLC, for their Series "**1500 Aluminum Fixed Window – L.M.I.**", approved on 06/05/08 and expiring on 11/06/13.

Jaime D. Gascon, P. E.
Product Control Section Supervisor
NOA No. 12–0223.41
Expiration Date: November 06, 2013
Approval Date: May 17, 2012

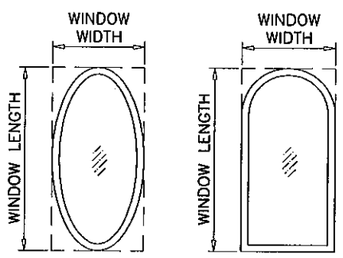

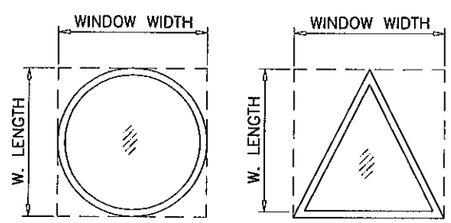

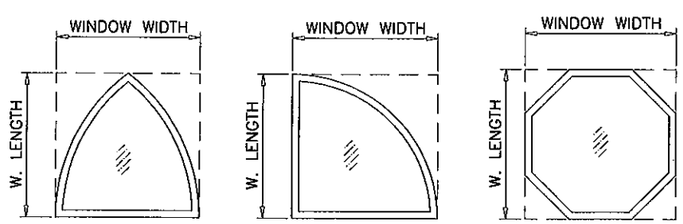

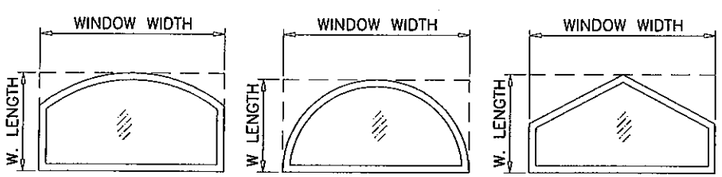

ALLOWABLE LOADS FOR ALTERNATE SHAPES AS SHOWN ABOVE OR SIMILAR CAN BE VERIFIED BY INSCRIBING PICTURE WINDOW SHAPE WITHIN SQUARE OR RECTANGLE AS SHOWN IN DOTTED LINES AND OBTAINING ALLOWABLE LOADS FROM THOSE SHAPES.

SERIES-1500 ALUMINUM FIXED WINDOW

APPROVAL APPLIES TO SINGLE UNITS OR SIDE BY SIDE COMBINATIONS OF FIXED/FIXED OR FIXED WITH OTHER MIAMI-DADE COUNTY APPR'D WINDOWS USING MIAMI-DADE COUNTY APPROVED MULLIONS IN BETWEEN.
LOWER DESIGN PRESSURE FROM WINDOWS OR MULLION APPROVAL WILL APPLY TO ENTIRE SYSTEM.

DESIGN LOAD RATING FOR THESE WINDOWS TO BE AS PER CHARTS SHOWN ON SHEET 3.

THIS PRODUCT HAS BEEN DESIGNED AND TESTED TO COMPLY WITH THE REQUIREMENTS OF THE FLORIDA BUILDING CODE INCLUDING HIGH VELOCITY HURRICANE ZONE (HVHZ).

WOOD BUCKS BY OTHERS, MUST BE ANCHORED PROPERLY TO TRANSFER LOADS TO THE STRUCTURE.

ANCHORS SHALL BE AS LISTED, SPACED AS SHOWN ON DETAILS, ANCHORS EMBEDMENT TO BASE MATERIAL SHALL BE BEYOND WALL DRESSING OR STUCCO.

ANCHORING OR LOADING CONDITIONS NOT SHOWN IN THESE DETAILS ARE NOT PART OF THIS APPROVAL.

A LOAD DURATION INCREASE IS USED IN DESIGN OF ANCHORS INTO WOOD ONLY.

MATERIALS INCLUDING BUT NOT LIMITED TO STEEL/METAL SCREWS, THAT COME INTO CONTACT WITH OTHER DISSIMILAR MATERIALS SHALL MEET THE REQUIREMENTS OF THE FLORIDA BLDG. CODE SECTION 2003.8.4.

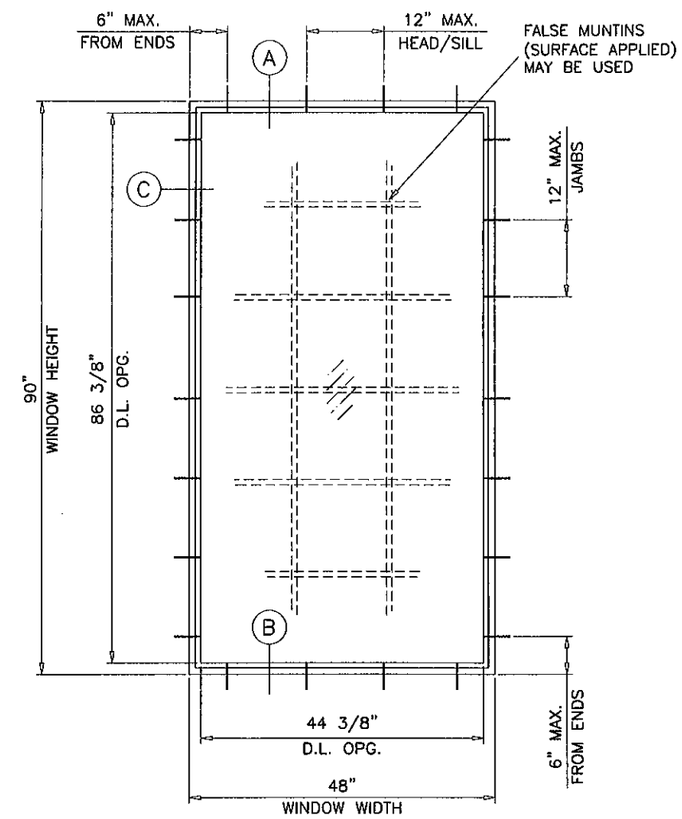

TYPICAL ELEVATION

THESE WINDOWS ARE RATED FOR LARGE & SMALL MISSILE IMPACT. SHUTTERS ARE NOT REQUIRED.

Engr: JAVAD AHMAD
CIVIL
FLA. PE # 70592
C.A.N. 3538
DEC 12 2011

PRODUCT REVISED
as complying with the Florida Building Code
Acceptance No 12-0223.41
Expiration Date 11/06/2013
By
Miami Dade Product Control

AL-FAROOQ CORPORATION
ENGINEERS & PRODUCT DEVELOPMENT
1235 S.W. 87 AVE
MIAMI, FLORIDA 33174
TEL. (305) 264-8100 FAX. (305) 262-6978
COMP-ANL\W03-57ESW

SERIES-1500 ALUMINUM FIXED WINDOW (L.M.I.)
E.S. WINDOWS, LLC
5220 N.W. 72 AVE. BAY #4
MIAMI, FL. 33166
TEL. (305) 624-7775 FAX. (305) 624-7777

revisions:

no	date	by	description
B	09.05.05		UPDATED FOR 2004 FBC
C	11.11.06		SHAPES ADDED
D	03.26.08		NOTE REV.
E	12.09.11		ALT. GLAZING OPTION ADDED

date: 07-31-03
scale: 1/2"=1'-0"
dr. by: HAMID
chk. by:

drawing no.
W03-57

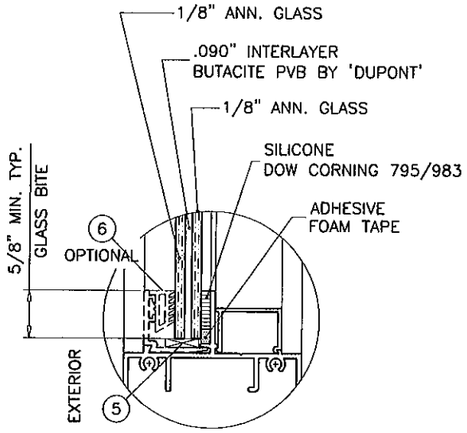

GLASS TYPE 'A'

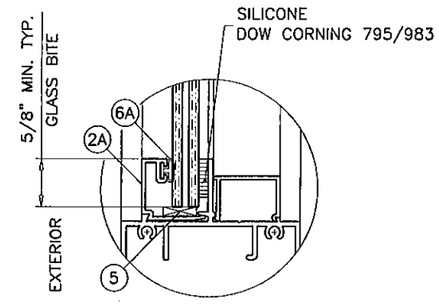

5/16" LAM. GLASS

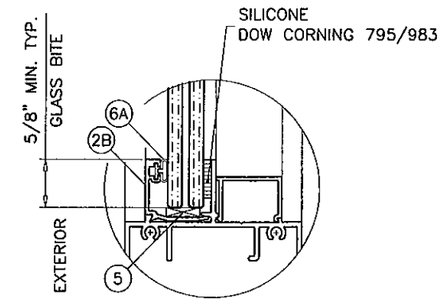

7/16" LAM. GLASS

ALT. GLAZING OPTIONS

SQUARE GLAZING STOP CAN BE USED WITH ALL GLASS TYPES SHOWN ON THIS SHEET.

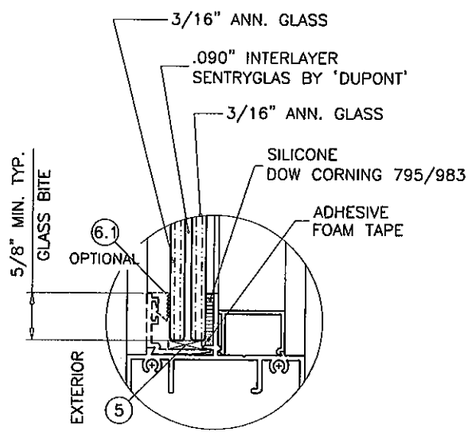

GLASS TYPE 'B'

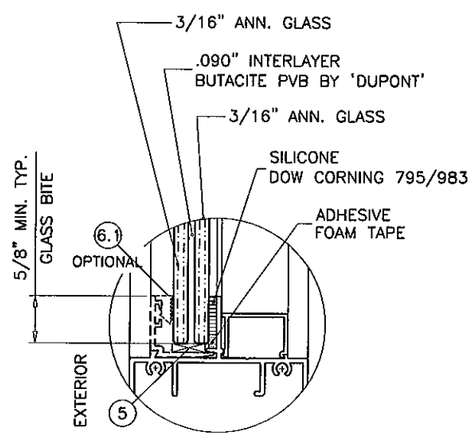

GLASS TYPE 'B1'

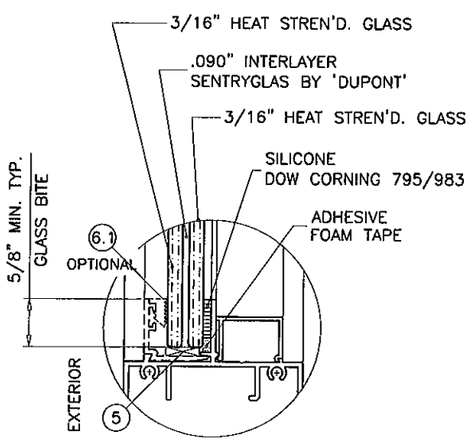

GLASS TYPE 'C'

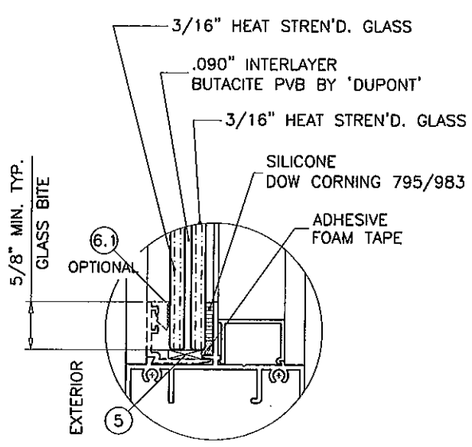

GLASS TYPE 'C1'

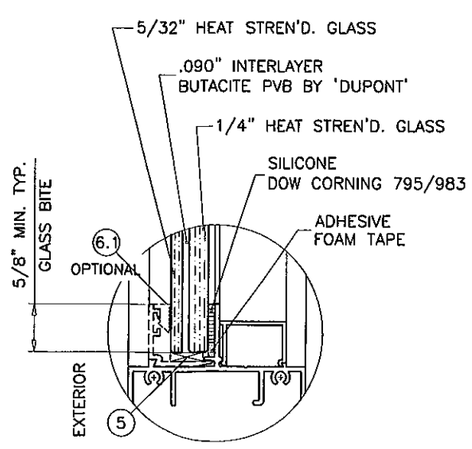

GLASS TYPE 'C2'

Engr: JAVAD AHMAD
CIVIL
FLA. PE # 70592
C.A.N. 3538

DEC 12 2011

PRODUCT REVISED
as complying with the Florida
Building Code
Acceptance No 12-0223.41
Expiration Date 11/06/2013
By
Miami Dade Product Control

AL-FAROOQ CORPORATION
ENGINEERS & PRODUCT DEVELOPMENT
1235 S.W. 87 AVE
MIAMI, FLORIDA 33174
TEL. (305) 264-8100 FAX. (305) 262-6978
COMP-ANL\W03-57ESW

SERIES-1500 ALUMINUM FIXED WINDOW (L.M.I.)

E.S. WINDOWS, LLC
5220 N.W. 72 AVE. BAY #4
MIAMI, FL. 33166
TEL. (305) 624-7777 FAX. (305) 624-7775

revisions:

no	date	by	description
B	09.05.05		CHARTS REV.
C	11.11.06		SHAPES ADDED
D	03.26.08		GLASS TYPE C2 ADDED
E	12.09.11		ALT. GLAZING OPTION ADDED

date: 07-31-03
scale: 1/2" = 1"
dr. by: HAMID
chk. by:

drawing no.
W03-57

DESIGN LOAD CAPACITY – PSF

WINDOW DIMS.		ANCHOR TYPES 'A' & 'C'						ANCHOR TYPES 'B' & 'C'					
		GLASS TYPE 'A'		GLASS TYPES 'B' & 'B1'		GLASS TYPES 'C', 'C1' & 'C2'		GLASS TYPE 'A'		GLASS TYPES 'B' & 'B1'		GLASS TYPES 'C', 'C1' & 'C2'	
WIDTH	HEIGHT	EXT.(+)	INT.(−)	EXT.(+)	INT.(−)	EXT.(+)	INT.(−)	EXT.(+)	INT.(−)	EXT.(+)	INT.(−)	EXT.(+)	INT.(−)
18"	36"	70.0	70.0	70.0	90.0	70.0	80.0	70.0	70.0	70.0	90.0	70.0	80.0
24"		70.0	70.0	70.0	72.0	70.0	72.0	70.0	70.0	70.0	90.0	70.0	80.0
30"		57.6	57.6	57.6	57.6	57.6	57.6	70.0	70.0	70.0	90.0	70.0	80.0
36"		48.0	48.0	48.0	48.0	48.0	48.0	70.0	70.0	70.0	90.0	70.0	80.0
42"		48.0	48.0	48.0	48.0	48.0	48.0	70.0	70.0	70.0	90.0	70.0	80.0
48"		48.0	48.0	48.0	48.0	48.0	48.0	70.0	70.0	70.0	90.0	70.0	80.0
54"		48.0	48.0	48.0	48.0	48.0	48.0	70.0	70.0	70.0	90.0	70.0	80.0
60"		48.0	48.0	48.0	48.0	48.0	48.0	67.3	67.3	70.0	90.0	70.0	80.0
18"	48"	70.0	70.0	70.0	90.0	70.0	80.0	70.0	70.0	70.0	90.0	70.0	80.0
24"		70.0	70.0	70.0	72.0	70.0	72.0	70.0	70.0	70.0	90.0	70.0	80.0
30"		57.6	57.6	57.6	57.6	57.6	57.6	70.0	70.0	70.0	90.0	70.0	80.0
36"		48.0	48.0	48.0	48.0	48.0	48.0	70.0	70.0	70.0	90.0	70.0	80.0
42"		41.1	41.1	41.1	41.1	41.1	41.1	60.0	60.0	70.0	90.0	70.0	80.0
48"		–	–	36.0	36.0	36.0	36.0	–	–	70.0	90.0	70.0	80.0
54"		–	–	36.0	36.0	36.0	36.0	–	–	70.0	90.0	70.0	80.0
60"		–	–	36.0	36.0	36.0	36.0	–	–	70.0	90.0	70.0	80.0
18"	60"	70.0	70.0	70.0	90.0	70.0	80.0	70.0	70.0	70.0	90.0	70.0	80.0
24"		70.0	70.0	70.0	72.0	70.0	72.0	70.0	70.0	70.0	90.0	70.0	80.0
30"		57.6	57.6	57.6	57.6	57.6	57.6	70.0	70.0	70.0	90.0	70.0	80.0
36"		48.0	48.0	48.0	48.0	48.0	48.0	67.3	67.3	70.0	90.0	70.0	80.0
42"		–	–	41.1	41.1	41.1	41.1	–	–	70.0	90.0	70.0	80.0
48"		–	–	36.0	36.0	36.0	36.0	–	–	70.0	90.0	70.0	80.0
54"		–	–	–	–	32.0	32.0	–	–	–	–	62.2	71.1
60"		–	–	–	–	28.8	28.8	–	–	–	–	56.0	64.0
18"	72"	70.0	70.0	70.0	90.0	70.0	80.0	70.0	70.0	70.0	90.0	70.0	80.0
24"		70.0	70.0	70.0	72.0	70.0	72.0	70.0	70.0	70.0	90.0	70.0	80.0
30"		57.6	57.6	57.6	57.6	57.6	57.6	64.2	64.2	70.0	90.0	70.0	80.0
36"		–	–	48.0	48.0	48.0	48.0	–	–	70.0	90.0	70.0	80.0
42"		–	–	–	–	41.1	41.1	–	–	–	–	70.0	80.0
48"		–	–	–	–	36.0	36.0	–	–	–	–	70.0	80.0
54"		–	–	–	–	32.0	32.0	–	–	–	–	62.2	71.1
60"		–	–	–	–	28.8	28.8	–	–	–	–	56.0	64.0
18"	84"	70.0	70.0	70.0	90.0	70.0	80.0	70.0	70.0	70.0	90.0	70.0	80.0
24"		70.0	70.0	70.0	72.0	70.0	72.0	70.0	70.0	70.0	90.0	70.0	80.0
30"		–	–	57.6	57.6	57.6	57.6	–	–	70.0	90.0	70.0	80.0
36"		–	–	–	–	48.0	48.0	–	–	–	–	70.0	80.0
42"		–	–	–	–	41.1	41.1	–	–	–	–	70.0	80.0
48"		–	–	–	–	36.0	36.0	–	–	–	–	70.0	80.0
18"	90"	70.0	70.0	70.0	90.0	70.0	80.0	70.0	70.0	70.0	90.0	70.0	80.0
24"		70.0	70.0	70.0	72.0	70.0	72.0	70.0	70.0	70.0	90.0	70.0	80.0
30"		–	–	57.6	57.6	57.6	57.6	–	–	70.0	90.0	70.0	80.0
36"		–	–	–	–	48.0	48.0	–	–	–	–	70.0	80.0
42"		–	–	–	–	41.1	41.1	–	–	–	–	70.0	80.0
48"		–	–	–	–	36.0	36.0	–	–	–	–	70.0	80.0
18"	96"	70.0	70.0	70.0	90.0	70.0	80.0	70.0	70.0	70.0	90.0	70.0	80.0
24"		–	–	70.0	72.0	70.0	72.0	–	–	70.0	90.0	70.0	80.0
30"		–	–	57.6	57.6	57.6	57.6	–	–	70.0	90.0	70.0	80.0
36"		–	–	–	–	48.0	48.0	–	–	–	–	70.0	80.0
42"		–	–	–	–	41.1	41.1	–	–	–	–	70.0	80.0

NOTE:
GLASS CAPACITIES ON THIS SHEET ARE BASED ON ASTM E1300-04 (3 SEC. GUSTS).

DESIGN LOAD CAPACITY – PSF

WINDOW DIMS.		ANCHOR TYPES 'A' & 'C'						ANCHOR TYPES 'B' & 'C'					
		GLASS TYPE 'A'		GLASS TYPES 'B' & 'B1'		GLASS TYPES 'C', 'C1' & 'C2'		GLASS TYPE 'A'		GLASS TYPES 'B' & 'B1'		GLASS TYPES 'C', 'C1' & 'C2'	
WIDTH	HEIGHT	EXT.(+)	INT.(−)	EXT.(+)	INT.(−)	EXT.(+)	INT.(−)	EXT.(+)	INT.(−)	EXT.(+)	INT.(−)	EXT.(+)	INT.(−)
18"	108"	70.0	70.0	70.0	90.0	70.0	80.0	70.0	70.0	70.0	90.0	70.0	80.0
24"		–	–	70.0	72.0	70.0	72.0	–	–	70.0	90.0	70.0	80.0
30"		–	–	–	–	57.6	57.6	–	–	–	–	70.0	80.0
36"		–	–	–	–	48.0	48.0	–	–	–	–	70.0	80.0
18"	120"	56.2	56.2	70.0	90.0	70.0	80.0	56.2	56.2	70.0	90.0	70.0	80.0
24"		–	–	70.0	72.0	70.0	72.0	–	–	70.0	90.0	70.0	80.0
30"		–	–	–	–	57.6	57.6	–	–	–	–	70.0	80.0
36"		–	–	–	–	48.0	48.0	–	–	–	–	70.0	80.0

DESIGN LOAD CAPACITY – PSF

WINDOW DIMS.		ANCHOR TYPES 'A' & 'C'						ANCHOR TYPES 'B' & 'C'					
		GLASS TYPE 'A'		GLASS TYPES 'B' & 'B1'		GLASS TYPES 'C', 'C1' & 'C2'		GLASS TYPE 'A'		GLASS TYPES 'B' & 'B1'		GLASS TYPES 'C', 'C1' & 'C2'	
WIDTH	HEIGHT	EXT.(+)	INT.(−)	EXT.(+)	INT.(−)	EXT.(+)	INT.(−)	EXT.(+)	INT.(−)	EXT.(+)	INT.(−)	EXT.(+)	INT.(−)
19-1/8"	26"	70.0	70.0	70.0	90.0	70.0	80.0	70.0	70.0	70.0	90.0	70.0	80.0
26-1/2"		70.0	70.0	70.0	90.0	70.0	80.0	70.0	70.0	70.0	90.0	70.0	80.0
37"		66.5	66.5	66.5	66.5	66.5	66.5	70.0	70.0	70.0	90.0	70.0	80.0
48"		66.5	66.5	66.5	66.5	66.5	66.5	70.0	70.0	70.0	90.0	70.0	80.0
53-1/8"		66.5	66.5	66.5	66.5	66.5	66.5	70.0	70.0	70.0	90.0	70.0	80.0
19-1/8"	38-3/8"	70.0	70.0	70.0	90.0	70.0	80.0	70.0	70.0	70.0	90.0	70.0	80.0
26-1/2"		65.2	65.2	65.2	65.2	65.2	65.2	70.0	70.0	70.0	90.0	70.0	80.0
37"		46.7	46.7	46.7	46.7	46.7	46.7	68.1	68.1	70.0	90.0	70.0	80.0
48"		45.0	45.0	45.0	45.0	45.0	45.0	65.7	65.7	70.0	90.0	70.0	80.0
53-1/8"		45.0	45.0	45.0	45.0	45.0	45.0	65.7	65.7	70.0	90.0	70.0	80.0
19-1/8"	50-5/8"	70.0	70.0	70.0	90.0	70.0	80.0	70.0	70.0	70.0	90.0	70.0	80.0
26-1/2"		65.2	65.2	65.2	65.2	65.2	65.2	70.0	70.0	70.0	90.0	70.0	80.0
37"		46.7	46.7	46.7	46.7	46.7	46.7	68.1	68.1	70.0	90.0	70.0	80.0
48"		–	–	36.0	36.0	36.0	36.0	–	–	70.0	90.0	70.0	80.0
53-1/8"		–	–	34.1	34.1	34.1	34.1	–	–	66.4	85.3	66.4	75.9
19-1/8"	58"	70.0	70.0	70.0	90.0	70.0	80.0	70.0	70.0	70.0	90.0	70.0	80.0
26-1/2"		65.2	65.2	65.2	65.2	65.2	65.2	70.0	70.0	70.0	90.0	70.0	80.0
37"		46.7	46.7	46.7	46.7	46.7	46.7	68.1	68.1	70.0	90.0	70.0	80.0
48"		–	–	36.0	36.0	36.0	36.0	–	–	70.0	90.0	70.0	80.0
53-1/8"		–	–	–	–	32.5	32.5	–	–	–	–	63.2	72.3
19-1/8"	63"	70.0	70.0	70.0	90.0	70.0	80.0	70.0	70.0	70.0	90.0	70.0	80.0
26-1/2"		65.2	65.2	65.2	65.2	65.2	65.2	70.0	70.0	70.0	90.0	70.0	80.0
37"		–	–	46.7	46.7	46.7	46.7	–	–	70.0	90.0	70.0	80.0
48"		–	–	–	–	36.0	36.0	–	–	–	–	70.0	80.0
53-1/8"		–	–	–	–	32.5	32.5	–	–	–	–	63.2	72.3
19-1/8"	74-1/4"	70.0	70.0	70.0	90.0	70.0	80.0	70.0	70.0	70.0	90.0	70.0	80.0
26-1/2"		65.2	65.2	65.2	65.2	65.2	65.2	70.0	70.0	70.0	90.0	70.0	80.0
37"		–	–	46.7	46.7	46.7	46.7	–	–	70.0	90.0	70.0	80.0
48"		–	–	–	–	36.0	36.0	–	–	–	–	70.0	80.0
53-1/8"		–	–	–	–	32.5	32.5	–	–	–	–	63.2	72.3

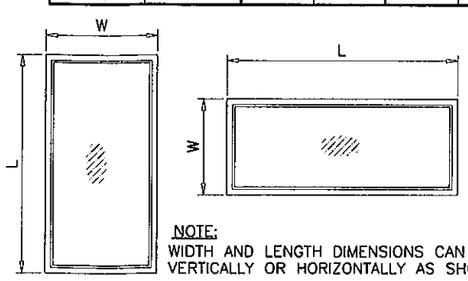

NOTE:
WIDTH AND LENGTH DIMENSIONS CAN BE ORIENTED VERTICALLY OR HORIZONTALLY AS SHOWN ABOVE.

Engr: JAVAD AHMAD
CIVIL
FLA. PE # 70592
C.A.N. 3538
DEC 12 2011

PRODUCT REVISED
as complying with the Florida Building Code
Acceptance No 12-0223.41
Expiration Date 11/06/2013
By
Miami Dade Product Control

AL-FAROOQ CORPORATION
ENGINEERS & PRODUCT DEVELOPMENT
1235 S.W. 87 AVE
MIAMI, FLORIDA 33174
TEL. (305) 264-8100 FAX. (305) 262-6978
COMP-ANL\W03-57ESW

SERIES-1500 ALUMINUM FIXED WINDOW (L.M.I.)

E.S. WINDOWS, LLC
5220 N.W. 72 AVE. BAY #4
MIAMI, FL. 33166
TEL. (305) 624-7775 FAX. (305) 624-7777

revisions:

no	date	by	description
B	09.05.05		CHARTS REV.
C	11.11.06		SHAPES ADDED
D	03.26.08		GLASS TYPE C2 ADDED
E	12.09.11		ALT. GLAZING OPTION ADDED

date: 07-31-03
scale: –
dr. by: HAMID
chk. by:

drawing no.
W03-57

sheet 3 of 7

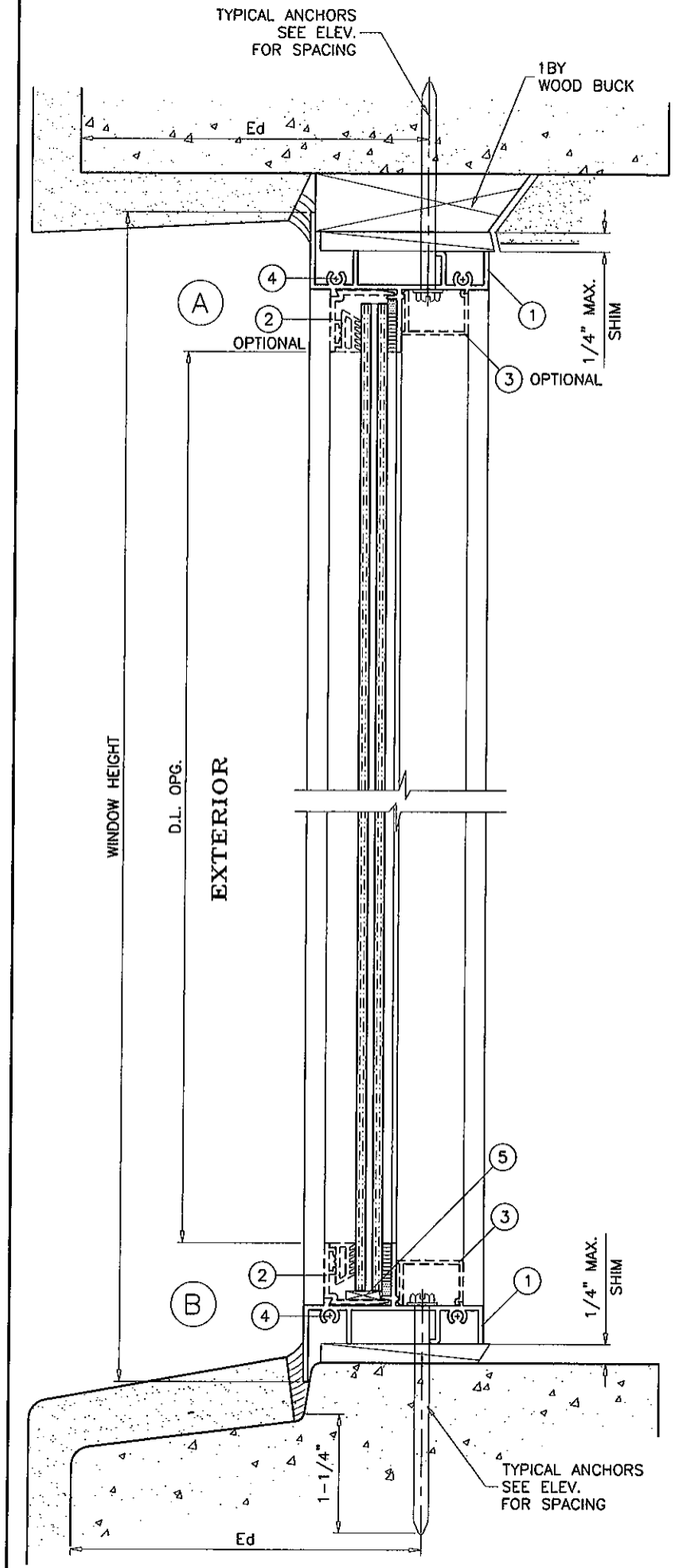

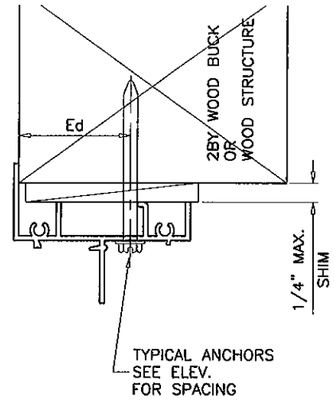

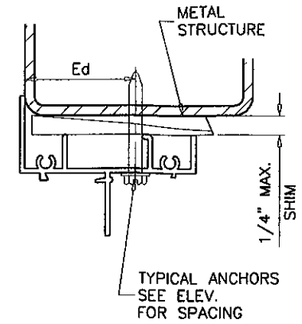

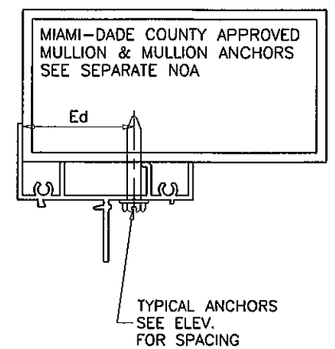

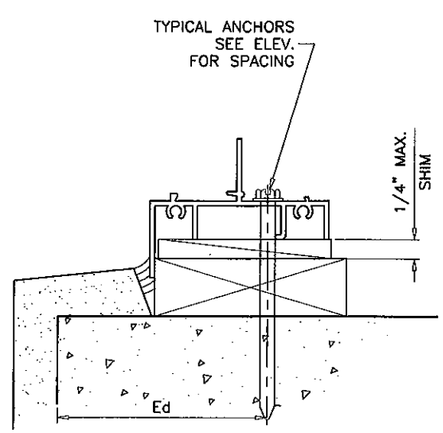

WOOD BUCKS AND METAL STRUCTURE NOT BY E.S. WINDOWS, MUST SUSTAIN LOADS IMPOSED BY GLAZING SYSTEM AND TRANSFER THEM TO THE BUILDING STRUCTURE.

TYPICAL ANCHORS: SEE ELEV. FOR SPACING

TYPE 'A'– 3/16" DIA. ULTRACON BY 'ELCO' (Fu=177 KSI, Fy=155 KSI)

INTO 2BY WOOD BUCKS OR WOOD STRUCTURES
1–3/8" MIN. PENETRATION INTO WOOD

THRU 1BY BUCKS INTO CONC. OR MASONRY
1–1/4" MIN. EMBED INTO CONC. OR MASONRY

DIRECTLY INTO CONC. OR MASONRY
1–1/4" MIN. EMBED INTO CONC. OR MASONRY

3/16" TEKS OR SELF DRILLING SCREWS (GRADE 5 CRS)
INTO METAL STRUCTURES
STEEL : 12 GA. MIN. (Fy = 36 KSI MIN.)
ALUMINUM : 1/8" THK. MIN. (6063–T5 MIN.)
(STEEL IN CONTACT WITH ALUMINUM TO BE PLATED OR PAINTED)

TYPE 'B'– 1/4" DIA. ULTRACON BY 'ELCO' (Fu=177 KSI, Fy=155 KSI)

INTO 2BY WOOD BUCKS OR WOOD STRUCTURES
1–3/8" MIN. PENETRATION INTO WOOD

THRU 1BY BUCKS INTO CONC. OR MASONRY
1–1/4" MIN. EMBED INTO CONC. OR MASONRY

DIRECTLY INTO CONC. OR MASONRY
1–1/4" MIN. EMBED INTO CONC. OR MASONRY

#14 SMS OR SELF DRILLING SCREWS (GRADE 2 CRS)
INTO METAL STRUCTURES
STEEL : 12 GA. MIN. (Fy = 36 KSI MIN.)
ALUMINUM : 1/8" THK. MIN. (6063–T5 MIN.)
(STEEL IN CONTACT WITH ALUMINUM TO BE PLATED OR PAINTED)

TYPE 'C'– #10 SMS OR SELF DRILLING SCREWS (GRADE 2 CRS)
INTO MIAMI–DADE COUNTY APPROVED MULLIONS (MIN. THK. = .090")

Ed = ANCHOR EDGE DISTANCE

INTO CONCRETE AND MASONRY = 1–3/8" MIN.
INTO WOOD STRUCTURE = 1" MIN.
INTO METAL STRUCTURE = 1/2" MIN.

CONCRETE AT HEAD, SILL OR JAMBS f'c = 3000 PSI MIN.
C–90 HOLLOW/FILLED BLOCK AT JAMBS f'm = 2000 PSI MIN.

SEALANT:

ALL JOINTS AND FRAME CONNECTIONS SEALED WITH WHITE/ALUM COLOR SILICONE.

Engr: JAVAD AHMAD
CIVIL
FLA. PE # 70592
C.A.N. 3538

DEC 12 2011

PRODUCT REVISED
as complying with the Florida
Building Code
Acceptance No 12-0223.41
Expiration Date 11/06/2013
By
Miami Dade Product Control

AL-FAROOQ CORPORATION
ENGINEERS & PRODUCT DEVELOPMENT
1235 S.W. 87 AVE
MIAMI, FLORIDA 33174
TEL. (305) 264-8100 FAX. (305) 262-6978
COMP-ANL\W03-57ESW

SERIES-1500 ALUMINUM FIXED WINDOW (L.M.I.)

E.S. WINDOWS, LLC
5220 N.W. 72 AVE. BAY #4
MIAMI, FL. 33166
TEL. (305) 624-7775 FAX. (305) 624-7777

revisions:

no	date	by	description
B	09.05.05		ANCHORS REV.
C	11.11.06		SHAPES ADDED
D	03.26.08		NO CHANGE THIS SHEET
E	12.09.11		ANCHORS REV.

date: 07-31-03
scale: 1/2" = 1"
dr. by: HAMID
chk. by:

drawing no.
W03-57

ITEM	PART #	QUANTITY	DESCRIPTION	MATERIAL	MANF./SUPPLIER/REMARKS
1	ES5001	4	WINDOW FRAME	6063-T5	-
2	ES1008	OPTIONAL	GLAZING STOP	6063-T6	-
2A	ES1103	4/ WDW.	GLAZING STOP (5/16" GLASS)	6063-T5	-
2B	ES1017	4/ WDW.	GLAZING STOP (7/16" GLASS)	6063-T5	-
3	ES5002	4	FRAME COVER (OPTIONAL)	6063-T5	-
4	#8 X 1"	AS REQD.	ASSEMBLY SCREWS	CRS	PH SMS
5	27-372	2/ LITE	SETTING BLOCK	EPDM	7/16" X 3/16" X 3-1/2" LONG
6	ES1010	OPTIONAL	GLAZING WEDGE	SOFT PVC	DUROMETER 70 SHORE 'A'
6.1	ES4013	OPTIONAL	GLAZING WEDGE	SOFT PVC	DUROMETER 70 SHORE 'A'
6A	27-425	4/ WDW.	GLAZING GASKET	EPDM	DUROMETER 60 SHORE 'A'
7	ES1505	-	FLUSH FRAME ADAPTER	6063-T5	OPTIONAL

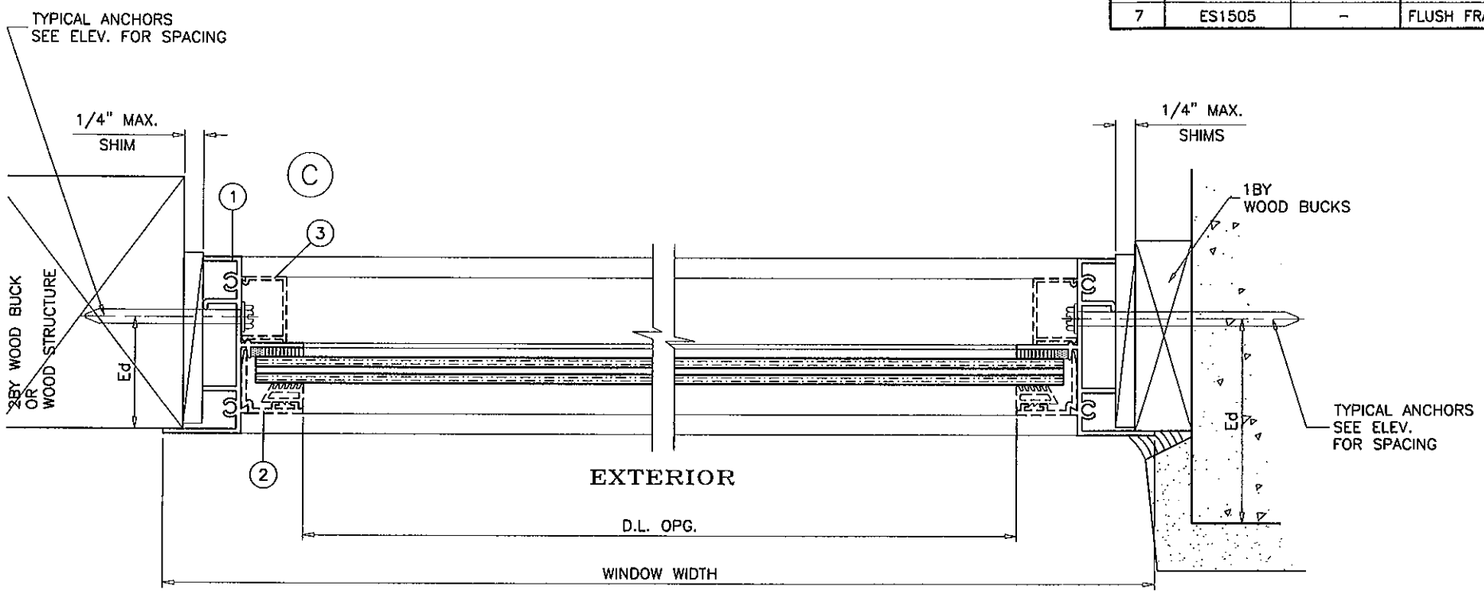

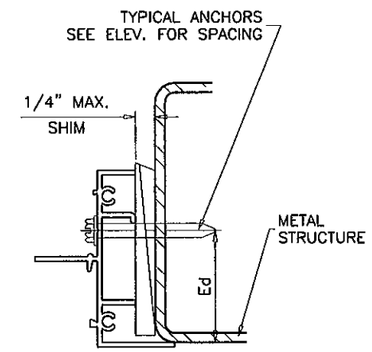

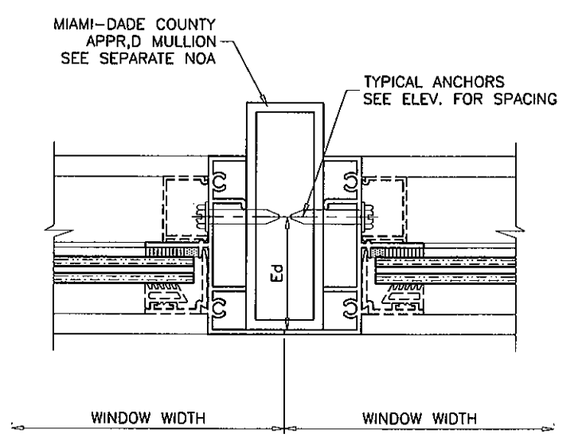

Engr: JAVAD AHMAD
CIVIL
FLA. PE # 70592
C.A.N. 3538
DEC 12 2011

PRODUCT REVISED
as complying with the Florida
Building Code
Acceptance No 12-0223.41
Expiration Date 11/06/2013
By
Miami Dade Product Control

AL-FAROOQ CORPORATION
ENGINEERS & PRODUCT DEVELOPMENT
1235 S.W. 87 AVE
MIAMI, FLORIDA 33174
TEL. (305) 264-8100 FAX. (305) 262-6978
COMP-ANL\W03-57ESW

SERIES-1500 ALUMINUM FIXED WINDOW (L.M.I.)

E.S. WINDOWS, LLC
5220 N.W. 72 AVE. BAY #4
MIAMI, FL. 33166
TEL. (305) 624-7775 FAX. (305) 624-7777

revisions:

no	date	by	description
B	09.05.05		ANCHORS REV.
C	11.11.06		SHAPES ADDED
D	03.26.08		NO CHANGE THIS SHEET
E	12.09.11		ALT. GLAZING OPTION ADDED

date: 07-31-03
scale: 1/2" = 1"
dr. by: HAMID
chk. by:

drawing no.
W03-57

sheet 5 of 7

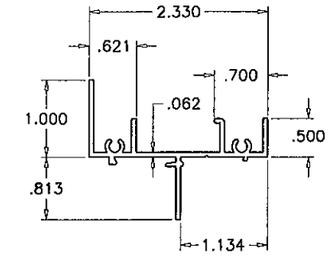

1 FRAME

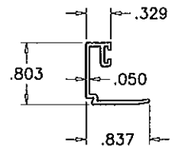

2A SQUARE GLAZING STOP

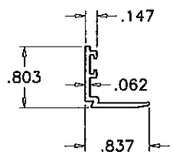

2 GLAZING STOP (OPTIONAL)

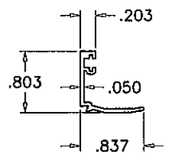

2B SQUARE GLAZING STOP

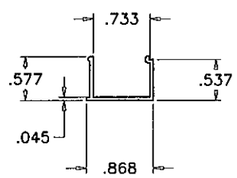

3 FRAME COVER (OPTIONAL)

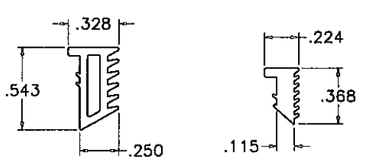

6 6.1 GLAZING WEDGE (OPTIONAL)
SCALE 1:1

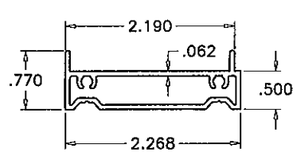

7 FLUSH FRAME ADAPTER

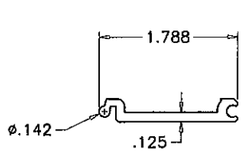

– ALUM CORNER LOCK
(6063-T5)

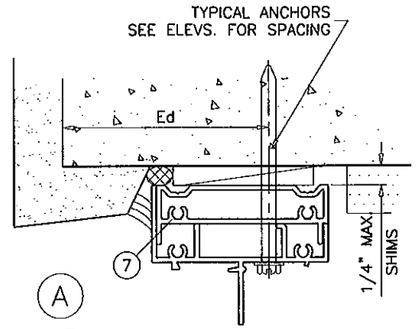

A ALT.

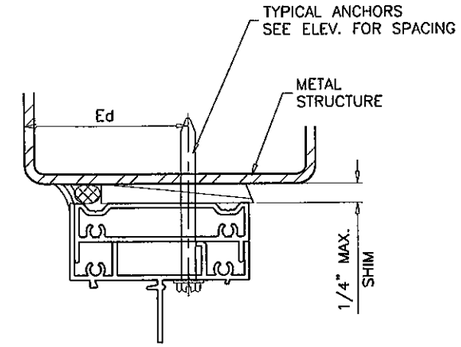

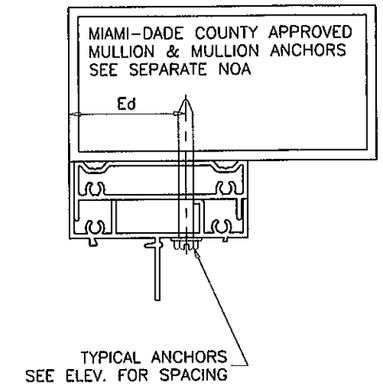

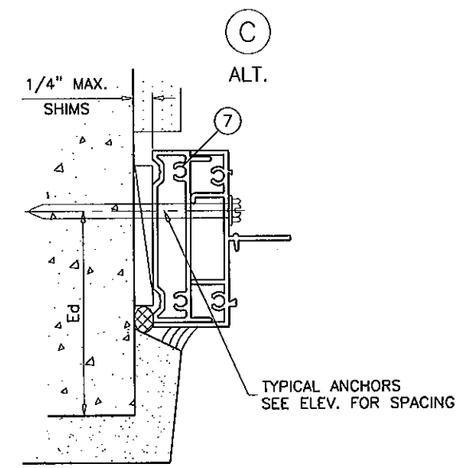

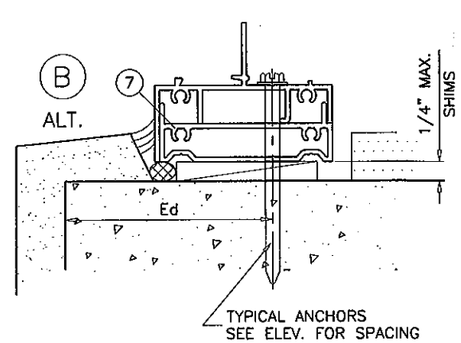

INSTALLATION DETAILS WITH FLUSH FRAME ADAPTER

Engr: JAVAD AHMAD
CIVIL
FLA. PE # 70592
C.A.N. 3538
DEC 12 2011

PRODUCT REVISED
as complying with the Florida
Building Code
Acceptance No 12-0223.41
Expiration Date 11/06/2013
Miami Dade Product Control

AL-FAROOQ CORPORATION
ENGINEERS & PRODUCT DEVELOPMENT
1235 S.W. 87 AVE
MIAMI, FLORIDA 33174
TEL. (305) 264-8100 FAX. (305) 262-6978
COMP-ANL\W03-57ESW

SERIES-1500 ALUMINUM FIXED WINDOW (L.M.I.)

E.S. WINDOWS, LLC
5220 N.W. 72 AVE. BAY #4
MIAMI, FL. 33166
TEL. (305) 624-7775 FAX. (305) 624-7777

revisions:

no	date	by	description
B	09.05.05		FRAME ADAPTER ADDED
C	11.11.06		SHAPES ADDED
D	03.26.08		NO CHANGE THIS SHEET
E	12.09.11		ALT. GLAZING OPTION ADDED

date: 07-31-03
scale: 1/2" = 1"
dr. by: HAMID
chk. by:

drawing no.
W03-57

sheet 6 of 7

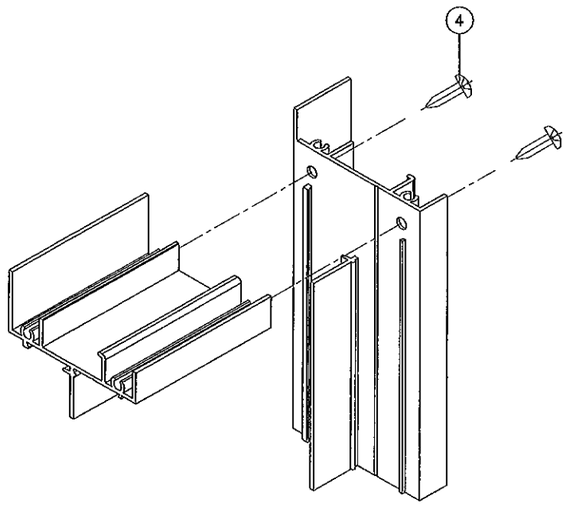

RECT. OR SQUARE WINDOWS

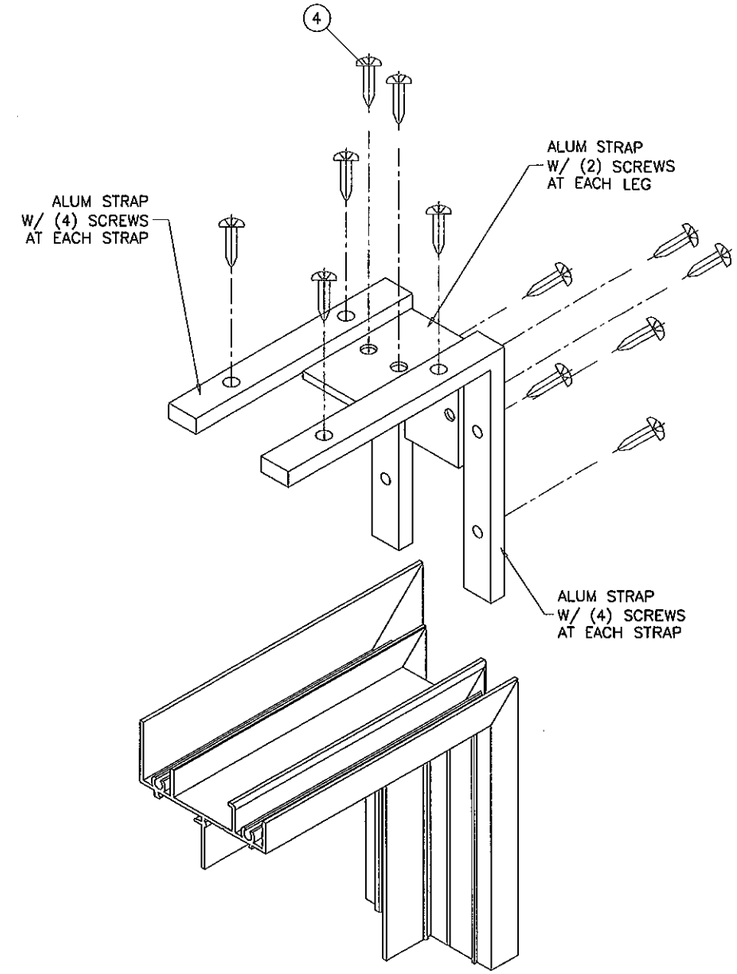

RECT. OR SQUARE WINDOWS

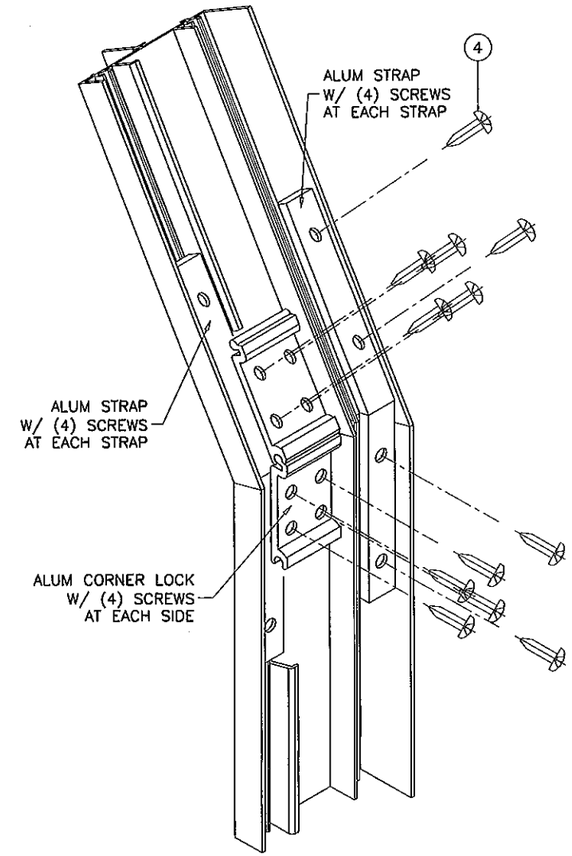

CIRCULAR WINDOWS

TYPICAL CORNER DETAILS

Engr: JAVAD, AHMAD
CIVIL
FLA. PE # 70592
C.A.N. 3538
DEC 12 2011

PRODUCT REVISED
as complying with the Florida
Building Code
Acceptance No 12-0223.41
Expiration Date 11/06/2013
By
Miami Dade Product Control

AL-FAROOQ CORPORATION
ENGINEERS & PRODUCT DEVELOPMENT
1235 S.W. 87 AVE
MIAMI, FLORIDA 33174
TEL (305) 264-8100 FAX. (305) 262-6978

COMP-ANL\W03-57ESW

SERIES-1500 ALUMINUM FIXED WINDOW (L.M.I.)

E.S. WINDOWS, LLC
5220 N.W. 72 AVE. BAY #4
MIAMI, FL. 33166
TEL. (305) 624-7775 FAX. (305) 624-7777

(revisions:

no	date	by	description
C	11.11.06		SHAPES ADDED
D	03.26.08		NO CHANGE THIS SHEET
E	12.09.11		NO CHANGE THIS SHEET

date: 07-31-03
scale: 1/2" = 1"
dr. by: HAMID
chk. by:

drawing no.
W03-57

sheet 7 of 7