MIAMI-DADE COUNTY
DEPARTMENT OF PERMITTING, ENVIRONMENT, AND REGULATORY AFFAIRS (PERA)
BOARD AND CODE ADMINISTRATION DIVISION

NOTICE OF ACCEPTANCE (NOA)

MIAMI-DADE COUNTY
PRODUCT CONTROL SECTION
11805 SW 26 Street, Room 208
Miami, Florida 33175-2474
T (786) 315-2590 F (786) 315-2599
www.miamidade.gov/pera/

E.S. Windows, LLC
10653 NE Quaybridge Ct.
Miami, Fl.33138

SCOPE:

This NOA is being issued under the applicable rules and regulations governing the use of construction materials. The documentation submitted has been reviewed and accepted by Miami-Dade County PERA -Product Control Section to be used in Miami Dade County and other areas where allowed by the Authority Having Jurisdiction (AHJ).

This NOA shall not be valid after the expiration date stated below. The Miami-Dade County Product Control Section (In Miami Dade County) and/or the AHJ (in areas other than Miami Dade County) reserve the right to have this product or material tested for quality assurance purposes. If this product or material fails to perform in the accepted manner, the manufacturer will incur the expense of such testing and the AHJ may immediately revoke, modify, or suspend the use of such product or material within their jurisdiction. PERA reserves the right to revoke this acceptance, if it is determined by Miami-Dade County Product Control Section that this product or material fails to meet the requirements of the applicable building code.
This product is approved as described herein, and has been designed to comply with the Florida Building Code, including the High Velocity Hurricane Zone.

DESCRIPTION: Series "**6100**" Aluminum Sliding Glass Doors(Wet glazed) w/ reinforcements-**SMI**

APPROVAL DOCUMENT: Drawing No. **W07-26 Rev G,** titled "Series -6100 Alum Sliding Glass Door (SMI)", sheets 1 through 12 of 12, prepared by Al-Farooq Corporation, dated 04-04-07 and last revised on JUN 19, 2012, signed and sealed by Javad Ahmad, P.E., bearing the Miami-Dade County Product Control Revision stamp with the Notice of Acceptance number and expiration date by the Miami-Dade County Product Control Section.

MISSILE IMPACT RATING: Small Missile Impact Resistant

Limitation:

1. See Design Pressures (DP) Vs reinforcement & glazing options charts in sheets 3.
2. See anchors capacity charts in sheet 5. Lower DP shall control of these charts.
3. Glass lites wider than 36" shall have two setting blocks per FBC requirements.

LABELING: Each unit shall bear a permanent label with the manufacturer's name or logo, city, state and series and following statement: "Miami-Dade County Product Control Approved", noted herein.

RENEWAL of this NOA shall be considered after a renewal application has been filed and there has been no change in the applicable building code negatively affecting the performance of this product.

TERMINATION of this NOA will occur after the expiration date or if there has been a revision or change in the materials, use, and/or manufacture of the product or process. Misuse of this NOA as an endorsement of any product, for sales, advertising or any other purposes shall automatically terminate this NOA. Failure to comply with any section of this NOA shall be cause for termination and removal of NOA.

ADVERTISEMENT: The NOA number preceded by the words Miami-Dade County, Florida, and followed by the expiration date may be displayed in advertising literature. If any portion of the NOA is displayed, then it shall be done in its entirety.

INSPECTION: A copy of this entire NOA shall be provided to the user by the manufacturer or its distributors and shall be available for inspection at the job site at the request of the Building Official.
This NOA **revises & renews NOA # 09-1217.02** and consists of this page 1 and evidence pages E-1 & E-2, as well as approval document mentioned above.
The submitted documentation was reviewed by **Ishaq I. Chanda, P.E.**

MIAMI-DADE COUNTY APPROVED

6/20/12

NOA No 12-0223.45
Expiration Date: June 14, 2013
Approval Date: June 28, 2012

NOTICE OF ACCEPTANCE: EVIDENCE SUBMITTED

A. DRAWINGS

1. Manufacturer's die drawings and sections (Submitted under file # **09-1217.02**)
2. Drawing No. **W07-26 Rev G,** titled "Series -6100 Alum Sliding Glass Door (SMI)", sheets 1 through 12 of 12, prepared by Al-Farooq Corporation, dated 04-04-07 and last revised on JUN 19, 2012, signed and sealed by Javad Ahmad, P.E.

Note: This revision consists of FBC 2010 notes only.

B. TESTS (Submitted under file # 09-1217.02)

1. Test reports on: 1) Air Infiltration Test, per FBC, TAS 202-94
   2) Uniform Static Air Pressure Test, Loading per FBC TAS 202-94
   3) Water Resistance Test, per FBC, TAS 202-94
   4) Small Missile Impact Test per FBC, TAS 201-94
   5) Cyclic Wind Pressure Loading per FBC, TAS 203-94
   6) Forced Entry Test, per FBC 2411 3.2.1, TAS 202-94

along with marked-up drawings and installation diagram of OXXX aluminum sliding glass door, prepared by, prepared by Fenestration Testing Laboratories, Test Report No. **FTL- 6293 (FTL 10063),** dated 10/15/10 and **FTL- 5669 (FTL 08057**, signed and sealed by Jorge A. Causo, P.E. and Michael Wenzel, P.E. respectively.

2. Additional Test reports (transferred from file # **07-0828.08**)
   1) Air Infiltration Test, per FBC, TAS 202-94
   2) Uniform Static Air Pressure Test, Loading per FBC TAS 202-94
   3) Water Resistance Test, per FBC, TAS 202-94
   4) Small Missile Impact Test per FBC, TAS 201-94
   5) Cyclic Wind Pressure Loading per FBC, TAS 203-94
   6) Forced Entry Test, per FBC 2411 3.2.1, TAS 202-94

Along with marked-up drawings and installation diagram of aluminum SGD, prepared by Fenestration Testing Laboratories, Test Report No. **FTL- 5076(FTL06165),** dated 02/22/07, FTL- **5157(FTL061116),** dated 02/14/07 and **FTL- 5158(FTL06115)** dated 02/13/07, all signed and sealed by Michael Wenzel, P.E.

(The test report No. **FTL- 5076** has been revised an addendum letter dated July 10, 2007, issued by Fenestration testing lab, signed & sealed by Carlos S. Roinda, P. E.)

C. CALCULATIONS

1. Anchor verification calculations and structural analysis, complying with FBC-2007, prepared by Al Farooq Corporation, dated 12/09/10, signed and sealed by Javad Ahmad, P.E. (Submitted under file # **09-1217.02**)
2. Glazing complies w/ ASTME-1300-02 & -04

D. QUALITY ASSURANCE

1. Miami Dade Department of Permitting, Environment, and Regulatory Affairs (PERA).

E. MATERIAL CERTIFICATIONS

1. Notice of Acceptance No. **11-0624.02** issued to E.I. DuPont DeNemours & Co., Inc. for their "**DuPont Sentry Glass ® Interlayer**", expiring on 01/14/17.
2. Notice of Acceptance No. **11-0624.01** issued to E.I. DuPont DeNemours for "**Butacite PVB Interlayer**", expiring on 12-11-2016

Ishaq I. Chanda

Ishaq I. Chanda, P.E.
Product Control Examiner
NOA No 12-0223.45
Expiration Date: June 14, 2013
Approval Date: June 28, 2012

NOTICE OF ACCEPTANCE: EVIDENCE SUBMITTED

F. STATEMENTS

1. Statement letter of conformance to FBC 2010 and letter of no financial interest, prepared by Al Farooq Corporation, dated 02/16/12, signed and sealed by Javad Ahmad, P.E.
2. Lab compliance as part of the above referenced test report.

G. OTHER

1. This NOA **revises & renews** NOA # **09-1217.02,** expired on 06/14/12.
2. Final conditional one- year renewal approval subjected to completion of pending test per PERA e-mail dated 06-20-2012 to ES Windows and Engineering consultant (Al-Farooq).
3. Test proposals, # 11-0843 dated July 20, 2011, # 10-0466, dated 07-04-10, # 08-0847, dated 06-24-08 and # 06-0305, dated 07/18/06 approved by BCCO.
4. ES Windows Distribution agreement -Energia Solar, S.A. and ES Windows, LLC, dated 10/20/10, signed by Ms Carla G. Torrente and Andres Chamorro respectively (Submitted under file # **09-1217.02**).

Ishaq I. Chanda

Ishaq I. Chanda, P.E.
Product Control Examiner
NOA No 12-0223.45
Expiration Date: June 14, 2013
Approval Date: June 28, 2012

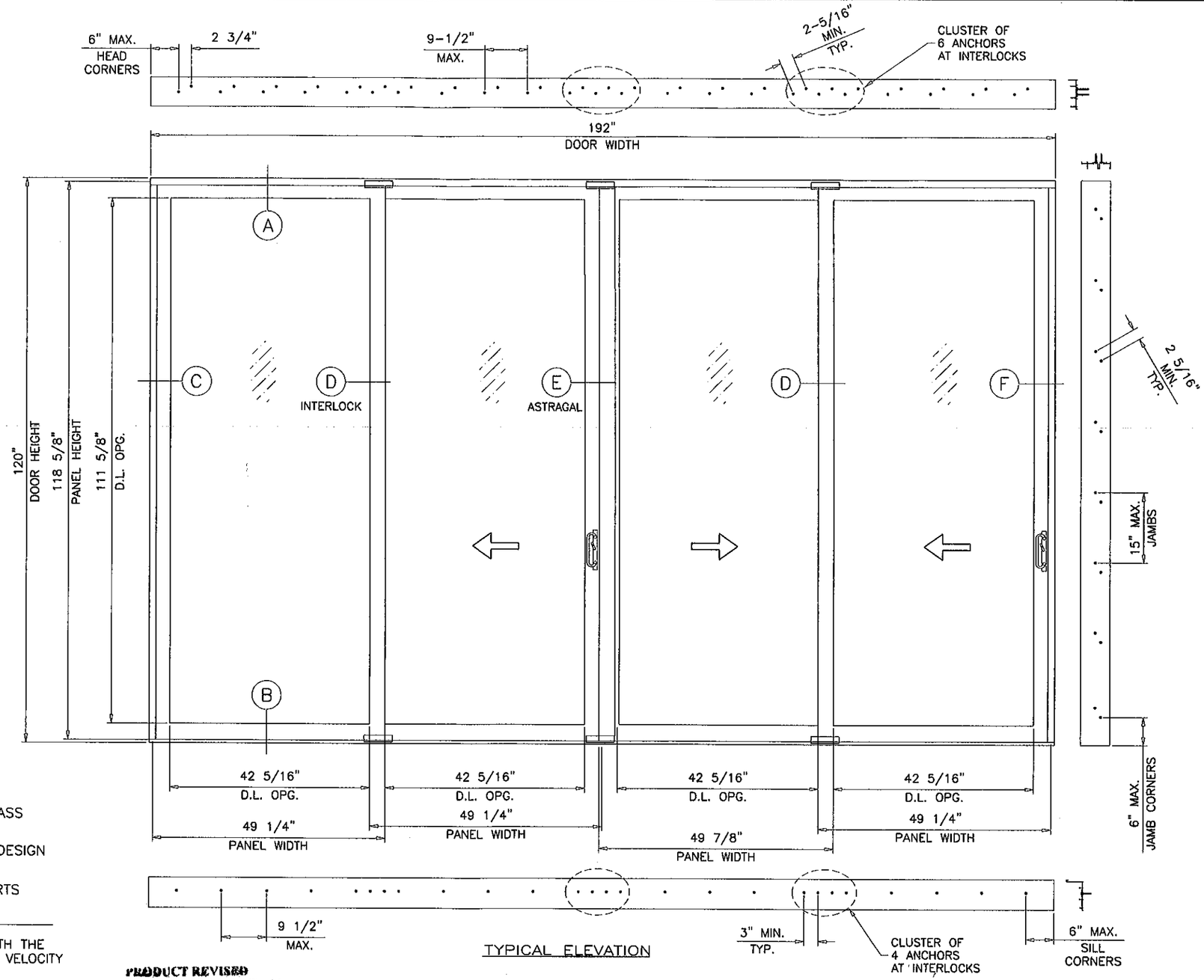

TYPICAL ELEVATION

DAYLITE OPENINGS:
D.L.O. HEIGHT = PANEL HEIGHT – 7.000"
D.L.O. WIDTH = PANEL WIDTH – 6.937"
PANEL HEIGHT = FRAME HEIGHT – 1.375"

SERIES-6100 ALUMINUM SLIDING GLASS DOOR

SEE SHEET 3 FOR DESIGN LOAD CAPACITY OF DESIRED GLASS SIZE BASED ON APPLICABLE GLASS TYPE.

USING CHART ON SHEET 5 SELECT ANCHOR OPTION WITH DESIGN RATING MORE THAN DESIGN LOADS REQUIRED.

LOWER DESIGN PRESSURES FROM GLASS OR ANCHOR CHARTS WILL APPLY TO ENTIRE SYSTEM.

THIS PRODUCT HAS BEEN DESIGNED AND TESTED TO COMPLY WITH THE REQUIREMENTS OF THE FLORIDA BUILDING CODE INCLUDING HIGH VELOCITY HURRICANE ZONE (HVHZ).

WOOD BUCKS BY OTHERS, MUST BE ANCHORED PROPERLY TO TRANSFER LOADS TO THE STRUCTURE.

ANCHORS SHALL BE AS LISTED, SPACED AS SHOWN ON DETAILS, ANCHORS EMBEDMENT TO BASE MATERIAL SHALL BE BEYOND WALL DRESSING OR STUCCO.

ANCHORING OR LOADING CONDITIONS NOT SHOWN IN THESE DETAILS ARE NOT PART OF THIS APPROVAL.

A LOAD DURATION INCREASE IS USED IN DESIGN OF ANCHORS INTO WOOD ONLY.

MATERIALS INCLUDING BUT NOT LIMITED TO STEEL/METAL SCREWS, THAT COME INTO CONTACT WITH OTHER DISSIMILAR MATERIALS SHALL MEET THE REQUIREMENTS OF THE FLORIDA BLDG. CODE SECTION 2003.8.4.

PRODUCT REVISED
as complying with the Florida
Building Code
Acceptance No 12-0223.45
Expiration Date JUN 14, 2013
By Ishag I. Chanda
Miami Dade Product Control

THESE DOORS ARE RATED FOR SMALL MISSILE IMPACT.
MIAMI-DADE COUNTY APPROVED IMPACT RESISTANT SHUTTERS REQUIRED FOR INSTALLATIONS UP TO 30 FT. OF GRADE.
SHUTTERS NOT REQD. FOR INSTALLATIONS ABOVE 30 FT. OF GRADE.

VERIFY COMPLIANCE WITH EGRESS LIMITATIONS WHERE REQUIRED.

INSUL. LAMINATED GLASS
WET GLAZED

Engr: JAVAD AHMAD
CIVIL
FLA. PE # 70592
C.A.N. 3538

JUN 19 2012

AL-FAROOQ CORPORATION
ENGINEERS & PRODUCT DEVELOPMENT
1235 S.W. 87 AVE
MIAMI, FLORIDA 33174
TEL. (305) 264-8100 FAX. (305) 262-6978

COMP-ANL\W07-26ES

SERIES-6100 ALUM SLIDING GLASS DOOR (S.M.I.)

E.S. WINDOWS, LLC
5220 N.W. 72 AVE. BAY #4
MIAMI, FL. 33166
TEL. (305) 624-7775 FAX. (305) 624-7777

revisions:

no	date	by	description
C	12.01.10		GENERAL REVISION
D	12.27.10		NO CHANGE THIS SHEET
E	07.29.11		NO CHANGE THIS SHEET
F	10.03.11		UPDATED TO 2010 FBC
G	06.18.12		REV. PER PERA COMMENTS

date: 04-04-07
scale: 1/2"=1'-0"
dr. by: HAMID
chk. by:

drawing no.
W07-26

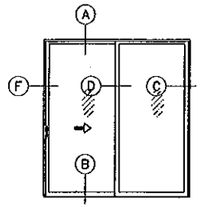

XO (SHOWN)
OX
XX

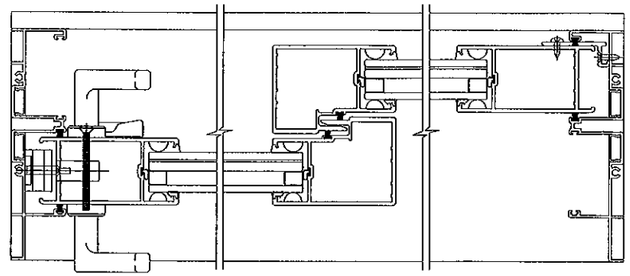

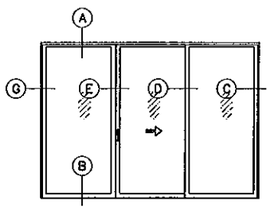

OXO (SHOWN)
XXX

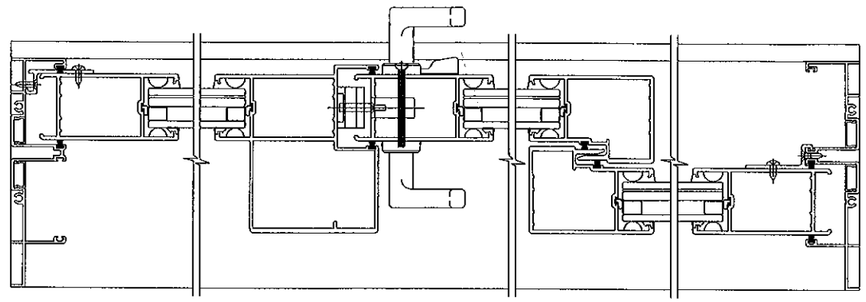

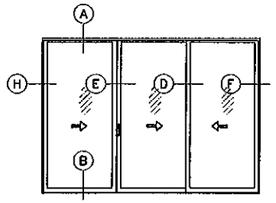

XXX (SHOWN)

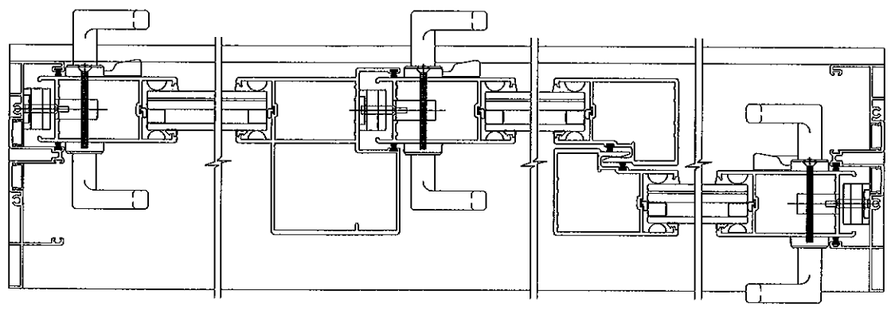

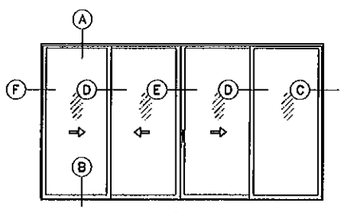

XXXO (SHOWN)
XXXX
OXXO

APPROVED CONFIGURATIONS

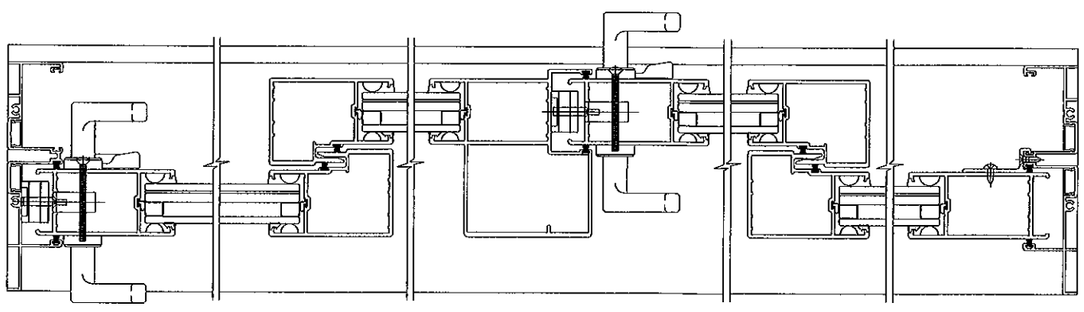

NOTE : OVERALL DOOR WIDTH NOT TO EXCEED 192" FOR 4 PANEL CONFIGURATIONS

NOTE:
FOR REINFORCING AND GLASS OPTIONS
SEE SHEET 3.

PRODUCT REVISED
in complying with the Florida Building Code
Acceptance No 12-0223.45
Expiration Date 6/14/13
By [signature]
Miami Dade Product Control

Engr: JAVAD AHMAD
CIVIL
FLA. PE # 70592
C.A.N. 3538

JUN 19 2012

AL-FAROOQ CORPORATION
ENGINEERS & PRODUCT DEVELOPMENT
1235 S.W. 87 AVE
MIAMI, FLORIDA 33174
TEL. (305) 264-8100 FAX. (305) 262-6978

COMP-ANL\W07-26ES

SERIES-6100 ALUM SLIDING GLASS DOOR (S.M.I.)

E.S. WINDOWS, LLC
5220 N.W. 72 AVE. BAY #4
MIAMI, FL. 33166
TEL. (305) 624-7775 FAX. (305) 624-7777

revisions:

no	date	by	description
C	12.01.10		GENERAL REVISION
D	12.27.10		REV. PER BCCO COMMENTS
E	07.29.11		NO CHANGE THIS SHEET
F	10.03.11		NO CHANGE THIS SHEET
G	06.18.12		REV. PER PERA COMMENTS

date: 04-04-07
scale: -
dr. by: HAMID
chk. by:

drawing no.
W07-26

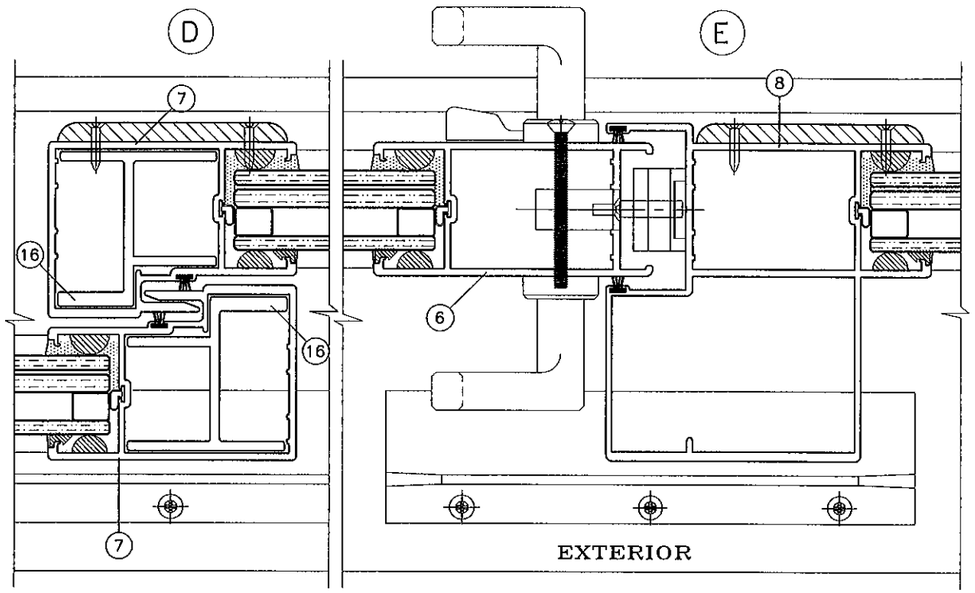

REINFORCING OPTION #3

ALUMINUM REINFORCING AT INTERLOCK

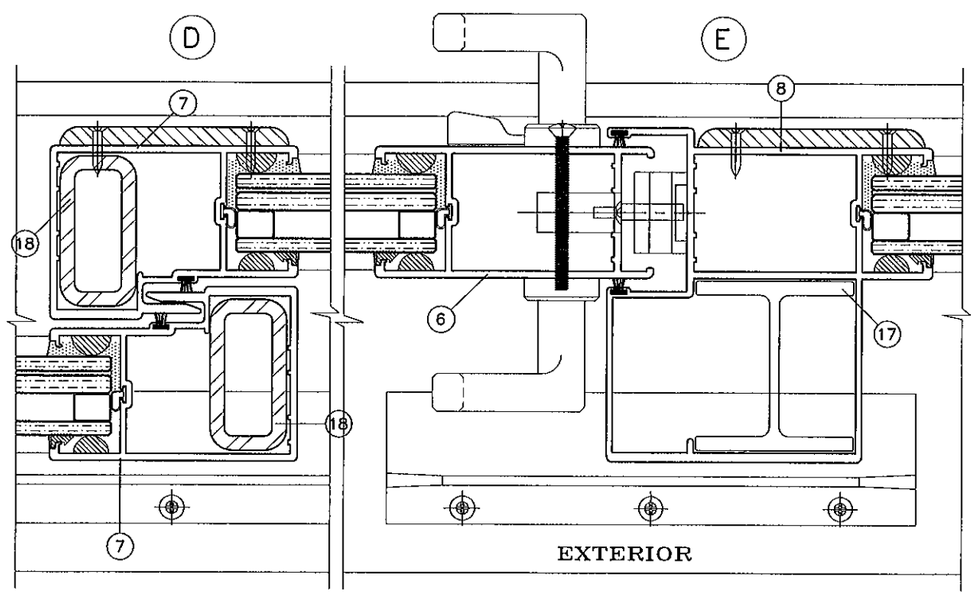

REINFORCING OPTION #4

STEEL REINFORCING AT INTERLOCK
ALUMINUM REINFORCING AT ASTRAGAL

DESIGN LOAD CAPACITY – PSF INSULATED LAMINATED GLASS TYPES 'B' & 'B1'					
PANEL WIDTH NOMINAL INCHES	DOOR HEIGHT INCHES	REINF. OPTION #3		REINF. OPTION #4	
		EXT.(+)	INT.(–)	EXT.(+)	INT.(–)
30	80	85.0	145.0	85.0	145.0
36		85.0	145.0	85.0	145.0
42		85.0	145.0	85.0	145.0
44		85.0	145.0	85.0	145.0
48		85.0	145.0	85.0	145.0
54		–	–	85.0	125.0
60		–	–	85.0	125.0
30	96	85.0	145.0	85.0	145.0
36		85.0	145.0	85.0	145.0
42		–	–	85.0	125.0
44		–	–	85.0	125.0
48		–	–	85.0	125.0
54		–	–	85.0	125.0
60		–	–	85.0	110.0
30	102	85.0	145.0	85.0	145.0
36		85.0	145.0	85.0	145.0
42		–	–	85.0	125.0
44		–	–	85.0	125.0
48		–	–	85.0	125.0
54		–	–	85.0	110.0
30	108	85.0	145.0	85.0	145.0
36		85.0	145.0	85.0	145.0
42		–	–	85.0	125.0
44		–	–	85.0	125.0
48		–	–	85.0	125.0
30	114	–	–	85.0	110.0
36		–	–	85.0	110.0
42		–	–	85.0	110.0
44		–	–	85.0	110.0
48		–	–	85.0	110.0
30	120	–	–	85.0	110.0
36		–	–	85.0	110.0
42		–	–	85.0	110.0
44		–	–	85.0	110.0
48		–	–	85.0	110.0

SEE SHEET 4 FOR GLASS TYPES 'B' & 'B1'

PRODUCT REVISED
in complying with the Florida Building Code
Acceptance No 12-023.45
Expiration Date 6/14/13
By Ishaq I. Uraizi
Miami Dade Product Control

NOTE:
GLASS CAPACITIES ON THIS SHEET ARE BASED ON ASTM E1300–04 (3 SEC. GUSTS) AND FLORIDA BUILDING COMMISSION DECLARATORY STATEMENT DCA05–DEC–219

Engr: JAVAD AHMAD
CIVIL
FLA. PE # 70592
C.A.N. 3538

JUN 19 2012

AL-FAROOQ CORPORATION
ENGINEERS & PRODUCT DEVELOPMENT
1235 S.W. 87 AVE
MIAMI, FLORIDA 33174
TEL (305) 264-8100 FAX. (305) 262-6978

COMP–ANL\W07–26ES

SERIES–6100 ALUM SLIDING GLASS DOOR (S.M.I.)

E.S. WINDOWS, LLC
5220 N.W. 72 AVE. BAY #4
MIAMI, FL. 33166
TEL. (305) 624–7775 FAX. (305) 624–7777

revisions:

no	date	by	description
C	12.01.10		GENERAL REVISION
D	12.27.10		REV. PER BCCO COMMENTS
E	07.29.11		NO CHANGE THIS SHEET
F	10.03.11		NO CHANGE THIS SHEET
G	06.18.12		REV. PER PERA COMMENTS

date: 04–04–07
scale: 1/2" = 1"
dr. by: HAMID
chk. by:

drawing no.
W07–26

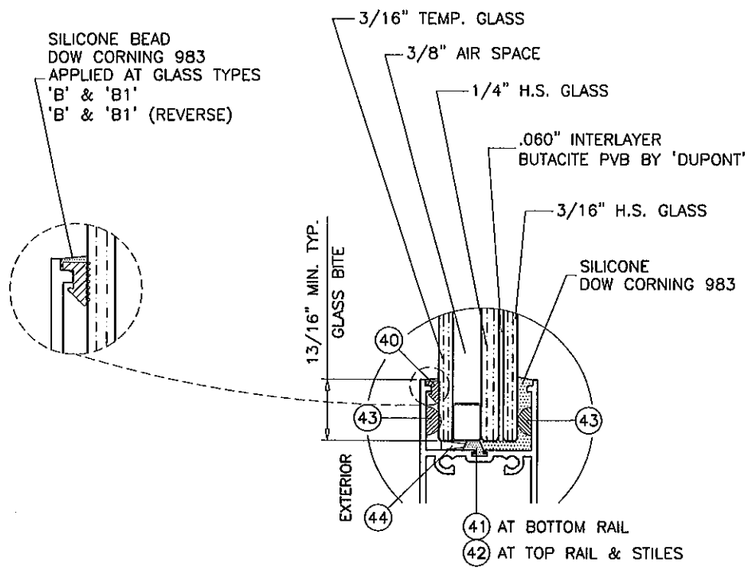

GLASS TYPE 'B'

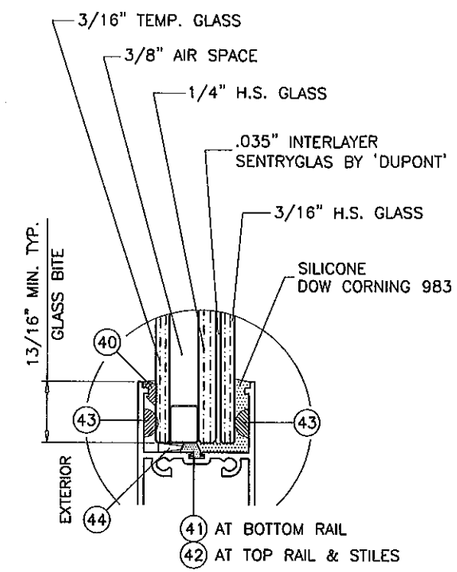

GLASS TYPE 'B1'

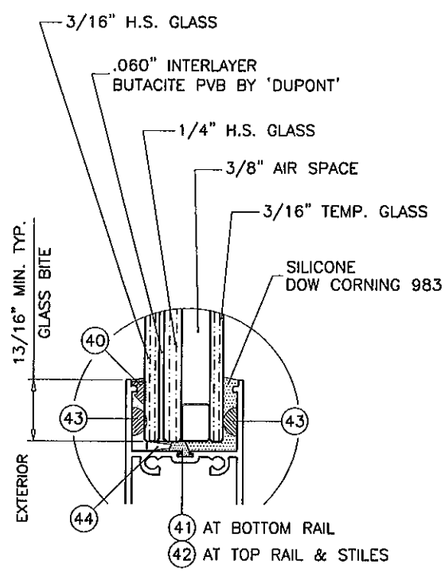

GLASS TYPE 'B' (REVERSE)

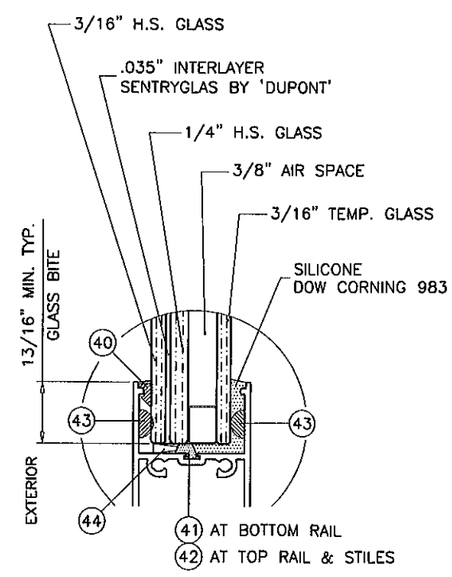

GLASS TYPE 'B1' (REVERSE)

PRODUCT REVISED
as complying with the Florida
Building Code
Acceptance No 12-0223.45
Expiration Date 6/14/13
By Isheg I. Chanak
Miami Dade Product Control

Engr: JAVAD AHMAD
CIVIL
FLA. PE # 70592
C.A.N. 3538

JUN 19 2012

AL-FAROOQ CORPORATION
ENGINEERS & PRODUCT DEVELOPMENT
1235 S.W. 87 AVE
MIAMI, FLORIDA 33174
TEL. (305) 264-8100 FAX. (305) 262-6978

COMP-ANL\W07-26ES

SERIES-6100 ALUM SLIDING GLASS DOOR (S.M.I.)

E.S. WINDOWS, LLC
5220 N.W. 72 AVE. BAY #4
MIAMI, FL. 33166
TEL. (305) 624-7775 FAX. (305) 624-7777

revisions:

no	date	by	description
C	12.01.10		GENERAL REVISION
D	12.27.10		NO CHANGE THIS SHEET
E	07.29.11		NO CHANGE THIS SHEET
F	10.03.11		NO CHANGE THIS SHEET
G	06.18.12		REV. PER PERA COMMENTS

date: 04-04-07
scale: 1/2" = 1"
dr. by: HAMID
chk. by:

drawing no.
W07-26

sheet 4 of 12

TYPICAL ANCHORS: SEE ELEV. FOR SPACING

AT HEAD

TYPE 'A'– 1/4" DIA. ULTRACON BY 'ELCO' (Fu=177 KSI, Fy=155 KSI)
INTO 2BY WOOD BUCKS OR WOOD STRUCTURES
1–3/8" MIN. PENETRATION INTO WOOD

THRU 1BY BUCKS INTO CONCRETE
1–1/4" MIN. EMBED INTO CONCRETE

TYPE 'A1'– 5/16" DIA. ULTRACON BY 'ELCO' (Fu=177 KSI, Fy=155 KSI)
INTO 2BY WOOD BUCKS OR WOOD STRUCTURES
1–3/8" MIN. PENETRATION INTO WOOD

THRU 1BY BUCKS INTO CONCRETE
1–1/4" MIN. EMBED INTO CONCRETE

TYPE 'B'– 1/4" DIA. ULTRACON BY 'ELCO' (Fu=177 KSI, Fy=155 KSI)
DIRECTLY INTO CONCRETE
1–3/8" MIN. EMBED

TYPE 'C'– #14 SMS OR SELF DRILLING SCREWS (GRADE 2 CRS)
INTO MIAMI–DADE COUNTY APPROVED MULLIONS (1/8" THK. MIN.)
INTO METAL STRUCTURES
STEEL : 12 GA. MIN. (Fy = 36 KSI MIN.)
ALUMINUM : 1/8" THK. MIN. (6063–T5 MIN.)
(STEEL IN CONTACT WITH ALUMINUM TO BE PLATED OR PAINTED)

AT SILL

TYPE 'B'– 1/4" DIA. ULTRACON BY 'ELCO' (Fu=177 KSI, Fy=155 KSI)
DIRECTLY INTO CONCRETE
1–3/4" MIN. EMBED

AT JAMBS

TYPE 'A'– 1/4" DIA. ULTRACON BY 'ELCO' (Fu=177 KSI, Fy=155 KSI)
INTO 2BY WOOD BUCKS OR WOOD STRUCTURES
1–3/8" MIN. PENETRATION INTO WOOD

THRU 1BY BUCKS INTO CONC. OR MASONRY
1–1/4" MIN. EMBED INTO CONC. OR MASONRY

TYPE 'B'– 1/4" DIA. ULTRACON BY 'ELCO' (Fu=177 KSI, Fy=155 KSI)
DIRECTLY INTO CONC. OR MASONRY
1–1/4" MIN. EMBED INTO CONC. OR MASONRY

TYPE 'C'– #14 SMS OR SELF DRILLING SCREWS (GRADE 2 CRS)
INTO MIAMI–DADE COUNTY APPROVED MULLIONS (1/8" THK. MIN.)
INTO METAL STRUCTURES
STEEL : 12 GA. MIN. (Fy = 36 KSI MIN.)
ALUMINUM : 1/8" THK. MIN. (6063–T5 MIN.)
(STEEL IN CONTACT WITH ALUMINUM TO BE PLATED OR PAINTED)

ANCHOR EDGE DISTANCES

INTO CONCRETE = 2–1/2" MIN.
INTO WOOD STRUCTURE = 1" MIN.
INTO METAL STRUCTURE = 3/4" MIN.

CONCRETE AT HEAD, SILL OR JAMBS f'c = 3000 PSI MIN.
C–90 HOLLOW/FILLED BLOCK AT JAMBS f'm = 2000 PSI MIN.

DESIGN LOAD CAPACITY – PSF (HEAD ANCHORS)

PANEL WIDTH NOMINAL INCHES	DOOR HEIGHT INCHES	ANCHOR TYPE 'A' EXT. (+) INT. (–)	ANCHORS TYPE 'A1', 'B' & 'C' EXT. (+) INT. (–)
30	80	145.0	145.0
36		145.0	145.0
42		145.0	145.0
44		145.0	145.0
48		145.0	145.0
50		145.0	145.0
54		144.3	145.0
60		137.7	145.0
30	96	145.0	145.0
36		145.0	145.0
42		131.1	145.0
44		126.8	145.0
48		119.5	145.0
50		116.3	145.0
54		110.8	141.4
60		104.3	133.1
30	102	145.0	145.0
36		136.6	145.0
42		121.4	145.0
44		117.3	145.0
48		110.3	140.8
50		107.3	136.9
54		102.0	130.1
30	108	145.0	145.0
36		127.5	145.0
42		113.0	144.2
44		109.1	139.3
48		102.4	130.7
50		99.5	127.0
30	114	139.1	145.0
36		119.5	145.0
42		105.7	134.9
44		102.0	130.2
48		95.6	122.0
50		92.8	118.4
30	120	131.1	145.0
36		112.5	143.5
42		99.3	126.8
44		95.8	122.2
48		89.6	114.4

DESIGN LOAD CAPACITY – PSF (SILL ANCHORS)

PANEL WIDTH NOMINAL INCHES	DOOR HEIGHT INCHES	ANCHOR TYPE 'B' EXT. (+) INT. (–)
30	80	145.0
36		145.0
42		145.0
44		145.0
48		145.0
50		145.0
54		145.0
60		145.0
30	96	145.0
36		145.0
42		145.0
44		145.0
48		145.0
50		144.4
54		137.6
60		129.5
30	102	145.0
36		145.0
42		145.0
44		145.0
48		136.9
50		133.2
54		126.6
30	108	145.0
36		145.0
42		140.3
44		135.5
48		127.1
50		123.5
30	114	145.0
36		145.0
42		131.2
44		126.6
48		118.7
50		115.2
30	120	145.0
36		139.6
42		123.3
44		118.9
48		111.3

PRODUCT REVIEWED
as complying with the Florida
Building Code
Acceptance No. 12-0223.45
Expiration Date 6/14/13
By [illegible]
Miami Dade Product Control

Engr: JAVAD AHMAD
CIVIL
FLA. PE # 70592
C.A.N. 3538

JUN 19 2012

NOTE:
SEE SHEET 3 FOR DESIGN LOAD CAPACITY OF DESIRED GLASS SIZE.
USING CHART ON THIS SHEET SELECT ANCHOR OPTION WITH DESIGN RATING MORE THAN DESIGN LOADS REQUIRED.
LOWER DESIGN PRESSURES FROM GLASS OR HEAD OR SILL ANCHOR CHARTS WILL APPLY TO ENTIRE SYSTEM.

AL-FAROOQ CORPORATION
ENGINEERS & PRODUCT DEVELOPMENT
1235 S.W. 87 AVE
MIAMI, FLORIDA 33174
TEL. (305) 264-8100 FAX. (305) 262-6978
COMP-ANL\W07-26ES

SERIES-6100 ALUM SLIDING GLASS DOOR (S.M.I.)

E.S. WINDOWS, LLC
5220 N.W. 72 AVE. BAY #4
MIAMI, FL. 33166
TEL. (305) 624-7775 FAX. (305) 624-7777

revisions:

no	date	by	description
C	12.01.10		GENERAL REVISION
D	12.27.10		NO CHANGE THIS SHEET
E	07.29.11		NO CHANGE THIS SHEET
F	10.03.11		NO CHANGE THIS SHEET
G	06.18.12		REV. PER PERA COMMENTS

date: 04-04-07
scale: 1/2" = 1"
dr. by: HAMID
chk. by:

drawing no.
W07-26

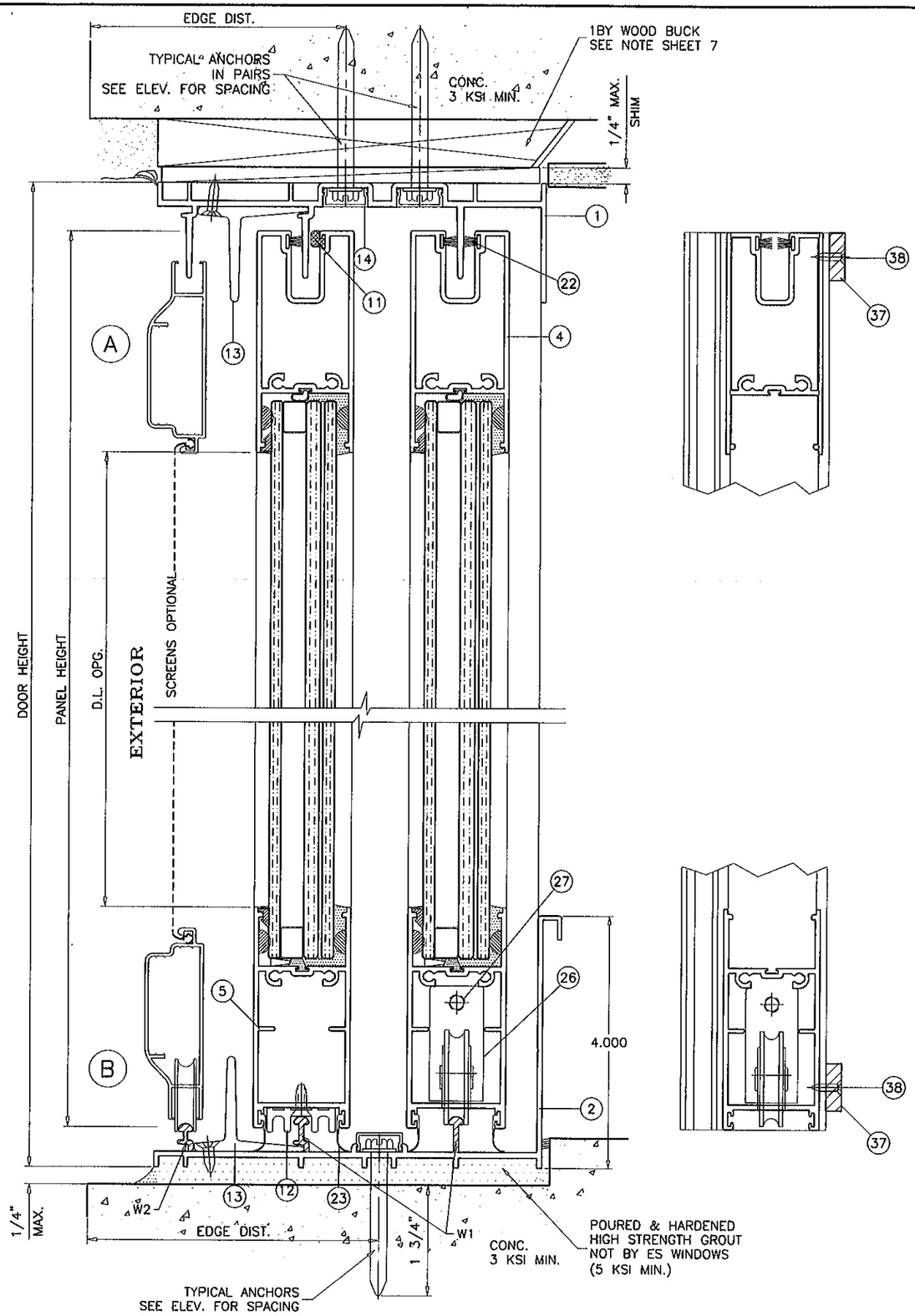

SEALANT:

ALL JOINTS AND FRAME CONNECTIONS SEALED WITH WHITE/ALUMINUM COLORED SILICONE.

WEEPHOLES:

W1 = 2-5/8" LONG WEEP NOTCH AT EACH END
W2 = 1" LONG WEEP NOTCH AT EACH END

PRODUCT REVISED
as complying with the Florida Building Code
Acceptance No 12-0223.45
Expiration Date 6/14/13
By Ishag I. Chanda
Miami Dade Product Control

Engr: JAVAD AHMAD
CIVIL
FLA. PE # 70592
C.A.N. 3538

JUN 19 2012

AL-FAROOQ CORPORATION
ENGINEERS & PRODUCT DEVELOPMENT
1235 S.W. 87 AVE
MIAMI, FLORIDA 33174
TEL. (305) 264-8100 FAX. (305) 262-6978

COMP-ANL\W07-26ES

SERIES-6100 ALUM SLIDING GLASS DOOR (S.M.I.)

E.S. WINDOWS, LLC
5220 N.W. 72 AVE. BAY #4
MIAMI, FL. 33166
TEL. (305) 624-7775 FAX. (305) 624-7777

revisions:

no	date	by	description
C	12.01.10		GENERAL REVISION
D	12.27.10		REV. PER BCCO COMMENTS
E	07.29.11		NO CHANGE THIS SHEET
F	10.03.11		NO CHANGE THIS SHEET
G	06.18.12		REV. PER PERA COMMENTS

date: 04-04-07
scale: 1/2" = 1"
dr. by: HAMID
chk. by:

drawing no. W07-26

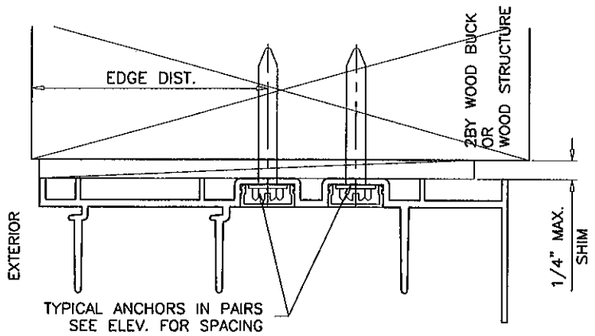

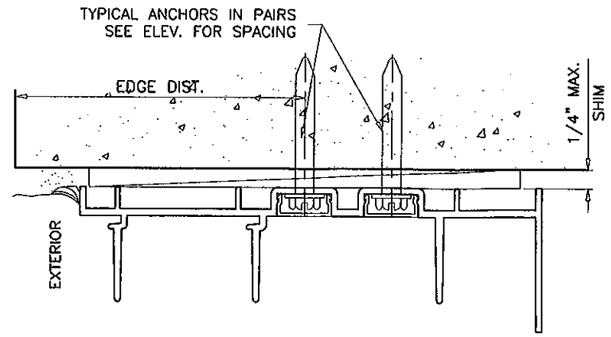

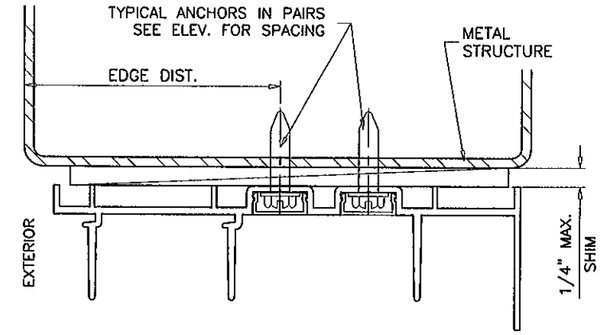

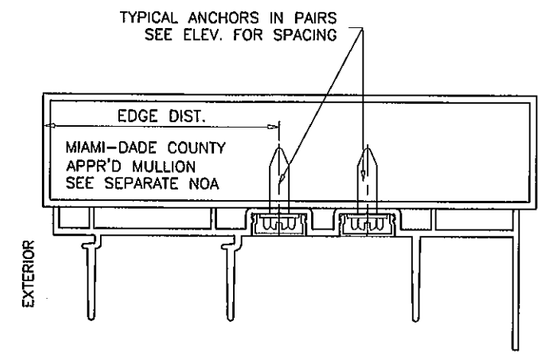

1BY OR 2BY WOOD BUCKS AND METAL STRUCTURES NOT BY E.S. WINDOWS MUST SUPPORT LOADS IMPOSED BY GLAZING SYSTEM AND TRANSFER THEM TO THE BUILDING STRUCTURE.

PRODUCT REVISED
as complying with the Florida Building Code
Acceptance No 12-0223.45
Expiration Date 6/14/13
By [signature]
Miami Dade Product Control

Engr: JAVAD AHMAD
CIVIL
FLA. PE # 70592
C.A.N. 3538

JUN 19 2012

AL-FAROOQ CORPORATION
ENGINEERS & PRODUCT DEVELOPMENT
1235 S.W. 87 AVE
MIAMI, FLORIDA 33174
TEL. (305) 264-8100 FAX. (305) 262-6978

COMP-ANL\W07-26ES

SERIES-6100 ALUM SLIDING GLASS DOOR (S.M.I.)

E.S. WINDOWS, LLC
5220 N.W. 72 AVE. BAY #4
MIAMI, FL. 33166
TEL. (305) 624-7775 FAX. (305) 624-7777

revisions:

no	date	by	description
C	12.01.10		GENERAL REVISION
D	12.27.10		NO CHANGE THIS SHEET
E	07.29.11		NO CHANGE THIS SHEET
F	10.03.11		NO CHANGE THIS SHEET
G	06.18.12		REV. PER PERA COMMENTS

date: 04-04-07
scale: 1/2" = 1"
dr. by: HAMID
chk. by:

drawing no.
W07-26

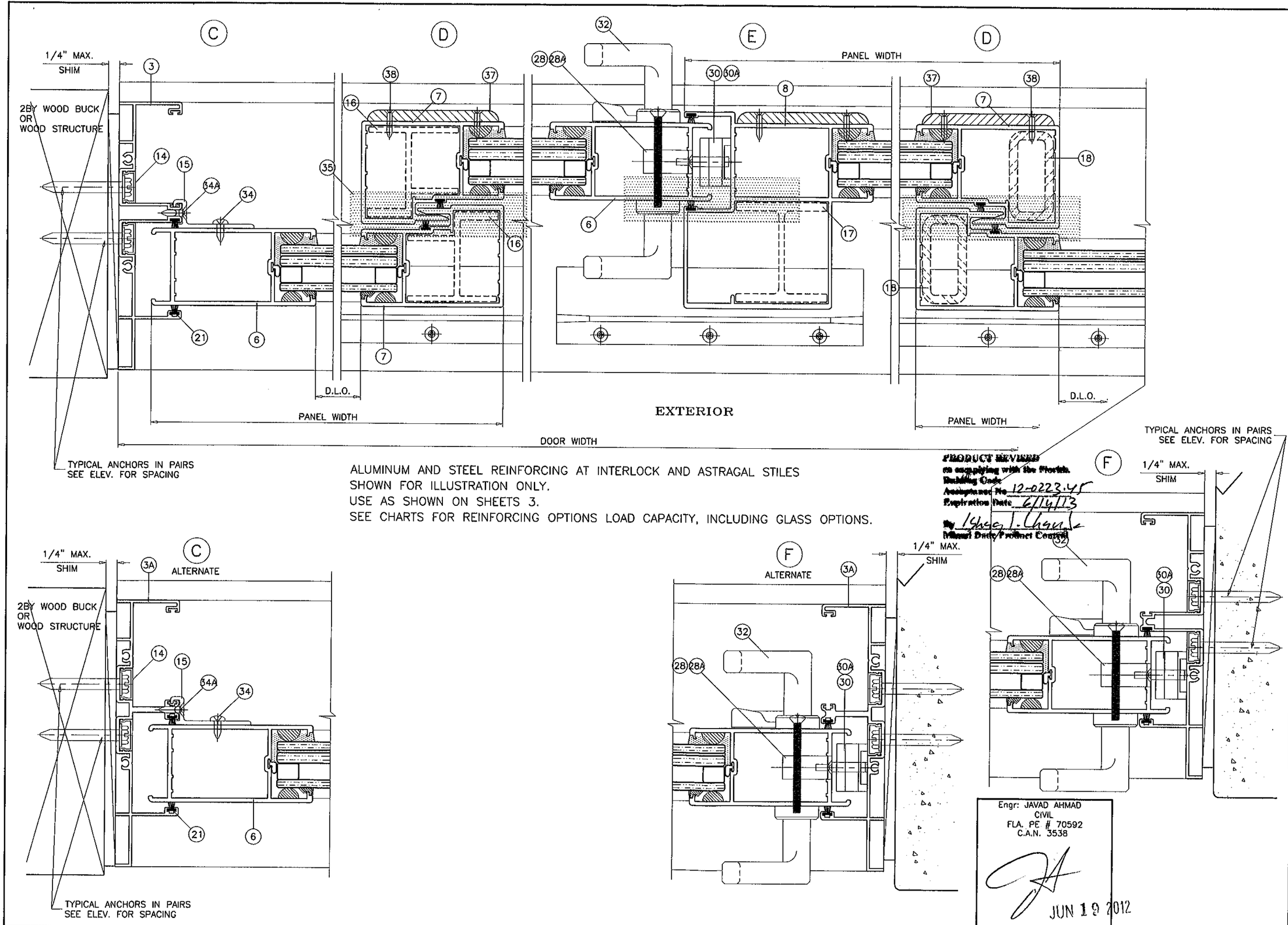

ALUMINUM AND STEEL REINFORCING AT INTERLOCK AND ASTRAGAL STILES
SHOWN FOR ILLUSTRATION ONLY.
USE AS SHOWN ON SHEETS 3.
SEE CHARTS FOR REINFORCING OPTIONS LOAD CAPACITY, INCLUDING GLASS OPTIONS.

PRODUCT REVIEWED
as complying with the Florida
Building Code
Acceptance No. 12-0223.45
Expiration Date 6/14/13
By [signature]
Miami Dade Product Control

Engr: JAVAD AHMAD
CIVIL
FLA. PE # 70592
C.A.N. 3538

JUN 19 2012

afc

AL-FAROOQ CORPORATION
ENGINEERS & PRODUCT DEVELOPMENT
1235 S.W. 87 AVE
MIAMI, FLORIDA 33174
TEL. (305) 264-8100 FAX. (305) 262-6978
COMP-ANL\W07-26ES

SERIES-6100 ALUM SLIDING GLASS DOOR (S.M.I.)

E.S. WINDOWS, LLC
5220 N.W. 72 AVE. BAY #4
MIAMI, FL. 33166
TEL. (305) 624-7775 FAX. (305) 624-7777

revisions:

no	date	by	description
C	12.01.10		GENERAL REVISION
D	12.27.10		REV. PER BCCO COMMENTS
E	07.29.11		ALT. JAMB ADDED
F	10.03.11		NO CHANGE THIS SHEET
G	06.18.12		REV. PER PERA COMMENTS

date: 04-04-07
scale: 1/2" = 1"
dr. by: HAMID
chk. by:

drawing no.
W07-26

sheet 8 of 12

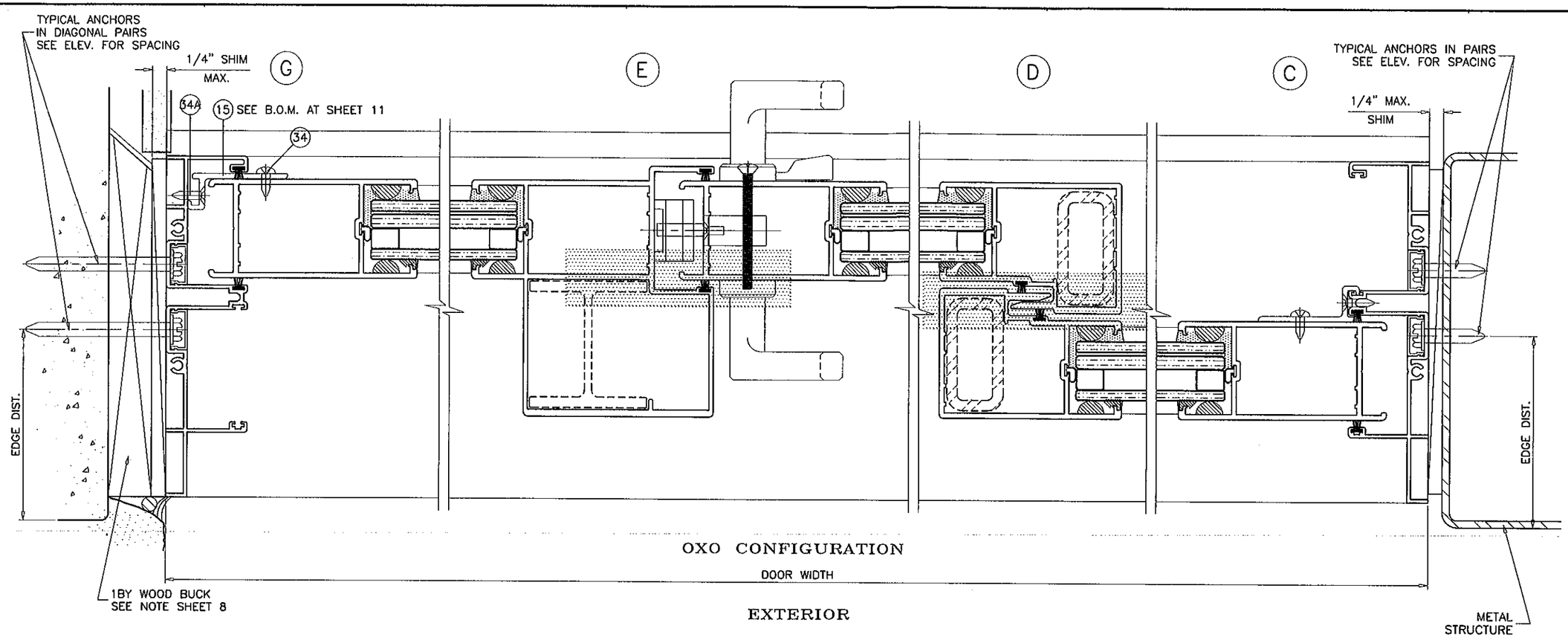

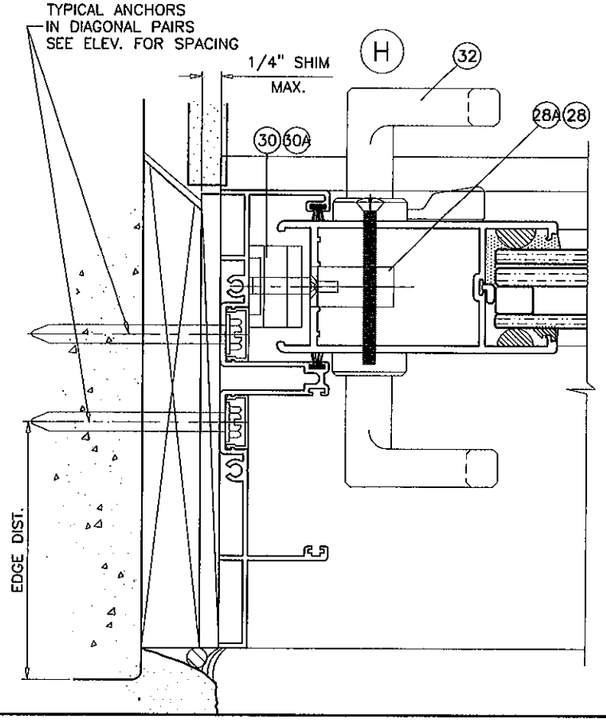

PRODUCT REVISED
as complying with the Florida
Building Code
Acceptance No. 12-0223.45
Expiration Date 6/14/13
By Shaq I. Chang
Miami Dade Product Control

ALUMINUM AND STEEL REINFORCING AT INTERLOCK AND ASTRAGAL STILES
SHOWN FOR ILLUSTRATION ONLY.
USE AS SHOWN ON SHEET 3.
SEE CHARTS FOR REINFORCING OPTIONS LOAD CAPACITY, INCLUDING GLASS OPTIONS.

Engr: JAVAD AHMAD
CIVIL
FLA. PE # 70592
C.A.N. 3538

JUN 19 2012

AL-FAROOQ CORPORATION
ENGINEERS & PRODUCT DEVELOPMENT
1235 S.W. 87 AVE
MIAMI, FLORIDA 33174
TEL. (305) 264-8100 FAX. (305) 262-6978

COMP-ANL\W07-26ES

SERIES-6100 ALUM SLIDING GLASS DOOR (S.M.I.)

E.S. WINDOWS, LLC
5220 N.W. 72 AVE. BAY #4
MIAMI, FL. 33166
TEL. (305) 624-7775 FAX. (305) 624-7777

revisions:

no	date	by	description
C	12.01.10		GENERAL REVISION
D	12.27.10		REV. PER BCCO COMMENTS
E	07.29.11		NO CHANGE THIS SHEET
F	10.03.11		NO CHANGE THIS SHEET
G	06.18.12		REV. PER PERA COMMENTS

date: 04-04-07
scale: 1/2" = 1"
dr. by: HAMID
chk. by:

drawing no.
W07-26

ITEM #	PART #	QUANTITY	DESCRIPTION	MATERIAL	MANF./SUPPLIER/REMARKS
1	ES6001	1	FRAME HEAD	6005-T5	-
2	ES6023	1	FRAME SILL - 4"	6005-T5	-
3	ES6003	2	FRAME JAMB	6063-T6	-
3A	ES6030	2	ALTERNATE FRAME JAMB	6063-T6	-
4	ES6004	2/ PANEL	TOP RAIL	6063-T6	-
5	ES6005	2/ PANEL	BOTTOM RAIL	6063-T6	-
6	ES6006	AS REQD.	LOCK STILE	6063-T6	-
7	ES6007	AS REQD.	INTERLOCK	6063-T6	-
8	ES6008	AS REQD.	FEMALE ASTRAGAL	6063-T6	-
11	ES6016	4/ PANEL	PANEL GUIDE (TOP ONLY)	CELCON	-
12	ES6015	2/ PANEL	FIXED PANEL BOTTOM GUIDE	6063-T6	SECURE W/ (2) #8 X 3/4" FH SMS
13	ES6010	2/ PANEL	RETAINER CLIP, 6" LONG	6005-T5	AT MTG. RAIL HEAD & SILL ENDS
14	ES6011	2/ JAMB	JAMB SCREW COVER	6063-T5	OPTIONAL
15	ES6014	3/ FIX. PANEL	FIXED PANEL CLIP, 4" LONG	6063-T6	AT 7" FROM EACH END AND AT MIDSPAN
16	ES6012	AS REQD.	INTERLOCK STIFFENER (LENGTH = PANEL HT. - 2-3/8")	6063-T6	-
17	ES6013	AS REQD.	ASTRAGAL STIFFENER (LENGTH = PANEL HT. - 2-3/8")	6063-T6	-
18	1" X 2" X 3/16"	AS REQD.	STEEL TUBE REINFORCING (LENGTH = PANEL HT. - 2-3/8")	A36 STEEL	TO BE PAINTED
21	W222521K	AS REQD.	STILE & JAMB W'STRIPPING	-	ULTRAFAB
22	W223221K	AS REQD.	TOP RAIL W'STRIPPING	-	ULTRAFAB
23	ES6027	AS REQD.	BOTTOM RAIL W'STRIPPING	EPDM	DUROMETER 75±4 SHORE A
24	#10 X 1-1/2" PH SMS	8/ PANEL	PANEL ASSY SCREWS	-	-
25	#10 X 1" PH SMS	2/ CORNER	FRAME ASSY SCREWS	-	-
26	1939-7585-55	2/ MOV. PANEL	GLASS PANEL ROLLER ASSY.	ST. STEEL	1-1/4" O.D. WHEELS
27	1/4-20 X 1-3/4" PH MS	1/ ROLLER	ROLLER INST. SCREWS	-	-
28	2300-10SS	1/ MOV. PANEL	STD. MORTISE LOCK, AT 48-1/2" FROM BOTTOM	ST. STEEL	-
28A	2468T-00	1/ MOV. PANEL	MULTI POINT MORTISE LOCK, AT 48-1/2" FROM BOTTOM	ST. STEEL	WITH 2448 TRIM PLATE
29	#10-24 X 3/8" PH MS	2/ LOCK	LOCK INSTALLATION SCREW	ST. STEEL	-
30	ES6017-1	1/ LOCK	LOCK KEEPER (STD. LOCK)	PLATED STEEL	AT 48-1/2" FROM BOTTOM
30A	2447-00	1/ LOCK	LOCK KEEPER (MULTI POINT LOCK)	ST. STEEL	AT 48-1/2" FROM BOTTOM
31	#10 X 5/8" PH SMS B	2/ LOCK	LOCK KEEPER MOUNT. SCREW (STD. LOCK)	ST. STEEL	-
31A	#8 X 3/4" FH SMS	4/ LOCK	LOCK KEEPER MOUNT. SCREW (MULTI POINT LOCK)	ST. STEEL	-
32	#623Z	1/ LOCK	INTERIOR AND EXTERIOR PULL	-	(3) #6-32 X 1/2" FH MS, ST. STEEL
34	#10 X 3/4" PH SDS	2/ CLIP	FIXED PANEL CLIP FASTENER	ST. STEEL	-
34A	#10 X 3/4" PH SDS	2/ CLIP	FIXED PANEL CLIP FASTENER	ST. STEEL	-
35	-	AS REQD.	1"X4" LONG SELF ADHESIVE PILE PAD	WOOLPILE	AT HEAD AND SILL
37	ES6019	AS REQD.	RESTRAINING PLATE	NYLON	AT TOP & BOTT. INTERLOCKS & ASTRAGAL
38	#8 X 3/4" FH SMS	2/ PLATE	RESTRAINING PLATE FASTENER	-	-
40	ES6028	AS REQD.	GLAZING WEDGE	-	-
41	ES4014	AS REQD.	BOTTOM RAIL GLASS STOP	EPDM	DUROMETER 68±4 SHORE A
42	ES4018	AS REQD.	TOP RAIL & STILES GLASS STOP	EPDM	DUROMETER 75±4 SHORE A
43	-	AS REQD.	BUMPER	SILICONE	-
44	-	2/ LITE	SETTING BLOCK, 1" X 1/8" X 2-1/2" LONG	EPDM	DUROMETER 75±4 SHORE A

LATCHES:
ITEMS 28A AND 30A USED FOR DOORS WITH STEEL REINFORCING ONLY
ITEMS 28 AND 30 USED FOR ALL OTHER DOORS.

PRODUCT REVISED
in complying with the Florida
Building Code
Acceptance No 12-0223.45
Expiration Date 6/14/13
By Shaq J. Chang
Miami Dade Product Control

Engr: JAVAD AHMAD
CIVIL
FLA. PE # 70592
C.A.N. 3538

JUN 19 2012

AL-FAROOQ CORPORATION
ENGINEERS & PRODUCT DEVELOPMENT
1235 S.W. 87 AVE
MIAMI, FLORIDA 33174
TEL. (305) 264-8100 FAX. (305) 262-6978

COMP-ANL\W07-26ES

SERIES-6100 ALUM SLIDING GLASS DOOR (S.M.I.)

E.S. WINDOWS, LLC
5220 N.W. 72 AVE. BAY #4
MIAMI, FL. 33166
TEL. (305) 624-7775 FAX. (305) 624-7777

revisions:

no	date	by	description
C	12.01.10		GENERAL REVISION
D	12.27.10		NO CHANGE THIS SHEET
E	07.29.11		ALT. JAMB ADDED
F	10.03.11		NO CHANGE THIS SHEET
G	06.18.12		REV. PER PERA COMMENTS

date: 04-04-07
scale: 1/2" = 1"
dr. by: HAMID
chk. by:

drawing no.
W07-26

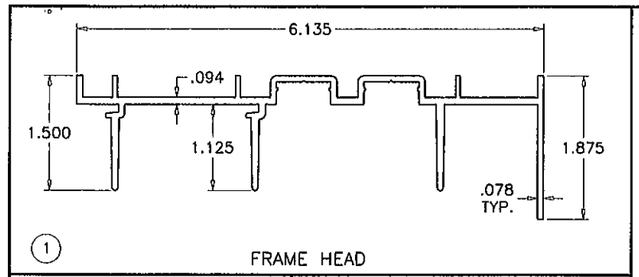

1 FRAME HEAD

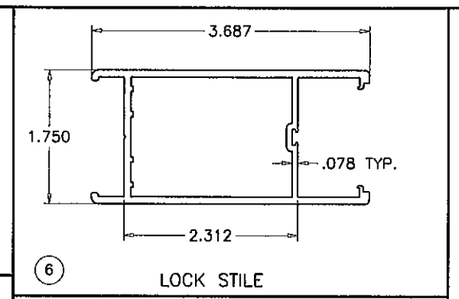

6 LOCK STILE

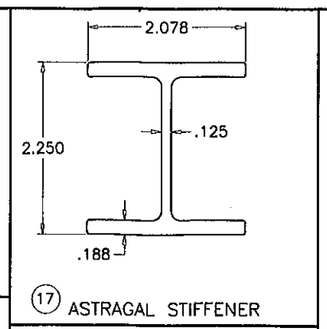

17 ASTRAGAL STIFFENER

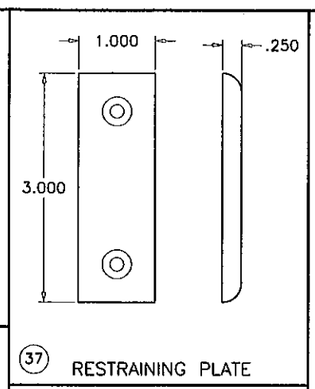

37 RESTRAINING PLATE

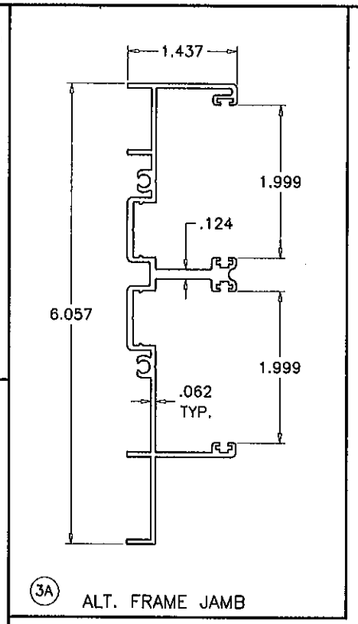

3A ALT. FRAME JAMB

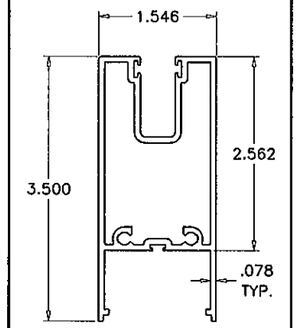

4 PANEL TOP RAIL

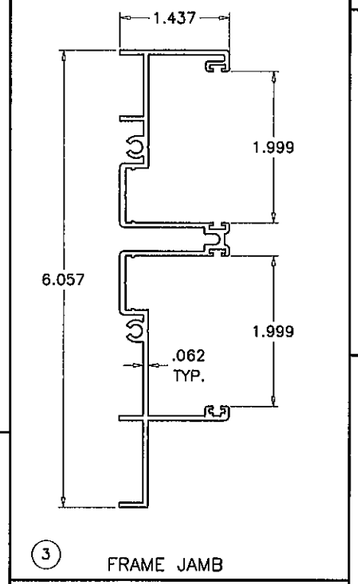

3 FRAME JAMB

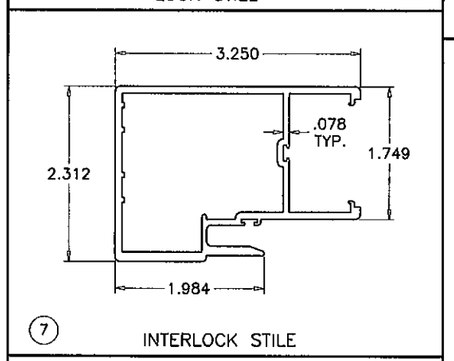

7 INTERLOCK STILE

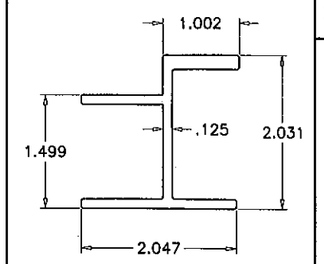

16 INTERLOCK STIFFENER

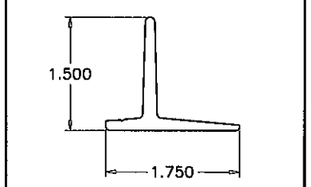

13 RETAINER CLIP

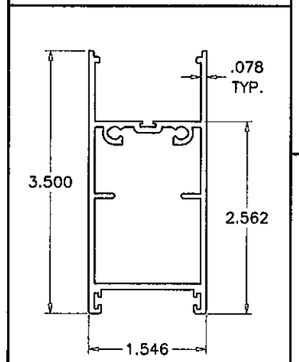

5 PANEL BOTTOM RAIL

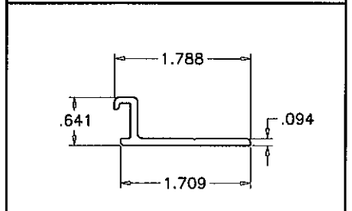

15 FIXED PANEL CLIP

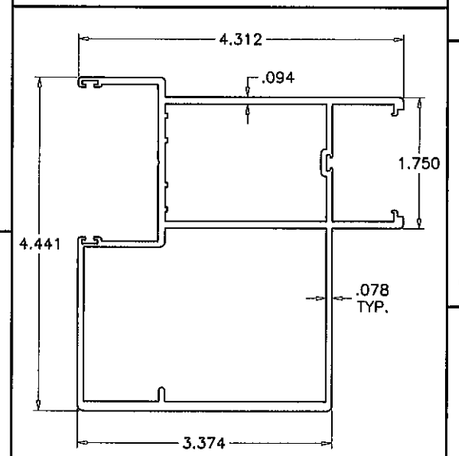

8 ASTRAGAL STILE

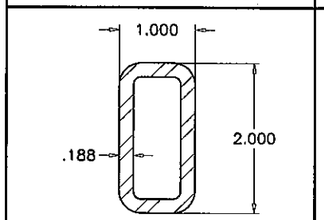

18 INTERLOCK REINFORCING

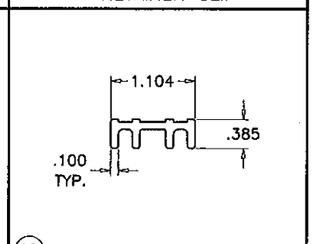

12 FIX. PANEL BOTTOM GUIDE

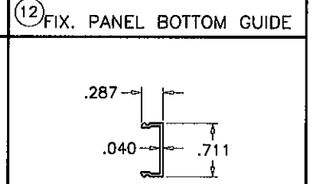

14 SCREW COVER

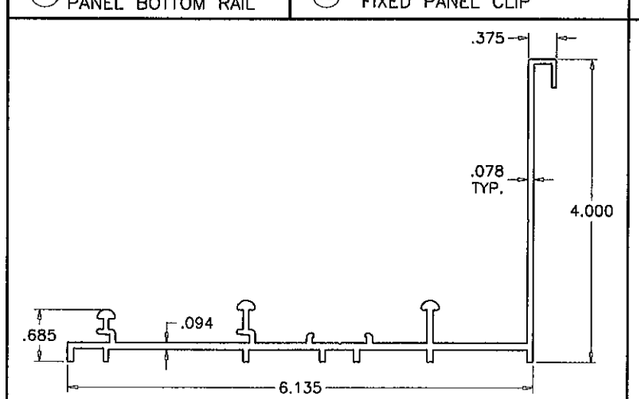

2 FRAME SILL

PRODUCT REVISED
in complying with the Florida Building Code
Acceptance No. 12-0223.45
Expiration Date 6/14/13
By Ishag I. Chang
Miami Dade Product Control

Engr: JAVAD AHMAD
CIVIL
FLA. PE # 70592
C.A.N. 3538

JUN 19 2012

AL-FAROOQ CORPORATION
ENGINEERS & PRODUCT DEVELOPMENT
1235 S.W. 87 AVE
MIAMI, FLORIDA 33174
TEL. (305) 264-8100 FAX. (305) 262-6978

COMP-ANL\W07-26ES

SERIES-6100 ALUM SLIDING GLASS DOOR (S.M.I.)

E.S. WINDOWS, LLC
5220 N.W. 72 AVE. BAY #4
MIAMI, FL. 33166
TEL. (305) 624-7775 FAX. (305) 624-7777

revisions:

no	date	by	description
C	12.01.10		GENERAL REVISION
D	12.27.10		NO CHANGE THIS SHEET
E	07.29.11		ALT. JAMB ADDED
F	10.03.11		NO CHANGE THIS SHEET
G	06.18.12		REV. PER PERA COMMENTS

date: 04-04-07
scale: 1/2" = 1"
dr. by: HAMID
chk. by:

drawing no.
W07-26

sheet 11 of 12

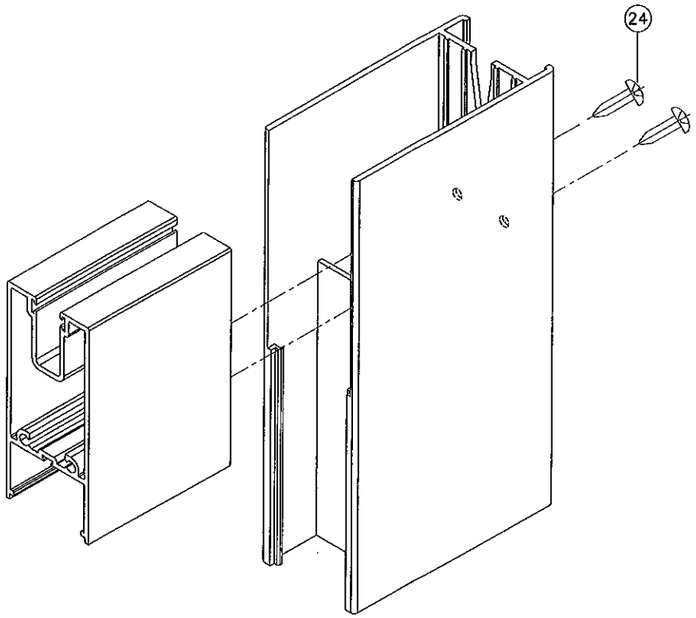

PANEL TOP CORNER

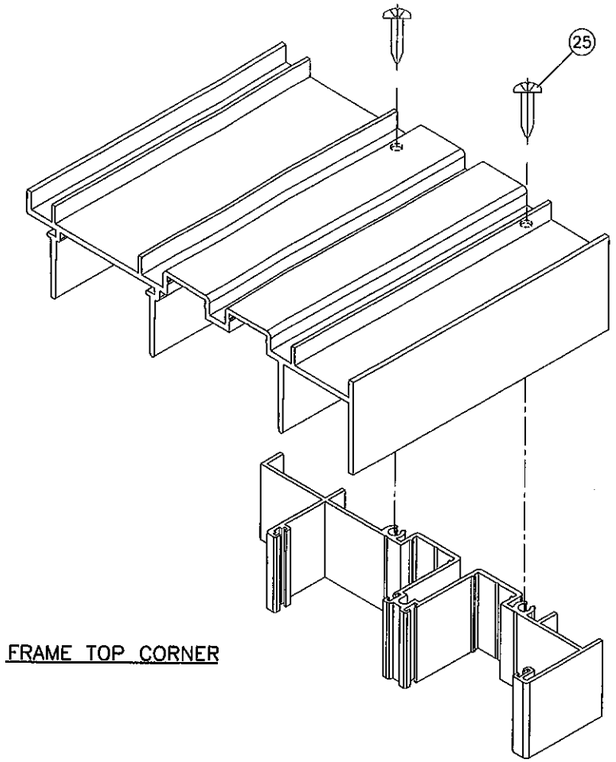

FRAME TOP CORNER

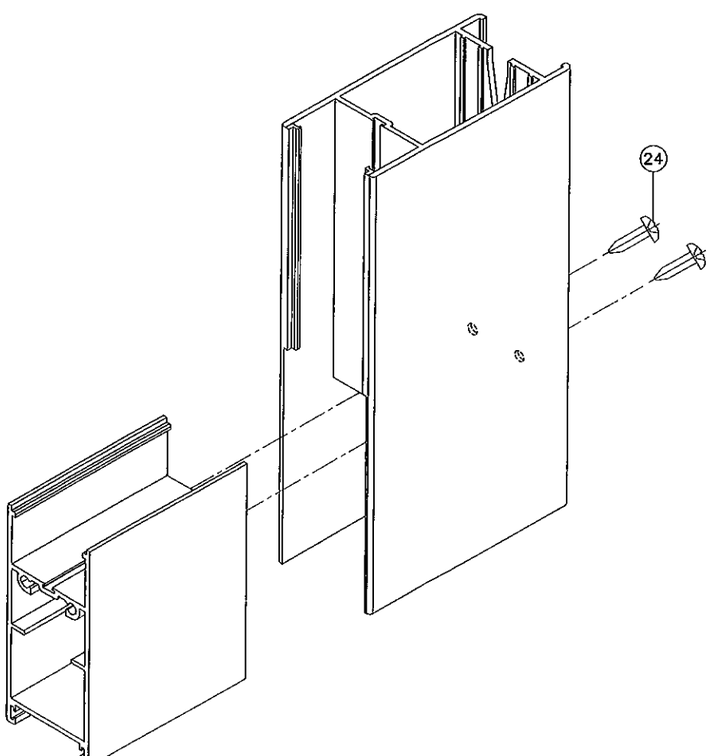

PANEL BOTTOM CORNER

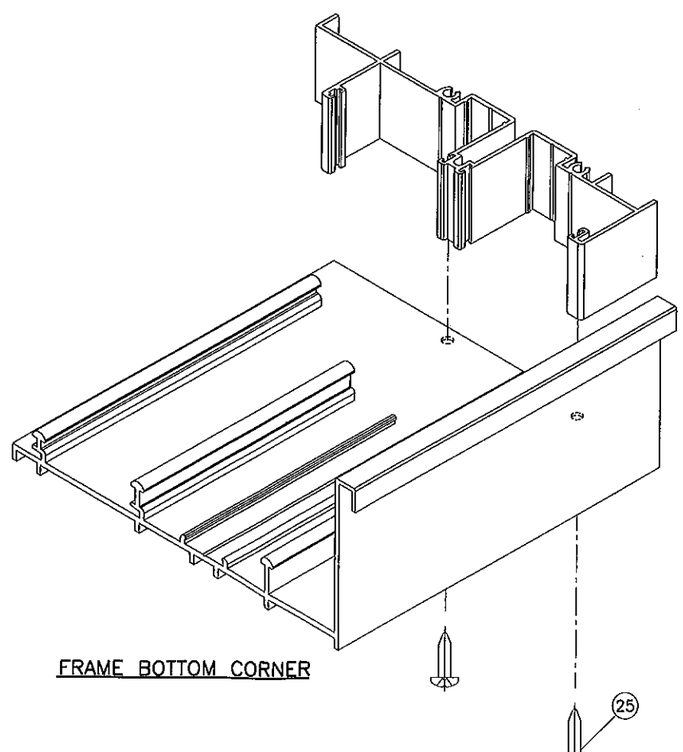

FRAME BOTTOM CORNER

PRODUCT REVISED
in complying with the Florida Building Code
Acceptance No 12-0223.45
Expiration Date JUNE 14 2013
By Ishaq J. Chanda
Miami Dade Product Control

Engr: JAVAD AHMAD
CIVIL
FLA. PE # 70592
C.A.N. 3538

JUN 19 2012

AL-FAROOQ CORPORATION
ENGINEERS & PRODUCT DEVELOPMENT
1235 S.W. 87 AVE
MIAMI, FLORIDA 33174
TEL. (305) 264-8100 FAX. (305) 262-6978

COMP-ANL\W07-26ES

SERIES-6100 ALUM SLIDING GLASS DOOR (S.M.I.)

E.S. WINDOWS, LLC
5220 N.W. 72 AVE. BAY #4
MIAMI, FL. 33166
TEL. (305) 624-7775 FAX. (305) 624-7777

revisions:

no	date	by	description
C	12.01.10		GENERAL REVISION
D	12.27.10		NO CHANGE THIS SHEET
E	07.29.11		NO CHANGE THIS SHEET
F	10.03.11		NO CHANGE THIS SHEET
G	06.18.12		REV. PER PERA COMMENTS

date: 04-04-07
scale: 1/2" = 1"
dr. by: HAMID
chk. by:

drawing no.
W07-26

sheet 12 of 12