MIAMI-DADE COUNTY
DEPARTMENT OF PERMITTING, ENVIRONMENT, AND REGULATORY AFFAIRS (PERA)
BOARD AND CODE ADMINISTRATION DIVISION

MIAMI-DADE COUNTY
PRODUCT CONTROL SECTION
11805 SW 26 Street, Room 208
Miami, Florida 33175-2474
T (786) 315-2590 F (786) 315-2599
www.miamidade.gov/building

NOTICE OF ACCEPTANCE (NOA)

USA Shutter Company, LLC
1455 Rail Head Blvd. Unit 6
Naples, FL 34110

SCOPE:
This NOA is being issued under the applicable rules and regulations governing the use of construction materials. The documentation submitted has been reviewed and accepted by Miami-Dade County PERA-Product Control Section to be used in Miami Dade County and other areas where allowed by the Authority Having Jurisdiction (AHJ).

This NOA shall not be valid after the expiration date stated below. The Miami-Dade County Product Control Section (In Miami Dade County) and/or the AHJ (in areas other than Miami Dade County) reserve the right to have this product or material tested for quality assurance purposes. If this product or material fails to perform in the accepted manner, the manufacturer will incur the expense of such testing and the AHJ may immediately revoke, modify, or suspend the use of such product or material within their jurisdiction. PERA reserves the right to revoke this acceptance, if it is determined by Miami-Dade County Product Control Section that this product or material fails to meet the requirements of the applicable building code.

This product is approved as described herein, and has been designed to comply with the High Velocity Hurricane Zone of the Florida Building Code.

DESCRIPTION: **Aluminum Maestroshield Roll Down Shutter**

APPROVAL DOCUMENT: Drawing **No. 08-00174,** sheets 1 through 10 of 10 and Drawing **No. 08-00214**, sheet 1 of 1, titled "Aluminum Maestroshield Shutter -In-A-Box", prepared by Luis R. Lamas, P.E., last revision #A dated 02/02/12, signed & sealed by Luis R. Lamas, P.E., bearing the Miami-Dade County Product Control Revision stamp with the Notice of Acceptance number and the expiration date by the Miami-Dade County Product Control Section.

MISSILE IMPACT RATING: **Large and Small Missile Impact Resistant**

LABELING: Each unit shall bear a permanent label with the manufacturer's name or logo, city, state, the following statement: "Miami-Dade County Product Control Approved", and NOA number, per TAS-201, TAS-202, and TAS-203, unless otherwise noted herein.

RENEWAL of this NOA shall be considered after a renewal application has been filed and there has been no change in the applicable building code negatively affecting the performance of this product.

TERMINATION of this NOA will occur after the expiration date or if there has been a revision or change in the materials, use, and/or manufacture of the product or process. Misuse of this NOA as an endorsement of any product, for sales, advertising or any other purposes shall automatically terminate this NOA. Failure to comply with any section of this NOA shall be cause for termination and removal of NOA.

ADVERTISEMENT: The NOA number preceded by the words Miami-Dade County, Florida, and followed by the expiration date may be displayed in advertising literature. If any portion of the NOA is displayed, then it shall be done in its entirety.

INSPECTION: A copy of this entire NOA shall be provided to the user by the manufacturer or its distributors and shall be available for inspection at the job site at the request of the Building Official.

This NOA **revises & renews NOA# 07-0711.02,** consists of this page 1, evidence submitted pages E-1 and E-2 as well as approval document mentioned above.

The submitted documentation was reviewed by **Helmy A. Makar, P.E., M.S.**

MIAMI-DADE COUNTY APPROVED

Helmy A. Makar
05/31/2012

NOA No. 12-0224.01
Expiration Date: 02/08/2017
Approval Date: 05/31/2012

USA Shutter Company, LLC

NOTICE OF ACCEPTANCE: EVIDENCE SUBMITTED

1. EVIDENCE SUBMITTED UNDER PREVIOUS APPROVAL #07-0711.02

A. DRAWINGS

1. *Drawing **No. FL 00174** titled "AL MAESTROSHIELD SHUTTER-IN-A-BOX", prepared by Luis R. Lamas, P. E. dated 06/25/07, sheets 1 through 10 of 10 and sheet 1 of 1 signed and sealed by Luis R. Lamas, P. E., on 06/28/07 and 08/26/07.*

B. TESTS

1. *Test report on Uniform Static Air Pressure Test per TAS 202, Test report on Large Missile Impact Test per TAS 201 and Cyclic Wind Pressure Test per TAS 203 of extruded aluminum roll-up shutters, prepared by Fenestration Testing Laboratory, Inc., Report No. 5278, dated 05/29/2007 signed and sealed by Michael Wenzel, P.E..*

C. CALCULATIONS

1. *Calculations, 12 pages dated 07/02/07 and 3 pages dated 06/25/07, signed and sealed by Luis R. Lamas, P.E.*

D. QUALITY ASSURANCE

1. *Miami Dade Building Code Compliance Office (BCCO).*

E. STATEMENTS

1. *Statement letter of compliance with the 2004 Florida Building Code and no Financial Interest dated June 06 2007, signed and sealed by Luis R Lomas, P.E.*

1. EVIDENCE SUBMITTED UNDER PREVIOUS APPROVAL #07-0711.02

A. DRAWINGS

1. *Drawing **No. 08-00174,** sheets 1 through 10 of 10 and Drawing **No. 08-00214**, sheet 1 of 1, titled "Aluminum Maestroshield Shutter -In-A-Box", prepared by Luis R. Lamas, P.E., last revision #A dated 02/02/12, signed & sealed by Luis R. Lamas, P.E.*

B. TESTS

1. *None.*

C. CALCULATIONS

1. *None.*

D. QUALITY ASSURANCE

1. *By Miami Dade County Department of Permitting, Environment, and Regulatory Affairs (PERA).*

Helmy A. Makar, P.E., M.S.
PERA, Product Control Unit Supervisor
NOA No. 12-0224.01
Expiration Date: 02/08/2017
Approval Date: 05/31/2012

NOTICE OF ACCEPTANCE: EVIDENCE SUBMITTED

E. STATEMENTS

1. *Statement letter of compliance with the 2010 Florida Building Code and no Financial Interest dated February 03, 2012, signed and sealed by Luis R Lomas, P.E.*

Helmy A. Makar, P.E., M.S.
PERA, Product Control Unit Supervisor
NOA No. 12-0224.01
Expiration Date: 02/08/2017
Approval Date: 05/31/2012

REVISIONS			
REV	DESCRIPTION	DATE	APPROVED
A	REVISED NOTE 1	02/02/12	R.L.

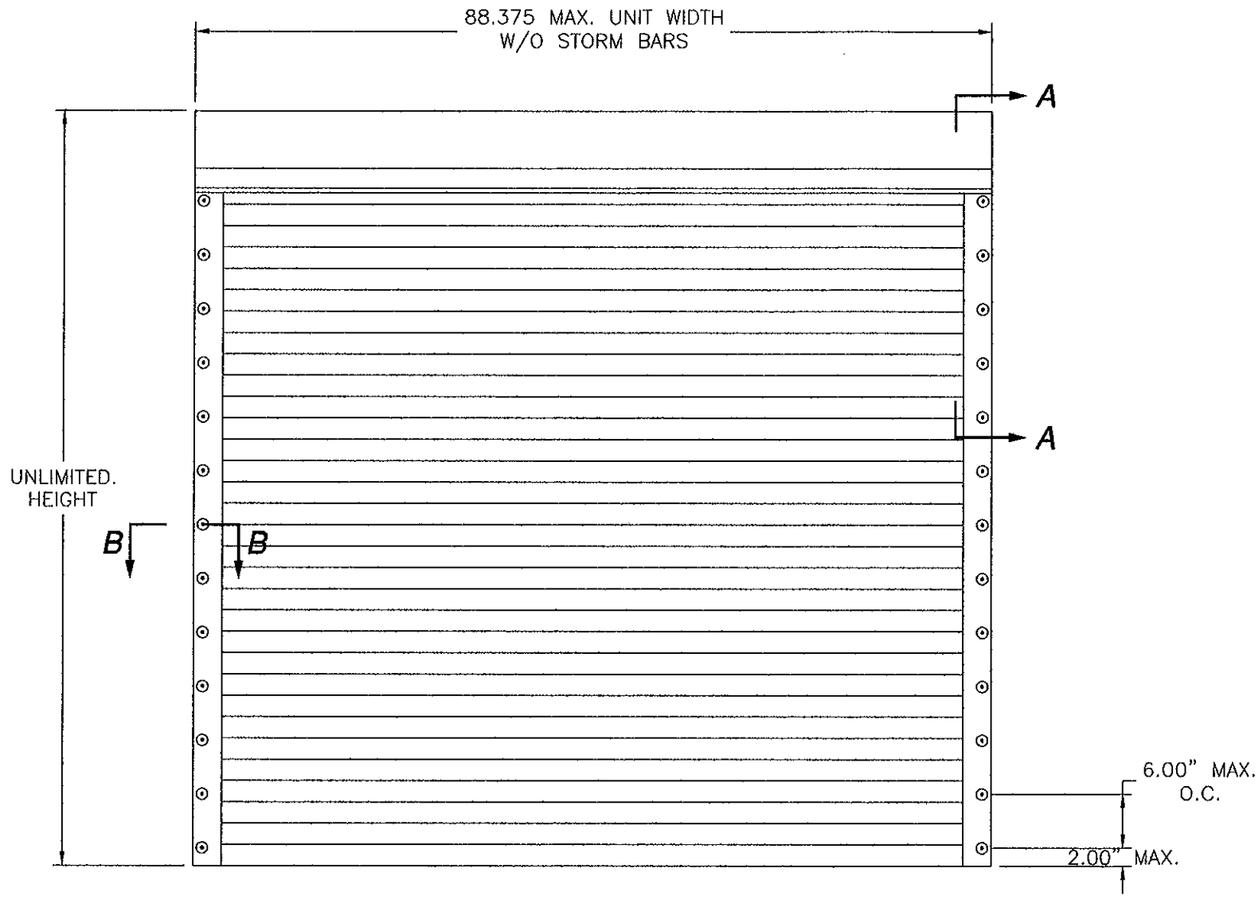

ROLL-UP SHUTTER-IN-A-BOX
EXTERIOR VIEW

NOTES:

1) THE PRODUCT SHOWN HEREIN IS DESIGNED AND MANUFACTURED TO COMPLY WITH THE 2010 FLORIDA BUILDING CODE, INCLUDING THE HVHZ.
2) WOOD FRAMING AND MASONRY OPENING TO BE DESIGNED AND ANCHORED TO PROPERLY TRANSFER ALL LOADS TO STRUCTURE. FRAMING AND MASONRY OPENING IS THE RESPONSIBILITY OF THE ARCHITECT OR ENGINEER OF RECORD.
3) CONTRACTOR IS RESPONSIBLE FOR MAINTAINING STRUCTURAL INTEGRITY OF WINDOW OPENING AND ALL WOOD FRAMING AROUND WINDOW.
4) ALL EXTRUSIONS ARE 6063-T5 ALUMINUM ALLOY, UNLESS OTHERWISE NOTED.
5) ALL FASTENERS, NUTS AND WASHERS SHALL BE GALVANIZED OR STAINLESS STEEL WITH A MINIMUM TENSILE STRENGTH OF 60KSI.
6) APPLICABLE TEST REPORT: CTLA 1606W, CTLA 1609W, HTL 0432-0804-06 AND FTL 5278
7) REFER TO ANCHOR SCHEDULE CHART FOR ANCHOR TYPE, SUBSTRATE TYPE, EDGE DISTANCE AND MINIMUM EMBEDMENT.
8) FOR MINIMUM REQUIRED SEPARATION BETWEEN PRODUCT AND EXISTING GLASS AND RATED DESIGN PRESSURES SEE DESIGN PRESSURE CHART ON SHEET 3.
9) UNITS MAY BE MULLED TOGETHER INDEFINITELY USING APPROVED MULLIONS AS REQUIRED.
10) FOR UNITS WITH STORM BARS SEE CHARTS AND INSTALLATION DETAILS ON SHEET 3.
11) OPERATION OF ROLLUP MECHANISM IS NOT PART OF THIS APPROVAL. CARE SHOULD BE TAKEN WHEN SHUTTER IS IN MOTION ENSURING THAT PERSONAL INJURY OR DAMAGE TO THIS PRODUCT DOES NOT OCCUR.
12) FOR DESIGN PRESSURES FOR UNITS WITHOUT STORM BARS AND WITH OR WITHOUT END RETENTION SYSTEM SEE SHEET 3.
13) SLATS CAN BE INSTALLED WITH EITHER PROFILE FACING THE EXTERIOR.
14) HOOD ASSEMBLY IS IMPACT RATED AND CAN BE PLACED INSIDE FRAME OPENING AS AN EXPOSED FEATURE.

TABLE OF CONTENTS

SHEET NO.	DESCRIPTION
1	ELEVATION ANCHORING AND GENERAL NOTES
2	STORM BAR ELEVATION AND LOCATION
3	B.O.M. AND DESIGN PRESSURE CHARTS
4, 5	INSTALLATION DETAILS
6, 7	ANCHOR CHARTS
8, 9	INSTALLATION DETAILS
10	COMPONENTS

LARGE MISSILE IMPACT RESISTANT

PRODUCT REVISED
as complying with the Florida
Building Code
Acceptance No 12-0224.01
Expiration Date 02/08/2017
By Helen A. [illegible]
Miami Dade Product Control

USA SHUTTER COMPANY LLC
1455 RAIL HEAD BLVD, UNIT 6
NAPLES, FL 34110

ALUMINUM MAESTROSHIELD SHUTTER-IN-A-BOX
ELEVATION, ANCHORING AND NOTES

DRAWN:	DWG NO.	REV
R.L.	08-00174	A
SCALE NTS	DATE 06/25/07	SHEET 1 OF 10

Luis R. Lamas
02/02/12
Luis R. Lamas P.E.
Florida No. 62514

REVISIONS			
REV	DESCRIPTION	DATE	APPROVED
A	REVISED NOTE 1	02/02/12	R.L.

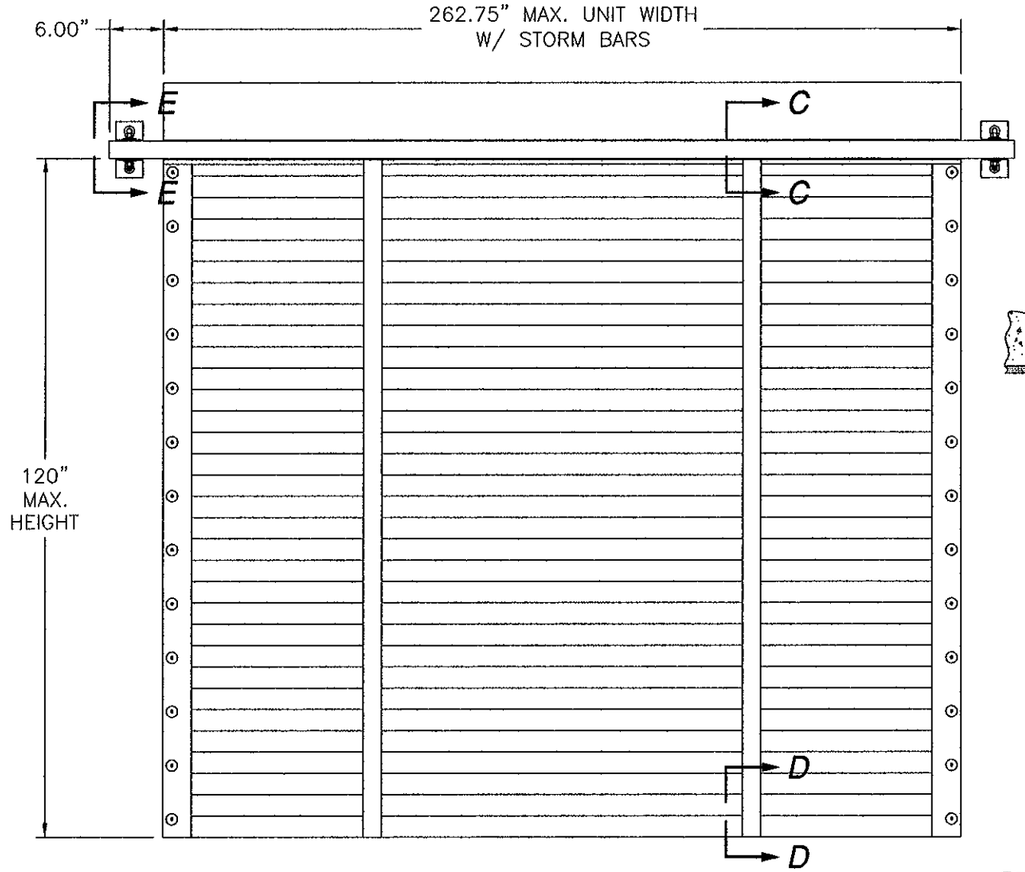

ROLL-UP SHUTTER-IN-A-BOX WITH STORM BARS
EXTERIOR VIEW

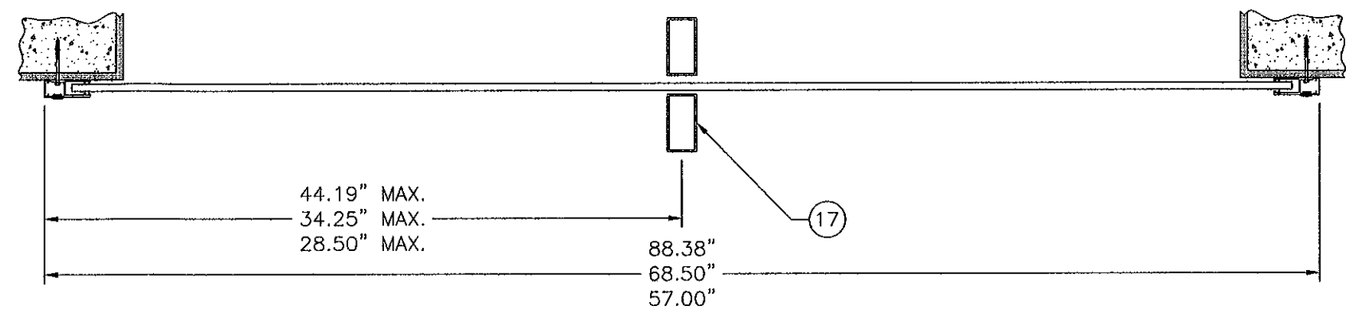

STORM BAR LOCATION
FOR 88.38", 68.50" AND 50.78" WIDE
UNITS WITH ONE STORM BAR

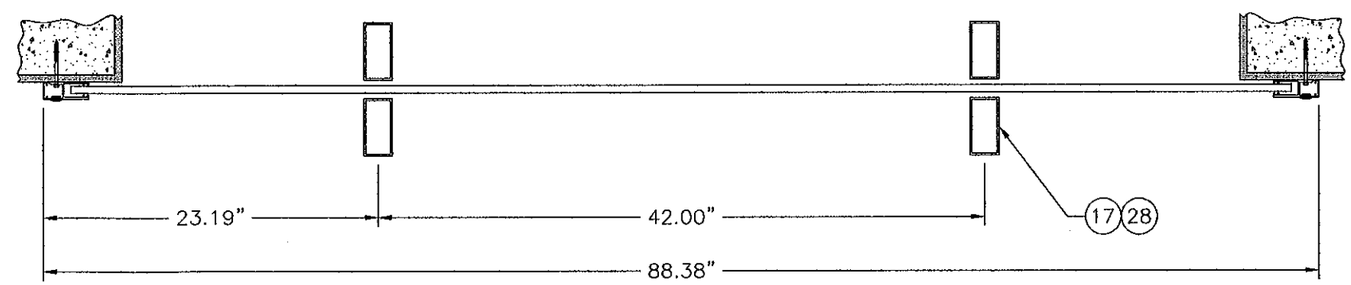

STORM BAR LOCATION
FOR 88.38" WIDE UNITS WITH TWO
STORM BARS

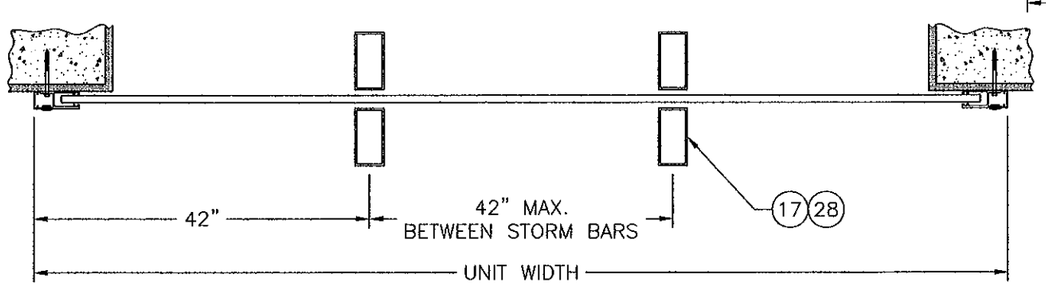

STORM BAR LOCATION
FOR UNITS WIDER THAN 88 3/8"

PRODUCT REVISED
as complying with the Florida
Building Code
Acceptance No 12-0224.01
Expiration Date 02/08/2017
By Helen A. Martin
Miami Dade Product Control

USA SHUTTER COMPANY LLC
1455 RAIL HEAD BLVD, UNIT 6
NAPLES, FL 34110

ALUMINUM MAESTROSHIELD SHUTTER-IN-A-BOX
ELEVATION, ANCHORING AND NOTES

DRAWN:	DWG NO.	REV
R.L.	08-00174	A
SCALE NTS	DATE 06/25/07	SHEET 2 OF 10

Luis R. Lomas 02/02/12
Luis R. Lomas P.E.
Florida No. 62514

PARTS LIST	
NO.	DESCRIPTION
1	HOOD ALUMINUM
2	HOOD FRONT, ALUMINUM
3	BRACKET RIGHT, ALUMINUM
4	MOTOR TUBE, ALUMINUM
5	MOTOR
6	BRACKET LEFT, ALUMINUM
7	MOTOR MOUNT NUTS
8	SIDE RAIL, ALUMINUM
9	SLAT, ALUMINUM
10	STANDARD BUILD-OUT, ALUMINUM
11	OPTIONAL BUILD-OUT, ALUMINUM
12	#14 x 3/4" SMS
13	IDLE BEARING HOUSING, ALUMINUM
14	BOTTOM SLAT, ALUMINUM
15	HEADER 2x4x1/8" ALUMINUM 6063-T5
16	2x4 SPRING BLOCK ASSEMBLY
17	STORM BAR 2x4x1/8" ALUMINUM 6063-T5
18	#10 TEK SELF TAPPING SCREW
19	POWER BOLT 1/2"x3"
20	LAG SCREW 1/2"x3"
21	BOLT HH 1/2-13x3" WITH WASHERS AND NUTS
22	MOUNTING ANGLE 2x4x1/8" 3" LONG
23	SPACER
24	END RETENTION - RIGHT
25	END RETENTION - LEFT
26	SIDE RAIL FOR END RETENTION, ALUMINUN (OPTIONAL)
27	HEADER U-CHANNEL ALUMINUM 6063-T5
28	STORM BAR 2x6x1/8 ALUMINUM
29	MOUNTING ANGLE
30	2x3 SPRING BLOCK ASSEMBLY
31	SIDE RAIL FOR END RETENTION, ALUMINUM

Maximum design pressure capacity chart (psf)
Storm bar 2x4x 1/8"

For units with one single storm bar unless otherwise noted

Height (in)	Storm bar spacing			
	28.5	34.3	44.2	42.0
48.0	- *	120.0	120.0	120**
54.0	- *	120.0	120.0	120**
60.0	- *	120.0	107.7	120**
66.0	- *	116.5	89.0	120**
72.0	119.3	97.9	74.8	105.1**
78.0	101.6	83.4	63.7	89.6**
84.0	87.6	71.9	54.9	77.2**

* UNITS 57" WIDE UP TO 66" HEIGHT DON'T REQUIRE STORM BARS TO ACHIEVE HIGHER DESIGN PRESSURES. REFER TO CHART IN SHEET ONE.
** DESIGN PRESSURES ARE BASED ON TWO STORM BARS PER UNIT.

Design pressure and min. separation Chart
For units w/o storm bars and w/o end retention system

Slat length (in)	Design Pressure (psf)	Deflection (in)	Separation from glass (in)
53.38	120.0	3.000	4.00
64.88	55.0	3.000	4.00
76.00	45.0	3.000	4.00
84.65	30.0	3.000	4.00

REVISIONS			
REV	DESCRIPTION	DATE	APPROVED
A	REVISED NOTE 1	02/02/12	R.L.

DESIGN PRESSURE CHARTS

FOR UNITS WIDER THAN 88 3/8" WITH TWO OR MORE STORM BARS

Maximum design pressure capacity chart (psf)
Storm bar 2x4x1/8"

Height (in)	Storm Bar spacing (in)
	42.0
48.0	120.0
54.0	120.0
60.0	107.8
66.0	89.1
72.0	74.9
78.0	63.8
84.0	55.0
90.0	47.9
96.0	42.1
102.0	37.3
108.0	33.3
114.0	29.9
120.0	27.0

Maximum design pressure capacity chart (psf)
Storm bar 2x6x1/8"

Height (in)	Storm Bar spacing (in)
	42.0
48.0	120.0
54.0	120.0
60.0	120.0
66.0	120.0
72.0	120.0
78.0	118.1
84.0	101.9
90.0	88.7
96.0	78.0
102.0	69.1
108.0	61.6
114.0	55.3
120.0	49.9

PRODUCT REVISED
as complying with the Florida Building Code
Acceptance No 12-0224.01
Expiration Date 02/08/2017
By
Miami Dade Product Control

USA SHUTTER COMPANY LLC
1455 RAIL HEAD BLVD, UNIT 6
NAPLES, FL 34110

ALUMINUM MAESTROSHIELD SHUTTER-IN-A-BOX
B.O.M. AND DESIGN PRESSURE CHARTS

DRAWN:	DWG NO.	REV
R.L.	08-00174	A

SCALE	DATE	SHEET
NTS	06/25/07	3 OF 10

02/02/12
Luis R. Lomas P.E.
Florida No. 62514

REVISIONS			
REV	DESCRIPTION	DATE	APPROVED
A	REVISED NOTE 1	02/02/12	R.L.

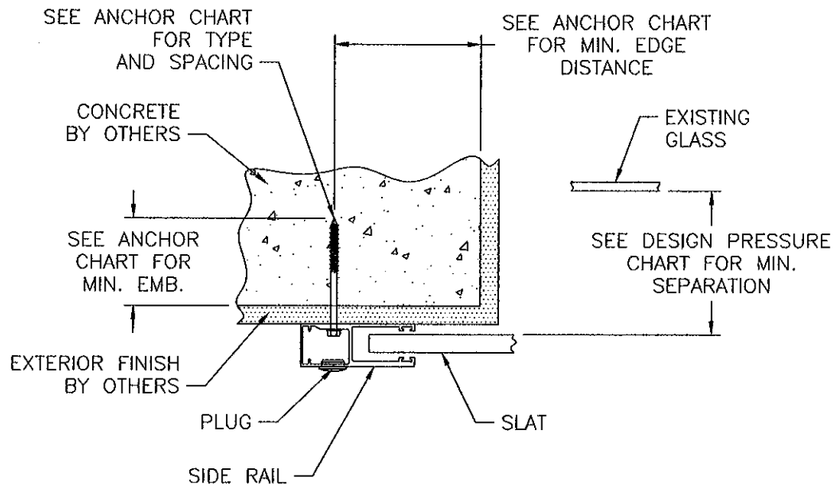

SECTION B-B
CONCRETE INSTALLATION SHOWN
SEE CHART SHEETS 7-9 FOR OTHER SUBSTRATES

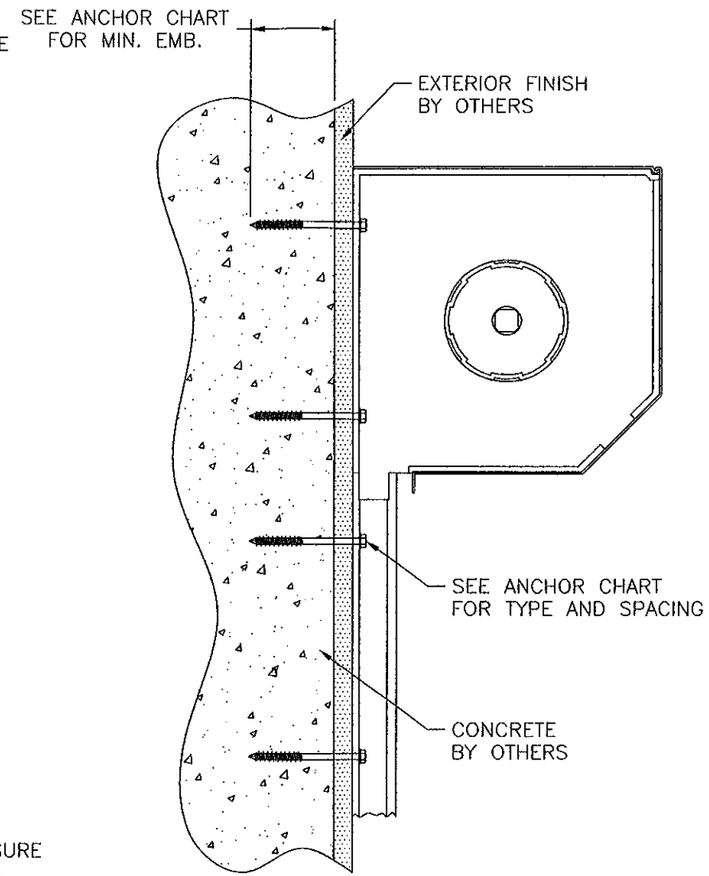

SECTION A-A
CONCRETE INSTALLATION SHOWN
SEE CHART SHEETS 7-9 FOR OTHER SUBSTRATES
SLATS NOT SHOWN FOR CLARITY

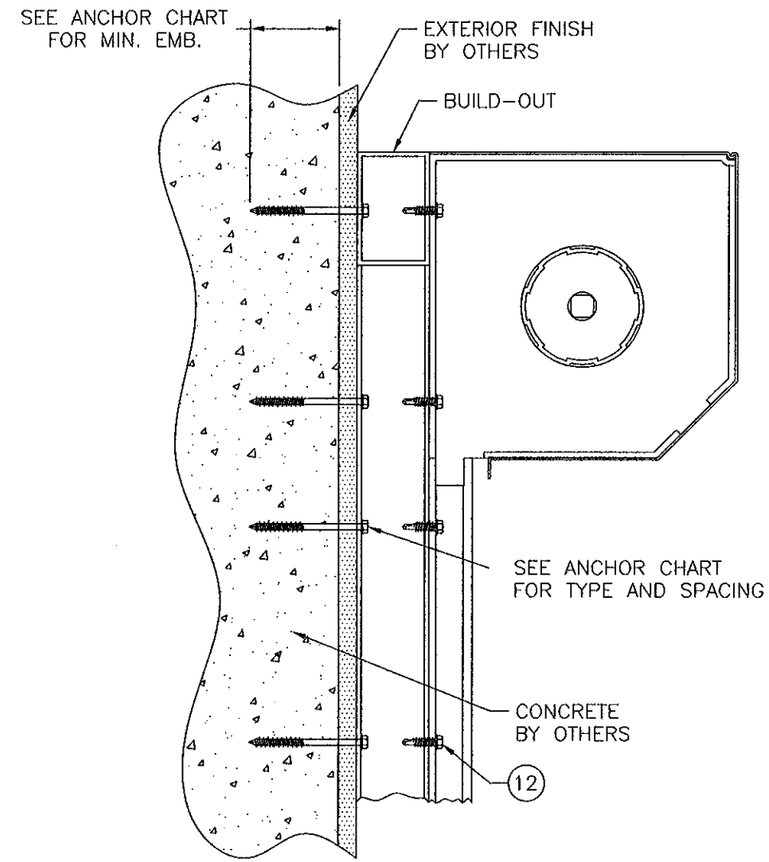

SECTION A-A
CONCRETE INSTALLATION SHOWN
SEE CHART SHEETS 7-9 FOR OTHER SUBSTRATES
SLATS NOT SHOWN FOR CLARITY

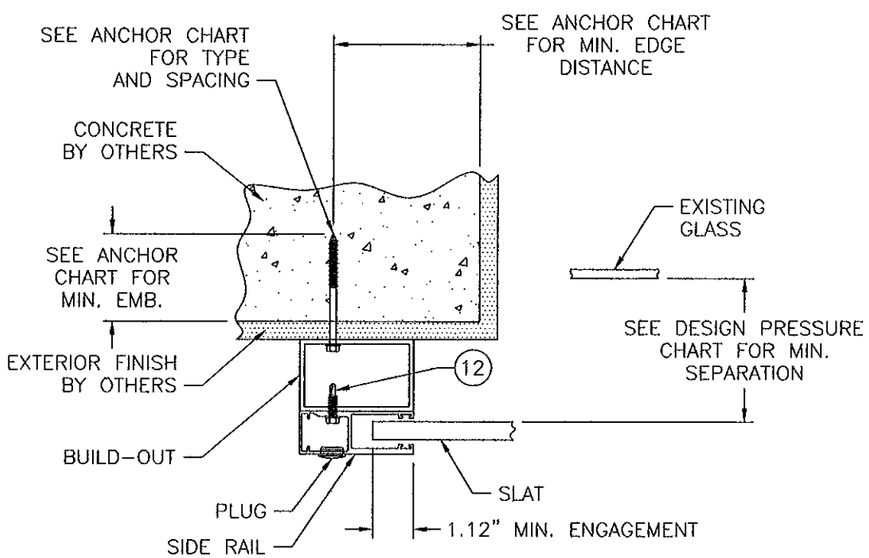

SECTION B-B
CONCRETE INSTALLATION SHOWN
SEE CHART SHEETS 7-9 FOR OTHER SUBSTRATES

PRODUCT REVISED
as complying with the Florida Building Code
Acceptance No 12-0224.01
Expiration Date 02/08/2017
By [signature]
Miami Dade Product Control

USA SHUTTER COMPANY LLC
1455 RAIL HEAD BLVD, UNIT 6
NAPLES, FL 34110

ALUMINUM MAESTROSHIELD SHUTTER-IN-A-BOX
INSTALLATION DETAILS

DRAWN:	DWG NO.	REV
R.L.	08-00174	A
SCALE NTS	DATE 06/25/07	SHEET 4 OF 10

[signature] 02/02/12
Luis R. Lomas P.E.
Florida No. 62514

REVISIONS			
REV	DESCRIPTION	DATE	APPROVED
A	REVISED NOTE 1	02/02/12	R.L.

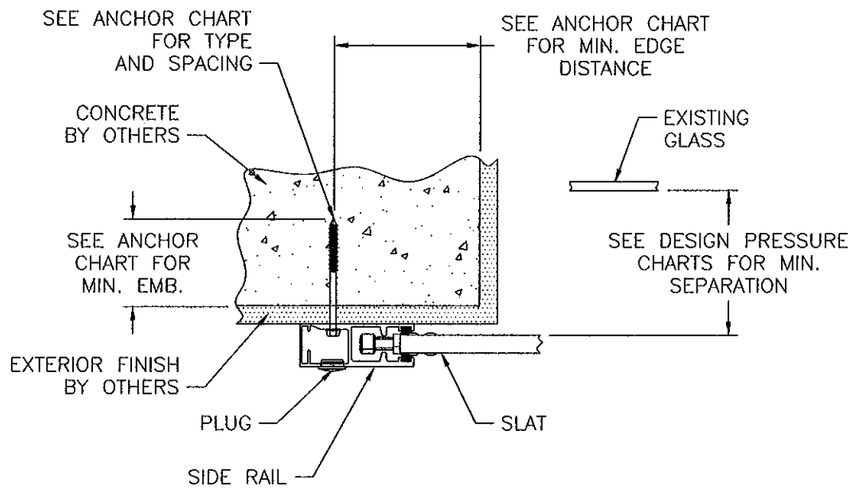

SECTION B-B

CONCRETE INSTALLATION SHOWN
SEE CHART SHEETS 7-9 FOR OTHER SUBSTRATES

NOTES:

1) END RETENTION IS REQUIRED IN SHUTTERS OF 88 3/16" FINISHED WIDTH WHEN A DESIGN PRESSURE HIGHER THAN 30PSF IS REQUIRED.
2) FOR SHUTTERS OF 88 3/16" UP TO 124" FINISHED WIDTH LOCATE END RETENTION AT SIX TOP AND BOTTOM SLATS AND EVERY OTHER SLAT IN BETWEEN.
3) FOR SHUTTERS WIDER THAN 124" FINISHED WIDTH LOCATE END RETENTION IN EVERY SLAT.

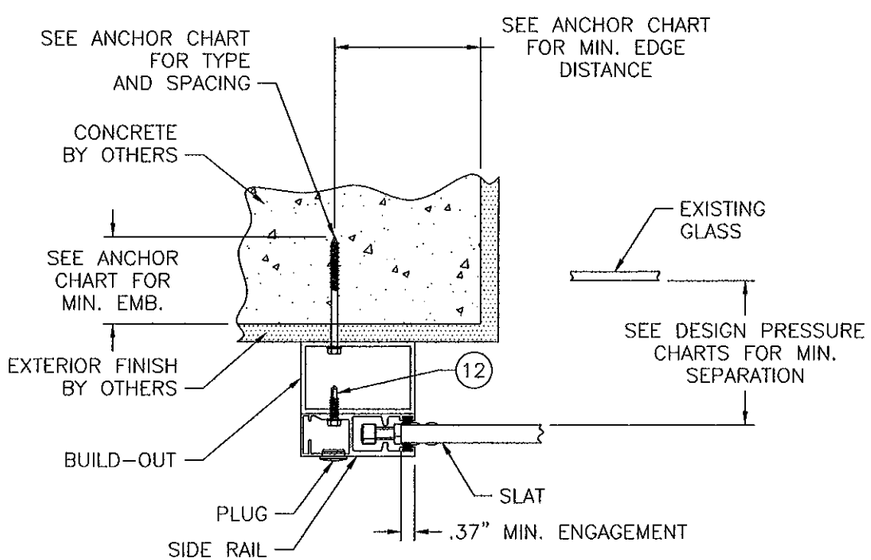

SECTION B-B

CONCRETE INSTALLATION SHOWN
SEE CHART SHEETS 7-9 FOR OTHER SUBSTRATES

PRODUCT REVISED
as complying with the Florida Building Code
Acceptance No 12-0224.01
Expiration Date 02/08/2017
By [signature]
Miami Dade Product Control

USA SHUTTER COMPANY LLC
1455 RAIL HEAD BLVD, UNIT 6
NAPLES, FL 34110

ALUMINUM MAESTROSHIELD SHUTTER-IN-A-BOX
INSTALLATION DETAILS – END RETENTION

DRAWN:	DWG NO.	REV
R.L.	08-00174	A
SCALE NTS	DATE 06/25/07	SHEET 5 OF 10

[signature] 02/02/12
Luis R. Lomas P.E.
Florida No. 62514

REVISIONS			
REV	DESCRIPTION	DATE	APPROVED
A	REVISED NOTE 1	02/02/12	R.L.

Anchor Chart For Slat Lengths Up to 53.375"

For units without Storm Bars

Anchor type	Substrate	Minimum embedment (in)	Minimum edge distance	Max. O.C. (in)	Max. Design pressure
1/4" Elco Tapcon	Concrete 3,000 psi min.	1.75	2.50	6.00	120
1/4" ITW Tapcon		1.75	2.50	6.00	120
1/4" Elco Crete-Flex		1.75	1.75	6.00	120
1/4" Panelmate Male		1.75	2.50	6.00	120
1/4" Panelmate Female		1.75	2.50	6.00	120
1/4" Sleeve anchor		1.13	1.50	6.00	120
1/4" Powers Calk-in		0.88	3.00	6.00	120
1/4" Drop-in bolt		1.00	3.50	6.00	120
1/4" All points solid set		0.88	3.00	6.00	120
1/4" Elco Tapcon	Hollow block	1.25	2.50	6.00	116
1/4" ITW Tapcon		1.25	2.50	6.00	106
1/4" Elco Crete-Flex		1.25	2.50	6.00	120
1/4" Panelmate Male		1.25	2.00	6.00	120
1/4" Panelmate Female		1.25	2.00	6.00	120
1/4" Sleeve anchor		1.13	1.50	6.00	120
1/4" Powers Calk-in		0.88	3.00	6.00	116
1/4" All points solid set		0.88	3.00	6.00	120
1/4" Lag screw	Wood .53 min. specific gravity	2.25	N/A	6.00	120
#14 Wood screw		2.00	N/A	6.00	120
1/4" Panelmate Male		0.75	1.88	6.00	120
1/4" Panelmate Female		0.75	1.88	6.00	120
1/4-14 Tek Screw	1/8" thick AL	N/A	N/A	6.00	120

Anchor Chart For Slat Lengths Up to 64.875"

For units without Storm Bars

Anchor type	Substrate	Minimum embedment (in)	Minimum edge distance	Max. O.C. (in)	Max. Design pressure
1/4" Elco Tapcon	Concrete 3,000 psi min.	1.75	2.50	6.00	55
1/4" ITW Tapcon		1.75	2.50	6.00	55
1/4" Elco Crete-Flex		1.75	1.75	6.00	55
1/4" Panelmate Male		1.75	2.50	6.00	55
1/4" Panelmate Female		1.75	2.50	6.00	55
1/4" Sleeve anchor		1.13	1.50	6.00	55
1/4" Powers Calk-in		0.88	3.00	6.00	55
1/4" Drop-in bolt		1.00	3.50	6.00	55
1/4" All points solid set		0.88	3.00	6.00	55
1/4" Elco Tapcon	Hollow block	1.25	2.50	6.00	55
1/4" ITW Tapcon		1.25	2.50	6.00	55
1/4" Elco Crete-Flex		1.25	2.50	6.00	55
1/4" Panelmate Male		1.25	2.00	6.00	55
1/4" Panelmate Female		1.25	2.00	6.00	55
1/4" Sleeve anchor		1.13	1.50	6.00	55
1/4" Powers Calk-in		0.88	3.00	6.00	55
1/4" All points solid set		0.88	3.00	6.00	55
1/4" Lag screw	Wood .53 min. specific gravity	2.25	N/A	6.00	55
#14 Wood screw		2.00	N/A	6.00	55
1/4" Panelmate Male		0.75	1.88	6.00	55
1/4" Panelmate Female		0.75	1.88	6.00	55
1/4-14 Tek Screw	1/8" thick AL	N/A	N/A	6.00	55

Anchor Chart For Slat Lengths Up to 84.65"

For units without Storm Bars

Anchor type	Substrate	Minimum embedment (in)	Minimum edge distance	Max. O.C. (in)	Max. Design pressure
1/4" Elco Tapcon	Concrete 3,000 psi min.	1.75	2.50	6.00	80
1/4" ITW Tapcon		1.75	2.50	6.00	80
1/4" Elco Crete-Flex		1.75	1.75	6.00	80
1/4" Panelmate Male		1.75	2.50	6.00	80
1/4" Panelmate Female		1.75	2.50	6.00	80
1/4" Sleeve anchor		1.13	1.50	6.00	80
1/4" Powers Calk-in		0.88	3.00	6.00	80
1/4" Drop-in bolt		1.00	3.50	6.00	80
1/4" All points solid set		0.88	3.00	6.00	80
1/4" Elco Tapcon	Hollow block	1.25	2.50	6.00	72
1/4" ITW Tapcon		1.25	2.50	6.00	66
1/4" Elco Crete-Flex		1.25	2.50	6.00	80
1/4" Panelmate Male		1.25	2.00	6.00	80
1/4" Panelmate Female		1.25	2.00	6.00	80
1/4" Sleeve anchor		1.13	1.50	6.00	80
1/4" Powers Calk-in		0.88	3.00	6.00	72
1/4" All points solid set		0.88	3.00	6.00	80
1/4" Lag screw	Wood .53 min. specific gravity	2.25	N/A	6.00	80
#14 Wood screw		2.00	N/A	6.00	80
1/4" Panelmate Male		0.75	1.88	6.00	80
1/4" Panelmate Female		0.75	1.88	6.00	80
1/4-14 Tek Screw	1/8" thick AL	N/A	N/A	6.00	80

NOTES:

1) INSTALL ANCHORS PER MANUFACTURER'S INSTALLATION INSTRUCTIONS.
2) MINIMUM EMBEDMENT SHALL BE PER ANCHOR CHART. ANCHORS MINIMUM EMBEDMENT IS BEYOND STUCCO, SHEATHING OR OTHER WALL FINISH.
3) TEK SCREWS MUST PENETRATE BEYOND THE ALUMINUM BUILD-OUT A MINIMUM OF THREE PITCH THREADS.
4) WOOD FRAMING TO BE .53 MINIMUM SPECIFIC GRAVITY.

PRODUCT REVISED
as complying with the Florida Building Code
Acceptance No 12-0224.01
Expiration Date 02/08/2017
By
Miami Dade Product Control

A

1455 RAIL HEAD BLVD, UNIT 6
NAPLES, FL 34110

ALUMINUM MAESTROSHIELD SHUTTER-IN-A-BOX
ANCHOR CHARTS FOR UNITS W/O STORM BARS

DRAWN: R.L.	DWG NO. 08-00174	REV A
SCALE NTS	DATE 06/25/07	SHEET 6 OF 10

02/02/12
Luis R. Lornas, P.E.
Florida No. 62514

ANCHORING CHART FOR SLAT LENGTHS UP TO 84"

UNITS WITH ONE STORM BAR AND UNITS WITH STORM BAR SPACING OF 42"

Anchor type	Substrate	Minimum embedment (in)	Minimum edge distance	Max. O.C. (in)	Max. Design pressure
1/4" Elco Tapcon	Concrete 3,000 psi min.	1.75	2.50	6.00	120
1/4" ITW Tapcon		1.75	2.50	6.00	120
1/4" Elco Crete-Flex		1.75	1.75	6.00	120
1/4" Panelmate Male		1.75	2.50	6.00	120
1/4" Panelmate Female		1.75	2.50	6.00	120
1/4" Sleeve anchor		1.13	1.50	6.00	120
1/4" Powers Calk-In		0.88	3.00	6.00	120
1/4" Drop-In bolt		1.00	3.50	6.00	101
1/4" All points solid set		0.88	3.00	6.00	120
1/4" Elco Tapcon	Hollow block	1.25	2.50	6.00	62
1/4" ITW Tapcon		1.25	2.50	6.00	57
1/4" Elco Crete-Flex		1.25	2.50	6.00	108
1/4" Panelmate Male		1.25	2.00	6.00	97
1/4" Panelmate Female		1.25	2.00	6.00	97
1/4" Sleeve anchor		1.13	1.50	6.00	99
1/4" Powers Calk-In		0.88	3.00	6.00	62
1/4" All points solid set		0.88	3.00	6.00	120
1/4" Lag screw	Wood .53 min. specific gravity	2.25	N/A	6.00	120
#14 Wood screw		2.00	N/A	6.00	120
1/4" Panelmate Male		0.75	1.88	6.00	120
1/4" Panelmate Female		0.75	1.88	6.00	120
1/4-14 Tek Screw	1/8" thick AL	N/A	N/A	6.00	120

ANCHORING CHART FOR SLAT LENGTHS UP TO 84"

UNITS WITH TWO STORM BARS

Anchor type	Substrate	Minimum embedment (in)	Minimum edge distance	Max. O.C. (in)	Max. Design pressure
1/4" Elco Tapcon	Concrete 3,000 psi min.	1.75	2.50	6.00	120
1/4" ITW Tapcon		1.75	2.50	6.00	120
1/4" Elco Crete-Flex		1.75	1.75	6.00	120
1/4" Panelmate Male		1.75	2.50	6.00	120
1/4" Panelmate Female		1.75	2.50	6.00	120
1/4" Sleeve anchor		1.13	1.50	6.00	120
1/4" Powers Calk-In		0.88	3.00	6.00	120
1/4" Drop-In bolt		1.00	3.50	6.00	120
1/4" All points solid set		0.88	3.00	6.00	120
1/4" Elco Tapcon	Hollow block	1.25	2.50	6.00	120
1/4" ITW Tapcon		1.25	2.50	6.00	110
1/4" Elco Crete-Flex		1.25	2.50	6.00	120
1/4" Panelmate Male		1.25	2.00	6.00	120
1/4" Panelmate Female		1.25	2.00	6.00	120
1/4" Sleeve anchor		1.13	1.50	6.00	120
1/4" Powers Calk-In		0.88	3.00	6.00	120
1/4" All points solid set		0.88	3.00	6.00	120
1/4" Lag screw	Wood .53 min. specific gravity	2.25	N/A	6.00	120
#14 Wood screw		2.00	N/A	6.00	120
1/4" Panelmate Male		0.75	1.88	6.00	120
1/4" Panelmate Female		0.75	1.88	6.00	120
1/4-14 Tek Screw	1/8" thick AL	N/A	N/A	6.00	120

ANCHORING CHART FOR SLAT LENGTHS UP TO 64.88"

UNITS WITH ONE STORM BAR

Anchor type	Substrate	Minimum embedment (in)	Minimum edge distance	Max. O.C. (in)	Max. Design pressure
1/4" Elco Tapcon	Concrete 3,000 psi min.	1.75	2.50	6.00	120
1/4" ITW Tapcon		1.75	2.50	6.00	120
1/4" Elco Crete-Flex		1.75	1.75	6.00	120
1/4" Panelmate Male		1.75	2.50	6.00	120
1/4" Panelmate Female		1.75	2.50	6.00	120
1/4" Sleeve anchor		1.13	1.50	6.00	120
1/4" Powers Calk-In		0.88	3.00	6.00	120
1/4" Drop-In bolt		1.00	3.50	6.00	120
1/4" All points solid set		0.88	3.00	6.00	120
1/4" Elco Tapcon	Hollow block	1.25	2.50	6.00	81
1/4" ITW Tapcon		1.25	2.50	6.00	74
1/4" Elco Crete-Flex		1.25	2.50	6.00	120
1/4" Panelmate Male		1.25	2.00	6.00	120
1/4" Panelmate Female		1.25	2.00	6.00	120
1/4" Sleeve anchor		1.13	1.50	6.00	120
1/4" Powers Calk-In		0.88	3.00	6.00	81
1/4" All points solid set		0.88	3.00	6.00	120
1/4" Lag screw	Wood .53 min. specific gravity	2.25	N/A	6.00	120
#14 Wood screw		2.00	N/A	6.00	120
1/4" Panelmate Male		0.75	1.88	6.00	120
1/4" Panelmate Female		0.75	1.88	6.00	120
1/4-14 Tek Screw	1/8" thick AL	N/A	N/A	6.00	120

ANCHORING CHART FOR SLAT LENGTHS UP TO 53.38"

UNITS WITH ONE STORM BAR

Anchor type	Substrate	Minimum embedment (in)	Minimum edge distance	Max. O.C. (in)	Max. Design pressure
1/4" Elco Tapcon	Concrete 3,000 psi min.	1.75	2.50	6.00	120
1/4" ITW Tapcon		1.75	2.50	6.00	120
1/4" Elco Crete-Flex		1.75	1.75	6.00	120
1/4" Panelmate Male		1.75	2.50	6.00	120
1/4" Panelmate Female		1.75	2.50	6.00	120
1/4" Sleeve anchor		1.13	1.50	6.00	120
1/4" Powers Calk-In		0.88	3.00	6.00	120
1/4" Drop-In bolt		1.00	3.50	6.00	120
1/4" All points solid set		0.88	3.00	6.00	120
1/4" Elco Tapcon	Hollow block	1.25	2.50	6.00	97
1/4" ITW Tapcon		1.25	2.50	6.00	89
1/4" Elco Crete-Flex		1.25	2.50	6.00	120
1/4" Panelmate Male		1.25	2.00	6.00	120
1/4" Panelmate Female		1.25	2.00	6.00	120
1/4" Sleeve anchor		1.13	1.50	6.00	120
1/4" Powers Calk-In		0.88	3.00	6.00	97
1/4" All points solid set		0.88	3.00	6.00	120
1/4" Lag screw	Wood .53 min. specific gravity	2.25	N/A	6.00	120
#14 Wood screw		2.00	N/A	6.00	120
1/4" Panelmate Male		0.75	1.88	6.00	120
1/4" Panelmate Female		0.75	1.88	6.00	120
1/4-14 Tek Screw	1/8" thick AL	N/A	N/A	6.00	120

REVISIONS

REV	DESCRIPTION	DATE	APPROVED
A	REVISED NOTE 1	02/02/12	R.L.

NOTES:

1) INSTALL ANCHORS PER MANUFACTURER'S INSTALLATION INSTRUCTIONS.
2) MINIMUM EMBEDMENT SHALL BE PER ANCHOR CHART. ANCHORS MINIMUM EMBEDMENT IS BEYOND STUCCO, SHEATHING OR OTHER WALL FINISH.
3) TEK SCREWS MUST PENETRATE BEYOND THE ALUMINUM BUILD-OUT A MINIMUM OF THREE PITCH THREADS.
4) WOOD FRAMING TO BE .53 MINIMUM SPECIFIC GRAVITY.

PRODUCT REVISED
as complying with the Florida Building Code
Acceptance No 12-0224.01
Expiration Date 02/08/2017
By
Miami Dade Product Control

USA SHUTTER COMPANY LLC
1455 RAIL HEAD BLVD, UNIT 6
NAPLES, FL 34110

ALUMINUM MAESTROSHIELD SHUTTER-IN-A-BOX
ANCHOR CHARTS FOR UNITS W/ STORM BARS

DRAWN:	DWG NO.	REV
R.L.	08-00174	A

SCALE NTS | DATE 06/25/07 | SHEET 7 OF 10

02/02/12
Luis R. Lomas P.E.
Florida No. 62514

REVISIONS			
REV	DESCRIPTION	DATE	APPROVED
A	REVISED NOTE 1	02/02/12	R.L.

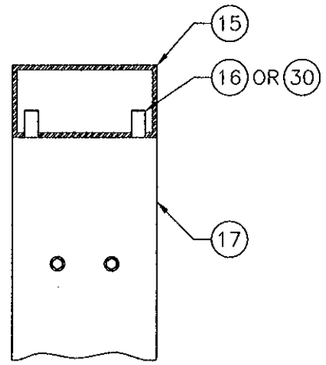

SECTION C-C
STORM BAR INSTALLATION TOP SIDE
FOR INSTALLING SPRING BLOCK TO STORM BAR
SEE DETAIL F
FOR UNITS 88 3/8" WIDE AND SMALLER

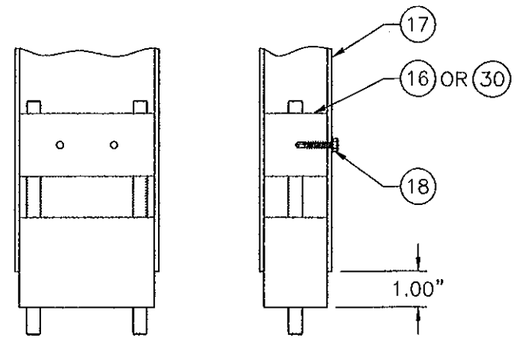

DETAIL F
SPRING BLOCK ASSY INSTALLATION TO STORM BAR

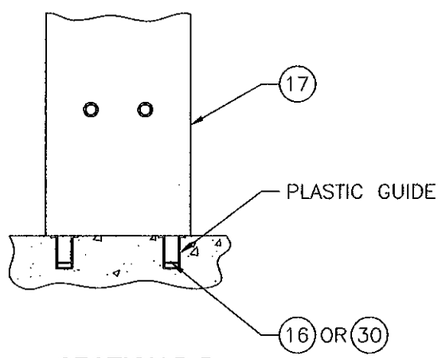

SECTION D-D
STORM BAR INSTALLATION BOTTOM SIDE
FOR INSTALLING SPRING BLOCK TO STORM BAR
SEE DETAIL F

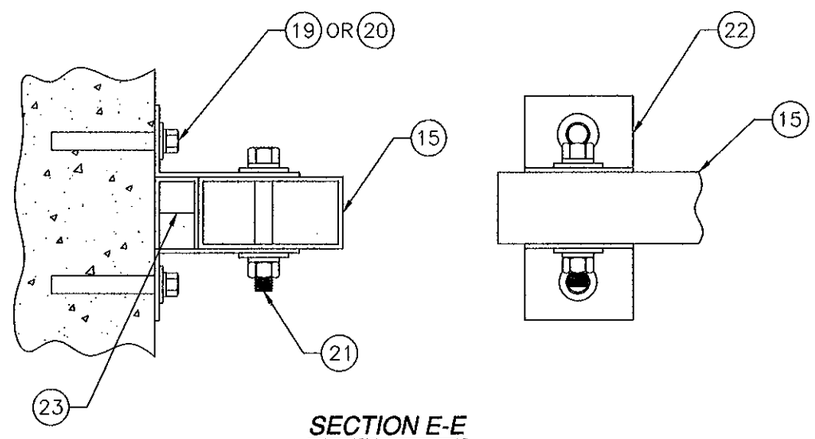

SECTION E-E
HEADER INSTALLATION
FOR UNITS 88 3/8" WIDE AND SMALLER

PRODUCT REVISED
as complying with the Florida Building Code
Acceptance No 12-0224.01
Expiration Date 02/08/2017
By
Miami Dade Product Control

USA SHUTTER COMPANY LLC
1455 RAIL HEAD BLVD, UNIT 6
NAPLES, FL 34110

ALUMINUM MAESTROSHIELD SHUTTER-IN-A-BOX
INSTALLATION DETAILS

DRAWN:	DWG NO.	REV
R.L.	08-00174	A
SCALE NTS	DATE 06/25/07	SHEET 8 OF 10

02/02/12
Luis R. Lomas P.E.
Florida No. 62514

REVISIONS			
REV	DESCRIPTION	DATE	APPROVED
A	REVISED NOTE 1	02/02/12	R.L.

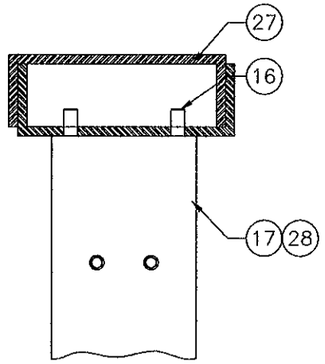

SECTION C-C
STORM BAR INSTALLATION TOP SIDE
FOR INSTALLING SPRING BLOCK TO STORM BAR
SEE DETAIL F
FOR UNITS 262 3/4" WIDE AND SMALLER

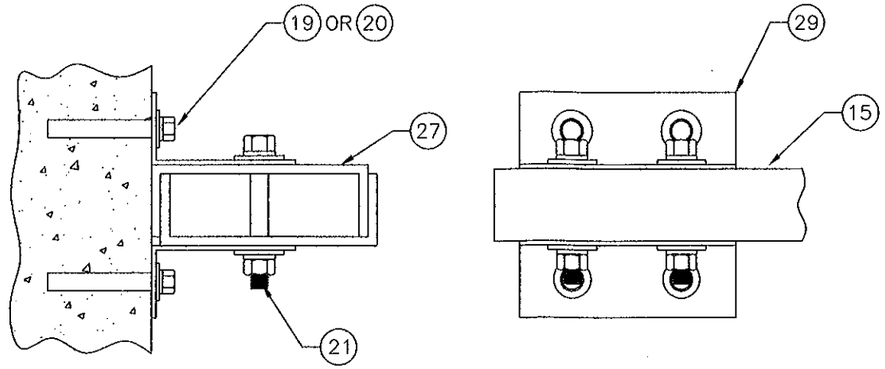

SECTION E-E
HEADER INSTALLATION
FOR UNITS 262 3/4" WIDE AND SMALLER

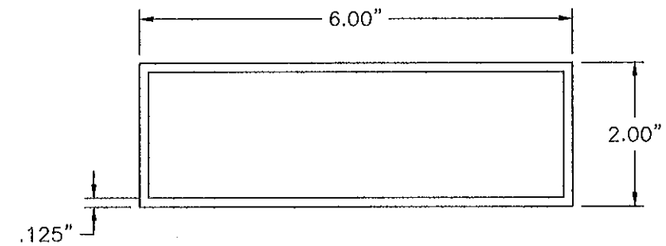

(28) **STORM BAR**
6063-T5 ALUMINUM

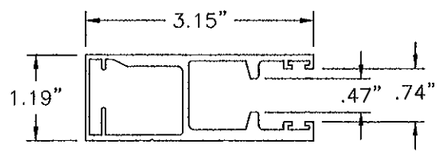

(31) **SIDE RAIL FOR END RETENTION**
6063-T5 ALUMINUM

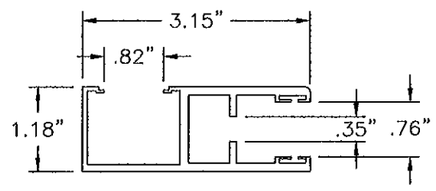

(26) **SIDE RAIL FOR END RETENTION(OPTIONAL)**
6063-T5 ALUMINUM

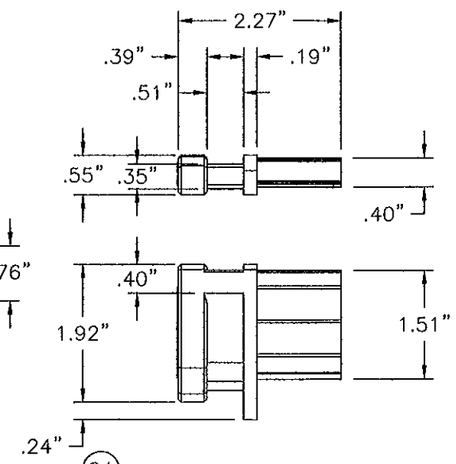

(24) **END RETENTION - RIGHT**
NYLON

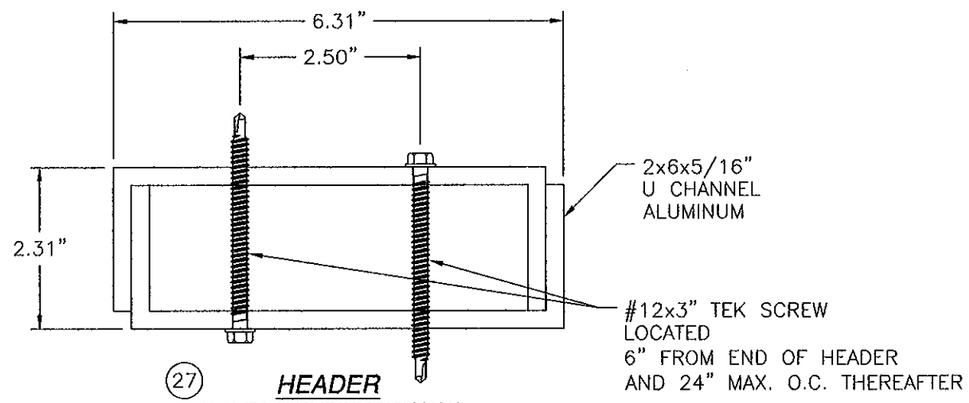

(27) **HEADER**
6063-T5 ALUMINUM (25' MAX.)

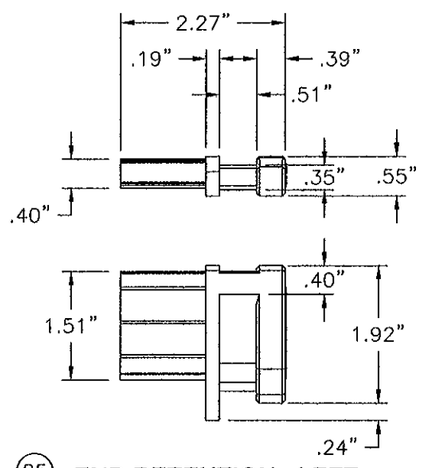

(25) **END RETENTION - LEFT**
NYLON

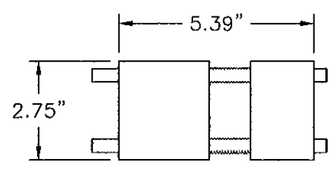

(30) **2X3 SPRING BLOCK**

PRODUCT REVISED
as complying with the Florida
Building Code
Acceptance No 12-0224.01
Expiration Date 02/08/2017
By
Miami Dade Product Control

USA SHUTTER COMPANY LLC
1455 RAIL HEAD BLVD, UNIT 6
NAPLES, FL 34110

ALUMINUM MAESTROSHIELD SHUTTER-IN-A-BOX
INSTALLATION DETAILS AND COMPONENTS

DRAWN: R.L.	DWG NO. 08-00174	REV A
SCALE NTS	DATE 06/25/07	SHEET 9 OF 10

02/02/12
Luis R. Lomas P.E.
Florida No. 62514

REVISIONS			
REV	DESCRIPTION	DATE	APPROVED
A	REVISED NOTE 1	02/02/12	R.L.

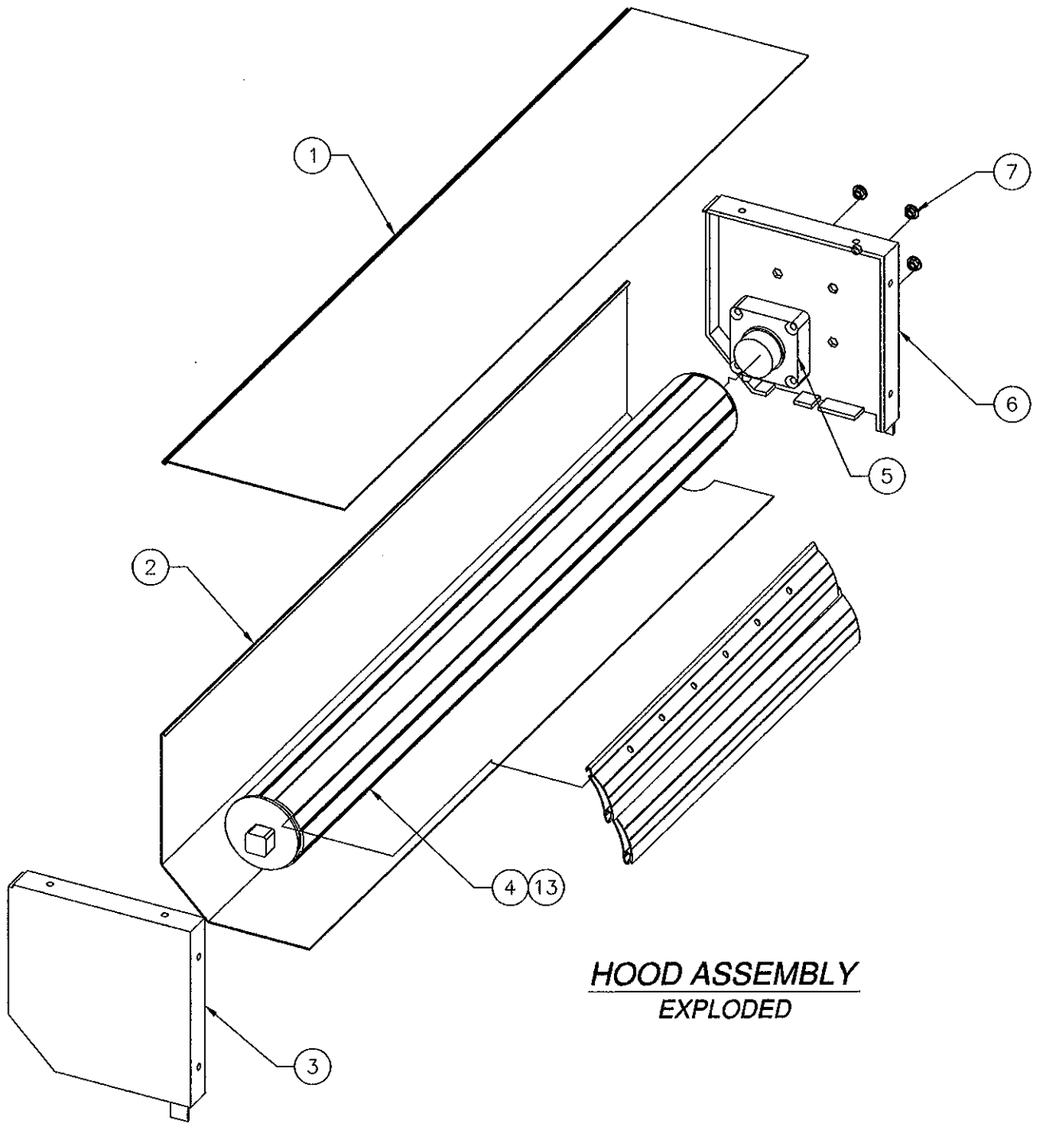

HOOD ASSEMBLY
EXPLODED

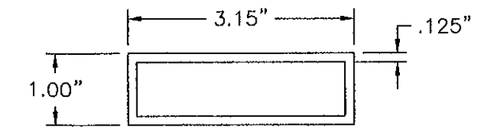

(10) **STANDARD BUILD-OUT**
6063-T5 ALUMINUM

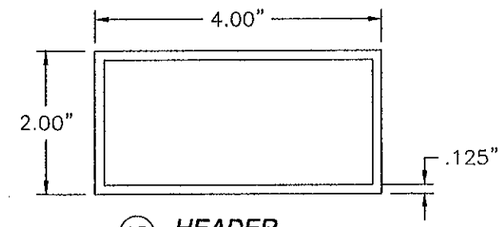

(15) **HEADER**
6063-T5 ALUMINUM

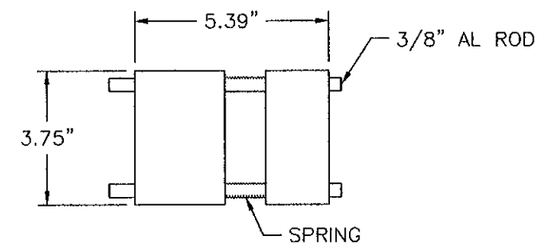

(16) **2x4 SPRING BLOCK ASSY**

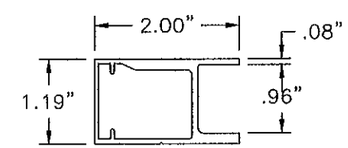

(23) **SPACER**
6063-T5 ALUMINUM
TRIM FROM SIDE RAIL

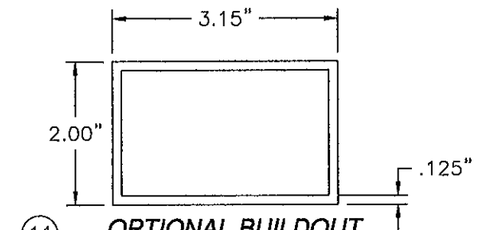

(11) **OPTIONAL BUILDOUT**
6063-T5 ALUMINUM

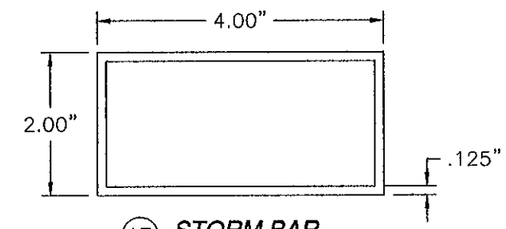

(17) **STORM BAR**
6063-T5 ALUMINUM

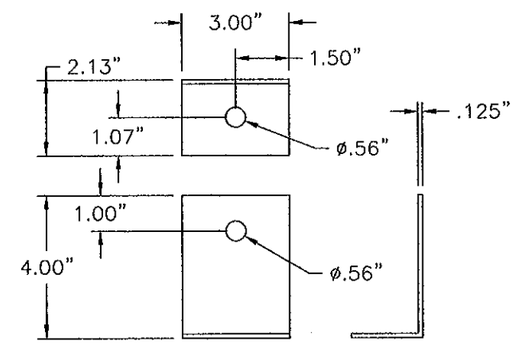

(22) **MOUNTING ANGLE**
6063-T5 ALUMINUM

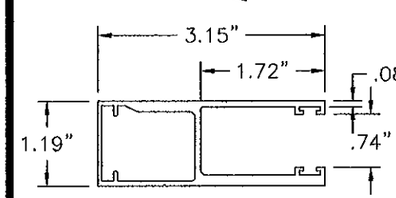

(8) **SIDE RAIL**
6063-T5 ALUMINUM

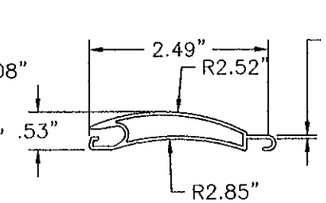

(9) **SLAT**
6063-T5 ALUMINUM

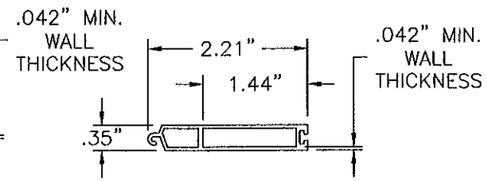

(14) **BOTTOM SLAT**
6063-T5 ALUMINUM

PRODUCT REVISED
as complying with the Florida Building Code
Acceptance No 12-0224.01
Expiration Date 02/08/2017
By
Miami Dade Product Control

USA SHUTTER COMPANY LLC
1455 RAIL HEAD BLVD, UNIT 6
NAPLES, FL 34110

ALUMINUM MAESTROSHIELD SHUTTER-IN-A-BOX COMPONENTS

DRAWN: R.L.	DWG NO. 08-00174	REV A
SCALE NTS	DATE 06/25/07	SHEET 10 OF 10

02/02/12
Luis R. Lornos P.E.
Florida No. 62514

REVISIONS			
REV	DESCRIPTION	DATE	APPROVED
A	REVIEWED PER 2010 CODE	02/02/2012	R.L.

Anchoring Chart for Slat Lengths Up To 120"

Units with storm bar spacing of 42" maximum

Anchor type	Substrate	Minimum embedment (in)	Minimum edge distance	Max. O.C. (in)	Max. Design pressure
1/4" Elco Tapcon	Concrete 3,000 psi min.	1.75	2.50	6.00	120
1/4" ITW Tapcon		1.75	2.50	6.00	120
1/4" Elco Crete-Flex		1.75	1.75	6.00	120
1/4" Panelmate Male		1.75	2.50	6.00	120
1/4" Panelmate Female		1.75	2.50	6.00	120
1/4" Sleeve anchor		1.13	1.50	6.00	120
1/4" Powers Calk-in		0.88	3.00	6.00	120
1/4" Drop-in bolt		1.00	3.50	6.00	104
1/4" All points solid set		0.88	3.00	6.00	120
1/4" Elco Tapcon	Hollow block	1.25	2.50	6.00	64
1/4" ITW Tapcon		1.25	2.50	6.00	59
1/4" Elco Crete-Flex		1.25	2.50	6.00	111
1/4" Panelmate Male		1.25	2.00	6.00	99
1/4" Panelmate Female		1.25	2.00	6.00	99
1/4" Sleeve anchor		1.13	1.50	6.00	102
1/4" Powers Calk-in		0.88	3.00	6.00	64
1/4" All points solid set		0.88	3.00	6.00	120
1/4" Lag screw	Wood .53 min. specific gravity	2.25	N/A	6.00	120
#14 Wood screw		2.00	N/A	6.00	120
1/4" Panelmate Male		0.75	1.88	6.00	120
1/4" Panelmate Female		0.75	1.88	6.00	120
1/4-14 Tek Screw	1/8" thick AL	N/A	N/A	6.00	120

Anchoring Chart for Slat Lengths Up To 168"

Units with storm bar spacing of 42" maximum

Anchor type	Substrate	Minimum embedment (in)	Minimum edge distance	Max. O.C. (in)	Max. Design pressure
1/4" Elco Tapcon	Concrete 3,000 psi min.	1.75	2.50	6.00	120
1/4" ITW Tapcon		1.75	2.50	6.00	120
1/4" Elco Crete-Flex		1.75	1.75	6.00	120
1/4" Panelmate Male		1.75	2.50	6.00	120
1/4" Panelmate Female		1.75	2.50	6.00	120
1/4" Sleeve anchor		1.13	1.50	6.00	120
1/4" Powers Calk-in		0.88	3.00	6.00	120
1/4" Drop-in bolt		1.00	3.50	6.00	104
1/4" All points solid set		0.88	3.00	6.00	120
1/4" Elco Tapcon	Hollow block	1.25	2.50	6.00	64
1/4" ITW Tapcon		1.25	2.50	6.00	59
1/4" Elco Crete-Flex		1.25	2.50	6.00	111
1/4" Panelmate Male		1.25	2.00	6.00	99
1/4" Panelmate Female		1.25	2.00	6.00	99
1/4" Sleeve anchor		1.13	1.50	6.00	102
1/4" Powers Calk-in		0.88	3.00	6.00	64
1/4" All points solid set		0.88	3.00	6.00	120
1/4" Lag screw	Wood .53 min. specific gravity	2.25	N/A	6.00	120
#14 Wood screw		2.00	N/A	6.00	120
1/4" Panelmate Male		0.75	1.88	6.00	120
1/4" Panelmate Female		0.75	1.88	6.00	120
1/4-14 Tek Screw	1/8" thick AL	N/A	N/A	6.00	120

Anchoring Chart for Slat Lengths Up To 216"

Units with storm bar spacing of 42" maximum

Anchor type	Substrate	Minimum embedment (in)	Minimum edge distance	Max. O.C. (in)	Max. Design pressure
1/4" Elco Tapcon	Concrete 3,000 psi min.	1.75	2.50	6.00	120
1/4" ITW Tapcon		1.75	2.50	6.00	120
1/4" Elco Crete-Flex		1.75	1.75	6.00	120
1/4" Panelmate Male		1.75	2.50	6.00	120
1/4" Panelmate Female		1.75	2.50	6.00	120
1/4" Sleeve anchor		1.13	1.50	6.00	120
1/4" Powers Calk-in		0.88	3.00	6.00	120
1/4" Drop-in bolt		1.00	3.50	6.00	104
1/4" All points solid set		0.88	3.00	6.00	120
1/4" Elco Tapcon	Hollow block	1.25	2.50	6.00	64
1/4" ITW Tapcon		1.25	2.50	6.00	59
1/4" Elco Crete-Flex		1.25	2.50	6.00	111
1/4" Panelmate Male		1.25	2.00	6.00	99
1/4" Panelmate Female		1.25	2.00	6.00	99
1/4" Sleeve anchor		1.13	1.50	6.00	102
1/4" Powers Calk-in		0.88	3.00	6.00	64
1/4" All points solid set		0.88	3.00	6.00	120
1/4" Lag screw	Wood .53 min. specific gravity	2.25	N/A	6.00	120
#14 Wood screw		2.00	N/A	6.00	120
1/4" Panelmate Male		0.75	1.88	6.00	120
1/4" Panelmate Female		0.75	1.88	6.00	120
1/4-14 Tek Screw	1/8" thick AL	N/A	N/A	6.00	120

Anchoring Chart for Slat Lengths Up To 257 5/8"

Units with storm bar spacing of 42" maximum

Anchor type	Substrate	Minimum embedment (in)	Minimum edge distance	Max. O.C. (in)	Max. Design pressure
1/4" Elco Tapcon	Concrete 3,000 psi min.	1.75	2.50	6.00	120
1/4" ITW Tapcon		1.75	2.50	6.00	120
1/4" Elco Crete-Flex		1.75	1.75	6.00	120
1/4" Panelmate Male		1.75	2.50	6.00	120
1/4" Panelmate Female		1.75	2.50	6.00	120
1/4" Sleeve anchor		1.13	1.50	6.00	120
1/4" Powers Calk-in		0.88	3.00	6.00	120
1/4" Drop-in bolt		1.00	3.50	6.00	104
1/4" All points solid set		0.88	3.00	6.00	120
1/4" Elco Tapcon	Hollow block	1.25	2.50	6.00	64
1/4" ITW Tapcon		1.25	2.50	6.00	59
1/4" Elco Crete-Flex		1.25	2.50	6.00	111
1/4" Panelmate Male		1.25	2.00	6.00	99
1/4" Panelmate Female		1.25	2.00	6.00	99
1/4" Sleeve anchor		1.13	1.50	6.00	102
1/4" Powers Calk-in		0.88	3.00	6.00	64
1/4" All points solid set		0.88	3.00	6.00	120
1/4" Lag screw	Wood .53 min. specific gravity	2.25	N/A	6.00	120
#14 Wood screw		2.00	N/A	6.00	120
1/4" Panelmate Male		0.75	1.88	6.00	120
1/4" Panelmate Female		0.75	1.88	6.00	120
1/4-14 Tek Screw	1/8" thick AL	N/A	N/A	6.00	120

NOTES:

1) THESE ANCHOR CHARTS APPLY TO THE PRODUCTS SHOWN IN DRAWING NUMBER 08--00174.

2) FOR PRODUCT INSTALLATION DETAILS, UNITS W/ OUT STORM BARS, UNITS W/ STORM BARS SMALLER THAN 120" IN LENGTH, DESIGN PRESSURES AND OVERALL DIMENSIONS REFER TO DRAWING NUMBER 08-00174.

PRODUCT REVISED
as complying with the Florida Building Code
Acceptance No 12-0224.01
Expiration Date 02/08/2017
By
Miami Dade Product Control

USA SHUTTER COMPANY LLC
1455 RAIL HEAD BLVD, UNIT 6
NAPLES, FL 34110

ALUMINUM MAESTROSHIELD SHUTTER-IN-A-BOX
ANCHOR CHARTS UNITS UP TO 257" W/STORM BARS

DRAWN:	DWG NO.	REV
R.L.	08-00214	A
SCALE NTS	DATE 6/25/07	SHEET 1 OF 1

02/02/12

Luis R. Lomas P.E.
Florida No. 62514