MIAMI-DADE COUNTY
DEPARTMENT OF REGULATORY AND ECONOMIC RESOURCES
BOARD AND CODE ADMINISTRATION DIVISION

MIAMI-DADE COUNTY
PRODUCT CONTROL SECTION
11805 SW 26 Street, Room 208
Miami, Florida 33175-2474
T (786) 315-2590 F (786) 315-2599
www.miamidade.gov/building

NOTICE OF ACCEPTANCE (NOA)

Bristol Fiberlite Industries, Inc.
401 East Goetz Avenue
Santa Ana, CA 92707

SCOPE:
This NOA is being issued under the applicable rules and regulations governing the use of construction materials. The documentation submitted has been reviewed and accepted by Miami-Dade County RER-Product Control Section to be used in Miami Dade County and other areas where allowed by the Authority Having Jurisdiction (AHJ).

This NOA shall not be valid after the expiration date stated below. The Miami-Dade County Product Control Section (In Miami Dade County) and/or the AHJ (in areas other than Miami Dade County) reserve the right to have this product or material tested for quality assurance purposes. If this product or material fails to perform in the accepted manner, the manufacturer will incur the expense of such testing and the AHJ may immediately revoke, modify, or suspend the use of such product or material within their jurisdiction. RER reserves the right to revoke this acceptance, if it is determined by Miami-Dade County Product Control Section that this product or material fails to meet the requirements of the applicable building code.

This product is approved as described herein, and has been designed to comply with the High Velocity Hurricane Zone of the Florida Building Code.

DESCRIPTION: Series "1000" Glass and Aluminum Extrusions Skylight Systems

APPROVAL DOCUMENT: Drawing No. 11-BRS-0001, titled "Missile Impact Test", sheets 1 through 8 of 8, prepared by Engineering Express, signed and sealed by Frank L. Bennardo, P.E., on February 27, 2012, bearing the Miami-Dade County Product Control Revision stamp with the Notice of Acceptance number and the expiration date by the Miami-Dade County Product Control Section.

MISSILE IMPACT RATING: Large and Small Missile Impact Resistant

LABELING: Each unit shall bear a permanent label with the manufacturer's name or logo, city, state and the following statement: "Miami-Dade County Product Control Approved", unless otherwise noted herein.

RENEWAL of this NOA shall be considered after a renewal application has been filed and there has been no change in the applicable building code negatively affecting the performance of this product.

TERMINATION of this NOA will occur after the expiration date or if there has been a revision or change in the materials, use, and/or manufacture of the product or process. Misuse of this NOA as an endorsement of any product, for sales, advertising or any other purposes shall automatically terminate this NOA. Failure to comply with any section of this NOA shall be cause for termination and removal of NOA.

ADVERTISEMENT: The NOA number preceded by the words Miami-Dade County, Florida, and followed by the expiration date may be displayed in advertising literature. If any portion of the NOA is displayed, then it shall be done in its entirety.

INSPECTION: A copy of this entire NOA shall be provided to the user by the manufacturer or its distributors and shall be available for inspection at the job site at the request of the Building Official.

This NOA **revises NOA # 11-0915.04** and consists of this page 1, evidence submitted pages E-1, E-2, & E-3 as well as approval document mentioned above.

The submitted documentation was reviewed by **Helmy A. Makar, P.E., M.S.**

MIAMI-DADE COUNTY APPROVED

Helmy A. Makar
06/21/2012

NOA No. 12-0301.03
Expiration Date: 12/10/2016
Approval Date: 06/21/2012

Bristol Fiberlite Industries, Inc.

NOTICE OF ACCEPTANCE: EVIDENCE SUBMITTED

1. EVIDENCE SUBMITTED UNDER PREVIOUS APPROVAL # 98-0331.01

A. DRAWING

1. *Drawings prepared by Robert Henry, P. E., titled "Missle Impact Test", Sheets 1 through 8 of 8, dated 04/23/97 with latest revision on 11/05/98, signed and sealed by Robert Henry, P. E. and Die Drawings, Sheets 1 through 4 of 4.*

B. TEST

1. *Test Report on Large Missile Impact Test, Cyclic Wind Pressure Test and Uniform Static Air Pressure Test "TriStar Skylights Inc. Impact Series 1000" prepared by Hurricane Test Laboratory, Inc., Report No. 0130-0505-97, dated 05/05/97, signed and sealed by Timothy S. Marshall, P.E.*

C. CALCULATIONS

1. *Skylight calculation and anchor analysis dated 04/29/97, Sheets 1 through 29 of 29, prepared by Robert Henry, P.E., signed and sealed by Robert Henry, P.E.*

D. MATERIAL CERTIFICATION

1. *Product Control Notice of Acceptance to Globe Amerada Glass Company for Glass-Clad Polycarbonate Sheets, Acceptance No. 98-0513.03, expiring on 09/03/2001.*

2. EVIDENCE SUBMITTED UNDER PREVIOUS APPROVAL # 01-1114.01

A. DRAWINGS

1. *Manufacturer's die drawings and sections.*
2. *Drawing No. 0046549, titled "Missile Impact Test", sheets 1 through 8, prepared, signed and sealed by Frank Bennardo, P.E., dated 11/5/98.*

B. TESTS

See NOA 98-0331.01

C. CALCULATIONS

See NOA 98-0331.01

D. MATERIAL CERTIFICATIONS

See NOA 98-0331.01

E. STATEMENTS

See NOA 98-0331.01

F. OTHER

See NOA 98-0331.01

Hemy A. Makar, P.E., M.S.
RER, Product Control Unit Supervisor
NOA No. 12-0301.03
Expiration Date: 12/10/2016
Approval Date: 06/21/2012

NOTICE OF ACCEPTANCE: EVIDENCE SUBMITTED

3. EVIDENCE SUBMITTED UNDER PREVIOUS APPROVAL #06-0913.07

A. DRAWINGS

1. *Drawing titled "Missile Impact Test", sheets 1 through 8 of 8, prepared by Engineering Express, signed and sealed by Frank L. Bennardo, P.E. on 03/21/2007.*

B. TESTS

1. *None.*

C. CALCULATIONS

1. *None.*

D. QUALITY ASSURANCE

1. *By Miami-Dade County Building Code Compliance Office.*

E. MATERIAL CERTIFICATIONS

1. *None.*

4. EVIDENCE SUBMITTED UNDER PREVIOUS APPROVAL #07-0524.05

A. DRAWINGS

1. *None.*

B. TESTS

1. *Test Report on Large Missile Impact Test, Cyclic Wind Pressure Test and Uniform Static Air Pressure Test "Bristolite Skylights Impact Series 1000" prepared by Architectural Testing, Report No. 77141.01-301-18, dated 06/12/2008, signed and sealed by Jeffrey T. Kaminski, P.E.*

C. CALCULATIONS

1. *None.*

D. QUALITY ASSURANCE

1. *By Miami-Dade County Building Code Compliance Office.*

E. MATERIAL CERTIFICATIONS

1. *None.*

Helmy A. Makar, P.E., M.S.
RER, Product Control Unit Supervisor
NOA No. 12-0301.03
Expiration Date: 12/10/2016
Approval Date: 06/21/2012

NOTICE OF ACCEPTANCE: EVIDENCE SUBMITTED

5. EVIDENCE SUBMITTED UNDER PREVIOUS APPROVAL # 11-0915.04

A. DRAWINGS

1. *Drawing titled "Missile Impact Test", sheets 1 through 8 of 8, prepared by Engineering Express, signed and sealed by Frank L. Bennardo, P.E. on December 01, 2011.*

B. TESTS

1. *None.*

C. CALCULATIONS

1. *None.*

D. QUALITY ASSURANCE

1. *By Miami-Dade County Department of Permitting, Environment, and Regulatory Affairs (PERA).*

E. MATERIAL CERTIFICATIONS

1. *None.*

6. NEW EVIDENCE SUBMITTED

A. DRAWINGS

1. *Drawing No. 11-BRS-0001, titled "Missile Impact Test", sheets 1 through 8 of 8, prepared by Engineering Express, signed and sealed by Frank L. Bennardo, P.E., on February 27, 2012.*

B. TESTS

1. *None.*

C. CALCULATIONS

1. *None.*

D. QUALITY ASSURANCE

1. *By Miami-Dade County Department of Regulatory and Economic Resources (RER).*

E. MATERIAL CERTIFICATIONS

1. *None.*

Hemy A. Makar, P.E., M.S.
RER, Product Control Unit Supervisor
NOA No. 12-0301.03
Expiration Date: 12/10/2016
Approval Date: 06/21/2012

REVISIONS			
REV.	DESCRIPTION	DATE	B
A	REVISION PER METRO-DADE NOTES	12-20-2006	R

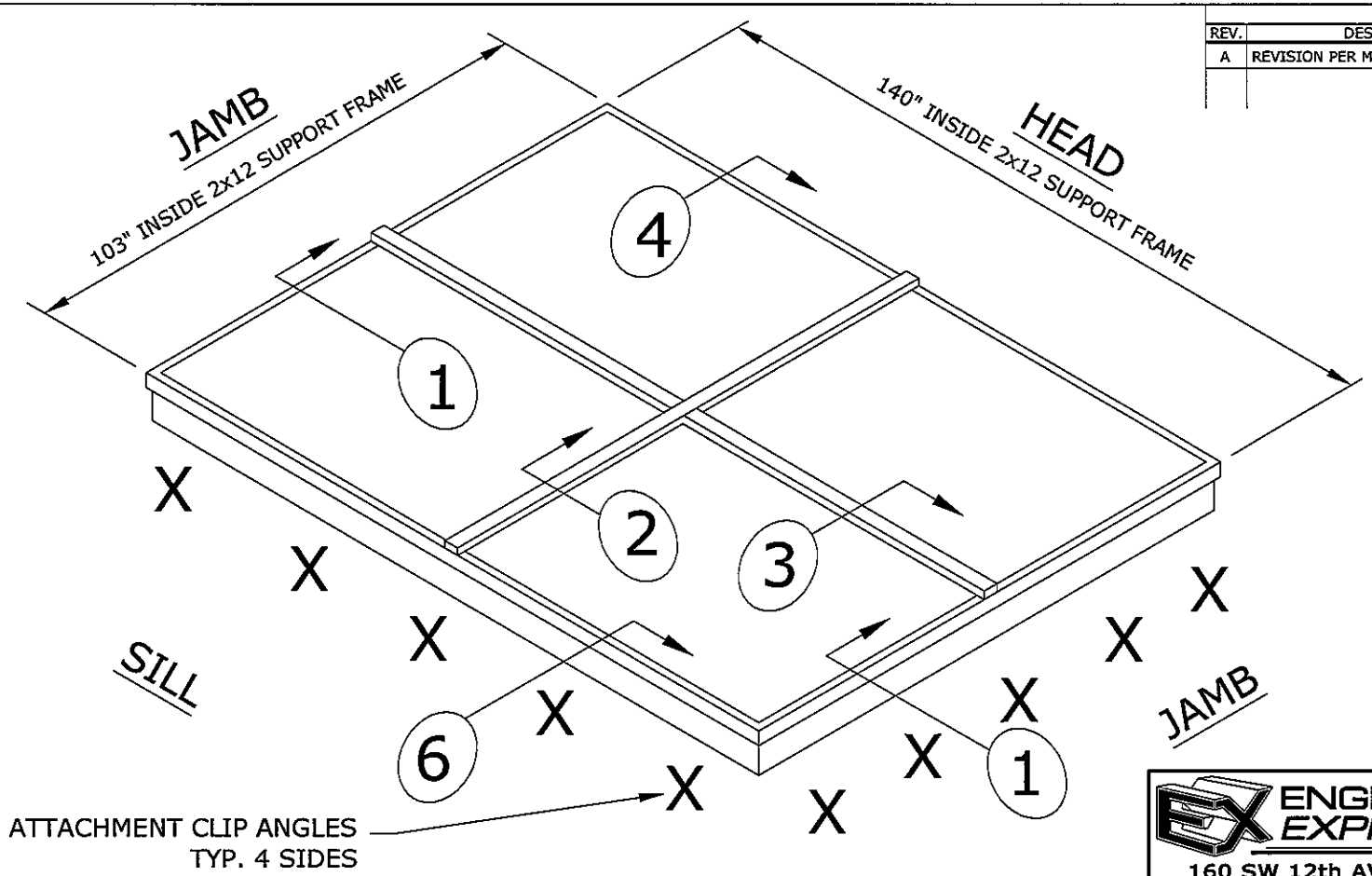

PRODUCT REVISED
as complying with the Florida
Building Code
Acceptance No 12-0301.03
Expiration Date 12/10/2016
By
Miami Dade Product Control

SEE SHEET 8 FOR GENERAL NOTES

ENGINEERING EXPRESS®
160 SW 12th AVENUE, #106
DEERFIELD BEACH, FL 33442
PH: (954) 354-0660 FAX: (954) 354-0443
WWW.ENGEXP.COM
CERT OF AUTH #9885
A FRANK L. BENNARDO, P.E., INC. INNOVATION

FRANK L. BENNARDO, P.E.
FL # PE0046549
FEB 27 2012
LICENSE No. 46549
STATE OF FLORIDA
PROFESSIONAL ENGINEER
VALID ONLY WITH ORIGINAL ENGINEER SEAL

ALL DIMENSIONS ARE IN INCHES TOLERANCES: UNLESS OTHERWISE SPECIFIED .x: ±.06 .xx: ±.03 .xxx: ±.010 ANGULAR: ±2° FRACTIONAL: ±1/16"	SCALE NONE	MATERIAL NONE	
	Bristol Fiberlite Industries, Inc. 401 East Goetz Avenue, Santa Ana, CA 92707 714.540.8950 / FAX 714.545.2364		
DRAWN BY: R.P. DATE: 12-20-06	NAME	Missile Impact Test	
APPROVED BY: DATE:	DWG NO.	11-BRS-0001	REV A
	NEXT ASSEMBLY		SHEET 1 OF 8

1.- GLAZING: 1/4" HS / 0.090" DUPONT SGP / 1/4" HS.

2.- MAXIMUM GLAZING PANEL SIZE = 48" x 67 5/8".

NOTES: UNLESS OTHERWISE SPECIFIED

REVISIONS			
REV.	DESCRIPTION	DATE	B
A	REVISION PER METRO-DADE NOTES	12-20-2006	R

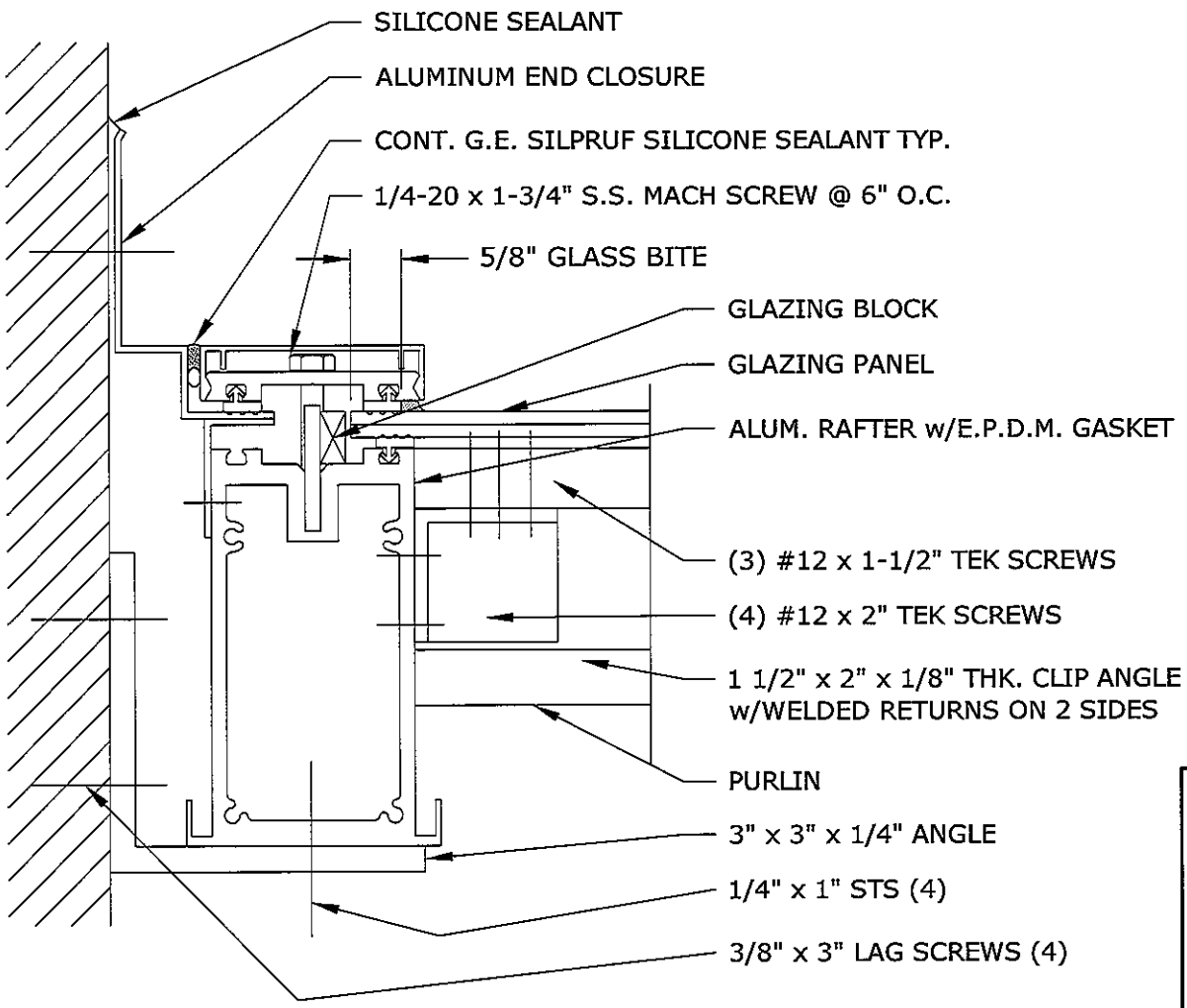

PRODUCT REVISED
as complying with the Florida
Building Code
Acceptance No 12-0301.03
Expiration Date 12/10/2016
By [signature]
Miami Dade Product Control

ENGINEERING EXPRESS®
160 SW 12th AVENUE, #106
DEERFIELD BEACH, FL 33442
PH: (954) 354-0660 FAX: (954) 354-0443
WWW.ENGEXP.COM
CERT OF AUTH #9885
A FRANK L. BENNARDO, P.E., INC. INNOVATION

FRANK L. BENNARDO, P.E.
FL #PE0045549
LICENSE
No. 46549
FEB 27 2012
STATE OF FLORIDA
PROFESSIONAL ENGINEER
VALID ONLY WITH ORIGINAL ENGINEER SEAL

DETAIL 1

FRAME ATTACHMENT

NOTES: UNLESS OTHERWISE SPECIFIED

ALL DIMENSIONS ARE IN INCHES TOLERANCES: UNLESS OTHERWISE SPECIFIED .X: ±.06 .XX: ±.03 .XXX: ±.010 ANGULAR: ±2° FRACTIONAL: ±1/16"		SCALE NONE	MATERIAL NONE
DRAWN BY: R.P.	DATE: 12-20-06	Bristol Fiberlite Industries, Inc. 401 East Goetz Avenue, Santa Ana, CA 92707 714.540.8950 / FAX 714.545.2364	
APPROVED BY:	DATE:	NAME Missile Impact Test	
		DWG NO. 11-BRS-0001	REV A
		NEXT ASSEMBLY	SHEET 2 OF 8

REVISIONS			
REV.	DESCRIPTION	DATE	B
A	REVISION PER METRO-DADE NOTES	12-20-2006	R

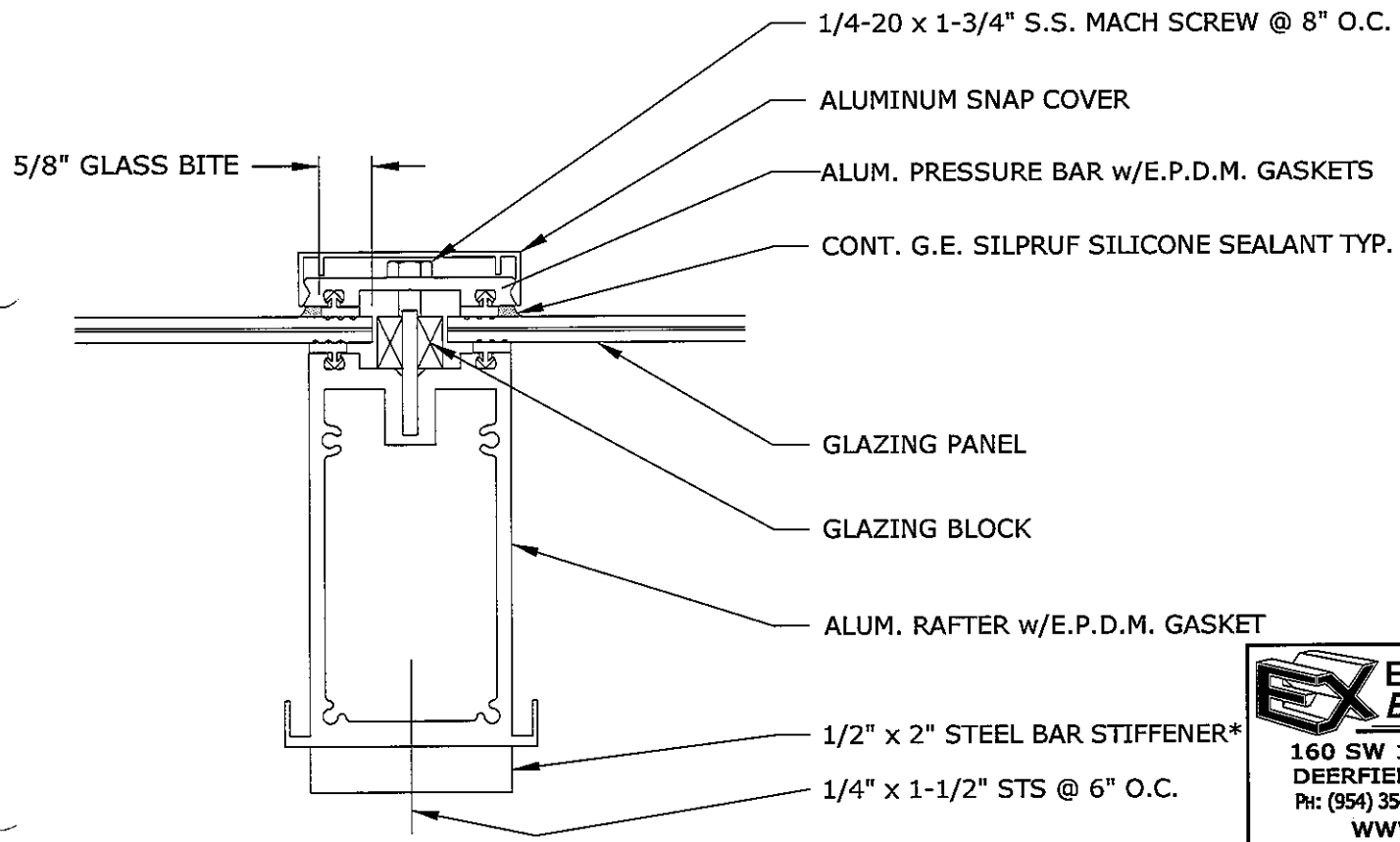

DETAIL 2

RAFTER

PRODUCT REVISED
as complying with the Florida
Building Code
Acceptance No 12-0301.03
Expiration Date 12/10/2016
By
Miami Dade Product Control

ENGINEERING EXPRESS®
160 SW 12th AVENUE, #106
DEERFIELD BEACH, FL 33442
PH: (954) 354-0660 FAX: (954) 354-0443
WWW.ENGEXP.COM
CERT OF AUTH #9885
A FRANK L. BENNARDO, P.E., INC. INNOVATION
FRANK L. BENNARDO, P.E.
FL #PE0046549

FRANK L. BENNARDO
No 46549
FEB 27 2012
STATE OF FLORIDA
PROFESSIONAL ENGINEER
VALID ONLY WITH ORIGINAL ENGINEER SEAL

ALL DIMENSIONS ARE IN INCHES TOLERANCES: UNLESS OTHERWISE SPECIFIED .X: ±.06 .XX: ±.03 .XXX: ±.010 ANGULAR: ±2° FRACTIONAL: ±1/16"	SCALE NONE	MATERIAL NONE	
	Bristol Fiberlite Industries, Inc 401 East Goetz Avenue, Santa Ana, CA 92707 714.540.8950 / FAX 714.545.2364		
DRAWN BY: R.P. DATE: 12-21-06 APPROVED BY: DATE:	NAME Missile Impact Test		
	DWG NO. 11-BRS-0001		REV A
	NEXT ASSEMBLY		SHEET 3 OF 8

* EQUIVALENT TO 6" RAFTER.

NOTES: UNLESS OTHERWISE SPECIFIED

REVISIONS			
REV.	DESCRIPTION	DATE	B
A	REVISION PER METRO-DADE NOTES	12-20-2006	R.

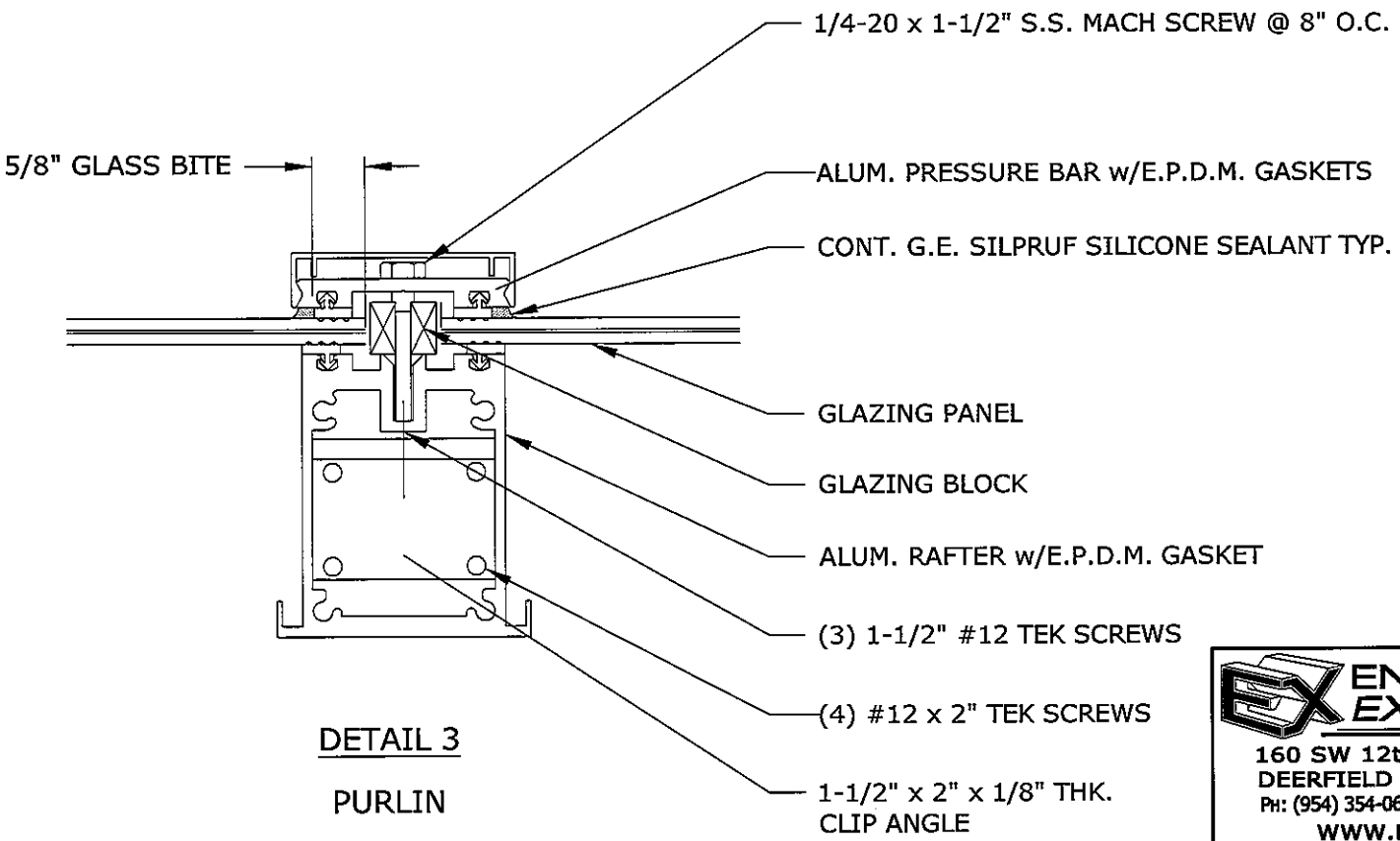

DETAIL 3

PURLIN

PRODUCT REVISED
as complying with the Florida
Building Code
Acceptance No 12-0301.03
Expiration Date 12/10/2016
By
Miami Dade Product Control

ENGINEERING EXPRESS®
160 SW 12th AVENUE, #106
DEERFIELD BEACH, FL 33442
PH: (954) 354-0660 FAX: (954) 354-0443
WWW.ENGEXP.COM
CERT OF AUTH #9885
A FRANK L. BENNARDO, P.E., INC. INNOVATION

FRANK L. BENNARDO, P.E.
FL #REG. LICENSE
No. 46549
FEB 27 2012
STATE OF FLORIDA
PROFESSIONAL ENGINEER
VALID ONLY WITH ORIGINAL ENGINEER SEAL

ALL DIMENSIONS ARE IN INCHES TOLERANCES: UNLESS OTHERWISE SPECIFIED .x: ±.06 .xx: ±.03 .xxx: ±.010 ANGULAR: ±2° FRACTIONAL: ±1/16"	SCALE NONE	MATERIAL NONE	
	Bristol Fiberlite Industries, Inc 401 East Goetz Avenue, Santa Ana, CA 92707 714.540.8950 / FAX 714.545.2364		
DRAWN BY: R.P. DATE: 12-21-06	NAME	Missile Impact Test	
APPROVED BY: DATE:			
	DWG NO.	11-BRS-0001	REV A
	NEXT ASSEMBLY		SHEET 4 OF 8

NOTES: UNLESS OTHERWISE SPECIFIED

REVISIONS			
REV.	DESCRIPTION	DATE	B
A	REVISION PER METRO-DADE NOTES	12-20-2006	R

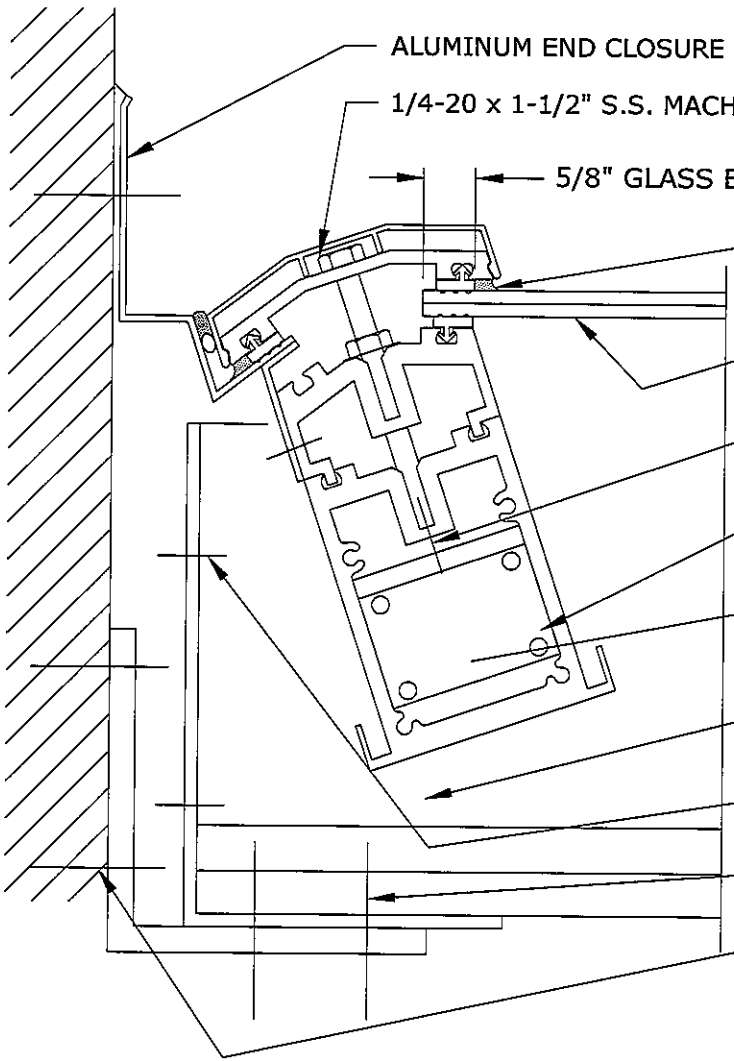

DETAIL 4

HEAD DETAIL

PRODUCT REVISED
as complying with the Florida
Building Code
Acceptance No 12-0301.03
Expiration Date 12/10/2016
By [signature]
Miami Dade Product Control

ENGINEERING EXPRESS®
160 SW 12th AVENUE, #106
DEERFIELD BEACH, FL 33442
PH: (954) 354-0660 FAX: (954) 354-0443
WWW.ENGEXP.COM
CERT OF AUTH #9885
A FRANK L. BENNARDO, P.E., INC. INNOVATION

FRANK L. BENNARDO, P.E.
EL #RE0046549
FRANK L. BENNARDO LICENSE No. 46549 FEB 27 2012 STATE OF FLORIDA PROFESSIONAL ENGINEER
VALID ONLY WITH ORIGINAL ENGINEER SEAL

ALL DIMENSIONS ARE IN INCHES TOLERANCES: UNLESS OTHERWISE SPECIFIED .X: ±.06 .XX: ±.03 .XXX: ±.010 ANGULAR: ±2° FRACTIONAL: ±1/16"		SCALE NONE	MATERIAL NONE
		Bristol Fiberlite Industries, Inc 401 East Goetz Avenue, Santa Ana, CA 92707 714.540.8950 / FAX 714.545.2364	
DRAWN BY: R.P.	DATE: 12-21-06	NAME Missile Impact Test	
APPROVED BY:	DATE:		
		DWG NO. 11-BRS-0001	REV A
		NEXT ASSEMBLY	SHEET 5 OF 8

NOTES: UNLESS OTHERWISE SPECIFIED

REVISIONS			
REV.	DESCRIPTION	DATE	B
A	REVISION PER METRO-DADE NOTES	12-20-2006	R

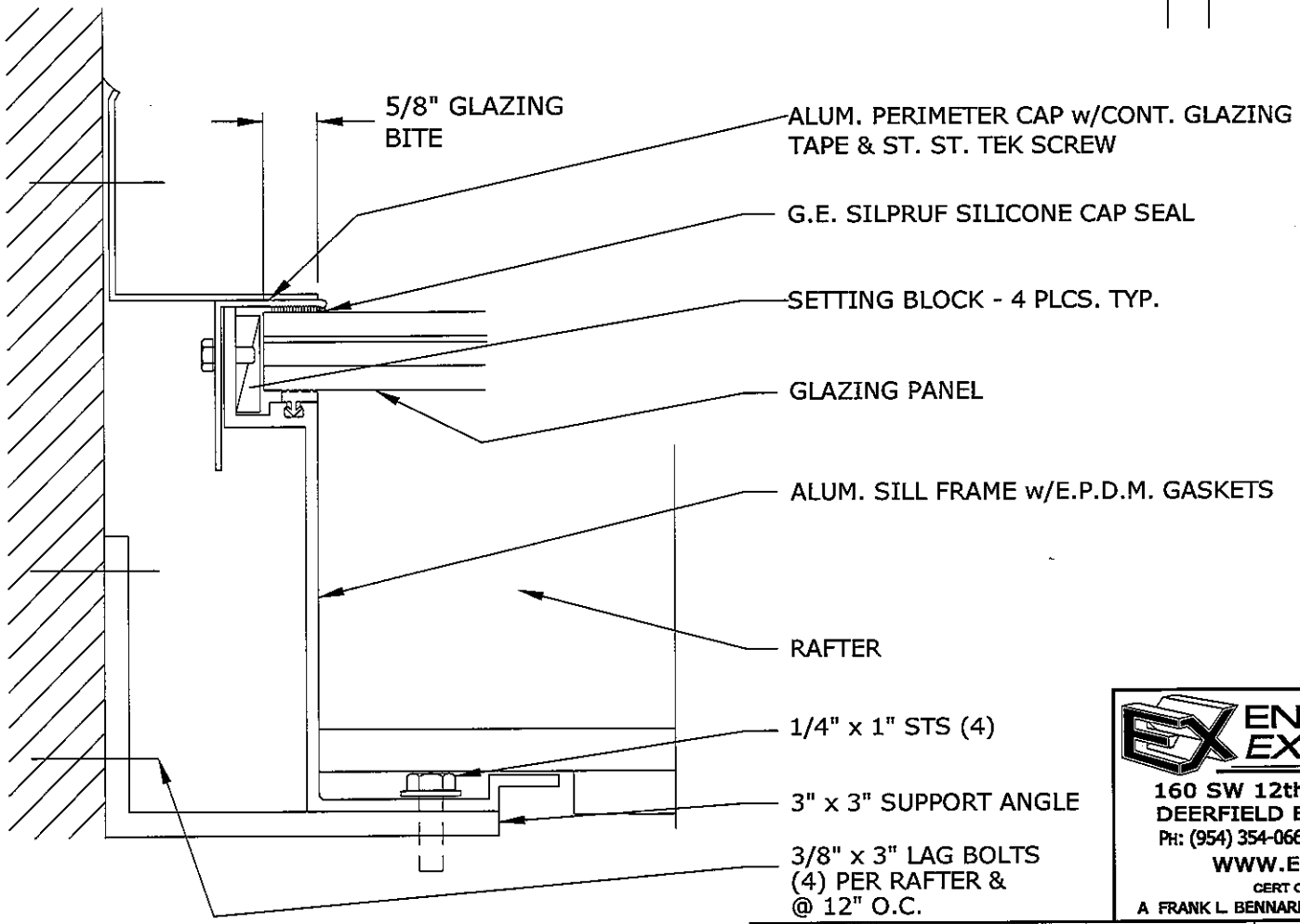

PRODUCT REVISED
as complying with the Florida Building Code
Acceptance No 12-0301.03
Expiration Date 12/10/2016
By [signature]
Miami Dade Product Control

ENGINEERING EXPRESS®
160 SW 12th AVENUE, #106
DEERFIELD BEACH, FL 33442
PH: (954) 354-0660 FAX: (954) 354-0443
WWW.ENGEXP.COM
CERT OF AUTH #9885
A FRANK L. BENNARDO, P.E., INC. INNOVATION

FRANK L. BENNARDO, P.E.
FL #PE0046549
LICENSE No. 46549
STATE OF FLORIDA
FEB 27 2015
VALID ONLY WITH ORIGINAL ENGINEER SEAL
PROFESSIONAL ENGINEER

STRUCTURAL CURB BY OTHERS

DETAIL 5

SILL

NOTES: UNLESS OTHERWISE SPECIFIED

ALL DIMENSIONS ARE IN INCHES TOLERANCES: UNLESS OTHERWISE SPECIFIED .X: ±.06 .XX: ±.03 .XXX: ±.010 ANGULAR: ±2° FRACTIONAL: ±1/16"		SCALE NONE	MATERIAL NONE
		Bristol Fiberlite Industries, Inc 401 East Goetz Avenue, Santa Ana, CA 92707 714.540.8950 / FAX 714.545.2364	
DRAWN BY: R.P.	DATE: 12-21-06	NAME Missile Impact Test	
APPROVED BY:	DATE:		
		DWG NO. 11-BRS-0001	REV A
		NEXT ASSEMBLY	SHEET 6 OF 8

REVISIONS			
REV.	DESCRIPTION	DATE	B
A	REVISION PER METRO-DADE NOTES	12-20-2006	R

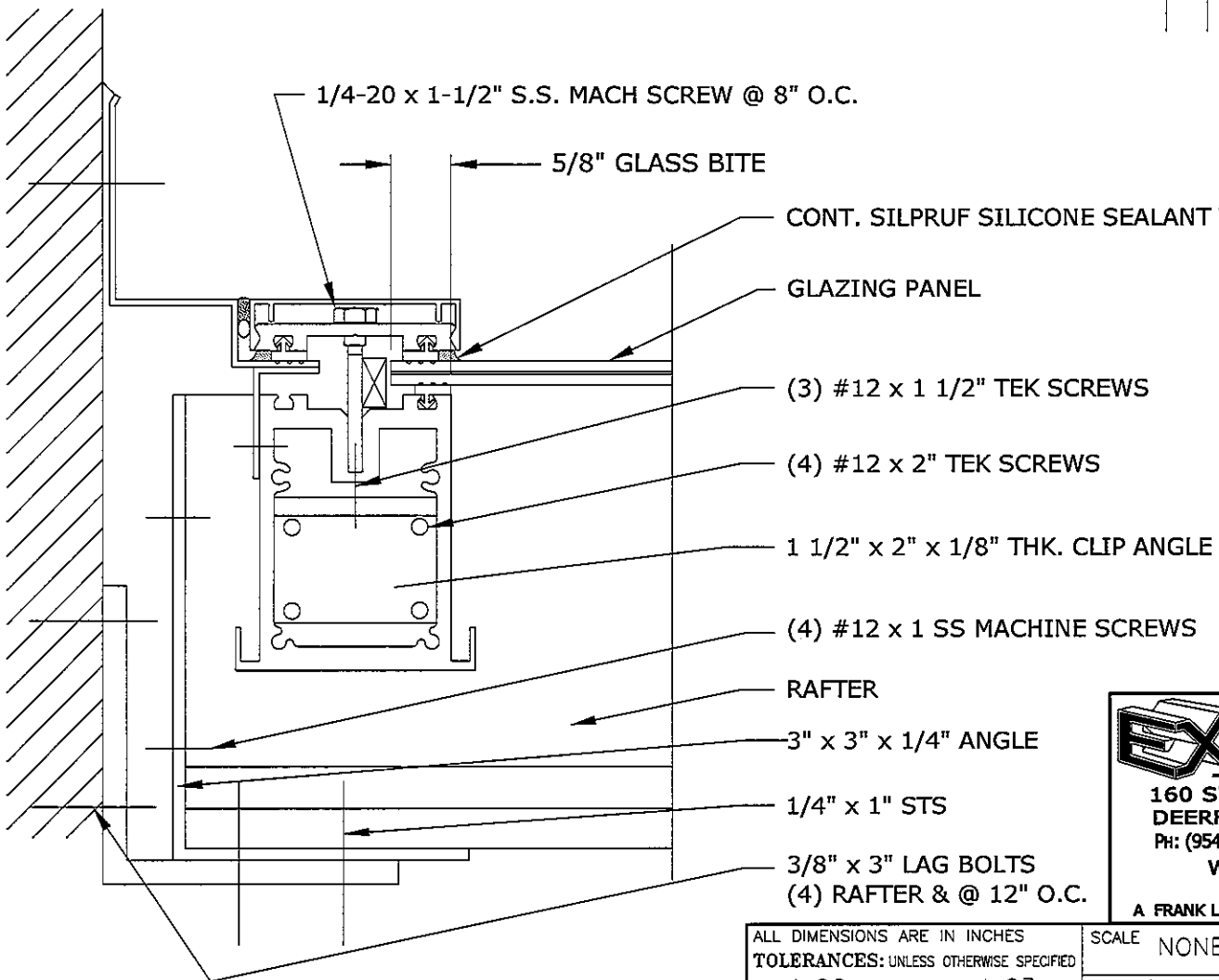

DETAIL 6

SILL TYPE DETAIL

PRODUCT REVISED
as complying with the Florida
Building Code
Acceptance No 12-0301.03
Expiration Date 12/10/2016
By [signature]
Miami Dade Product Control

ENGINEERING EXPRESS®
160 SW 12th AVENUE, #106
DEERFIELD BEACH, FL 33442
PH: (954) 354-0660 FAX: (954) 354-0444
WWW.ENGEXP.COM
CERT OF AUTH #9885
A FRANK L. BENNARDO, P.E., INC. INNOVATION

FRANK L. BENNARDO, P.E.
FL #PE0046549
LICENSE
No. 46549
FEB 27 2012
STATE OF FLORIDA
PROFESSIONAL ENGINEER
VALID ONLY WITH ORIGINAL ENGINEER SEAL

ALL DIMENSIONS ARE IN INCHES TOLERANCES: UNLESS OTHERWISE SPECIFIED .X: ±.06 .XX: ±.03 .XXX: ±.010 ANGULAR: ±2° FRACTIONAL: ±1/16"		SCALE NONE	MATERIAL NONE
		Bristol Fiberlite Industries, Inc. 401 East Goetz Avenue, Santa Ana, CA 92707 714.540.8950 / FAX 714.545.2364	
DRAWN BY: R.P.	DATE: 12-22-06	NAME Missile Impact Test	
APPROVED BY:	DATE:		
		DWG NO. 11-BRS-0001	REV A
		NEXT ASSEMBLY	SHEET 7 OF 8

NOTES: UNLESS OTHERWISE SPECIFIED

REVISIONS			
REV.	DESCRIPTION	DATE	B
A	REVISION PER METRO-DADE NOTES	12-20-2006	R

Miami-Dade County

Large Missile Impact

Resistant

Structural Skylight System

GENERAL NOTES:

1. THE SYSTEM DESCRIBED HEREIN HAS BEEN DESIGNED AND TESTED IN ACCORDANCE WITH THE 2010 FLORIDA BUILDING CODE, FOR USE WITHIN THE HIGH VELOCITY HURRICANE ZONE, PER TAS 201 / 202 / 203 STANDARDS.
2. MAXIMUM DESIGN PRESSURES ARE +51.38 PSF AND -68.5 PSF. POSITIVE AND NEGATIVE DESIGN PRESSURES CALCULATED FOR USE WITH THIS SYSTEM SHALL BE DETERMINED PER SEPARATE ENGINEERING IN ACCORDANCE WITH TH GOVERNING CODE. PRESSURE REQUIREMENTS AS DETERMINED IN ACCORDANCE WITH ASCE 7-10 AND CHAPTER 1609 OF THE 2010 FLORIDA BUILDING CODE SHALL BE LESS THAN OR EQUAL TO THE POSITIVE OR NEGATIVE DESIGN PRESSURE CAPACITY VALUES LISTED HEREIN FOR ANY ASSEMBLY AS SHOWN.
3. DESIGN PRESSURES NOTED HEREIN ARE BASED ON MAXIMUM TESTED PRESSURES DIVIDED BY A 2.0 SAFETY FACTOR
4. ALL ALUMINUM TO BE 6063-T6 ALLOY.
5. MAXIMUM GLAZING PANEL SIZE IS 48" X 67 5/8".
6. GLAZING TO BE LAMINATED GLASS BY OLDCASTLE GLASS: 1/4" HS / 0.090" DUPONT SGP / 1/4" HS.
7. FASTENERS TO BE STAINLESS STEEL.
8. GASKETS TO BE ARROW-SHIM W/DART EPDM WITH DUROMETER RANGE OF 50 TO 60 SHORE "A" FROM TREMCO.
9. ALL SILICON TO BE G.E. SILLPRUF.
10. ALL JOINTS ON PRESSURE BAR AND SNAP COVER TO BE SILICONED.
11. ALL SEPARATION MATERIAL IS REQUIRED WHEN ALUMINUM COMES IN CONTACT WITH STEEL, WOOD OR OTHER DISSIMILAR MATERIALS. THE SEPARATION MATERIAL SHALL BE PER SECTION 2003.8.4 OF THE FLORIDA BUILDING CODE 2004 EDITION.
12. GLAZING BLOCK TO BE NEOPRENE 1/2" X 1/4" WITH DUROMETER OF 90.
13. THIS APPROVAL IS LIMITED TO THE GLAZING PANEL AND IT'S MAXIMUM AREA, THE FULLY ASSEMBLED GLAZING DETAILS TO THE SUPPORTING RAFTERS AND PURLINS AND THE MAXIMUM QUALIFIED DESIGN PRESSURE SHOWN ON THIS DRAWING.
14. THE SYSTEM DETAILED HEREIN IS GENERIC AND DOES NOT PROVIDE INFORMATION FOR A SPECIFIC SITE. FOR SITE CONDITIONS DIFFERENT FROM THE CONDITIONS DETAILED HEREIN, A LICENSED ENGINEER OR REGISTERED ARCHITECT SHALL PREPARE SITE SPECIFIC DOCUMENTS FOR USE IN CONJUNCTION WITH THIS DOCUMENT.
15. THE STRUCTURAL ADEQUACY OF THE SUPPORTING STRUCTURAL MEMBERS (CURB, RAFTERS, PURLINS, AND ALL OTHER FRAMING MEMBERS) IS NOT PART OF THIS APPROVAL AND IT SHALL BE REVIEWED BY THE STRUCTURAL PLANS EXAMINER OF THE CORRESPONDING BUILDING DEPARTMENT ON A JOB SPECIFIC BASIS.

PRODUCT REVISED
as complying with the Florida Building Code
Acceptance No 12-0301.03
Expiration Date 12/10/2016
By [signature]
Miami Dade Product Control

ENGINEERING EXPRESS®
160 SW 12th AVENUE, #106
DEERFIELD BEACH, FL 33442
PH: (954) 354-0660 FAX: (954) 354-0443
WWW.ENGEXP.COM
CERT OF AUTH #9885
A FRANK L. BENNARDO, P.E., INC. INNOVATION

FRANK L. BENNARDO, P.E.
FL #P50046549
LICENSE NO. 46549
FEB 27 2012
STATE OF FLORIDA
PROFESSIONAL ENGINEER
VALID ONLY WITH ORIGINAL ENGINEER SEAL

ALL DIMENSIONS ARE IN INCHES TOLERANCES: UNLESS OTHERWISE SPECIFIED .X: ±.06 .XX: ±.03 .XXX: ±.010 ANGULAR: ±2° FRACTIONAL: ±1/16"		SCALE NONE	MATERIAL NONE
		Bristol Fiberlite Industries, Inc. 401 East Goetz Avenue, Santa Ana, CA 92707 714.540.8950 / FAX 714.545.2364	
DRAWN BY: R.P.	DATE: 12-22-06	NAME Missile Impact Test	
APPROVED BY:	DATE:		
		DWG NO. 11-BRS-0001	REV A
		NEXT ASSEMBLY	SHEET 8 OF 8

NOTES: UNLESS OTHERWISE SPECIFIED