MIAMI-DADE COUNTY
DEPARTMENT OF PERMITTING, ENVIRONMENT, AND REGULATORY AFFAIRS (PERA)
BOARD AND CODE ADMINISTRATION DIVISION

NOTICE OF ACCEPTANCE (NOA)

MIAMI-DADE COUNTY
PRODUCT CONTROL SECTION
11805 SW 26 Street, Room 208
Miami, Florida 33175-2474
T (786) 315-2590 F (786) 315-2599
www.miamidade.gov/pera/

Ingersoll-Rand
6810 Hillsdale Court
Indianapolis, IN 46250

SCOPE:

This NOA is being issued under the applicable rules and regulations governing the use of construction materials. The documentation submitted has been reviewed and accepted by Miami-Dade County PERA -Product Control Section to be used in Miami Dade County and other areas where allowed by the Authority Having Jurisdiction (AHJ).

This NOA shall not be valid after the expiration date stated below. The Miami-Dade County Product Control Section (In Miami Dade County) and/or the AHJ (in areas other than Miami Dade County) reserve the right to have this product or material tested for quality assurance purposes. If this product or material fails to perform in the accepted manner, the manufacturer will incur the expense of such testing and the AHJ may immediately revoke, modify, or suspend the use of such product or material within their jurisdiction. PERA reserves the right to revoke this acceptance, if it is determined by Miami-Dade County Product Control Section that this product or material fails to meet the requirements of the applicable building code.

This product is approved as described herein, and has been designed to comply with the Florida Building Code, including the High Velocity Hurricane Zone.

DESCRIPTIO: IR / Steelcraft Double Flush Outswing Commercial Steel Doors w / wo Panic Exit Devices

APPROVAL DOCUMENT: Drawing No "**IRF-D07**" Rev **J**, titled "Flush Outswing Double Doors", sheets 1 through 11 of 11, prepared by the manufacturer, dated 05-27-07 and last revised on 04/14/10, signed and sealed by Thomas Gordon,, P. E. bearing the Miami-Dade County Product Control Revision stamp with the Notice of Acceptance number and expiration date by the Miami-Dade County Product Control section.

MISSILE IMPACT RATING: Large Missile Impact Resistant

Limitations:

1. See Design Pressures, Sizes, Hardware and Water infiltration limitation sheet 1& 2 of the drawings.
2. Option (A) Polystyrene and Expanded polystyrene foam core options (F) in sheet 4 are limited to Atlas EPS (min ρ =1#/ft^3) and Polyisocyanurate El-Foam–H200 (polyurethane, min ρ =2#/ft^3) by Elliott Company.
3. Electrical/Electronic function is not part of this approval, such functions to be reviewed and approved by AHJ.

LABELING: Each unit shall bear a permanent label with the manufacturer's name or logo, Cincinnati, Ohio and series and following statement: "Miami-Dade County Product Control Approved", noted herein.

RENEWAL of this NOA shall be considered after a renewal application has been filed and there has been no change in the applicable building code negatively affecting the performance of this product.

TERMINATION of this NOA will occur after the expiration date or if there has been a revision or change in the materials, use, and/or manufacture of the product or process. Misuse of this NOA as an endorsement of any product, for sales, advertising or any other purposes shall automatically terminate this NOA. Failure to comply with any section of this NOA shall be cause for termination and removal of NOA.

ADVERTISEMENT: The NOA number preceded by the words Miami-Dade County, Florida, and followed by the expiration date may be displayed in advertising literature. If any portion of the NOA is displayed, then it shall be done in its entirety.

INSPECTION: A copy of this entire NOA shall be provided to the user by the manufacturer or its distributors and shall be available for inspection at the job site at the request of the Building Official.

This NOA **revises NOA # 10-0209.06** and consists of this page 1 and evidence pages E-1, as well as approval document mentioned above.

The submitted documentation was reviewed by **Ishaq I. Chanda, P.E.**

MIAMI-DADE COUNTY APPROVED
5/23/12

Ingersoll-Rand

NOTICE OF ACCEPTANCE: EVIDENCE SUBMITTED

A. DRAWINGS

1. Manufacturer's parts and sections drawings (submitted under file # **10-0209.06**)
2. Drawing No "**IRF-D07**" Rev **J**, titled "Flush Outswing Double Doors", sheets 1 through 11 of 11, prepared by the manufacturer, dated 05-27-07 and last revised on 04/14/10, signed and sealed by Thomas Gordon, P.E.

B. TESTS (Submitted file # **10-0209.06/ 07-0829.03**)

1. Test report on 1) Air Infiltration Test, per TAS 202-94
   2) Water Resistance Test per FBC TAS 202-94(Not conducted)
   3) Uniform Static Air Pressure Test, Loading per TAS 202-94
   4) Large Missile Impact Test per FBC, TAS 201-94
   5) Cyclic Wind Pressure Loading per FBC, TAS 203-94
   6) Forced Entry Test, per PA 202-94

Along with manufacturer's parts and section drawings of double flush outswing steel doors, marked by National Certified Testing Lab, Test Reports No. **NCTL-210- 3580-2,** dated March 25, 2009, signed and sealed by Gerry Ferrara, P. E.

2. Test report on (Submitted under file # **07-0829.03**)
   1) Air Infiltration Test, per TAS 202-94
   2) Uniform Static Air Pressure Test, Loading per TAS 202-94
   3) Large Missile Impact Test per FBC, TAS 201-94
   4) Cyclic Wind Pressure Loading per FBC, TAS 203-94
   5) Forced Entry Test, per PA 202-94

Along with manufacturer's parts and section drawings of double flush outswing steel doors, marked by Certified Testing Lab, Test Reports No(s). **CTLA-776W** dated February 20, 2002, **CTLA-776W1** dated April 25, 2002, **CTLA-776W-2, 3** dated April 20, 2002, **CTLA-1035W-2** dated Feb. 11, 2003, **CTLA-1086-W** dated Nov. 17, 2003, all signed and sealed by Ramesh Patel, P.E.

3. Test report (transferred from file # **07-0829.03**)
   1) Air Infiltration Test, per TAS 202-94
   2) Uniform Static Air Pressure Test, Loading per TAS 202-94
   3) Large Missile Impact Test per FBC, TAS 201-94
   4) Cyclic Wind Pressure Loading per FBC, TAS 203-94
   5) Forced Entry Test, per TAS 202-94

Along with manufacturer's parts and section drawings of Flush outswing double steel doors, marked by Certified Testing Lab, Test Reports No(s). **NCTL-210-3357-1** dated Dec 28, 2006, signed and sealed by Gerard J. Ferrara, P.E.

4. Additional test reports
   1) Uniform Static Air Pressure Test, Loading per FBC TAS 202-94.
   2) Water Resistance Test per FBC TAS 202-94

Along with marked-up drawings and installation diagram of double steel commercial doors, prepared by National Certified Testing Laboratories Inc., Test Report No. **NCTL- 210-03-0514-11,** dated August 31, 2004, **NCTL- 210-3044-1,** dated August 31, 2004, **NCTL- 210-3549-1,** dated August 26, 2008 and **NCTL- 210-3511-1** dated 04/09/08, all signed and sealed by Gerard J. Ferrara, P. E.

Note: Test report No(s): NCTL210-3549-1 and NCTL-210-3511-1 have been revised by an addendum letter, issued by Lab, dated Feb. 04, 2009, signed & sealed by Gerard J. Ferrara, P. E.

4. Reference test report No.CTLA-1107W for strap anchor qualification.

Ishaq I. Chanda

Ishaq I. Chanda, P.E.
Product Control Examiner
NOA No 12-0305.13
Expiration Date: May 05, 2015
Approval Date: May 31, 2012

NOTICE OF ACCEPTANCE: EVIDENCE SUBMITTED

C. CALCULATIONS (Submitted file # **10-0209.07/ 07-0829.04**)

1. Statement of compliance & anchor verification evaluation report, dated 04-23-2007 and last revised on 07/14/2008, prepared, signed & sealed by Thomas Gordon., P.E.
2. Evaluation report for Hinges dated 09/01/04, prepared, signed & sealed by Thomas Gordon., P.E.

D. QUALITY ASSURANCE BY

1. Miami Dade Department of Permitting, Environment, and Regulatory Affairs (PERA).

E. MATERIAL CERTIFICATIONS (submitted under file # **10-0209.06**)

1. Test Report No. **03NK2370/R145081**, January 21, 2003, issued by Underwriters laboratories Inc for "Surface Burning Characteristics of Building material" per ASTME84-00a and self Ignition per ASTM1929D for "Elfoam H200", issued to Elliott Co. of Indianapolis Inc.
2. Tensile test report # CTLA-776W (0194H), dtd 02/25/02 prepared by CTL Architectural Division, sheet samples, tested per ASTM E8, signed & sealed by Ramesh Patel, P.E.
3. Tensile Test report No. A103W1-Test 1, 2 & 3 dated 23 APR 03 per ASTME-8 for steel face sheet, prepared by Certified Testing laboratory, signed and sealed by Ramesh Patel, P.E.
4. Test Report No. **NER-384**, reissued dated May 01, 1994, issued by National Evaluation Service Inc to Huntsman Chemical Corporation for "Expanded Polystyrene EPS" for grade 86 & grade 54 for "Surface Burning Characteristics of Building material" per ASTME 84.
5. Test Report No. **16206-122543 (1015P200(3))**, dated November 29, 2004 for " Surface Burning Characteristics of Building material" per ASTME84 and self Ignition per ASTM1929D for "Polyisocyanurate" issued by Omega Point Laboratories, Inc. to Elliot Company, Indianapolis, Indiana.

F. STATEMENTS

1. Letter of conformance to FBC 2010 "No financial interest" dated 02/15/12, signed and sealed by Gordon Thomas, P.E.
2. Statement letter of conformance to FBC 2007 and no financial interest, dated Feb 03, 2010, prepared, signed and sealed by Gordon Thomas, P.E.
3. Laboratory Compliance statement issued as part of test report.
4. Addendum letter dated 3/15/10 for test report NCTL210-3645-1, issued by National certified Testing lab.
5. Letter of certification dated 04/20/10, issued by Ingersoll-Rand for electronic CO lock series mechanical /functional parts same as AD, ND and AD-M series.

G. OTHER

1. This NOA **revises NOA # 10-0209.06,** expiring on 05/05/15.
2. Previously consolidates NOA (s) associated with this files are NOA #10-0209.07, 07-0829.04, 02-0712.01, 02-0712.03, 03-0908.03, 04-0203.03, 04-0303.03 and 05-0103.01.
3. Consolidation Test proposal # **06-2468**, dated 04/27/07 approved by BCCO.
4. IR Locks & Panic devices brochures / catalogs supplied by manufacturer.

Ishaq I. Chanda

Ishaq I. Chanda, P.E.
Product Control Examiner
NOA No 12-0305.13
Expiration Date: May 05, 2015
Approval Date: May 31, 2012

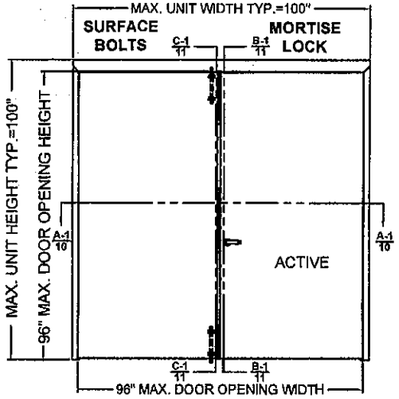

1	DESIGN PRESSURE RATING, PSF	
	WHERE WATER INFILTRATION REQUIREMENT IS NEEDED	WHERE WATER INFILTRATION REQUIREMENT IS NOT NEEDED
	±75 SEE TABLE 3 ON SHT. 5	±75 SEE TABLE 4 ON SHT. 5

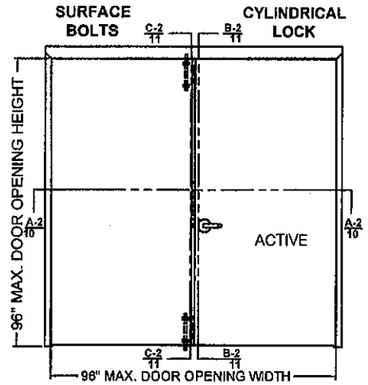

2	DESIGN PRESSURE RATING, PSF	
	WHERE WATER INFILTRATION REQUIREMENT IS NEEDED	WHERE WATER INFILTRATION REQUIREMENT IS NOT NEEDED
	±55 SEE TABLE 3 ON SHT. 5	±55 SEE TABLE 4 ON SHT. 5

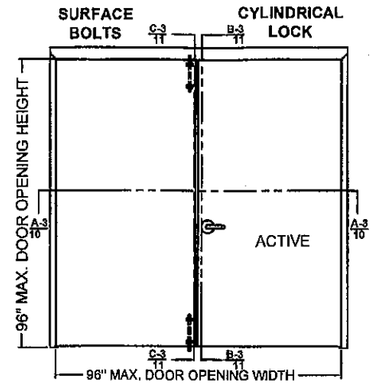

3	DESIGN PRESSURE RATING, PSF	
	WHERE WATER INFILTRATION REQUIREMENT IS NEEDED	WHERE WATER INFILTRATION REQUIREMENT IS NOT NEEDED
	±65 SEE TABLE 3 ON SHT. 5	±65 SEE TABLE 4 ON SHT. 5

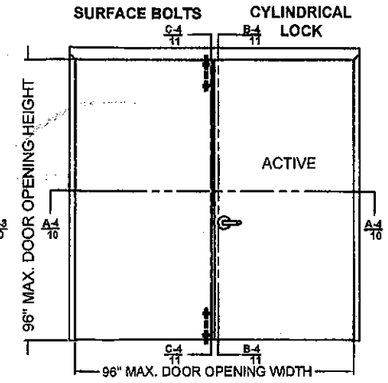

4	DESIGN PRESSURE RATING, PSF	
	WHERE WATER INFILTRATION REQUIREMENT IS NEEDED	WHERE WATER INFILTRATION REQUIREMENT IS NOT NEEDED
	±75 SEE TABLE 3 ON SHT. 5	±75 SEE TABLE 4 ON SHT. 5

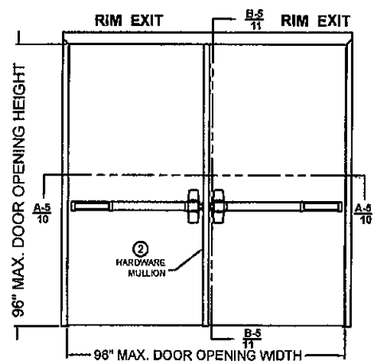

5	DESIGN PRESSURE RATING, PSF	
	WHERE WATER INFILTRATION REQUIREMENT IS NEEDED	WHERE WATER INFILTRATION REQUIREMENT IS NOT NEEDED
	±75 SEE TABLE 3 ON SHT. 5	±90 SEE TABLE 4 ON SHT. 5

THREE POINT LATCHING HARDWARE MULLION

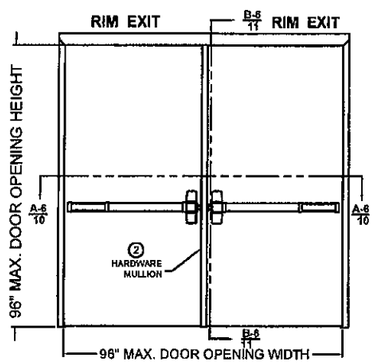

6	DESIGN PRESSURE RATING, PSF	
	WHERE WATER INFILTRATION REQUIREMENT IS NEEDED	WHERE WATER INFILTRATION REQUIREMENT IS NOT NEEDED
	±70 SEE TABLE 3 ON SHT. 5	±70 SEE TABLE 4 ON SHT. 5

THREE POINT LATCHING FIXED HOLLOW METAL MULLION

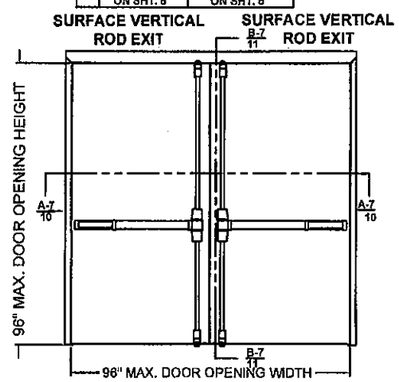

7	DESIGN PRESSURE RATING, PSF	
	WHERE WATER INFILTRATION REQUIREMENT IS NEEDED	WHERE WATER INFILTRATION REQUIREMENT IS NOT NEEDED
	±70 SEE TABLE 3 ON SHT. 5	±70 SEE TABLE 4 ON SHT. 5

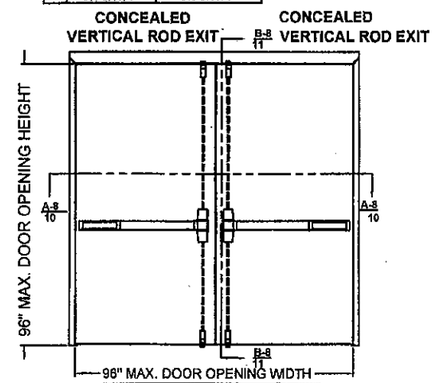

8	DESIGN PRESSURE RATING, PSF	
	WHERE WATER INFILTRATION REQUIREMENT IS NEEDED	WHERE WATER INFILTRATION REQUIREMENT IS NOT NEEDED
	±70 SEE TABLE 3 ON SHT. 5	±70 SEE TABLE 4 ON SHT. 5

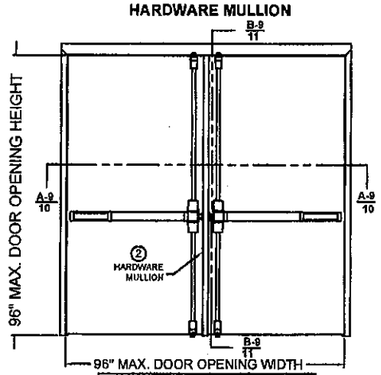

9	DESIGN PRESSURE RATING, PSF	
	WHERE WATER INFILTRATION REQUIREMENT IS NEEDED	WHERE WATER INFILTRATION REQUIREMENT IS NOT NEEDED
	±70 SEE TABLE 3 ON SHT. 5	±70 SEE TABLE 4 ON SHT. 5

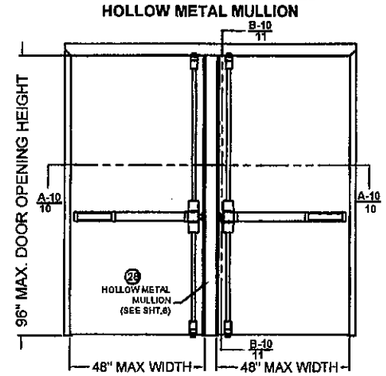

10	DESIGN PRESSURE RATING, PSF	
	WHERE WATER INFILTRATION REQUIREMENT IS NEEDED	WHERE WATER INFILTRATION REQUIREMENT IS NOT NEEDED
	±70 SEE TABLE 3 ON SHT. 5	±70 SEE TABLE 4 ON SHT. 5

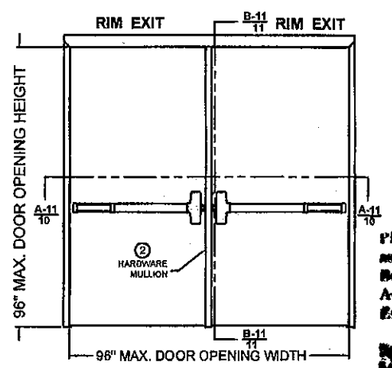

11	DESIGN PRESSURE RATING, PSF	
	WHERE WATER INFILTRATION REQUIREMENT IS NEEDED	WHERE WATER INFILTRATION REQUIREMENT IS NOT NEEDED
	+70/-55 SEE TABLE 3 ON SHT. 5	+70/-55 SEE TABLE 4 ON SHT. 5

Gordon Thomas, P.E.
3759 Blossom Court
Mason, OH 45040
Florida # 46718

4/14/10 Date

REVISIONS

LTR	DESCRIPTION		DATE	APPROVED
A	APPROVAL DWG	YMF	05/20/07	
B	REVISED DWG	RAP	10/12/07	
C	REVISED DWG	RAP	12/03/07	
D	REVISED DWG	YMF	01/15/08	
E	REVISED DWG	YMF	02/28/08	
F	REVISED DWG	YMF	05/30/08	
G	REVISED PER_MDBCCO	YMF	02/06/09	
H	REVISED DWG	YMF	02/01/10	
J	REVISED DWG	YMF	04/06/10	

DETAIL 'C' MEETING DOOR EDGES

DOOR CONFIGURATIONS: 1, 2, 3, 4
Z-ASTRAGAL ON
INACTIVE LEAF

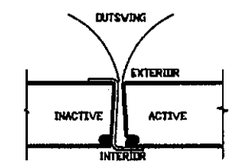

DOOR CONFIGURATIONS: 5, 6, 9 & 11
HARDWARE MULLION

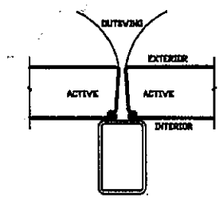

DOOR CONFIGURATIONS: 7 & 8
NO ASTRAGAL / NO MULLION
BOTH DOORS ACTIVE

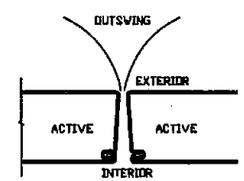

DOOR CONFIGURATION: 10
FIXED HOLLOW METAL MULLION

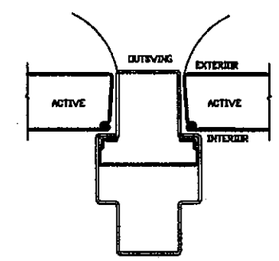

PRODUCT RENEWED
as complying with the Florida Building Code
Acceptance No 10-0209.06
Expiration Date MAY 5, 2015
By Ishaq J. Chanda
Miami Dade Product Control Division

NOTES:
1. INTERIOR VIEWS ARE SHOWN FOR ALL ELEVATIONS
2. SEE TABLE 1 ON SHEET 2 FOR HARDWARE APPLICATIONS AND LIMITATIONS
3. SEE SHEET 3 FOR HINGE REQUIREMENTS
4. SEE SHEET 4 FOR ANCHORING TYPES AND LIMITATIONS
5. SEE SHEET 5 FOR WEATHERSTRIPPING INSTALLATION DETAILS AND LIMITATIONS

PRODUCT REVISED
as complying with the Florida Building Code
Acceptance No 12-0305.13
Expiration Date MAY 05, 2015
By Ishaq J. Chanda
Miami Dade Product Control

BEND RADIUS

THIRD ANGLE PROJECTION

DRAWN	YMF	DATE 05/20/07
CHECKED		
APPROVED		
ENG. APPVL	JPD	10/12/07

Ingersoll Rand
Security Technologies

TITLE MIAMI-DADE PRODUCT APPROVAL

Ingersoll Rand
FLUSH OUTSWING, DOUBLE DOORS AND HARDWARE CONFIGURATIONS.

SIZE	FLAT	DWG NO.	REV
		IRFD07	J
SCALE: NTS	AUTOCAD		SHEET 1 OF 11

TABLE 1.

Door Configuration	Maximum Design Pressure, PSF		Maximum Door Opening Size, In.		Locking Hardware Description				Comments
	Positive	Negative	Width	Height	Hardware Family	Model/Series	Strike Models	IR Brand	
1	75	75	96	96	Mortise Lock	L/LV9400/AD MS	10-072	Schlage	Function with deadbolt, 3/4" min. throw latch & 1" min throw deadbolt
						M	ANSI	Falcon	
						5500	ANSI	Locknetics/Schlage	w/autobolt, 3/4" min. throw
2	55	55	96	96	Cylindrical Lock	AL	10-025	Schlage	1/2" throw latch
3	65	65	96	96	Cylindrical Lock	D/ND/AD CYL	10-025	Schlage	1/2" throw latch
4	75	75	96	96	Cylindrical Lock	D/ND/AD CYL	10-025	Schlage	3/4" throw latch
						T	ANSI	Falcon	3/4" throw latch
						5100	ANSI	Locknetics/Schlage	3/4" throw latch
5	90 SEE NOTE 4.	90 SEE NOTE 4.	96	96	Rim Exit Device	XP 98/99(F)	909/954	Von Duprin	for pairs use (KR)9954 mullion by Von Duprin
6	70	70	96	96	Rim Exit Device	98/99(F)	299F/499F	Von Duprin	for pairs use (KR)9954 mullion by Von Duprin
						88-F	268	Von Duprin	
						(F)DL-18-R	F570	Monarch	
7	70	70	96	96	Surface Vertical Rod Exit Device	98/9927(F)	299F/499F Top, 304L/248L4 Bottom	Von Duprin	
						(F)18-V	3788 Top, 2130 Bottom	Monarch	
						(F)25-V	3788 Top, 2130 Bottom	Falcon	
8	70	70	96	96	Concealed Vertical Rod Exit Device	98/9947-F	338 Top, 385A Bottom	Von Duprin	
						F-18-C	4188 Top, 2130 Bottom	Monarch	
						F-25-C	4188 Top, 2130 Bottom	Falcon	
9	70	70	96	96	Three-Point Latching Device	98/9957(F)	299F/499F Top/Middle, 304L/248L4 Bottom	Von Duprin	for pairs use (KR)9954 mullion by Von Duprin
10	70	70	48	96		98/9957(F)	299F/499F Top/Middle, 304L/248L4 Bottom	Von Duprin	See note #2
11	70	55	96	96	Rim Exit Device	(F)25-R	299F/499F	Falcon	for pairs use (KR)9954 mullion by Von Duprin

REVISIONS				
LTR	DESCRIPTION		DATE	APPROVED
A	APPROVAL DWG	YMF	05/20/07	
B	REVISED DWG	RAP	10/12/07	
C	REVISED DWG	RAP	12/03/07	
D	REVISED DWG	YMF	01/16/08	
E	REVISED DWG	YMF	02/28/08	
F	REVISED DWG	YMF	05/30/08	
G	REVISED PER_MDBCCO	YMF	02/06/09	
H	REVISED DWG	YMF	03/18/09	
J	REVISED DWG	YMF	04/06/10	

PRODUCT REVISED
as complying with the Florida Building Code
Acceptance No 12-0305.13
Expiration Date 5/5/15
By Ishaq I. Chanda
Miami Dade Product Control

Gordon Thomas, P.E. Date
3759 Blossom Court
Mason, OH 45040
Florida # 49718

PRODUCT RENEWED
as complying with the Florida Building Code
Acceptance No 10-0209.06
Expiration Date MAY 5, 2015
By Ishaq I. Chanda
Miami Dade Product Control Division

NOTES:

1. FOR DOOR CONFIGURATIONS 1, 2, 3, & 4, INACTIVE LEAF REQUIRES IVES SB360 SURFACE BOLTS IN TOP AND BOTTOM
2. DOOR CONFIGURATION 10 IS USING FIXED HOLLOW METAL MULLION BETWEEN TWO DOORS
3. SEE SHEETS 6, 7 & 8 FOR LOCKING HARDWARE AND HARDWARE MULLION DETAILS
4. DOOR CONFIGURATION 5 IS RATED FOR MAXIMUM DESIGN PRESSURE ±90 PSF WHEN WATER INFILTRATION REQUIREMENT IS NOT NEEDED, WHEN WATER INFILTRATION REQUIREMENT IS NEEDED, IT IS RATED UP TO +75 PSF WHEN USED WITH SEALS BY ZERO INTERNATIONAL AND NATIONAL GUARD PRODUCTS (NGP) (SEE TABLE 3 ON SHT.5)
5. SCHLAGE AL-SERIES CYLINDRICAL LOCK (door configuration 2) IS LIMITED TO ±55 PSF MAXIMUM DESIGN PRESSURE

BEND RADIUS

THIRD ANGLE PROJECTION

DRAWN YMF	DATE 05/20/07
CHECKED	
APPROVED	
ENG. APPVL JPD	10/12/07

Ingersoll Rand
Security Technologies

TITLE MIAMI-DADE PRODUCT APPROVAL

FLUSH OUTSWING DOORS AND HARDWARE CONFIGURATIONS
IR COMMERCIAL DOOR OPENING DOUBLE FLUSH DOORS.

SIZE	FLAT	DWG NO.	REV
		IRFD07	J
SCALE NTS	AUTOCAD		SHEET 2 OF 11

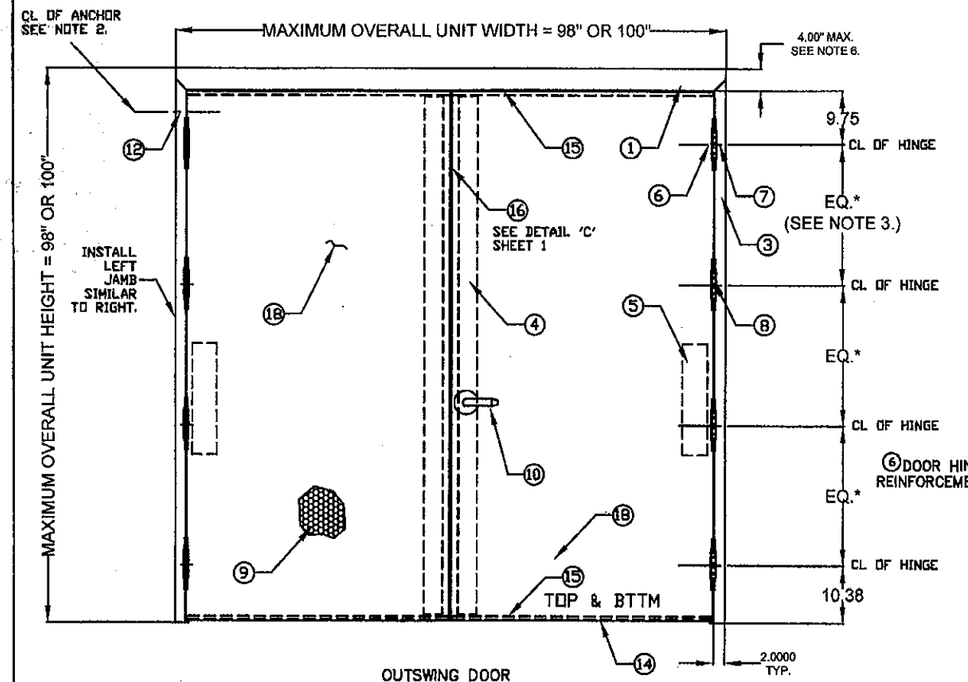

OUTSWING DOOR
(EXTERIOR VIEW)
ALL DIMENSIONS TYPICAL UNLESS SPECIFIED OTHERWISE

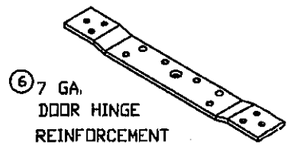

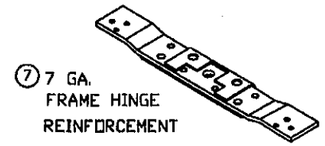

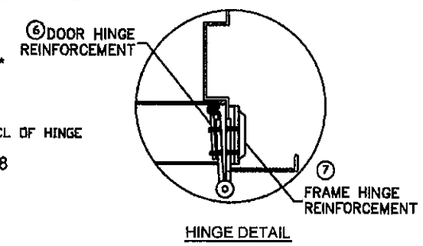

HINGE DETAIL

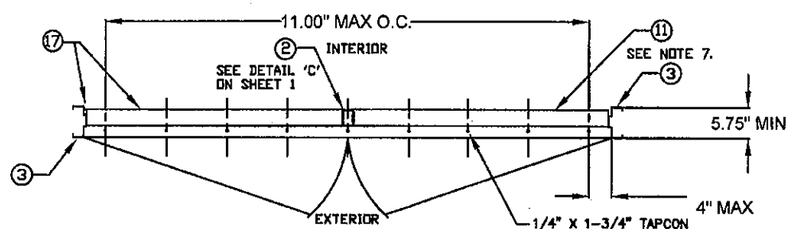

TYPICAL SILL INSTALLATION (SEE SHT.4)

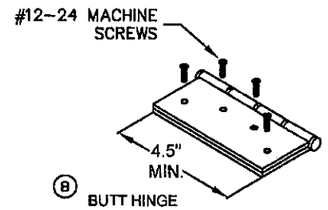

⑧ BUTT HINGE
MIN SIZE 4.5" X 4.5"
STD. WT. (.134" MIN.)
IVES 5BB1/3CB1, HAGER 1279
STANLEY F179/1900

⑧ CONTINUOUS HINGE

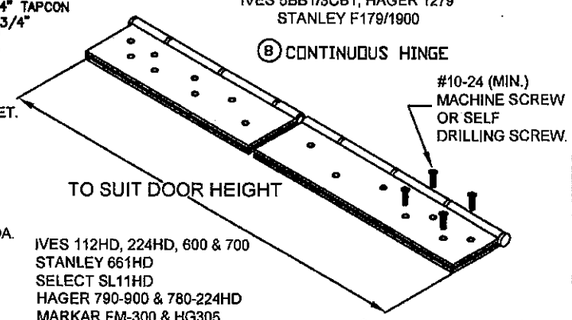

IVES 112HD, 224HD, 600 & 700
STANLEY 661HD
SELECT SL11HD
HAGER 790-900 & 780-224HD
MARKAR FM-300 & HG305
ABH A500 & A240HD

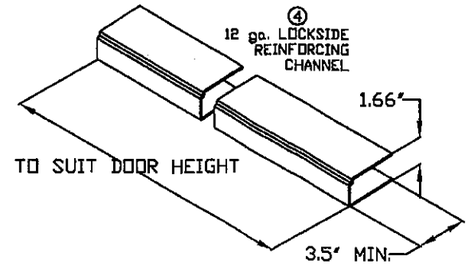

NOTES:
1. WEATHERSTRIPPING
   - INSTALL PER SHT.5.
2. ANCHOR REQUIREMENTS: SEE SHEET 4 FOR APPROVED ANCHOR INSTALLATION REQUIREMENTS. WHEN FOUR-SIDED FRAME IS USED SILL FRAME SECTION ANCHORED PER SILL DETAIL ON THIS SHEET.
3. HINGE REQUIREMENTS:
   FOR DOOR OPENING UP TO 90" HIGH - MIN. (3) HINGES
   FOR DOOR OPENING OVER 90" - 96" HIGH - MIN. (4) HINGES
   LOCATIONS: 9.75" FROM RABBET IN HEAD TO CL OF TOP HINGE
   10.38" FROM FLOOR TO CL OF BOTTOM HINGE, EQUALLY SPACED IN BETWEEN.
4. SEE SHEET 6 FOR AVAILABLE STANDARD OPENING SIZES AND SPECIFICATIONS.
5. HARDWARE INSTALLATION AS PER MANUFACTURER'S INSTRUCTIONS, AS APPROVED PER THIS NOA.
6. 4" FACE HEAD IS AVAILABLE.
7. APPLY CAULK AS NEEDED.
8. SEE SHEET 10 FOR SECTION A-A, SEE SHEET 11 FOR SECTIONS B-B AND C-C.
9. EXIT HARDWARE OPTIONS:
   FOR 98/99 & XP98/99 SERIES - FUNCTIONS E, RX, LX, SS, EL, CX, F
   TRIM: ALL APLICABLE TRIMS AVAILABLE.
   FOR 88-F SERIES - FUNCTIION E
   TRIM: ALL APPLICABLE TRIMS AVAILABLE.
   PN MODEL OFFERED.
   FOR 2670 GUARD-X
   TRIM: ALL APPLICABLE TRIMS AVAILABLE.
   FOR 18-R, 18-C & 18-V SERIES - FUNCTIONS DL, EA, HWEA, DE, ELR F, DM, LM, AE, LK & SM
   FOR 25-R, 25-C & 25-V SERIES - FUNCTIONS DM,LM, KOR, ED, EL, EA, FSA, FSE, HWEA
   TRIM: ALL APPLICABLE TRIMS AVAILABLE
10. PN MODEL OFFERED.
11. ELECTRICAL INSTALLATION IS UNDER SEPARATE APPROVAL AND MUST BE REVIEWED BY CORRESPONDING AUTHORITY.
12. OPTIONAL POWER TRANSFERS, MONITORING SWITCHES, SUPPLEMENTARY MAGNETIC LOCKS MAY BE USED AS ALLOWED BY CODE AND IT DOES NOT EFFECT THE MECHANICAL PROPERTIES OF EXIT DEVICE AND/OR INHIBIT EGRESS.
13. ITEMS 19 THROUGH 23 REQUIRED ONLY IF WATER INFILTRATION IS NEEDED.
14. QUANTITY WILL INCREASE WHEN USED WITH HOLLOW METAL MULLION. SEE SHT 6 FOR DETAILS.

Gordon Thomas, P.E.
3759 Blossom Court
Mason, OH 45040
Florida # 46716
9/14/10
Date

PRODUCT RENEWED
as complying with the Florida Building Code
Acceptance No. 10-0209.06
Expiration Date MAY 15, 2015
By Ishaq I. Chanda
Miami Dade Product Control Division

PRODUCT REVISED
as complying with the Florida Building Code
Acceptance No. 12-0305.13
Expiration Date 5/15/15
Ishaq I. Chanda
Miami Dade Product Control

REVISIONS

LTR	DESCRIPTION		DATE	APPROVED
A	APPROVAL DWGS.	YMF	05/20/07	
B	REVISED DWGS.	RAP	10/12/07	
C	REVISED DWGS.	RAP	12/03/07	
D	REVISED DWGS.	YMF	01/16/08	
E	REVISED DWGS.	YMF	02/28/08	
F	REVISED DWGS.	YMF	05/30/08	
G	REVISED PER_MDBCCO	YMF	02/06/09	
H	REVISED DWG	YMF	02/01/10	
J	REVISED DWG	YMF	04/06/10	

TABLE 2

	QUANTITY	DESCRIPTION	MATERIAL	SIZE
1	1	HEAD SEE SHT 6 ASTM A366	.053" MIN. STL	MAX. 100"
2	1	VON DUPRIN (KR) 9954 HDWE MULLION USED W/RIM HDWE	.123" A500 STL	MAX. 96" HEIGHT.
3	2	HINGE JAMB SEE SHT 6 ASTM A366	.053" MIN. STL	MAX. 100" HEIGHT.
4	2	LOCK SIDE REINFORCEMENT CHANNEL	.093" MIN. STL	3.5 X 93.44 MAX
5	2	HINGE SIDE PANIC REINFORCEMENT	.067" MIN. STL	MAX. 20"
6	NOTE 3.	HINGE REINFORCEMENT DOOR ASTM A621	.167" MIN. STL.	1.28" X 9.19"
7	NOTE 3.	HINGE REINFORCEMENT FRAME ASTM A621	.167" MIN. STL.	1.3" X 9.187" MAX.
8	NOTE 3.	4.5" X 4.5" BUTT HINGES (SEE SHT.3)	.134 MIN.	(8) #12-24 MS PER HINGE
		OPTIONAL CONTINUOUS HINGE (SEE SHT.3)	.067" MIN. STL/.12 ALUM	MAX. 95"
9	2	CORE MATERIAL (SHT 4)	A) HONEYCOMB B) STEEL STIFFENED C/F) POLYSTYRENE D/F) POLYURETHANE/POLYISOCYANURATE E) MINERAL BOARD TEMPERATURE RISE CORE	
10	2	LOCKING HARDWARE - SEE SHEETS 2, 7 & 8		
11	1	THRESHOLD SILL W/BUMPER GASKET (SEE TAB. 3&4 ON SHT.5) 1) ZERO 566A 2) NAT'L GUARD 950A	.100" ALUM. 6063 T5	5.50"X0.5"X96"MAX.
12	NOTE 2.	JAMB ANCHOR ASTM A924	SEE SHEET 6	
13	NOTE 14.	PSD74 WEATHER STRIPPING	TPE	MAX. 24"
14	2	FAS-SEAL DOOR SWEEP	TPE	MAX. 47.66"
15	4	END CHANNEL ASTM A924 (14 GA - INVERTED)		.69" X 1.66" X 47.66" MAX.
16	1	SPLIT ASTRAGAL SET OR Z-ASTRAGAL (NOT REQ'D WITH HOLLOW METAL MULLION)	SEE SHEET 5	
17	AS NEEDED	BUTYL RUBBER OR 100% SILICONE		
18	2	DOOR SLAB (16 OR 14 GA)	SEE SHEET 6	4' X 8' MAX.
19	1	BY ZERO INT'L: DOOR SEAL No.8144FS; BY NGP: DOOR SEAL No.5020 (SEE NOTE 13.)	TPE	MAX. 24"
20	2 NOTE 14.	BY ZERO INT'L: DOOR SWEEP No.539; BY NGP: DOOR SWEEP No.202N (SEE NOTE 13.)	TPE	MAX. 96"
21	2	BY ZERO INT'L: DOOR SWEEP No.139; BY NGP: OMIT (SEE NOTE 13.)	SEE SHEET 5	MAX. 48"
22	2	BY ZERO INT'L: ADJUSTABLE STOP No.475; BY NGP: ADJUSTABLE STOP No.170N (SEE NOTE 13.)	TPE	MAX. 48"
23	2	BY ZERO INT'L: RAIN DRIP No.11; BY NGP: DRIP CAP No.16A (SEE NOTE 13.)	SEE SHEET 5	MAX. 48"
24	2	TOP CAP GALV. A60 ASTM A924	.020" MIN. STL	0.5" X 1.76" X 48" MAX.
25	2	IVES 360 12" SURFACE BOLT		
26	1	ASA STRIKE		
27	1	Z-ASTRAGAL	.067" MIN. STL	MAX. 95.5
28	1	HOLLOW METAL MULLION (SINGLE OR DOUBLE RABBET)	SEE SHEET 6	MAX. 96"

BEND RADIUS

THIRD ANGLE PROJECTION

DRAWN YMF	DATE 05/20/07
CHECKED	
APPROVED	
ENG. APPVL JPD	10/12/07

Ingersoll Rand
Security Technologies

TITLE MIAMI-DADE PRODUCT APPROVAL

H-SERIES FLUSH DOUBLE DOORS
OUTSWING CONFIGURATIONS
IR HARDWARE.

SIZE	FLAT	DWG NO.	REV
		IRFD07	J

SCALE: NTS | AUTOCAD | SHEET 3 OF 11

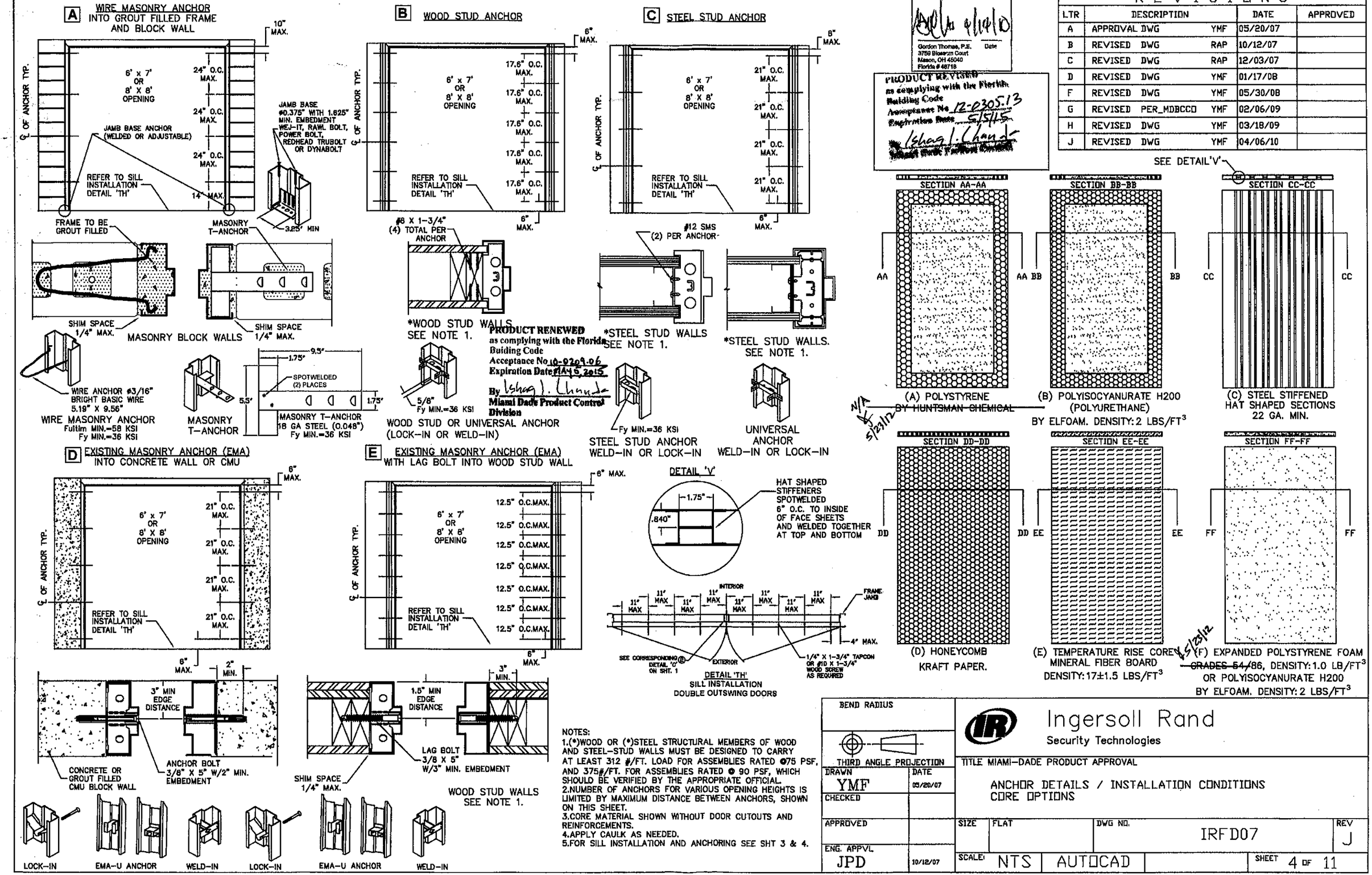

PRODUCT RENEWED as complying with the Florida Building Code
Acceptance No 10-0209.06
Expiration Date 11-15-2015
By Ishaq I. Chanda
Miami Dade Product Control Division

Gordon Thomas, P.E. 3759 Blaserjn Court Mason, OH 45040 Florida # 46718 Date 4/14/10

PRODUCT REVISED as complying with the Florida Building Code
Acceptance No 12-0305.13
Expiration Date 5/15/15
Ishaq I. Chanda

REVISIONS

LTR	DESCRIPTION		DATE	APPROVED
A	APPROVAL DWG	YMF	05/20/07	
B	REVISED DWG	RAP	10/12/07	
C	REVISED DWG	RAP	12/03/07	
D	REVISED DWG	YMF	01/17/08	
F	REVISED DWG	YMF	05/30/08	
G	REVISED PER_MDBCCO	YMF	02/06/09	
H	REVISED DWG	YMF	03/18/09	
J	REVISED DWG	YMF	04/06/10	

NOTES:
1.(*)WOOD OR (*)STEEL STRUCTURAL MEMBERS OF WOOD AND STEEL-STUD WALLS MUST BE DESIGNED TO CARRY AT LEAST 312 #/FT. LOAD FOR ASSEMBLIES RATED @75 PSF, AND 375#/FT. FOR ASSEMBLIES RATED @ 90 PSF, WHICH SHOULD BE VERIFIED BY THE APPROPRIATE OFFICIAL.
2.NUMBER OF ANCHORS FOR VARIOUS OPENING HEIGHTS IS LIMITED BY MAXIMUM DISTANCE BETWEEN ANCHORS, SHOWN ON THIS SHEET.
3.CORE MATERIAL SHOWN WITHOUT DOOR CUTOUTS AND REINFORCEMENTS.
4.APPLY CAULK AS NEEDED.
5.FOR SILL INSTALLATION AND ANCHORING SEE SHT 3 & 4.

BEND RADIUS
THIRD ANGLE PROJECTION

DRAWN	YMF	DATE 05/20/07
CHECKED		
APPROVED		
ENG. APPVL.	JPD	10/12/07

Ingersoll Rand
Security Technologies

TITLE MIAMI-DADE PRODUCT APPROVAL
ANCHOR DETAILS / INSTALLATION CONDITIONS
CORE OPTIONS

SIZE	FLAT	DWG NO.	REV
		IRFD07	J

SCALE: NTS | AUTOCAD | SHEET 4 OF 11

TABLE 3.

PERIMETER SEAL HARDWARE WHEN WATER INFILTRATION REQUIREMENT DOES APPLY

ITEM NUMBER SHT 3. TABLE 2	DESCRIPTION	MAX. ALLOWABLE DESIGN PRESSURE, PSF (UP TO) (SEE SHT.1)	MODEL No./ MANUFACTURER	PART DETAIL	INSTALLATION DETAIL
11	THRESHOLD	+75	566/ZERO INT'L	'T1'	'P1'
			950/NGP	'T2'	'P2'
14	FAS-SEAL SWEEP	+75	STEELCRAFT	'S'	'P1' & 'P2'
16	SPLIT ASTRAGAL	+75	328/ZERO INT'L	'GG1'	'N3'
			137/NGP	'GG2'	
19 OR 13	SELF ADHESIVE DOOR SEAL	+75	8144F/ZERO INT'L	'U'	'M' & 'N'
			PS074/STEELCRAFT	'Q'	
20	DOOR SWEEP	+75	639/ZERO INT'L	'W1'	'N'
			202N/NGP	'W2'	
21	DOOR SWEEP	+75	139/ZERO INT'L	'X'	'P1'
22	ADJUSTABLE STOP	+75	475/ZERO INT'L	'Y1'	'M'
			170N/NGP	'Y2'	
23	RAIN DRIP CAP	+75	11/ZERO INT'L	'Z1'	'P1'
			16A/NGP	'Z2'	'P2'
24	DOOR TOP CAP	+75	STEELCRAFT	'R'	'M'

TABLE 4.

PERIMETER SEAL HARDWARE WHEN WATER INFILTRATION REQUIREMENT DOES NOT APPLY

ITEM NUMBER SHT. 3 TABLE 2	DESCRIPTION	MODEL No. MANUFACTURER	PART DETAIL	INSTALLATION DETAIL
11	THRESHOLD	566 BY ZERO INT'L	'T1'	'K'
		950 BY NATIONAL GUARD	'T2'	
14	FAS-SEAL DOOR SWEEP	STEELCRAFT	'S'	'K'
16	SPLIT ASTRAGAL	328 BY ZERO	'GG1'	'N3'
		137 BY NGP	'GG2'	
13	PS-074 SELF ADHESIVE WEATHERSTRIPPING	STEELCRAFT	'Q'	'J' & 'L'
–	–	–	–	–
–	–	–	–	–
–	–	–	–	–
–	–	–	–	–
24	DOOR TOP CAP	STEELCRAFT	'R'	OPTIONAL

Gordon Thomas, P.E.
3759 Blossom Court
Mason, OH 45040
Florida # 46718

4/14/10
Date

REVISIONS

LTR	DESCRIPTION			DATE	APPROVED
A	APPROVAL	DWG	YMF	05/20/07	
B	REVISED	DWG	RAP	10/12/07	
C	REVISED	DWG	RAP	12/03/07	
D	REVISED	DWG	YMF	01/07/07	
E	REVISED	DWG	YMF	04/09/08	
F	REVISED	DWG	YMF	06/02/08	
G	REVISED	PER_MDBCCD	YMF	02/06/09	
H	REVISED	DWG	YMF	03/18/09	
J	REVISED	PER_MDBCCD	YMF	04/06/10	

PRODUCT REVISED
as complying with the Florida Building Code
Acceptance No. 12-0305.13
Expiration Date 5/5/15
By Ishaq I. Chanda
Miami Dade Product Control Division

PERIMETER SEAL INSTALLATION DETAILS WHEN WATER INFILTRATION REQUIREMENTS DO NOT APPLY

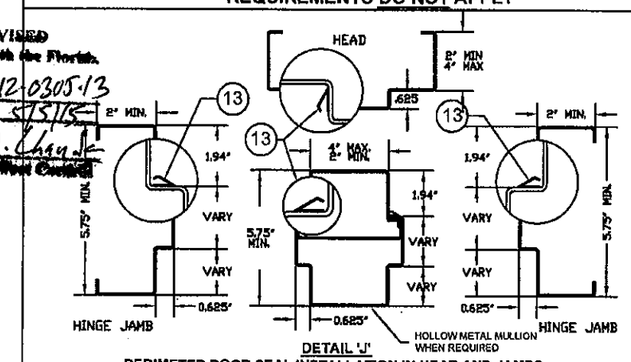

DETAIL 'J'
PERIMETER DOOR SEAL INSTALLATION IN HEAD AND JAMBS

PART DETAILS

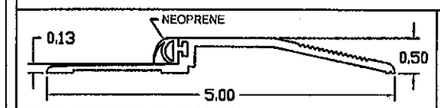

WHEN WATER INFILTRATION REQUIREMENT IS NEEDED - MAX. DP = +75 PSF

(11) DETAIL 'T1'
TYPE 1 THRESHOLD
ZERO INT'L 566 SERIES

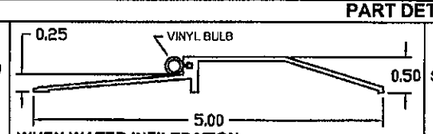

WHEN WATER INFILTRATION REQUIREMENT IS NEEDED - MAX. DP = +75 PSF

(11) DETAIL 'T2'
TYPE 2 THRESHOLD
NATIONAL GUARD 950 SERIES

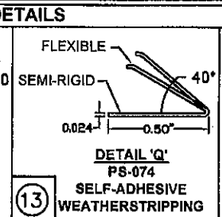

(13) DETAIL 'Q'
PS-074
SELF-ADHESIVE WEATHERSTRIPPING

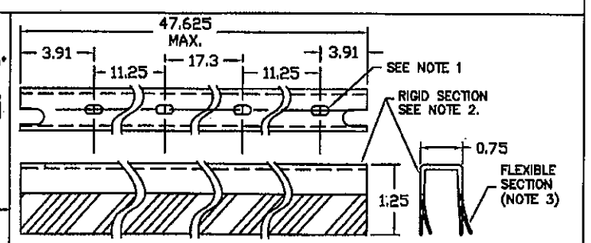

(14) DETAIL 'S'
FAS-SEAL DOOR SWEEP

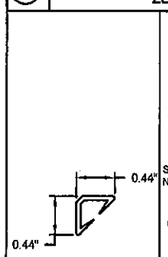

(19) DETAIL 'U'
8144F
DOOR SEAL

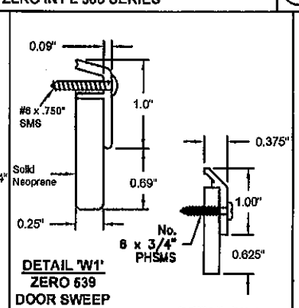

(20) DETAIL 'W1'
ZERO 639
DOOR SWEEP

DETAIL 'W2'
NGP 202
DOOR SEAL

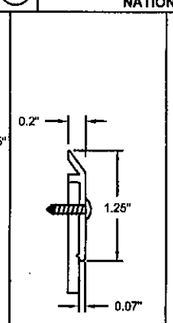

(21) DETAIL 'X'
139
DOOR SWEEP

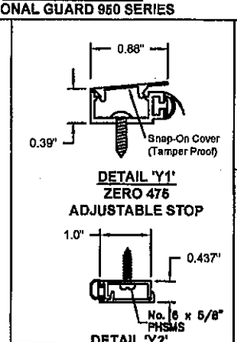

(22) DETAIL 'Y1'
ZERO 475
ADJUSTABLE STOP

DETAIL 'Y2'
NGP 170N
ADJUSTABLE STOP

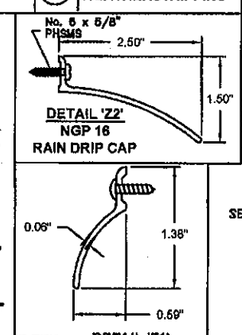

(13) DETAIL 'Z2'
NGP 16
RAIN DRIP CAP

(23) DETAIL 'Z1'
ZERO 11
RAIN DRIP CAP

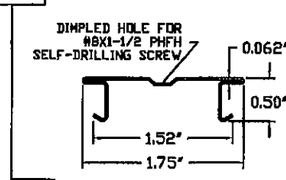

(24) DETAIL 'R'
24 GA TOP CAP

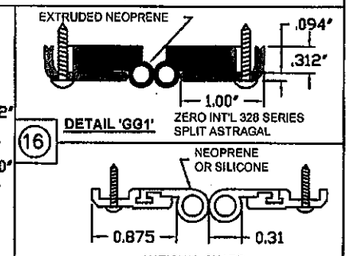

(16) DETAIL 'GG1'
ZERO INT'L 328 SERIES SPLIT ASTRAGAL

DETAIL 'GG2'
NATIONAL GUARD
137 SERIES SPLIT ASTRAGAL

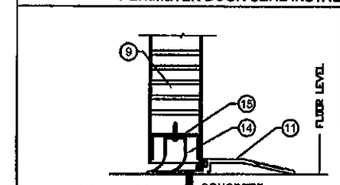

DETAIL 'K'
BOTTOM OF DOOR
WEATHERSTRIPPING AND SILL INSTALLATION

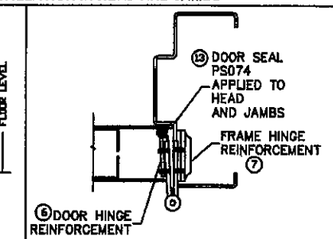

HINGE DETAIL 'L'
HINGE SIDE
WEATHERSTRIPPING INSTALLATION

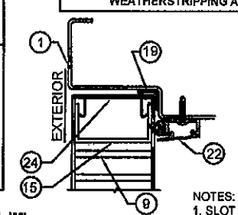

DETAIL 'M'
TOP OF DOOR/HEAD WEATHERSTRIPPING
WHEN WATER INFILTRATION REQUIREMENTS APPLY

PRODUCT RENEWED
as complying with the Florida Buiding Code
Acceptance No 10-0209.06
Expiration Date MAY 5, 2015
By Ishaq I. Chanda
Miami Dade Product Control Division

NOTES:
1. SLOT LOCATIONS MAY VARY WITH DIFFERENT DOOR WIDTH.
2. DOOR SWEEP RIGID SECTION IS MADE OF PRO-FAX #PD-199 POLYPROPYLENE HOMOPOLYMER.
3. DOOR SWEEP FLEXIBLE SECTION IS MADE OF SANTOPRENE #101-73
4. FAS-SEAL DOOR SWEEP (14), AND THRESHOLD (11) ARE REQUIRED FOR ALL INSTALLATIONS.

PERIMETER SEAL INSTALLATION DETAILS WHEN WATER INFILTRATION REQUIREMENTS APPLY

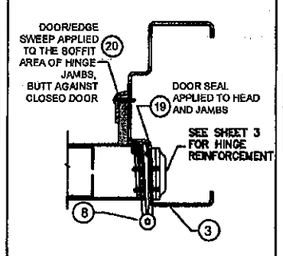

DETAIL 'N1'
HINGE JAMB
SWEEP INSTALLATION

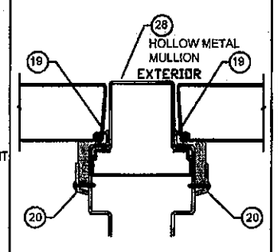

DETAIL 'N2'
HOLLOW METAL MULLION
WEATHERSTRIPPING

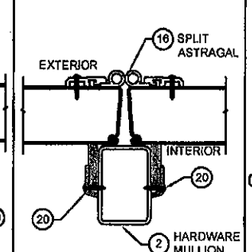

DETAIL 'N3'
HARDWARE MULLION
WEATHERSTRIPPING

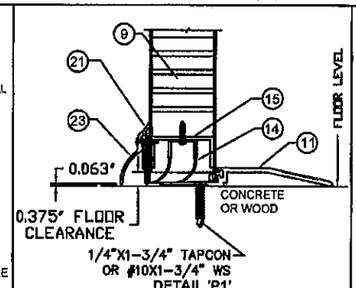

DETAIL 'P1'
BOTTOM OF DOOR
ZERO WEATHERSTRIPPING
AND SILL INSTALLATION

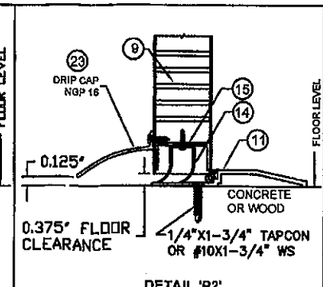

DETAIL 'P2'
BOTTOM OF DOOR
NGP WEATHERSTRIPPING
AND SILL INSTALLATION

BEND RADIUS

THIRD ANGLE PROJECTION

DRAWN	YMF	DATE 05/20/07
CHECKED		
APPROVED		
ENG. APPVL	JPD	10/11/07

Ingersoll Rand
Security Technologies

TITLE MIAMI-DADE PRODUCT APPROVAL

DOUBLE FLUSH DOOR PERIMETER SEAL HARDWARE.

SIZE	FLAT	DWG NO.	REV
		IRFD07	J

SCALE: NTS | AUTOCAD | SHEET 5 of 11

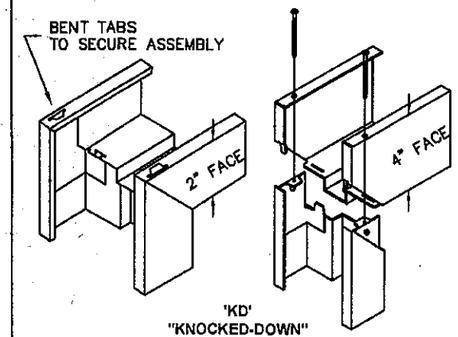

'KD'
"KNOCKED-DOWN"
ASSEMBLY

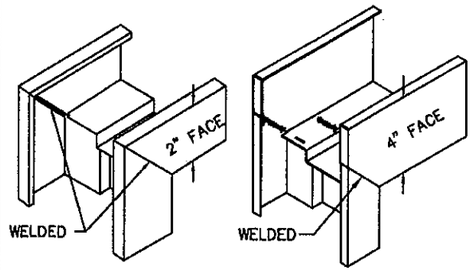

'SUA'
SET-UP AND ARC-WELDED
ASSEMBLY

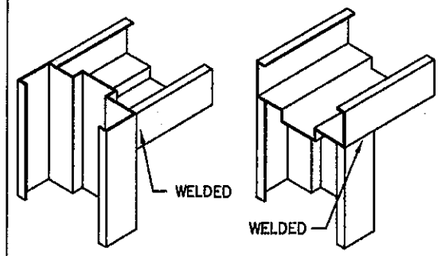

HEAD NOTCHED
AND BUTTED BETWEEN JAMBS

HEAD SITS ON TOP
OF NOTCHED JAMBS

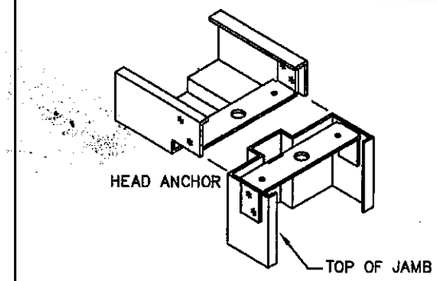

HEAD NOTCHED
AND BOLTED ON TOP OF JAMBS

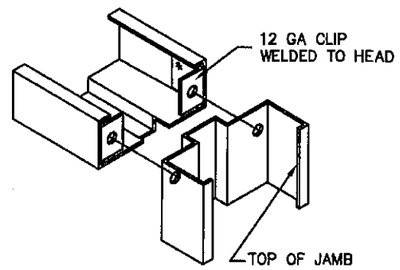

HEAD NOTCHED
AND BOLTED BETWEEN JAMBS

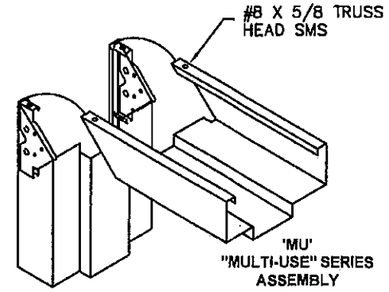

'MU'
"MULTI-USE" SERIES
ASSEMBLY
SUA OPTIONAL

Gordon Thomas, P.E.
3759 Blossom Court
Mason, OH 45040
Florida # 46718

4/14/10
Date

PRODUCT REVISED
as complying with the Florida
Building Code
Acceptance No. 12-0305.13
Expiration Date 5/13/15
By Ishaq I. Chanda
Miami Dade Product Control Division

REVISIONS				
LTR	DESCRIPTION		DATE	APPROVED
A	APPROVAL DWG	YMF	05/20/07	
B	REVISED DWG	RAP	10/12/07	
C	REVISED DWG	RAP	12/03/07	
D	REVISED DWG	YMF	01/23/08	
E	REVISED DWG	YMF	04/09/08	
F	REVISED DWG	YMF	06/02/08	
G	REVISED PER_MDBCCO	YMF	02/06/09	
H	REVISED DWG	YMF	03/18/09	
J	REVISED DWG	YMF	04/06/10	

TABLE 7. STEEL MECHANICAL PROPERTIES

MATERIAL	ASTM REF.	YIELD KSI	TENSILE KSI
CRS	A1008	MIN. 30.1	MIN. 44.7
HRS	A1011		
GALV: A60	A924		
SS: 304,306	A240	MIN. 31.2	MIN. 73.2

TABLE 6. AVAILABLE FRAME CONFIGURATIONS

FRAME SERIES	JAMB DEPTH	MAX. OPENING SIZE WIDTH	MAX. OPENING SIZE HEIGHT	MATERIAL DESCR.	MATERIAL GA./MIN. THK
F	5.75" MIN.	8'0"	8'0"	CRS/HRS GALV	16/.053" 14/.067" 12/.099"
				STAINLESS STEEL	16/.053"
MU	5.75" MIN.	8'0"	8'0"	CRS/HRS GALV	16/.053" 14/.067"

TABLE 5. AVAILABLE DOOR CONFIGURATIONS

CORE MATERIAL PER SHT.4	MAXIMUM OPENING SIZE WIDTH / HEIGHT	SKIN MATERIAL DESCR.	SKIN MATERIAL GA./MIN. THK
HONEYCOMB POLYSTYRENE POLYURETHANE (POLYISOCYANURATE) TEMPERATURE RISE STEEL STIFFENED	VARIES SEE SHEET 2 TABLE 1	CRS GALV	16/.053" 14/.067"
HONEYCOMB POLYSTYRENE POLYURETHANE	VARIES SEE SHEET 2 TABLE 1	STAINLESS STEEL	16/.053"

TYPICAL FRAME PROFILE
DOUBLE RABBET

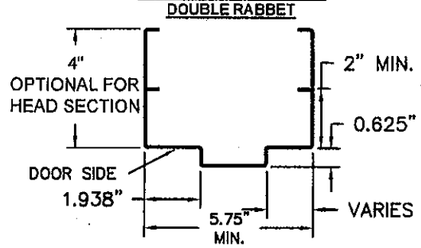

OPTIONAL FRAME PROFILE
SINGLE RABBET

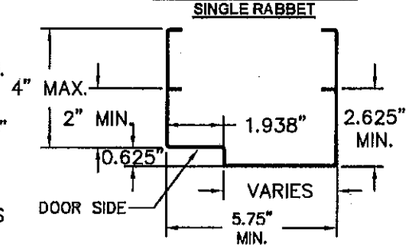

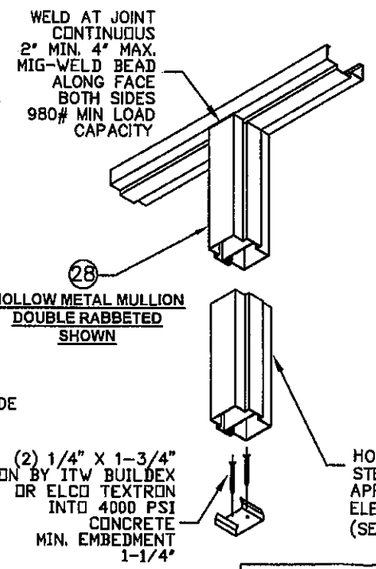

AVAILABLE DOOR PANEL CONFIGURATIONS

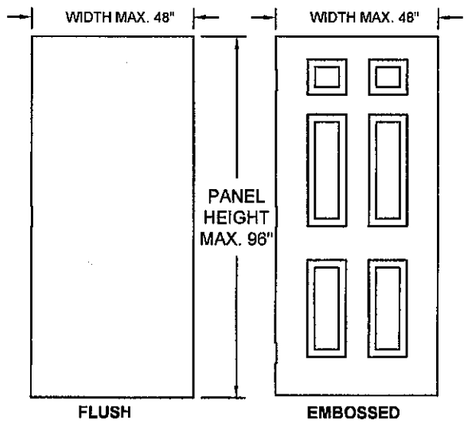

NOTES:

1. DOOR CONSTRUCTION
1.1. MINIMUM DOOR THICKNESS – 1 3/4"
1.2. DOOR SIZE MAY VARY, SUBJECTED TO COMPLIANCE WITH FLORIDA BUILDING CODE AND PRODUCT AVAILABILITY FROM MANUFACTURER (SEE SHEET 2 FOR AVAILABLE HARDWARE)
1.3. PEEP-HOLES AND DOOR VIEWERS ARE ALLOWED

2. FRAME CONSTRUCTION
1.1. MINIMUM JAMB DEPTH – 5 3/4", STOP HEIGHT – 5/8"
2.2. FRAMES AVAILABLE AS FLUSH (F-SERIES) AND MULT-USE (MU-SERIES) (SEE TABLE 6)
3. FOR MATERIAL SPECIFICATIONS REFERENCE SEE TABLE 7.
4. HOLLOW METAL MULLION (ITEM 28 PER TAB.2, SHT.3) TO BE USED WITH 3-POINT LATCH IN DOOR CONFIGURATION #10

28 HOLLOW METAL MULLION
DOUBLE RABBET

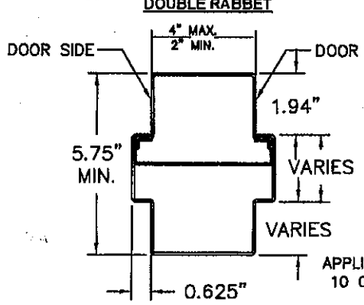

28 HOLLOW METAL MULLION
SINGLE RABBET

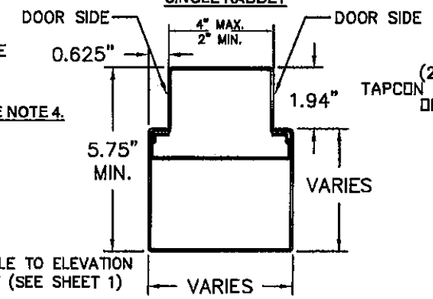

SEE NOTE 4.

APPLICABLE TO ELEVATION
10 ONLY (SEE SHEET 1)

MATERIAL IS PER TABLE 7. MINIMUM THICKNESS IS 0.053" (16 Ga.)
MINIMUM YIELD STRENGTH = 58,000 PSI
MINIMUM TENSILE STRENGTH = 45,700 PSI

PRODUCT RENEWED
as complying with the Florida
Building Code
Acceptance No. 10-0209.06
Expiration Date MAY 5, 2015
By Ishaq I. Chanda
Miami Dade Product Control
Division

BEND RADIUS

THIRD ANGLE PROJECTION

DRAWN	YMF	DATE 05/20/07
CHECKED		
APPROVED		
ENG. APPVL	JPD	10/12/07

Ingersoll Rand
Security Technologies

TITLE MIAMI-DADE PRODUCT APPROVAL
FRAME PROFILE, CORNER DETAILS AND DOOR FRAME MATERIAL, AND SIZE OPTIONS

SIZE	FLAT	DWG NO.	REV
		IRFD07	J

SCALE: NTS | AUTOCAD | SHEET 6 OF 11

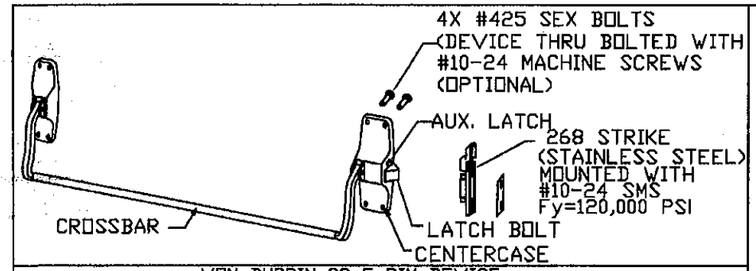

VON DUPRIN 88-F RIM DEVICE
USED IN CONFIRATION: 6

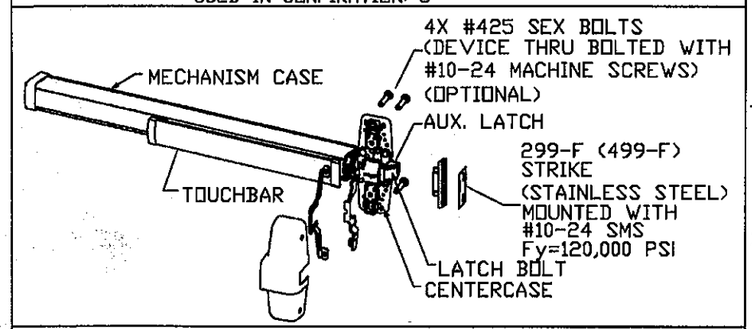

VON DUPRIN 98/99 (F) RIM DEVICE
USED IN CONFIGURATION: 6

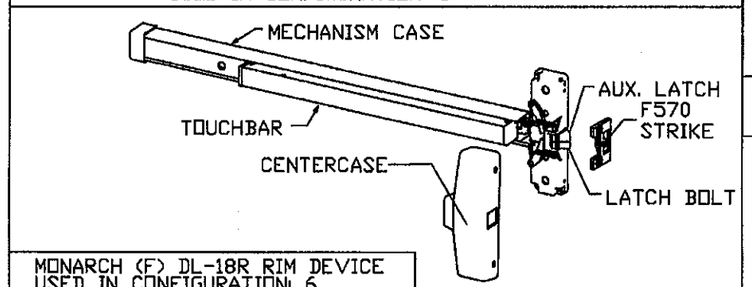

MONARCH (F) DL-18R RIM DEVICE
USED IN CONFIGURATION: 6

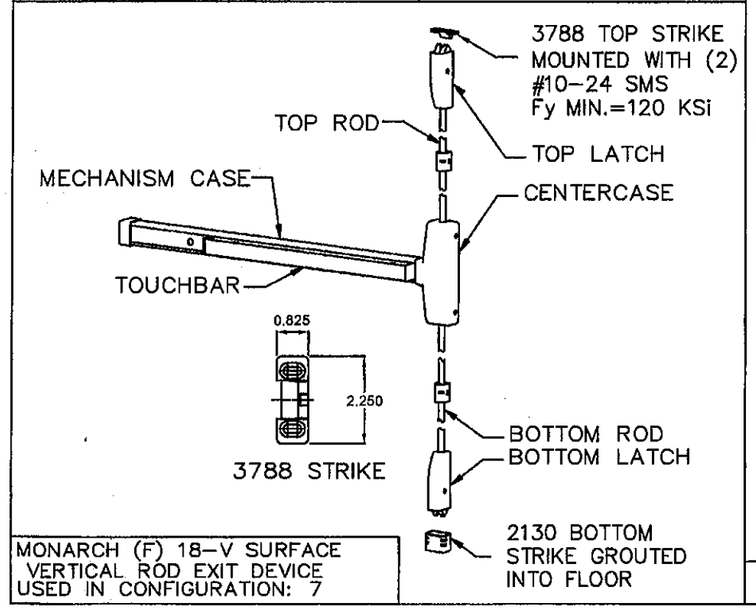

MONARCH (F) 18-V SURFACE
VERTICAL ROD EXIT DEVICE
USED IN CONFIGURATION: 7

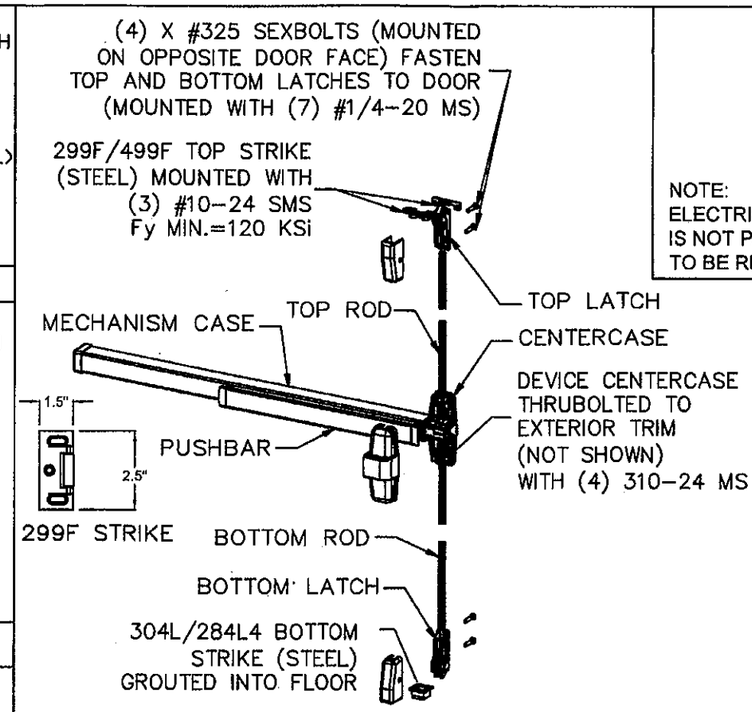

VON DUPRIN 98/9927 (F) SURFACE VERTICAL ROD EXIT DEVICE
USED IN CONFIGURATION: 7

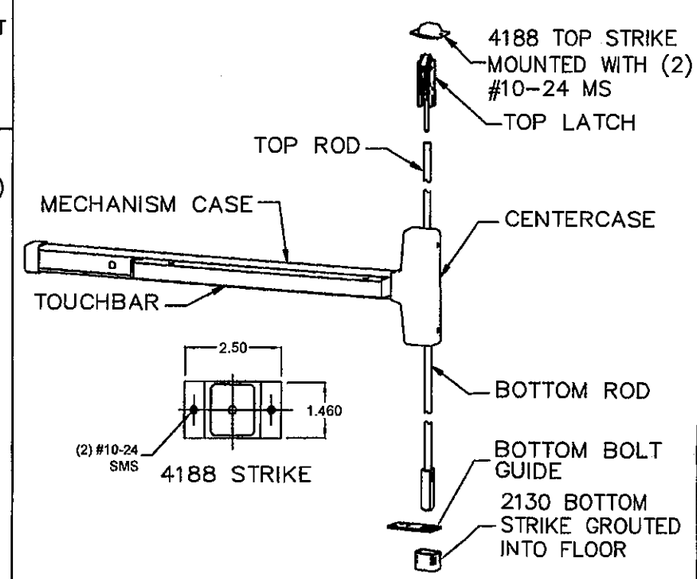

MONARCH F-18-C CONCEALED VERTICAL ROD EXIT DEVICE
USED IN CONFIGURATION: 8

PRODUCT RENEWED
as complying with the Florida
Building Code
Acceptance No 10-0209.06
Expiration Date MAY 5, 2015
By Ishaq I. Chanda
Miami Dade Product Control
Division

NOTE:
ELECTRICAL FUNCTIONS/INSTALLATION
IS NOT PART OF THIS APPROVAL AND
TO BE REVIEWED BY BUILDING OFFICIAL

PRODUCT REVISED
as complying with the Florida
Building Code
Acceptance No 12-0305.13
Expiration Date 5/15/15
By Ishaq I. Chanda
Miami Dade Product Control

REVISIONS					
LTR	DESCRIPTION			DATE	APPROVED
B	REVISED	DWG	RAP	10/12/07	
C	REVISED	DWG	RAP	12/03/07	
D	REVISED	DWG	YMF	01/23/08	
E	REVISED	DWG	YMF	04/09/08	
F	REVISED	DWG	YMF	06/02/08	
G	REVISED	PER_MDBCCD	YMF	02/06/09	
H	REVISED	DWG	YMF	03/18/09	
J	REVISED	PER_MDBCCD	YMF	04/06/10	

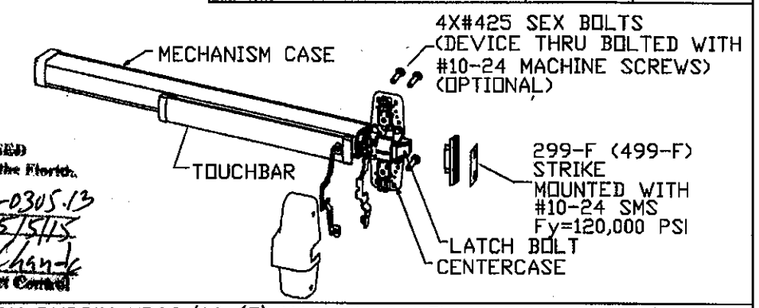

VON DUPRIN XP98/99 (F) USED IN CONFIGURATION: 5

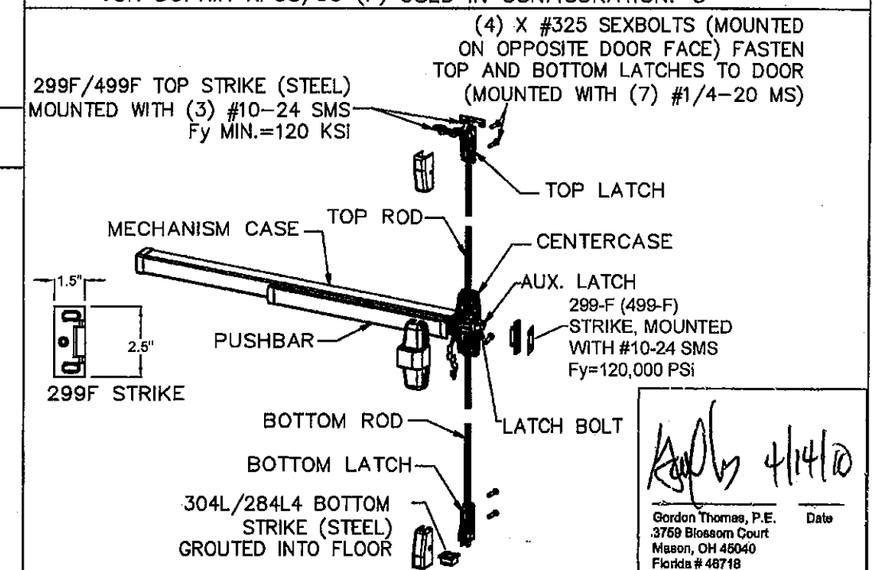

4/14/10
Gordon Thomas, P.E. Date
3759 Blossom Court
Mason, OH 45040
Florida # 46718

VON DUPRIN 98/9957 (F) THREE-POINT LATCHING DEVICE
USED IN CONFIGURATIONS: 9 & 10

BEND RADIUS

THIRD ANGLE PROJECTION

DRAWN	YMF	DATE 05/20/07
CHECKED		CDATE
APPROVED		ADATE
ENG. APPVL	JPD	EDATE 10/12/07

Ingersoll Rand
Security Technologies

TITLE MIAMI-DADE PRODUCT APPROVAL

IR EXIT HARDWARE FOR FLUSH DOUBLE DOORS.

SIZE	FLAT	DWG NO.	REV
		IRFD07	J

SCALE: NTS | AUTOCAD | SHEET 7 OF 11

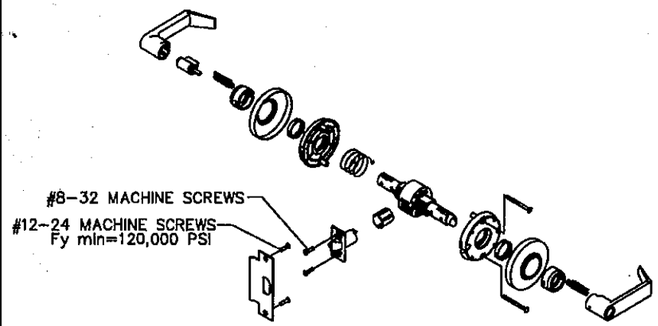

SCHLAGE AL SERIES
CYLINDRICAL LEVER LOCKSET WITH 1/2" THROW LATCH
USED IN CONFIGURATION: 2

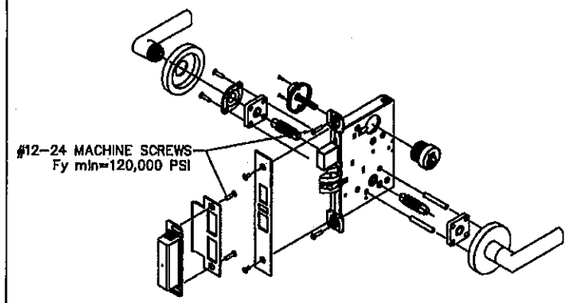

SCHLAGE L/LV 9400 SERIES MORTISE LOCKSET
W/ DEADBOLT. USED IN CONFIGURATION: 1

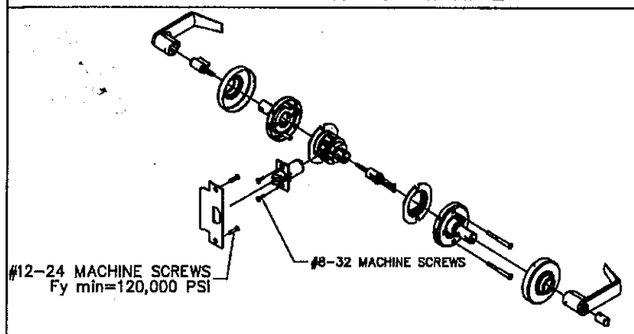

SCHLAGE D/ND-SERIES CYLINDRICAL LEVER LOCKSET.
USED IN CONFIGURATIONS: 3 & 4

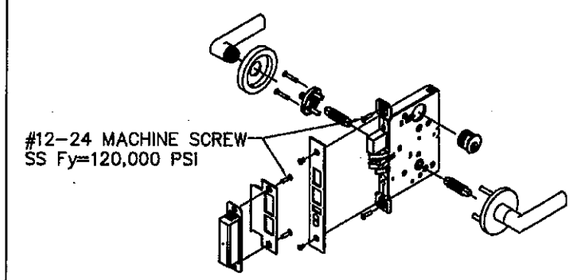

FALCON M-SERIES MORTISE LOCKSET W/ DEADBOLT
USED IN CONFIGURATION: 1

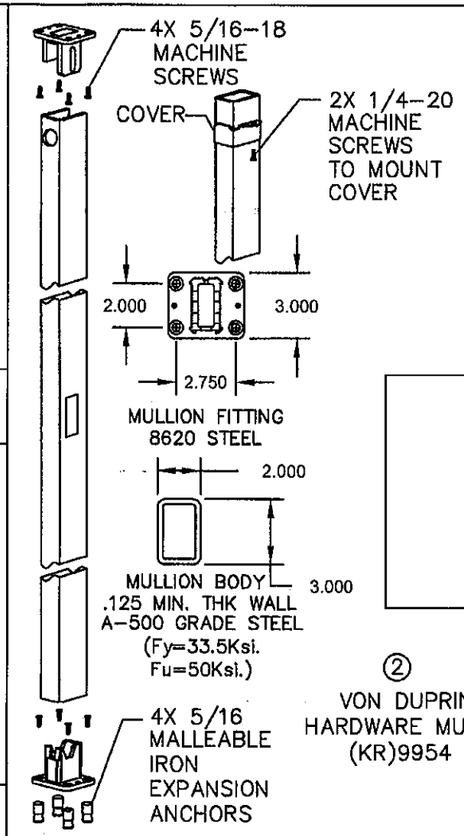

② VON DUPRIN
HARDWARE MULLION
(KR)9954

REVISIONS					
LTR	DESCRIPTION			DATE	APPROVED
A	APPROVAL	DWG	YMF	05/20/07	
B	REVISED	DWG	RAP	10/12/07	
C	REVISED	DWG	RAP	12/03/07	
D	REVISED	DWG	YMF	01/23/08	
E	REVISED	DWG	YMF	04/09/08	
F	REVISED	DWG	YMF	06/02/08	
G	REVISED	PER_MDBCCO	YMF	02/06/09	
H	REVISED	DWG	YMF	03/18/09	
J	REVISED	PER_MDBCCO	YMF	04/06/10	

PRODUCT RENEWED
as complying with the Florida
Building Code
Acceptance No 10-0209.06
Expiration Date MAY 5, 2015
By Ishaq I. Chand
Miami Dade Product Control
Division

Gordon Thomas, P.E.
3759 Blossom Court
Mason, OH 45040
Florida # 46718
Date 4/14/10

NOTE:
ELECTRICAL FUNCTIONS/INSTALLATION
IS NOT PART OF THIS APPROVAL AND
TO BE REVIEWED BY BUILDING OFFICIAL

PRODUCT REVISED
as complying with the Florida
Building Code
Acceptance No 12-0305.13
Expiration Date 5/5/15
By Ishaq I. Chand
Miami Dade Product Control

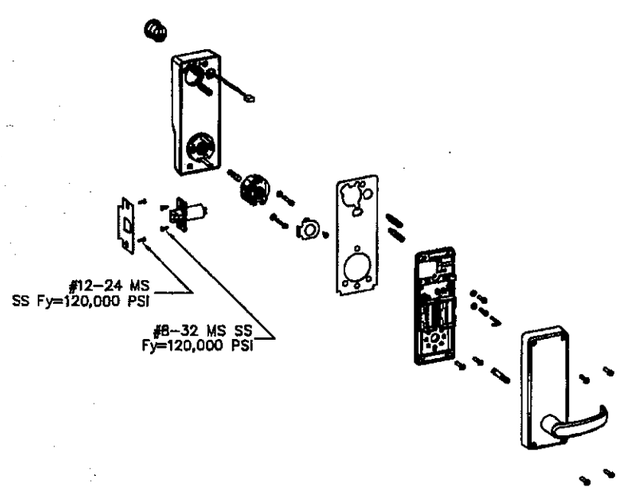

LOCKNETICS / SCHLAGE 5100 SERIES
CYLINDRICAL LEVER LOCKSET.
USED IN CONFIGURATION: 4

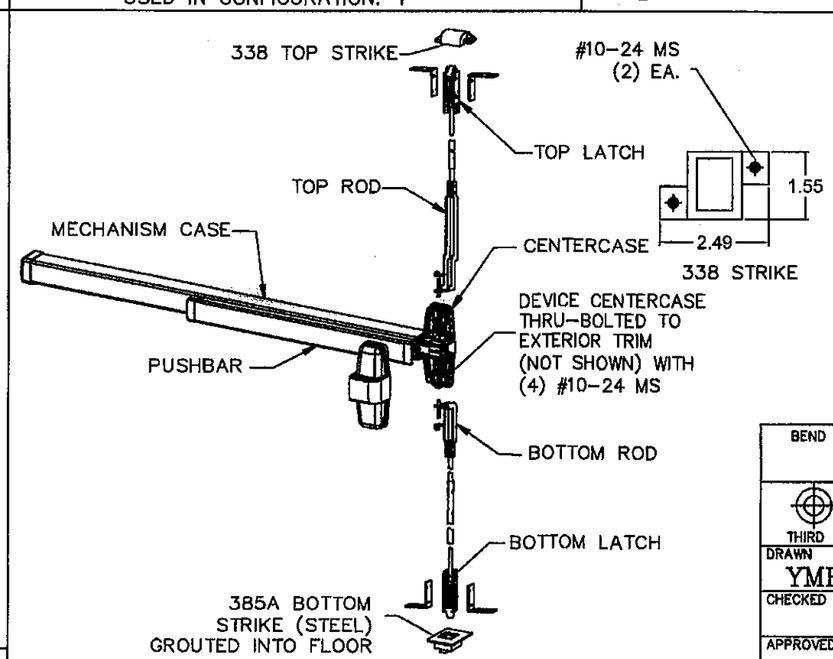

VON DUPRIN 98/9947-F CONCEALED VERTICAL ROD EXIT DEVICE
USED IN CONFIGURATION: 8

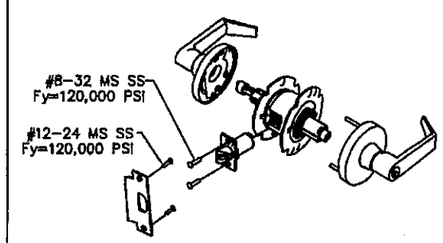

FALCON, T-SERIES CYLINDRICAL
LEVER LOCKSET.
USED IN CONFIGURATION: 4

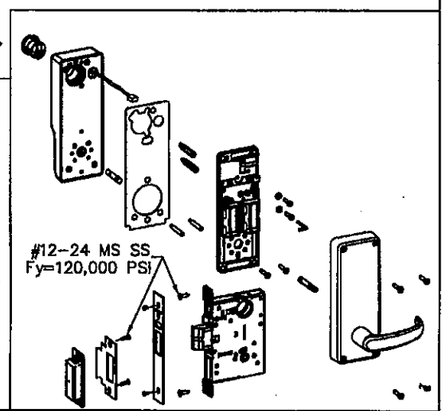

LOCKNETICS / SCHLAGE 5500 SERIES
MORTISE LOCKSET W/ AUTOBOLT.
USED IN CONFIGURATION: 1

BEND RADIUS

THIRD ANGLE PROJECTION

DRAWN	YMF	DATE 05/20/07
CHECKED		
APPROVED		
ENG. APPVL	JPD	10/12/07

Ingersoll Rand
Security Technologies

TITLE MIAMI-DADE PRODUCT APPROVAL
IR EXIT HARDWARE FOR FLUSH DOUBLE DOORS.

SIZE	FLAT	DWG NO.	REV
		IRFD07	J

SCALE: NTS | AUTOCAD | SHEET 8 OF 11

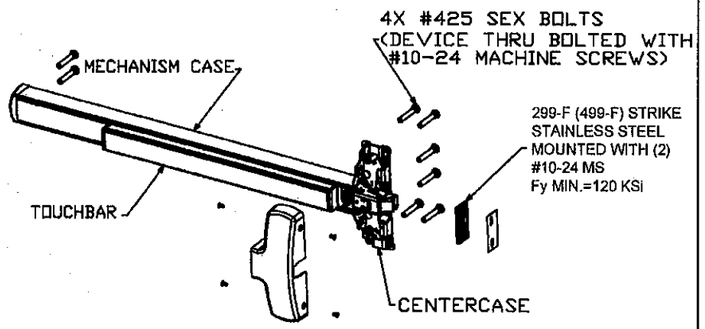

RIM EXIT DEVICE FALCON (F)25-R
USED IN **DOOR CONFIGURATION 11** (SEE SHT.1)

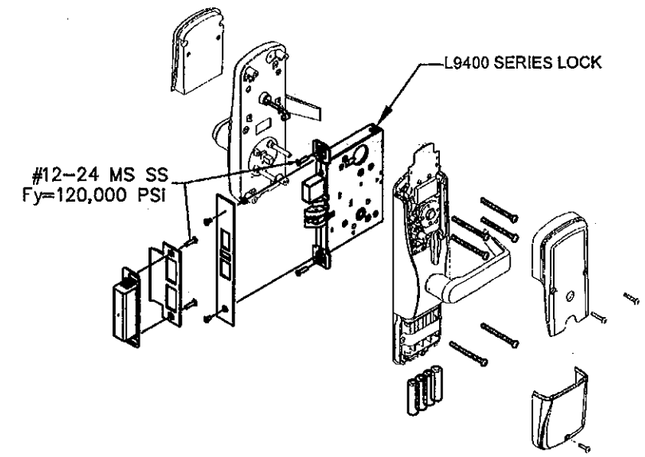

SCHLAGE CO/AD MS SERIES MORTISE LOCKSET WITH DEADBOLT
USED IN CONFIGURATIONS: 1 (SEE SHT. 1)

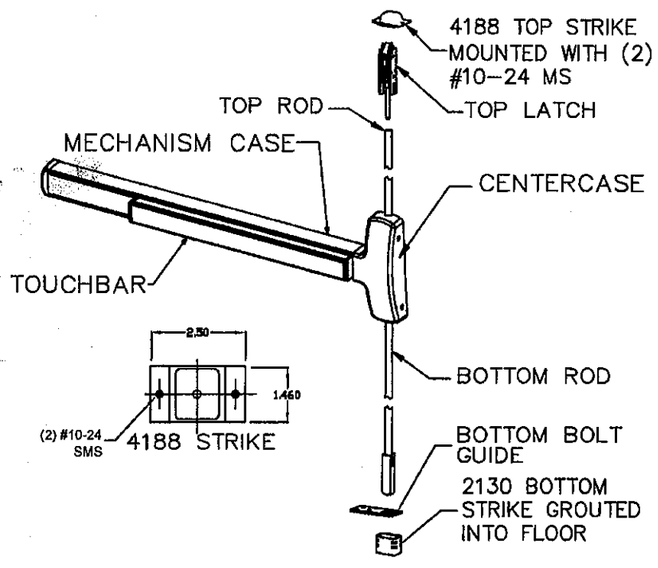

CONCEALED VERTICAL ROD EXIT DEVICE FALCON F-25-C
USED IN **DOOR CONFIGURATION 8** (SEE SHT.1)

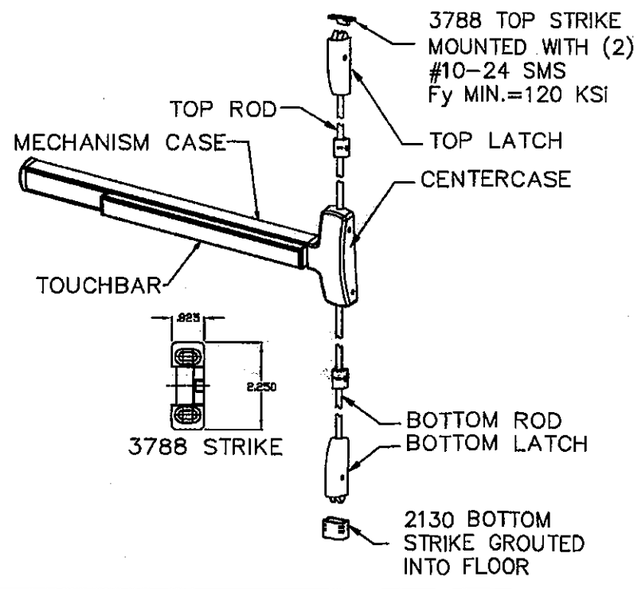

SURFACE VERTICAL ROD EXIT DEVICE FALCON (F)25-V
USED IN **DOOR CONFIGURATION 7** (SEE SHT.1)

Gordon Thomas, P.E.
3759 Blossom Court
Mason, OH 45040
Florida # 46718

4/14/10
Date

NOTE:
ELECTRICAL FUNCTIONS/INSTALLATION
IS NOT PART OF THIS APPROVAL AND
TO BE REVIEWED BY BUILDING OFFICIAL

PRODUCT RENEWED
as complying with the **Florida**
Building Code
Acceptance No 10-0209.06
Expiration Date MAY 5, 2015
By Ishaq I. Chund
Miami Dade Product Control
Division

REVISIONS				
LTR	DESCRIPTION		DATE	APPROVED
A	APPROVAL DWG	YMF	05/20/07	
B	REVISED DWG	RAP	10/08/07	
C	REVISED DWG	RAP	12/03/07	
D	REVISED DWG	YMF	01/23/08	
E	REVISED DWG	YMF	04/09/08	
F	REVISED DWG	YMF	06/02/08	
G	REVISED PER_MDBCCD	YMF	02/06/09	
H	REVISED DWG	YMF	03/18/09	
J	REVISED PER_MDBCCD	YMF	04/06/10	

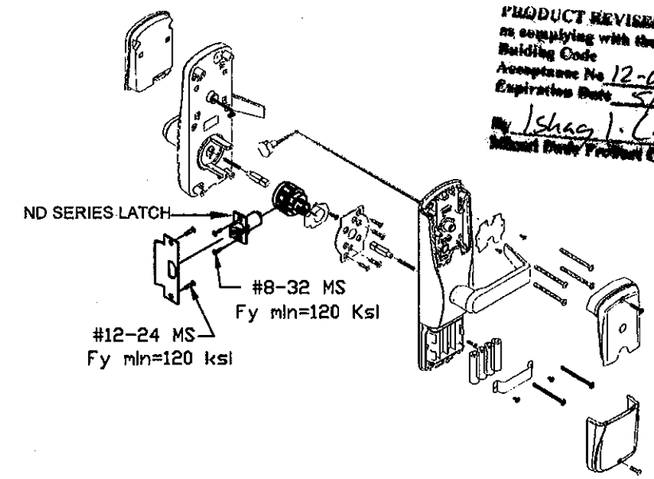

PRODUCT REVISED
as complying with the **Florida**
Building Code
Acceptance No 12-0305.13
Expiration Date 5/5/15
By Ishaq I. Chund
Miami Dade Product Control

SCHLAGE CO/AD CY SERIES CYLINDRICAL LOCKSET
USED IN CONFIGURATIONS: 3&4 (SEE SHT.1)

BEND RADIUS

THIRD ANGLE PROJECTION

Ingersoll Rand
Security Technologies

TITLE MIAMI-DADE PRODUCT APPROVAL

IR EXIT HARDWARE FOR FLUSH DOUBLE DOORS.

DRAWN YMF	DATE 05/20/07		
CHECKED	CDATE		
APPROVED	ADATE	SIZE FLAT	DWG NO. IRFD07 REV J
ENG. APPVL JPD	EDATE 10/12/07	SCALE: NTS AUTOCAD	SHEET 9 OF 11

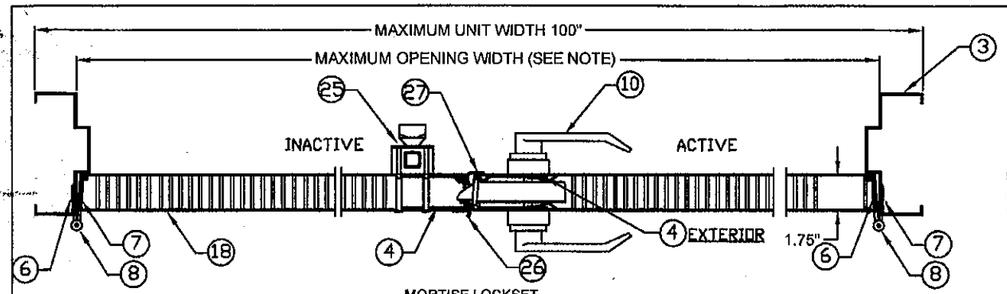

MORTISE LOCKSET
SECTION A-1
(SEE SHT.1)

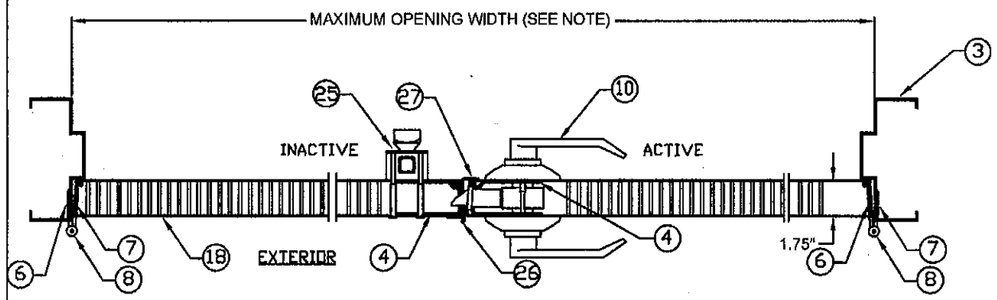

CYLINDRICAL LOCKSET
SECTIONS A-2, A-3, A-4
(SEE SHT.1)

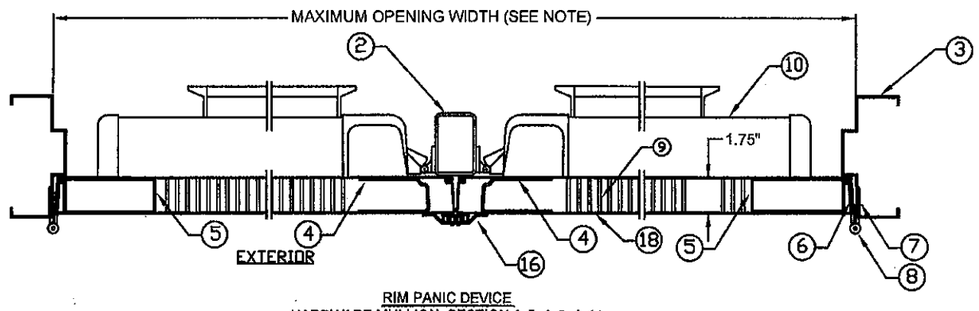

RIM PANIC DEVICE
HARDWARE MULLION. SECTION A-5, A-6, A-11
(SEE SHT.1)

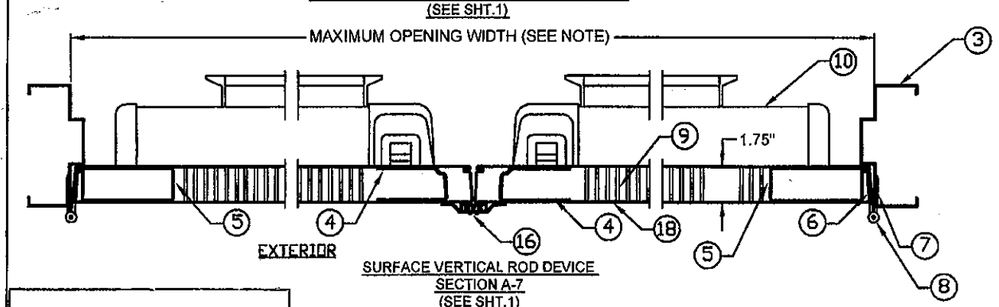

SURFACE VERTICAL ROD DEVICE
SECTION A-7
(SEE SHT.1)

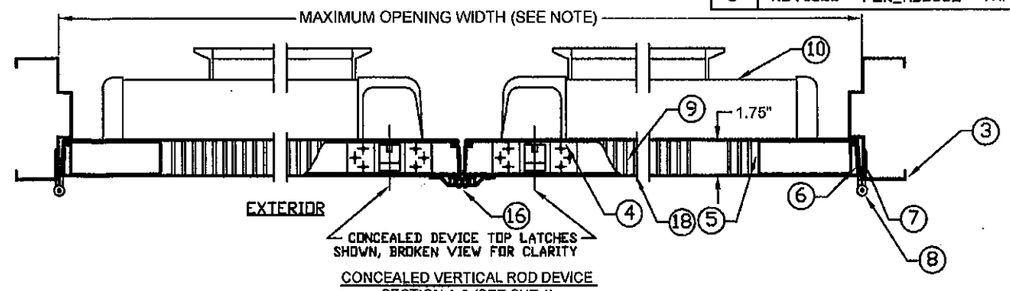

CONCEALED VERTICAL ROD DEVICE
SECTION A-8 (SEE SHT.1)

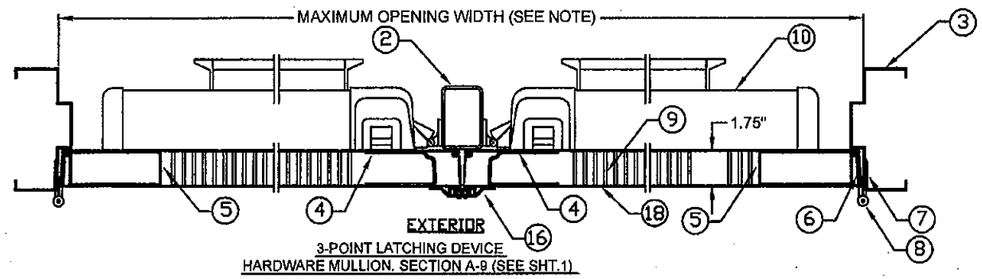

3-POINT LATCHING DEVICE
HARDWARE MULLION. SECTION A-9 (SEE SHT.1)

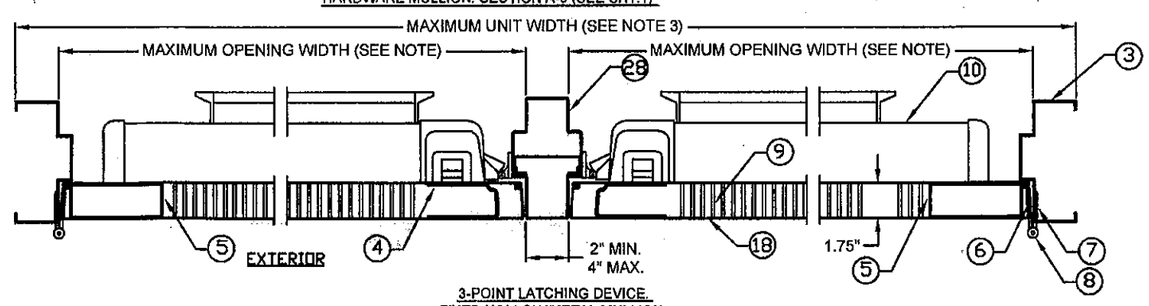

3-POINT LATCHING DEVICE.
FIXED HOLLOW METAL MULLION.
SECTION A-10 (SEE SHT.1)

PRODUCT RENEWED
as complying with the Florida
Building Code
Acceptance No 10-0209.06
Expiration Date MAY 5 2015
By Ishay I. Chanda
Miami Dade Product Control
Division

PRODUCT REVISED
as complying with the Florida
Building Code
Acceptance No 12-0305.13
Expiration Date 5/13/15
By Ishay I. Chanda
Miami Dade Product Control

REVISIONS					
LTR	DESCRIPTION			DATE	APPROVED
A	APPROVAL	DWG	YMF	05/20/07	
B	REVISED	DWG	RAP	10/08/07	
C	REVISED	DWG	RAP	12/03/07	
D	REVISED	DWG	YMF	01/23/08	
E	REVISED	DWG	YMF	04/09/08	
F	REVISED	DWG	YMF	06/02/08	
G	REVISED	PER_MDBCCD	YMF	02/06/09	
H	REVISED	DWG	YMF	03/18/09	
J	REVISED	PER_MDBCCD	YMF	04/06/10	

4/14/10

Gordon Thomas, P.E. Date
3759 Blossom Court
Mason, OH 45040
Florida # 46718

NOTES:

1. FOR MAXIMUM OPENING SIZE SEE TABLE 1 ON SHT 2 OF 11.
2. SEE SHEET 4 FOR ANCHOR INSTALLATION DETAILS.
3. WHEN FIXED HOLLOW-METAL MULLION IS USED (CONFIGURATION 10 PER SHT.1) OVERALL UNIT WIDTH IS LIMITED TO 100". DOOR SIZES WILL DECREASE ACCORDINGLY.

BEND RADIUS

THIRD ANGLE PROJECTION

DRAWN YMF	DATE 05/20/07
CHECKED	
APPROVED	
ENG. APPVL	

Ingersoll Rand
Security Technologies

TITLE MIAMI-DADE PRODUCT APPROVAL

HORIZONTAL CROSS SECTIONS FOR FLUSH DOUBLE DOORS.

SIZE	FLAT	DWG NO.	REV
		IRFD07	J
SCALE: NTS	AUTOCAD		SHEET 10 OF 11

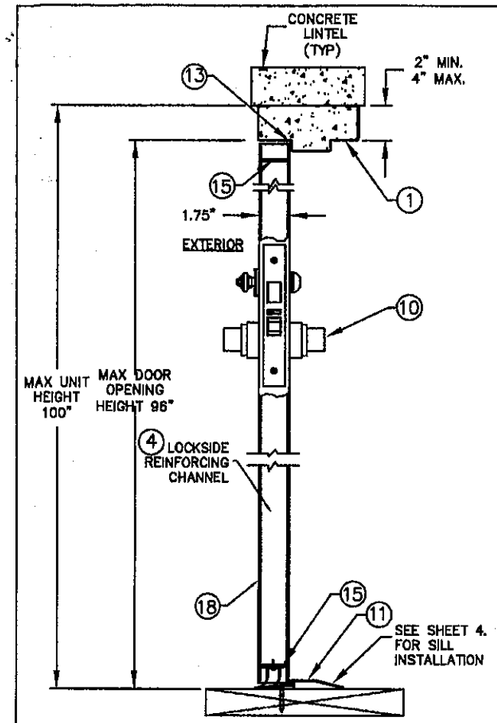

MORTISE LOCK
SECTION B-1
(SEE SHT.1)

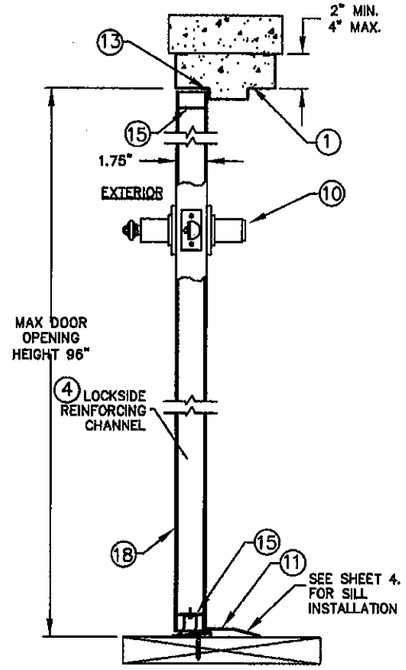

CYLINDRICAL LOCK
SECTIONS B-2, B-3, B-4 (SEE SHT.1)

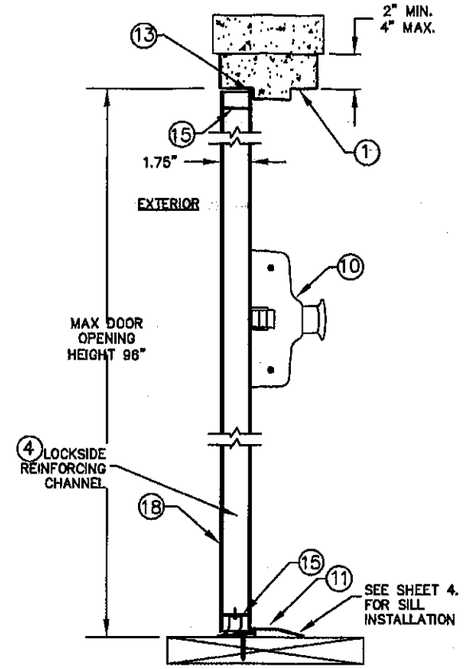

RIM EXIT DEVICE
SECTIONS B-5, B-6, B-11 (SEE SHT.1)

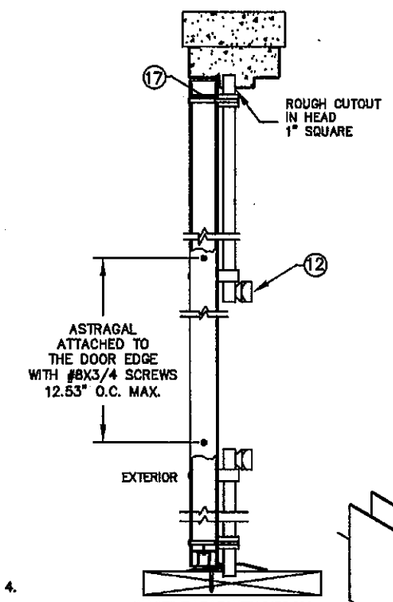

INACTIVE LEAF WITH IVES 361 SURFACE BOLTS IN TOP AND BOTTOM
SECTIONS C-1, C-2, C-3, C-4
(SEE SHT. 1)

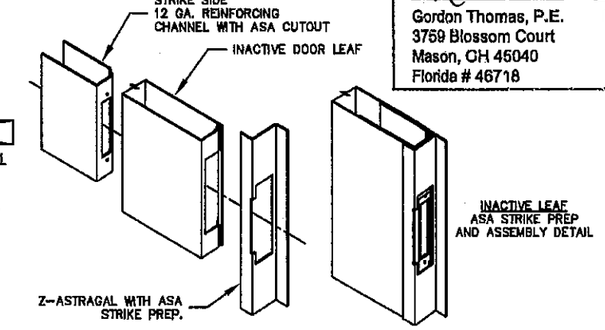

INACTIVE LEAF
ASA STRIKE PREP
AND ASSEMBLY DETAIL

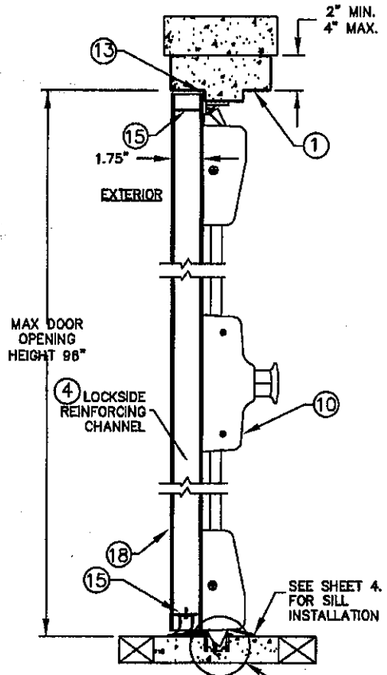

SURFACE VERTICAL ROD EXIT DEVICE
SECTION B-7 (SEE SHT.1)

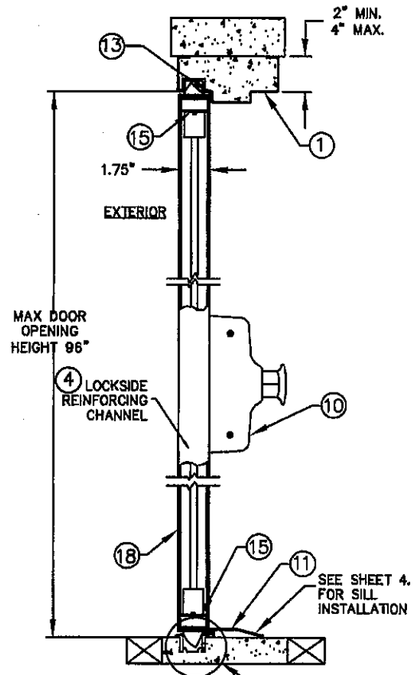

CONCEALED VERTICAL ROD EXIT DEVICE
SECTION B-8 (SEE SHT.1)

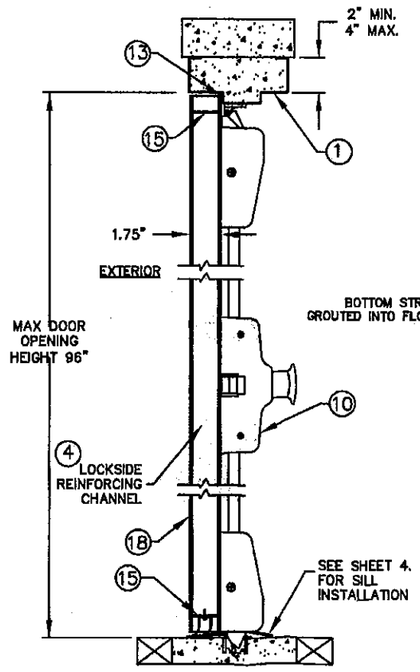

THREE-POINT LATCHING EXIT DEVICE.
SECTIONS B-9, B-10 (SEE SHT.1)

FLOOR LATCHING DETAIL
SURFACE VERTICAL ROD
EXIT DEVICE

FLOOR LATCHING DETAIL
CONCEALED VERTICAL ROD
EXIT DEVICE

MIN LATCH THROW: TOP=3/4"
BOTTOM=1/2"

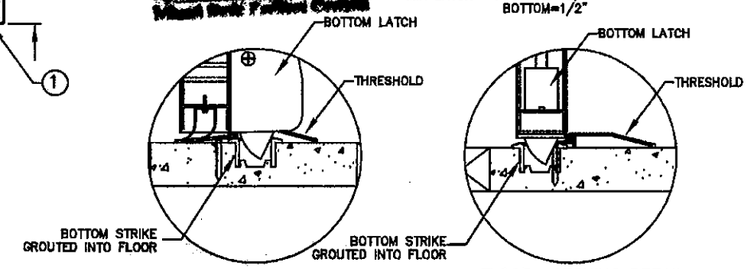

PRODUCT REVISED
as complying with the Florida
Building Code
Acceptance No 12-0305.13
Expiration Date MAY 05, 2015
By Ishaq I. Chaus
Miami Dade Product Control

REVISIONS					
LTR	DESCRIPTION			DATE	APPROVED
A	APPROVAL	DWG	YMF	05/20/07	
B	REVISED	DWG	RAP	10/08/07	
C	REVISED	DWG	RAP	12/03/07	
D	REVISED	DWG	YMF	01/24/08	
E	REVISED	DWG	YMF	04/09/08	
F	REVISED	DWG	YMF	06/02/08	
G	REVISED	PER_MDBCCO	YMF	02/06/09	
H	REVISED	DWG	YMF	03/18/09	
J	REVISED	PER_MDBCCO	YMF	04/06/10	

4/14/10
Gordon Thomas, P.E. — Date
3759 Blossom Court
Mason, OH 45040
Florida # 46718

NOTES:

1. FOR MAXIMUM DOOR & UNIT OPENING SIZES SEE ELEVATION SHEET 1 AND TABLE 1 ON SHT 2 OF 11.
2. SEE SHEET 4 FOR ANCHOR INSTALLATION DETAILS.

PRODUCT RENEWED
as complying with the Florida
Building Code
Acceptance No 10-0209.06
Expiration Date MAY 5 2015
By Ishaq I. Chaus
Miami Dade Product Control
Division

BEND RADIUS

THIRD ANGLE PROJECTION

DRAWN	YMF	DATE 05/20/07
CHECKED		
APPROVED		
ENG. APPVL.	JPD	10/12/07

Ingersoll Rand
Security Technologies

TITLE MIAMI-DADE PRODUCT APPROVAL

VERTICAL CROSS SECTIONS FOR FLUSH DOUBLE DOORS.

SIZE	FLAT	DWG NO.	REV
		IRFD07	J

SCALE: NTS | AUTOCAD | SHEET 11 OF 11