MIAMI-DADE COUNTY
DEPARTMENT OF PERMITTING, ENVIRONMENT, AND REGULATORY AFFAIRS (PERA)
BOARD AND CODE ADMINISTRATION DIVISION

MIAMI-DADE COUNTY
PRODUCT CONTROL SECTION
11805 SW 26 Street, Room 208
Miami, Florida 33175-2474
T (786) 315-2590 F (786) 315-2599
www.miamidade.gov/pera/

NOTICE OF ACCEPTANCE (NOA)

Ingersoll-Rand
6810 Hillsdale Court
Indianapolis, IN 46250

SCOPE:

This NOA is being issued under the applicable rules and regulations governing the use of construction materials. The documentation submitted has been reviewed and accepted by Miami-Dade County PERA -Product Control Section to be used in Miami Dade County and other areas where allowed by the Authority Having Jurisdiction (AHJ).

This NOA shall not be valid after the expiration date stated below. The Miami-Dade County Product Control Section (In Miami Dade County) and/or the AHJ (in areas other than Miami Dade County) reserve the right to have this product or material tested for quality assurance purposes. If this product or material fails to perform in the accepted manner, the manufacturer will incur the expense of such testing and the AHJ may immediately revoke, modify, or suspend the use of such product or material within their jurisdiction. PERA reserves the right to revoke this acceptance, if it is determined by Miami-Dade County Product Control Section that this product or material fails to meet the requirements of the applicable building code.

This product is approved as described herein, and has been designed to comply with the Florida Building Code, including the High Velocity Hurricane Zone.

DESCRIPTIO: IR / Steelcraft Double glazed Outswing Commercial Steel Doors w / wo Panic Exit Devices

APPROVAL DOCUMENT: Drawing No "**IRG-D07**" Rev **G**, titled "IR Glass Outswing Double Doors", sheets 1 through 14 of 14, prepared by the manufacturer, dated 05-27-07 and last revised on 04/14/10, signed and sealed by Thomas Gordon, P. E. bearing the Miami-Dade County Product Control Revision stamp with the Notice of Acceptance number and expiration date by the Miami-Dade County Product Control section.

MISSILE IMPACT RATING: Large Missile Impact Resistant

Limitations:

1. See Design Pressures, Sizes, Hardware, glass and Water infiltration limitations in sheet 1& 2 of the drawings.
2. Min .090" thick DuPont's SGP interlayer is required in Superlite II XL glazing detail per test, sheet 8.
2. Option (A) Polystyrene and Expanded polystyrene foam core options (F) in sheet 4 are limited to Atlas EPS (min ρ =1#/ft^3) and Polyisocyanurate El-Foam–H200 (polyurethane, min ρ =2#/ft^3) by Elliott Company.
3. Electrical/Electronic function is not part of this approval, such functions to be reviewed and approved by AHJ.

LABELING: Each unit shall bear a permanent label with the manufacturer's name or logo, Cincinnati, Ohio and series and following statement: "Miami-Dade County Product Control Approved", noted herein.

RENEWAL of this NOA shall be considered after a renewal application has been filed and there has been no change in the applicable building code negatively affecting the performance of this product.

TERMINATION of this NOA will occur after the expiration date or if there has been a revision or change in the materials, use, and/or manufacture of the product or process. Misuse of this NOA as an endorsement of any product, for sales, advertising or any other purposes shall automatically terminate this NOA. Failure to comply with any section of this NOA shall be cause for termination and removal of NOA.

ADVERTISEMENT: The NOA number preceded by the words Miami-Dade County, Florida, and followed by the expiration date may be displayed in advertising literature. If any portion of the NOA is displayed, then it shall be done in its entirety.

INSPECTION: A copy of this entire NOA shall be provided to the user by the manufacturer or its distributors and shall be available for inspection at the job site at the request of the Building Official.

This NOA **revises NOA # 10-0209.08** and consists of this page 1 and evidence pages E-1, as well as approval document mentioned above.

The submitted documentation was reviewed by **Ishaq I. Chanda, P.E.**

5/29/12

MIAMI-DADE COUNTY APPROVED

NOA No 12-0305.15
Expiration Date: May 05, 2015
Approval Date: May 31, 2012

NOTICE OF ACCEPTANCE: EVIDENCE SUBMITTED

D. QUALITY ASSURANCE BY

1. Miami Dade Department of Permitting, Environment, and Regulatory Affairs (PERA).

E. MATERIAL CERTIFICATIONS (submitted under file # **10-0209.08**)

1. Notice of Acceptance No. **08-0305.02** issued to Sabic innovative Plastic (Former G.E. Plastic) for "Lexan sheet", expiring on 07/17/2013.
2. Notice of Acceptance No. **11-0624.02** issued to E.I. DuPont DeNemours, for SentryGlas Interlayer", expiring on 01/14/2017.
3. Test Report No. **03NK2370/R145081**, January 21, 2003, issued by Underwriters laboratories Inc for "Surface Burning Characteristics of Building material" per ASTME84-00a and self Ignition per ASTM1929D for "Elfoam H200", issued to Elliott Co. of Indianapolis Inc.
4. Tensile test report # CTLA-776W (0194H), dtd 02/25/02 prepared by CTL, Architectural Division, sheet samples, tested per ASTM E8, signed & sealed by Ramesh Patel, P.E.
5. Tensile Test report No. A103W1-Test 1, 2 & 3 dated 23 APR 03 per ASTME-8 for steel face sheet, prepared by Certified Testing laboratory, signed and sealed by Ramesh Patel, P.E.
6. Test Report No. **3094867SAT-001**, April 13, 2006, issued by Intertek for "Surface Burning Characteristics of Building material" per ASTME84 and self Ignition per ASTM1929D for "EPS", issued to Falcon Foam, a Div of Atlas Roofing, re-named as "ATLAS EPS'.
7. Test Report No. **16206-122543 (1015P200(3))**, dated November 29, 2004 for " Surface Burning Characteristics of Building material" per ASTME84 and self Ignition per ASTM1929D for "Polyisocyanurate" issued by Omega Point Laboratories, Inc. to Elliot Company, Indianapolis, Indiana.

F. STATEMENTS

1. Letter of conformance to FBC 2010 "No financial interest" dated 02/15/12, signed and sealed by Gordon Thomas, P.E.
2. Statement letter of conformance to FBC 2007 and no financial interest, dated Feb. 03, 2010, prepared, signed and sealed by Gordon Thomas, P.E.
3. Laboratory Compliance statement issued as part of test report.
4. Addendum letters dated Feb. 04, 2009 for test reports NCTL210-3549-1 and NCTL-210-3511-1, issued by National certified Testing lab.
5. Letter of certification dated 04/20/10, issued by Ingersoll-Rand for electronic CO lock series mechanical /functional parts same as AD, ND and AD-M series.

G. OTHER

1. This NOA **revises NOA # 10-0209.08,** expiring on 05/05/15.
2. Previously consolidates NOA #(s) associated with this files are # **10-0209.08, 07-0829.05, 03-0908.03, 04-0303.03, 05-0325.02, 08-0508.07** and **08-0715.03.**
3. Consolidation Test proposal # **06-2468**, dated 04/27/07 approved by BCCO.
4. IR Locks & Panic devices brochures / catalogs supplied by manufacturer.

Ishaq I. Chanda

Ishaq I. Chanda, P.E.
Product Control Examiner
NOA No 12-0305.15
Expiration Date: May 05, 2015
Approval Date: May 31, 2012

NOTICE OF ACCEPTANCE: EVIDENCE SUBMITTED

A. DRAWINGS

1. Manufacturer's parts and sections drawings (submitted under file # **10-0209.08**)
2. Drawing No "**IRG-D07**" Rev **G**, titled "IR Glass Outswing Double Doors", sheets 1 through 14 of 14, prepared by the manufacturer, dated 05-27-07 and last revised on 04/14/10, signed and sealed by Thomas Gordon, P.E.

B. TESTS (Submitted file # **10-0209.08**)

1. Test report on
   1) Uniform Static Air Pressure Test, Loading per TAS 202-94
   2) Large Missile Impact Test per FBC, TAS 201-94
   3) Cyclic Wind Pressure Loading per FBC, TAS 203-94
   4) Forced Entry Test, per PA 202-94

Along with manufacturer's parts and section drawings of double flush outswing steel doors, marked by National Certified Testing Lab, Test Reports No. **NCTL-210- 3580-2,** dated March 25, 2009, signed and sealed by Gerry Ferrara, P. E.

2. Test report (transferred from file # **07-0829.03**)
   1) Air Infiltration Test, per TAS 202-94
   2) Uniform Static Air Pressure Test, Loading per TAS 202-94
   3) Large Missile Impact Test per FBC, TAS 201-94
   4) Cyclic Wind Pressure Loading per FBC, TAS 203-94
   5) Forced Entry Test, per PA 202-94

Along with manufacturer's parts and section drawings of double glazed outswing steel doors, marked by Certified Testing Lab, Test Reports No(s). **CTLA-776W** dated February 20, 2002, **CTLA-975W** dated Jan 23, 2003, **CTLA-882W** dated Aug 29, 2002, **CTLA-1035W-2** dated Feb. 11, 2003, **CTLA-1086-W** dated Nov. 17, 2003, all signed and sealed by Ramesh Patel, P.E. (Note: Test report CTLA-1035W has been revised by an addendum letter dated Feb 20, 2009, signed and sealed by Ramesh Patel, P.E.)

Also manufacturer's parts and section drawings of glazed outswing double steel doors, marked by Certified Testing Lab, Test Reports No(s). **NCTL-210-3232-1** dated 02/24/06 and **NCTL-210-3357-1** dated Dec 28, 2006, signed and sealed by Gerard J. Ferrara, P.E.

3. Additional test reports
   1) Uniform Static Air Pressure Test, Loading per FBC TAS 202-94.
   2) Water Resistance Test per FBC TAS 202-94

Along with marked-up drawings and installation diagram of double steel commercial doors, prepared by National Certified Testing Laboratories Inc., Test Report No. **NCTL- 210-03-0514-11,** dated August 31, 2004, **NCTL- 210-3044-1,** dated August 31, 2004, **NCTL- 210-3549-1,** dated August 26, 2008 and **NCTL- 210-3511-1** dated 04/09/08, all signed and sealed by Gerard J. Ferrara, P. E.

Note: Test report No(s): NCTL210-3549-1 and NCTL-210-3511-1 have been revised by an addendum letter, issued by Lab, dated Feb. 04, 2009, signed & sealed by Gerard J. Ferrara, P. E.

C. CALCULATIONS (Submitted file # **10-0209.08**)

1. Statement of compliance & anchor verification evaluation report, dated 12/18/2007 and last revised on 06/18/2008, prepared, signed & sealed by Thomas Gordon., P.E.
2. Evaluation report for Hinges dated 09/01/04, prepared, signed & sealed by Thomas Gordon., P.E.

Ishaq I. Chanda

Ishaq I. Chanda, P.E.
Product Control Examiner
NOA No 12-0305.15
Expiration Date: May 05, 2015
Approval Date: May 31, 2012

RIM EXIT HARDWARE MULLION.

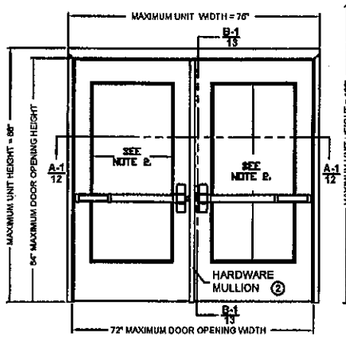

1	DESIGN PRESSURE RATING, PSF	
	WHERE WATER INFILTRATION REQUIREMENT IS NEEDED	WHERE WATER INFILTRATION REQUIREMENT IS NOT NEEDED
	±60 SEE TABLE 3 ON SHT. 5	±60 SEE TABLE 4 ON SHT. 5

RIM EXIT HARDWARE MULLION.

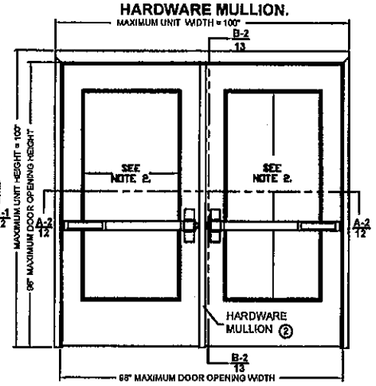

2	DESIGN PRESSURE RATING, PSF	
	WHERE WATER INFILTRATION REQUIREMENT IS NEEDED	WHERE WATER INFILTRATION REQUIREMENT IS NOT NEEDED
	±50 SEE TABLE 3 ON SHT. 5	±50 SEE TABLE 4 ON SHT. 5

RIM EXIT HARDWARE MULLION.

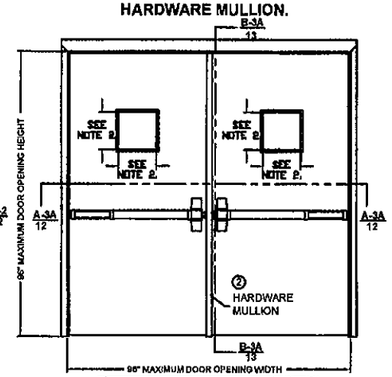

3A	DESIGN PRESSURE RATING, PSF	
	WHERE WATER INFILTRATION REQUIREMENT IS NEEDED	WHERE WATER INFILTRATION REQUIREMENT IS NOT NEEDED
	±75 SEE TABLE 3 ON SHT. 5	±90 SEE TABLE 4 ON SHT. 5

RIM EXIT HARDWARE MULLION.

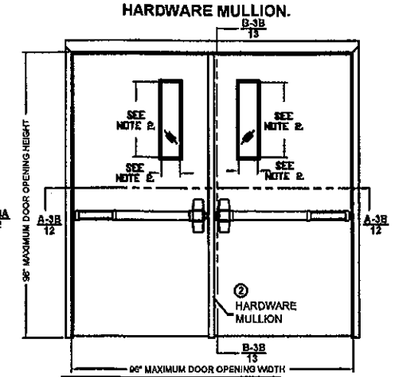

3B	DESIGN PRESSURE RATING, PSF	
	WHERE WATER INFILTRATION REQUIREMENT IS NEEDED	WHERE WATER INFILTRATION REQUIREMENT IS NOT NEEDED
	±75 SEE TABLE 3 ON SHT. 5	±90 SEE TABLE 4 ON SHT. 5

Gordon Thomas, P.E.
3759 Blossom Court
Mason, OH 45040
Florida # 46718

4/14/10
Date

REVISIONS				
LTR	DESCRIPTION		DATE	APPROVED
A	APPROVAL DWG	YMF	05/20/07	
B	APPROVAL DWG	RAP	11/26/07	
C	APPROVAL DWG	RAP	12/14/07	
D	REVISED DWG	YMF	10/22/08	
E	REVISED DWG	YMF	02/05/09	
F	REVISED DWG	YMF	01/04/10	
G	REVISED DWG	YMF	04/08/10	

SURFACE VERTICAL ROD EXIT

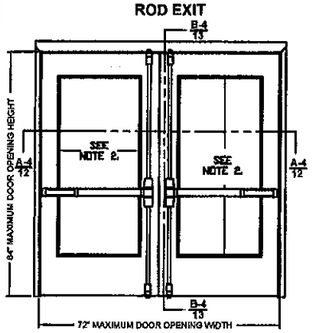

4	DESIGN PRESSURE RATING, PSF	
	WHERE WATER INFILTRATION REQUIREMENT IS NEEDED	WHERE WATER INFILTRATION REQUIREMENT IS NOT NEEDED
	±60 SEE TABLE 3 ON SHT. 5	±60 SEE TABLE 4 ON SHT. 5

CONCEALED VERTICAL ROD EXIT

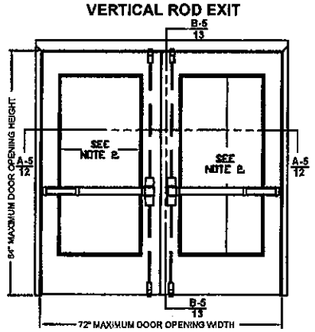

5	DESIGN PRESSURE RATING, PSF	
	WHERE WATER INFILTRATION REQUIREMENT IS NEEDED	WHERE WATER INFILTRATION REQUIREMENT IS NOT NEEDED
	±60 SEE TABLE 3 ON SHT. 5	±60 SEE TABLE 4 ON SHT. 5

THREE-POINT LATCHING EXIT HARDWARE MULLION

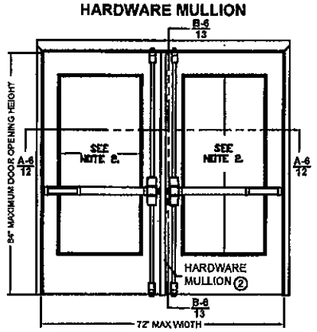

6	DESIGN PRESSURE RATING, PSF	
	WHERE WATER INFILTRATION REQUIREMENT IS NEEDED	WHERE WATER INFILTRATION REQUIREMENT IS NOT NEEDED
	±60 SEE TABLE 3 ON SHT. 5	±60 SEE TABLE 4 ON SHT. 5

THREE-POINT LATCHING EXIT FIXED HOLLOW METAL MULLION

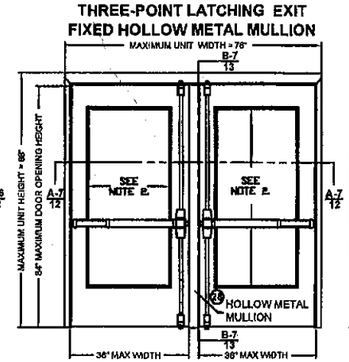

7	DESIGN PRESSURE RATING, PSF	
	WHERE WATER INFILTRATION REQUIREMENT IS NEEDED	WHERE WATER INFILTRATION REQUIREMENT IS NOT NEEDED
	±60 SEE TABLE 3 ON SHT. 5	±60 SEE TABLE 4 ON SHT. 5

THREE-POINT LATCHING EXIT HARDWARE MULLION

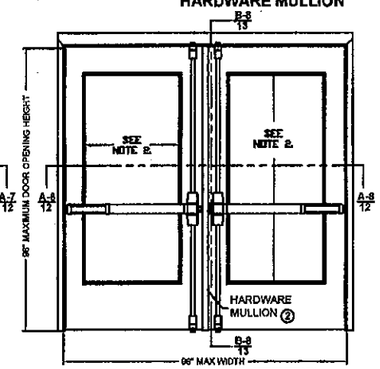

8	DESIGN PRESSURE RATING, PSF	
	WHERE WATER INFILTRATION REQUIREMENT IS NEEDED	WHERE WATER INFILTRATION REQUIREMENT IS NOT NEEDED
	±50 SEE TABLE 3 ON SHT. 5	±50 SEE TABLE 4 ON SHT. 5

DETAIL 'C' MEETING DOOR EDGES

DOOR CONFIGURATIONS: 10, 11
Z-ASTRAGAL ON
INACTIVE LEAF

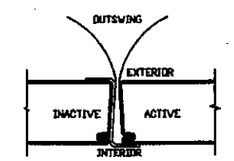

DOOR CONFIGURATIONS: 1, 2, 3A, 3B, 6, 8
HARDWARE MULLION

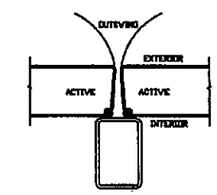

DOOR CONFIGURATIONS: 4 & 5
NO ASTRAGAL / NO MULLION
BOTH DOORS ACTIVE

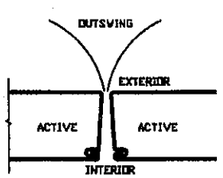

DOOR CONFIGURATION: 7 & 9
FIXED HOLLOW METAL MULLION

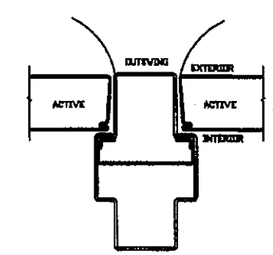

THREE-POINT LATCHING EXIT FIXED HOLLOW METAL MULLION

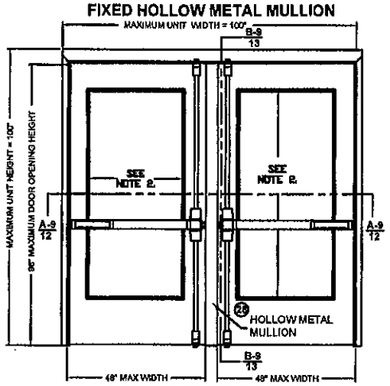

9	DESIGN PRESSURE RATING, PSF	
	WHERE WATER INFILTRATION REQUIREMENT IS NEEDED	WHERE WATER INFILTRATION REQUIREMENT IS NOT NEEDED
	±50 SEE TABLE 3 ON SHT. 5	±50 SEE TABLE 4 ON SHT. 5

SURFACE BOLTS / MORTISE LOCK

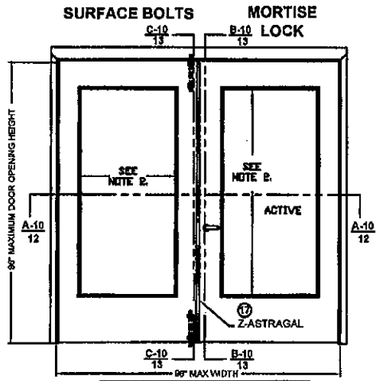

10	DESIGN PRESSURE RATING, PSF	
	WHERE WATER INFILTRATION REQUIREMENT IS NEEDED	WHERE WATER INFILTRATION REQUIREMENT IS NOT NEEDED
	±50 SEE TABLE 3 ON SHT. 5	±50 SEE TABLE 4 ON SHT. 5

SURFACE BOLTS / CYLINDRICAL LOCK (MIN. 1/2" THROW LATCH)

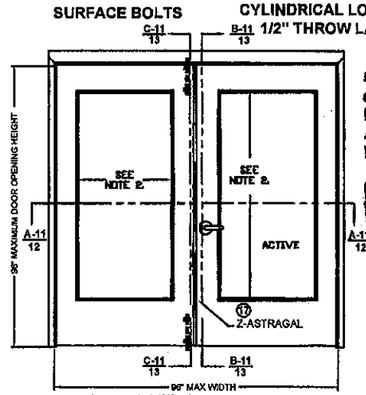

11	DESIGN PRESSURE RATING, PSF	
	WHERE WATER INFILTRATION REQUIREMENT IS NEEDED	WHERE WATER INFILTRATION REQUIREMENT IS NOT NEEDED
	±50 SEE TABLE 3 ON SHT. 5	±50 SEE TABLE 4 ON SHT. 5

PRODUCT REVISED
as complying with the Florida Building Code
Acceptance No 12-0305.15
Expiration Date MAY 05 2015
Ishaq I. Chand
Miami-Dade Product Control Division

PRODUCT RENEWED
as complying with the Florida Building Code
Acceptance No 10-0209.08
Expiration Date MAY 5 2015
By Ishaq I. Chand
Miami Dade Product Control Division

NOTES:
1. INTERIOR VIEWS ARE SHOWN FOR ALL ELEVATIONS
2. SEE TABLE 1 ON SHEET 2 FOR HARDWARE APPLICATIONS, LIMITATIONS & MAXIMUM GLASS SIZE
3. SEE SHEET 3 FOR HINGE REQUIREMENTS
4. SEE SHEET 4 FOR ANCHORING TYPES AND LIMITATIONS
5. SEE SHEET 5 FOR WEATHERSTRIPPING INSTALLATION DETAILS AND LIMITATIONS
6. SEE SHEET 3 FOR MAXIMUM OVERALL DOOR UNIT SIZES

BEND RADIUS

THIRD ANGLE PROJECTION

Ingersoll Rand
Security Technologies

TITLE MIAMI-DADE PRODUCT APPROVAL

IR GLASS OUTSWING, DOUBLE DOORS AND HARDWARE CONFIGURATIONS.

DRAWN YMF	DATE 05/20/07	SIZE FLAT	DWG NO. IRGD07	REV G
CHECKED				
APPROVED				
ENG. APPVL JPD	11/15/07	SCALE NTS	AUTOCAD	SHEET 1 of 14

Door Configuration	Maximum Design Pressure, PSF		Maximum Door Opening Size, in.		Maximum Exposed Glazing Size (DLO)*, in.		Locking Hardware Description				Comments
	Positive	Negative	Width	Height	Width	Height	Hardware Family	Model/Series	Strike Models	IR Brand	
1	60	60	72	84	24	64	Rim Exit Device	98/99(F)	299F/499F	Von Duprin	for pairs use (KR)9954 mullion by Von Duprin
								88-F	288	Von Duprin	
								(F)DL-18-R	F570	Monarch	
2	50	50	96	96	34.25	74.5	Rim Exit Device	98/99(F)	299F/499F	Von Duprin	for pairs use (KR)9954 mullion by Von Duprin
								88-F	288	Von Duprin	
								(F)DL-18-R	F570	Monarch	
3A & 3B	90 SEE NOTE 2.	90 SEE NOTE 2.	96	96	12	12	Rim Exit Device	XP98/99(F)	909/954	Von Duprin	for pairs use (KR)9954 mullion by Von Duprin
					4	25					
4	60	60	72	84	24	64	Surface Vertical Rod Exit Device	98/9927(F)	299F-499F top, 304L/284L4 Bottom	Von Duprin	
								(F)18-V	3788 Top, 2130 Bottom	Monarch	
								(F)25-V	3788 Top, 2130 Bottom	Falcon	
5	60	60	72	84	24	64	Concealed Vertical Rod Exit Device	98/9947-F	338 Top, 385A Bottom	Von Duprin	
								33/3547A-F	338 Top, 385A Bottom	Von Duprin	
								F-18-C	4188 Top, 2130 Bottom	Monarch	
								F-25-C	4188 Top, 2130 Bottom	Falcon	
6	60	60	72	84	24	64	Three-Point Latching Device	98/9957(F)	299F/499F Top/Middle, 304L/248L4 Bottom	Von Duprin	for pairs use (KR)9954 mullion by Von Duprin
7	60	60	36	84	24	64	Three-Point Latching Device	98/9957(F)	299F/499F Top/Middle, 304L/248L4 Bottom	Von Duprin	NOTE 3
8	50	50	96	96	34.25	74.5	Three-Point Latching Device	98/9957(F)	299F/499F Top/Middle, 304L/248L4 Bottom	Von Duprin	
9	50	50	48	96	34.25	74.5	Three-Point Latching Device	98/9957(F)	299F/499F Top/Middle, 304L/248L4 Bottom	Von Duprin	NOTE 3
10	50	50	96	96	34.25	74.5	Mortise Lock	L/LV9000/AD MS	10-072	Schlage	Function w/o deadbolt, 3/4" min. throw latch
								L/LV9400/AD MS	10-072	Schlage	Function with deadbolt, 3/4" min. throw latch & 1" min. throw bolt
								M	ANSI	Falcon	function with or without deadbolt, 3/4" min. throw latch & 1" min. throw bolt (if applicable)
								5500	ANSI	Locknetics/ Schlage	Function with autobolt, 3/4" min. throw latch
11	50	50	96	96	34.25	74.5	Cylindrical Lock	D/ND/AD CYL	10-025	Schlage	1/2" throw latch
								T	ANSI	Falcon	1/2" throw latch
								5100	ANSI	Locknetics	1/2" throw latch

TABLE 1.

REVISIONS				
LTR	DESCRIPTION		DATE	APPROVED
A	APPROVAL DWG	YMF	05/20/07	
B	REVISED DWG	RAP	11/26/07	
C	REVISED DWG	RAP	12/14/07	
D	REVISED DWG	YMF	10/22/08	
E	REVISED PER_MDBCCD	YMF	02/05/09	
F	REVISED PER_MFR	YMF	05/18/09	
G	REVISED PER_MDBCCD	YMF	04/09/10	

PRODUCT REVISED
as complying with the Florida Building Code
Acceptance No. 12-0305.15
Expiration Date 5/5/15
By Ishaq I. Chaudhri
Miami Dade Product Control

PRODUCT RENEWED
as complying with the Florida Building Code
Acceptance No. 10-0209.08
Expiration Date MAY 5, 2015
By Ishaq I. Chaudhri
Miami Dade Product Control Division

Gordon Thomas, P.E.
3759 Blossom Court
Mason, OH 45040
Florida # 46718
Date 4/14/10

NOTES:
1. SEE SHEETS 9, 10 &, 11 FOR LOCKING HARDWARE. FOR DOOR CONFIGURATIONS 10 & 11 INACTIVE LEAF REQUIRES IVES SB360 SURFACE BOLT TOP AND BOTTOM .
2. DOOR CONFIGURATIONS 3A & 3B ARE RATED FOR MAXIMUM DESIGN PRESSURE UP TO +75 PSF WHEN WATER INFILTRATION REQUIREMENT IS NEEDED, AND ±90 PSF WHEN WATER INFILTRATION REQUIREMENT IS NOT NEEDED.
3. DOOR CONFIGURATIONS 7 & 9 ARE FOR USE ON TWO DOORS WITH FIXED HOLLOW METAL MULLION.
3. * DLO - DAYLIGHT OPENING, SAME AS EXPOSED GLASS OR FINISHED OPENING.

BEND RADIUS

THIRD ANGLE PROJECTION

DRAWN YMF	DATE 05/20/07	Ingersoll Rand Security Technologies
CHECKED		TITLE MIAMI-DADE PRODUCT APPROVAL
APPROVED		GLASS OUTSWING DOORS AND HARDWARE CONFIGURATIONS IR COMMERCIAL DOOR OPENING DOUBLE GLASS DOORS.
ENG. APPVL JPD	11/15/07	SIZE FLAT · DWG NO. IRGD07 · REV G · SCALE: NTS · AUTOCAD · SHEET 2 of 14

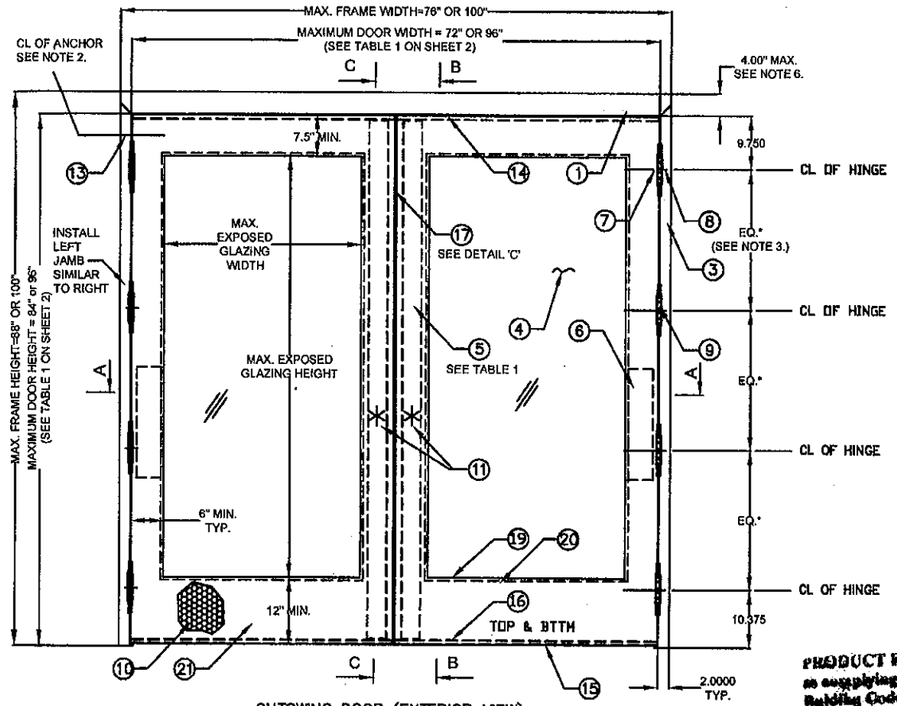

OUTSWING DOOR (EXTERIOR VIEW)
ALL DIMENSIONS TYPICAL UNLESS SPECIFIED OTHERWISE

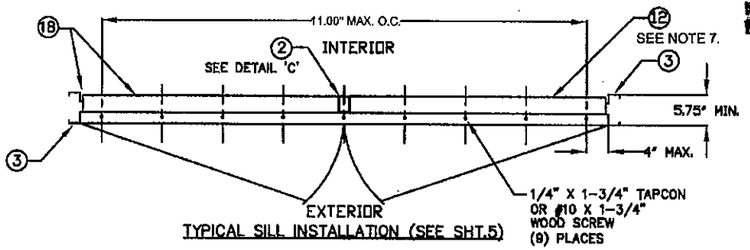

TYPICAL SILL INSTALLATION (SEE SHT.5)

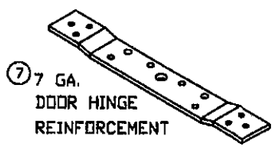

⑦ 7 GA. DOOR HINGE REINFORCEMENT

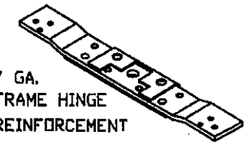

⑧ 7 GA. FRAME HINGE REINFORCEMENT

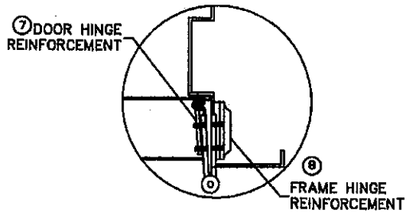

HINGE DETAIL 'L'

Gordon Thomas, P.E.
3759 Blossom Court
Mason, OH 45040
Florida # 48718
Date 4/14/10

PRODUCT RENEWED
as complying with the Florida Building Code
Acceptance No 10-0209.08
Expiration Date 01/14/2015
By Ishaq I. Chanda
Miami Dade Product Control Division

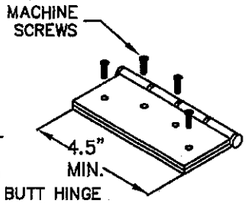

⑨ BUTT HINGE
MIN SIZE 4.5" X 4.5" STD. WT. (.134" MIN.)
IVES 5BB1/3CB1, HAGER 1279
STANLEY F179/1900

PRODUCT REVISED
as complying with the Florida Building Code
Acceptance No 12-0305.15
Expiration Date 5/5/15
By Ishaq I. Chanda
Miami Dade Product Control Division

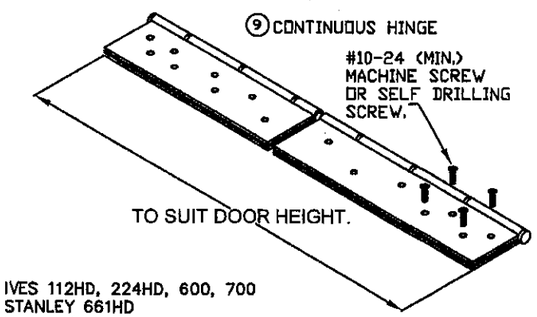

IVES 112HD, 224HD, 600, 700
STANLEY 661HD
SELECT SL11HD
HAGER 790-900 & 780-224HD
MARKAR FM-300 & HG305
ABH A500, A240HD

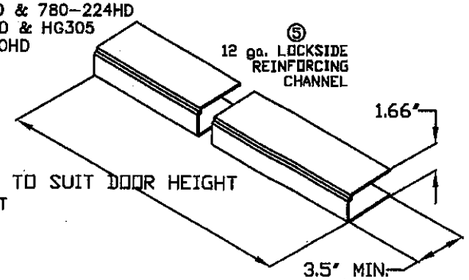

NOTES:
1. ONE ROW OF PS074 WEATHERSTRIPPING PER JAMB AND HEAD. INSTALL PER SHT. 5.
2. ANCHOR REQUIREMENTS: SEE SHEET 4 FOR APPROVED ANCHORS AND INSTALLATION
3. HINGE REQUIREMENTS: 4.5" STD WT. MIN.
   FOR DOOR OPENING UP TO 90" HIGH – MIN (3) HINGES
   FOR DOOR OPENING OVER 90" – 96" HIGH – MIN (4) HINGES
   STD LOCATIONS: 9.75" FROM RABBET IN HEAD TO CL OF TOP HINGE
   10.38" FROM FLOOR TO CL OF BOTTOM HINGE, EQUALLY SPACED IN BETWEEN. HINGE LOCATIONS MAY VARY, MAX SPACING DO NOT EXCEED 35.5" APPROVED CONTINUOUS HINGE MODELS: IVES 112 HD, 224HD, 600, 700, MARKAR FM-300, HG-305, STANELY 661HD, HAGER 780-224HD, 790-900, SELECT SL11HD, ABH A500, A240HD.
4. SEE SHEET 2 TABLE 1 FOR AVAILABLE STANDARD OPENING SIZES AND SPECIFICATIONS.
5. HARDWARE INSTALLATION AS PER MANUFACTURER'S INSTRUCTIONS.
6. 4" FACE HEAD IS AVAILABLE FOR FRAMES.
7. APPLY CAULK AS NEEDED.
8. WEATERSTRIPPING SEE SHT #5.
9. SEE SHEET 13 FOR SECTION A–A, SEE SHEET 14 FOR SECTIONS B–B AND C–C.
10. INSTALL REINFORCEMENT CHANNELS AROUND EACH LITE-CUTOUT.
11. ELECTRICAL INSTALLATION IS UNDER SEPARATE APPROVAL AND MUST BE REVIEWED BY CORRESPONDING AUTHORITY.
12. OPTIONAL POWER TANSFERS, AND/OR "SIGNAL SWITCH" MAY BE USED AS ALLOWED BY CODE AND IT DOES NOT EFFECT THE MECHANICAL PROPERTIES OF EXIT DEVICE AND/OR INHIBIT EGRESS.
13. SILL SHALL BE ANCHORED PER INSTALLATION DETAIL ON THIS SHEET.
14. ITEMS 22 THROUGH 26 REQUIRED ONLY IF WATER INFILTRATION IS NEEDED.
15. QUANTITY WILL INCREASE WHEN USED WITH HOLLOW METAL MULLION. SEE SHT 6 FOR DETAILS.

REVISIONS

LTR	DESCRIPTION		DATE	APPROVED
A	APPROVAL DWG.	YMF	05/20/07	
B	REVISED DWG.	RAP	11/26/07	
C	REVISED DWG.	RAP	12/14/07	
D	REVISED DWG.	YMF	12/14/08	
E	REVISED PER_MDBCCD	YMF	02/05/09	
F	REVISED PER_MDBCCD	YMF	02/01/10	
G	REVISED PER_MDBCCD	YMF	04/08/10	

TABLE 2

ITEM	QUANTITY	DESCRIPTION		MATERIAL	SIZE	
1	1	HEAD SEE SHT 6 ASTM A366		.053" MIN. STL	MAX. 100"	SEE ELEVATION
2	1	VON DUPRIN (KR) 9954 HDWE MULLION USED W/RIM HDWE		.123" A500 STL	MAX. 96" HEIGHT	
3	2	HINGE JAMB SEE SHT 6 ASTM A366		.053" MIN. STL	MAX. 100" HEIGHT	
4	2	LEXAN 9034 BY GE.		.25" MIN.	35.406" X 75.656" MAX.	
		LAMINATED GLASS WITH SENTRYGLAS PLUS (DuPont)		.562" MIN.		
		SUPERLITE II-XL BY SAFTI WITH SENTRYGLAS PLUS (DuPont)		1.0" MIN.		
5	2	LOCK SIDE REINFORCEMENT CHANNEL		.093" MIN. STL	3.5 X 93.44 MAX (SEE ELEV.)	
6	2	HINGE SIDE PANIC REINFORCEMENT		.067" MIN. STL	MAX. 20"	
7	NOTE 3.	HINGE REINFORCEMENT DOOR ASTM A621		.167" MIN. STL.	1.28" X 9.19"	
8	NOTE 3.	HINGE REINFORCEMENT FRAME ASTM A621		.167" MIN. STL.	1.3" X 9.187" MAX.	
9	NOTE 3.	4.5" X 4.5" BUTT HINGES (SEE THIS SHT.)		.134 MIN.	(8) #12-24 MS PER HINGE	
		OPTIONAL CONTINUOUS HINGE (SEE THIS SHT.)		.067" MIN. STL/.12 ALUM	MAX. 95"	
10	2	CORE MATERIAL (SHEET 4):	A) HONEYCOMB B) STEEL STIFFENED C & F) POLYSTYRENE D) POLYURETHANE/POLYISOCYANURATE E) MINERAL BOARD TEMPERATURE RISE CORE			
11	2	LOCKING HARDWARE – SEE SHEET 2 TABLE 1.				
12	1	THRESHOLD SILL W/BUMPER GASKET (SEE TABLES 3&4, SHT.5) 1) ZERO 566A 2) NAT'L GUARD 950A		.100" ALUM. 6063 T5	5.50"X0.5"X96"MAX.-DOUBLE	
13	NOTE 2.	JAMB ANCHOR ASTM A924		SEE SHEET 6		
14	NOTE 14.	PS074 WEATHER STRIPPING		TPE	MAX. 24'	
15	2	FAS-SEAL DOOR SWEEP		TPE	MAX. 48"	
16	4	END CHANNEL ASTM A924 (14 GA – INVERTED)			.69" X 1.66" X 48" MAX.	
17	1	SPLIT ASTRAGAL SET OR Z-ASTRAGAL (NOT REQUIRED WITH HOLLOW METAL MULLION)		SEE SHEET 5		
18	AS NEEDED	BUTYL RUBBER OR 100% SILICONE				
19	2	GLAZING HOLDING TRIM			34.25" X 74.5" EXPOSED GLASS MAX.	
		#1) DEZIGNER TRIM		.035" MIN. STL		
		#2) STEEL OVERLAPPING TRIM UP TO 3/4" GLASS				
		#3) STEEL OVERLAPPING TRIM FOR 5/8" GLASS AND THICKER				
		#4) HIGH SECURITY VISION FRAME	SG-10 BY ANEMOSTAT	.093" MIN. STL.		
			VLF-S10 BY AIR LOUVERS	.123" MIN. STL.		
20	NOTE 10.	CUTOUT REINFORCEMENT CHANNEL (18 GA)		.047" MIN. STL	0.5" X 1.66" X 75.5" MAX.	
21	2	DOOR SLAB (16 OR 14 GA)		SEE SHEET 6	4' X 8' MAX.	
22	1	BY ZERO INT'L	DOOR SEAL No.8144FS	TPE	MAX. 24'	SEE NOTE 13
		BY STEELCRAFT	DOOR SEAL PS074			
23	2 NOTE 14.	BY ZERO INT'L	DOOR SWEEP No.539	TPE	MAX. 96'	
		BY NGP	DOOR SWEEP No.202N			
24	2	BY ZERO INT'L	DOOR SWEEP No.139	SEE SHEET 5	MAX. 48'	
		BY NGP	OMIT			
25	2	BY ZERO INT'L	ADJUSTABLE STOP No.475	TPE	MAX. 48'	
		BY NGP	ADJUSTABLE STOP No.170N			
26	2	BY ZERO INT'L	RAIN DRIP No.11	SEE SHEET 5	MAX. 48'	
		BY NGP	DRIP CAP No.16A			
27	2	TOP CAP GALV. A60 ASTM A924		.020" MIN. STL	0.5" X 1.76" X 48" MAX.	
28	1	HOLLOW METAL MULLION		SEE SHEET 6.	96" MAX.	
29	1	IVES 360 12" SURFACE BOLT				

BEND RADIUS

THIRD ANGLE PROJECTION

DRAWN	YMF	DATE 05/20/07
CHECKED		
APPROVED		
ENG. APPVL	JPD	11/15/07

Ingersoll Rand
Security Technologies

TITLE MIAMI-DADE PRODUCT APPROVAL

H-SERIES GLASS DOUBLE DOORS OUTSWING CONFIGURATIONS
IR HARDWARE

SIZE	FLAT	DWG NO.	REV
		IRGD07	G

SCALE: NTS AUTOCAD SHEET 3 of 14

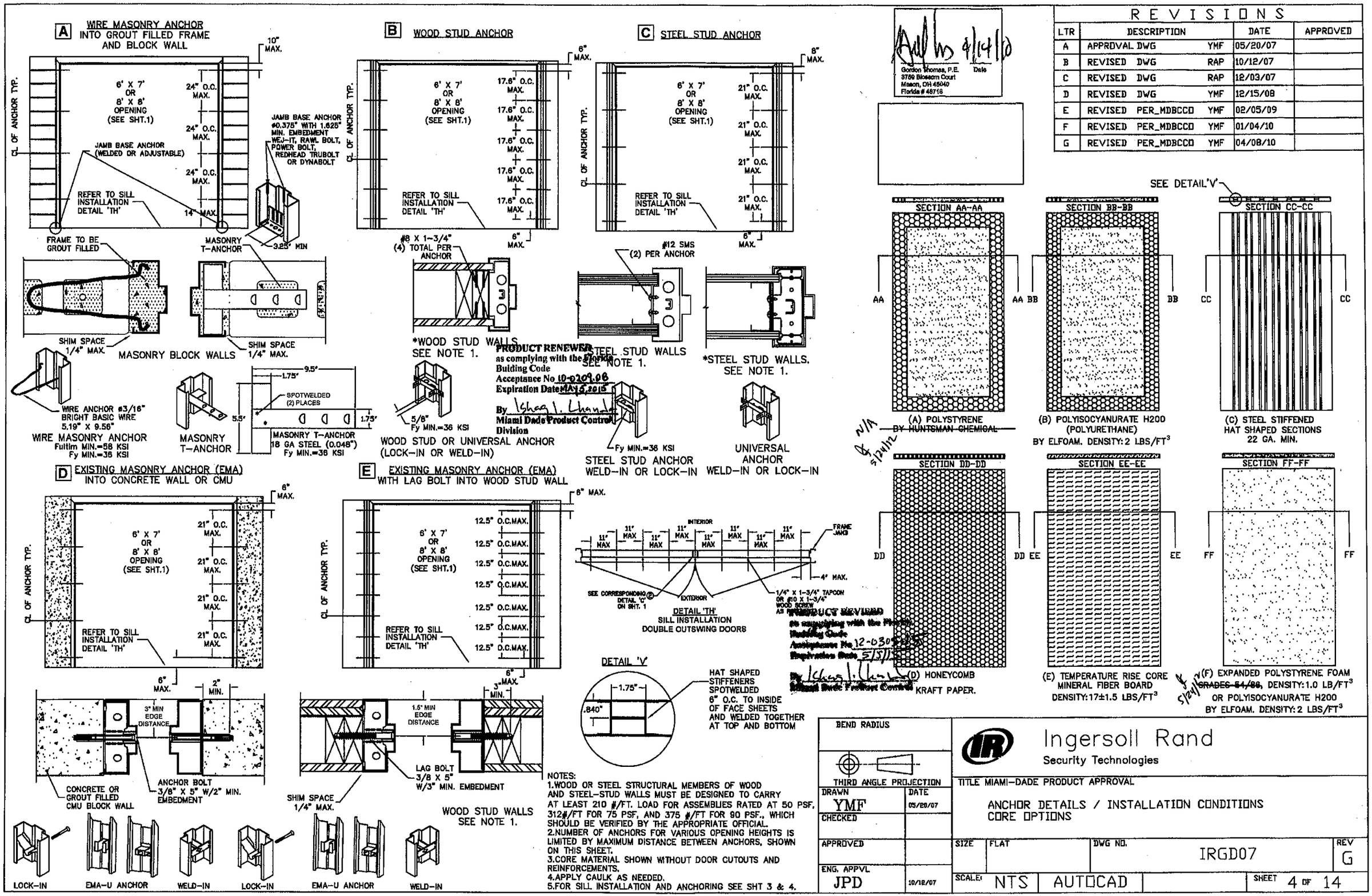

PRODUCT RENEWED as complying with the Florida Building Code Acceptance No 10-0209.06 Expiration Date MAY 5, 2015 By Ishaq I. Chanda Miami Dade Product Control Division

PRODUCT REVIEWED as complying with the Florida Building Code Acceptance No 12-0309.02 Expiration Date 5/5/12 By Ishaq I. Chanda Miami Dade Product Control

Gordon Thomas, P.E. 3759 Blossom Court Mason, OH 45040 Florida # 46716 Date 4/14/10

REVISIONS				
LTR	DESCRIPTION		DATE	APPROVED
A	APPROVAL DWG	YMF	05/20/07	
B	REVISED DWG	RAP	10/12/07	
C	REVISED DWG	RAP	12/03/07	
D	REVISED DWG	YMF	12/15/08	
E	REVISED PER_MDBCCD	YMF	02/05/09	
F	REVISED PER_MDBCCD	YMF	01/04/10	
G	REVISED PER_MDBCCD	YMF	04/08/10	

NOTES:
1. WOOD OR STEEL STRUCTURAL MEMBERS OF WOOD AND STEEL-STUD WALLS MUST BE DESIGNED TO CARRY AT LEAST 210 #/FT. LOAD FOR ASSEMBLIES RATED AT 50 PSF, 312#/FT FOR 75 PSF, AND 375 #/FT FOR 90 PSF., WHICH SHOULD BE VERIFIED BY THE APPROPRIATE OFFICIAL.
2. NUMBER OF ANCHORS FOR VARIOUS OPENING HEIGHTS IS LIMITED BY MAXIMUM DISTANCE BETWEEN ANCHORS, SHOWN ON THIS SHEET.
3. CORE MATERIAL SHOWN WITHOUT DOOR CUTOUTS AND REINFORCEMENTS.
4. APPLY CAULK AS NEEDED.
5. FOR SILL INSTALLATION AND ANCHORING SEE SHT 3 & 4.

BEND RADIUS

THIRD ANGLE PROJECTION

DRAWN	YMF	DATE 05/20/07
CHECKED		
APPROVED		
ENG. APPVL	JPD	10/12/07

Ingersoll Rand
Security Technologies

TITLE MIAMI-DADE PRODUCT APPROVAL

ANCHOR DETAILS / INSTALLATION CONDITIONS
CORE OPTIONS

SIZE	FLAT	DWG NO.	REV
		IRGD07	G

SCALE: NTS | AUTOCAD | SHEET 4 OF 14

TABLE 3.

PERIMETER SEAL HARDWARE WHEN WATER INFILTRATION REQUIREMENT DOES APPLY

ITEM NUMBER SHT 3. TABLE 2	DESCRIPTION	ALLOWABLE DESIGN PRESSURE, PSF	MODEL No./ MANUFACTURER	PART DETAIL	INSTALLATION DETAIL
11	THRESHOLD	+75	566/ZERO INT'L	'T1'	'P1'
			950/NGP	'T2'	'P2'
14	FAS-SEAL SWEEP	+75	STEELCRAFT	'S'	'P1' & 'P2'
16	SPLIT ASTRAGAL	+75	328/ZERO INT'L	'GG1'	'N3'
			137/NGP	'GG2'	
19 OR 13	SELF ADHESIVE DOOR SEAL	+75	8144F/ZERO INT'L	'U'	'M' & 'N'
			PS074/STEELCRAFT	'Q'	
20	DOOR SWEEP	+75	539/ZERO INT'L	'W1'	'N'
			202N/NGP	'W2'	
21	DOOR SWEEP	+75	139/ZERO INT'L	'X'	'P1'
22	ADJUSTABLE STOP	+75	475/ZERO INT'L	'Y1'	'M'
			170N/NGP	'Y2'	
23	RAIN DRIP CAP	+75	11/ZERO INT'L	'Z1'	'P1'
			16A/NGP	'Z2'	'P2'
24	DOOR TOP CAP	+75	STEELCRAFT	'R'	'M'

TABLE 4.

PERIMETER SEAL HARDWARE WHEN WATER INFILTRATION REQUIREMENT DOES NOT APPLY

ITEM NUMBER SHT. 3 TABLE 2	DESCRIPTION	MODEL No. MANUFACTURER	PART DETAIL	INSTALLATION DETAIL
11	THRESHOLD	566 BY ZERO INT'L	'T1'	'K'
		950 BY NATIONAL GUARD	'T2'	
14	FAS-SEAL DOOR SWEEP	STEELCRAFT	'S'	'K'
16	SPLIT ASTRAGAL	328 BY ZERO	'GG1'	'N3'
		137 BY NGP	'GG2'	
13	PS-074 SELF ADHESIVE WEATHERSTRIPPING	STEELCRAFT	'Q'	'J' & 'L'
–	–	–	–	–
–	–	–	–	–
–	–	–	–	–
–	–	–	–	–
24	DOOR TOP CAP	STEELCRAFT	'R'	OPTIONAL

Gordon Thomas, P.E.
3759 Blossom Court
Mason, OH 45040
Florida # 46718

4/14/10
Date

PRODUCT REVIEWED
as complying with the Florida Building Code
Application No. 12-0305.15
Expiration Date 5/5/15
By Ishaq I. Hanna
Miami Dade Product Control

REVISIONS				
LTR	DESCRIPTION		DATE	APPROVED
A	APPROVAL DWG	YMF	05/20/07	
B	REVISED DWG	RAP	11/26/07	
C	REVISED DWG	RAP	12/14/07	
D	REVISED DWG	YMF	10/09/08	
E	REVISED PER_MDBCCD	YMF	02/05/09	
F	REVISED PER_MDBCCD	YMF	01/04/10	
G	REVISED PER_MDBCCD	YMF	04/08/10	

PERIMETER SEAL INSTALLATION DETAILS WHEN WATER INFILTRATION REQUIREMENTS DO NOT APPLY

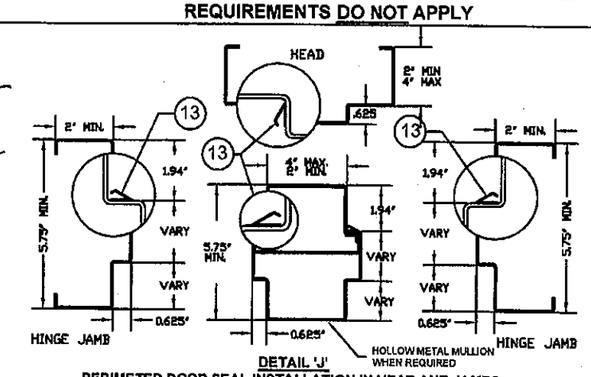

DETAIL 'J'
PERIMETER DOOR SEAL INSTALLATION IN HEAD AND JAMBS

PART DETAILS

UP TO +75 PSF WHEN WATER INFILTRATION REQUIREMENTS APPLY

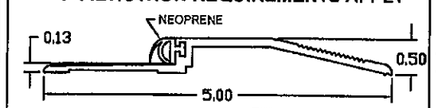

11 DETAIL 'T1'
TYPE 1 THRESHOLD
ZERO INT'L 566 SERIES

UP TO +75 PSF WHEN WATER INFILTRATION REQUIREMENTS APPLY

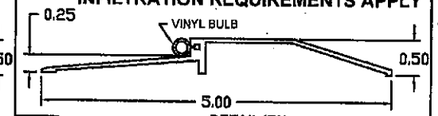

11 DETAIL 'T2'
TYPE 2 THRESHOLD
NATIONAL GUARD 950 SERIES

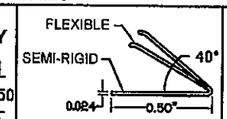

13 DETAIL 'Q'
PS-074
SELF-ADHESIVE WEATHERSTRIPPING

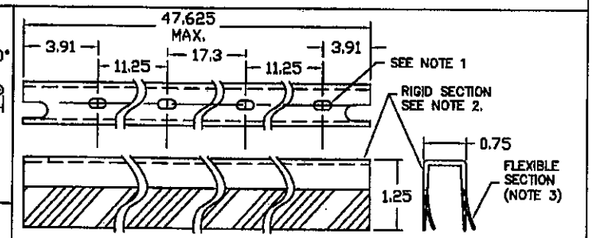

14 DETAIL 'S'
FAS-SEAL DOOR SWEEP

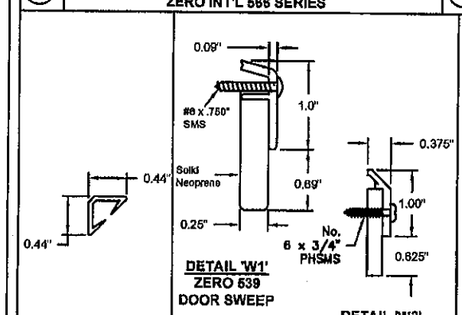

19 DETAIL 'U'
8144F
DOOR SEAL

20 DETAIL 'W1'
ZERO 539
DOOR SWEEP

DETAIL 'W2'
NGP 202
DOOR SEAL

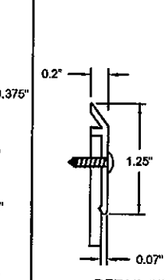

21 DETAIL 'X'
139
DOOR SWEEP

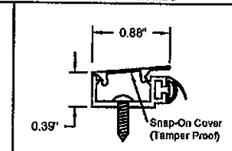

DETAIL 'Y1'
ZERO 475
ADJUSTABLE STOP

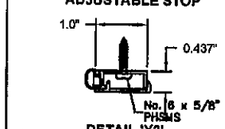

22 DETAIL 'Y2'
NGP 170N
ADJUSTABLE STOP

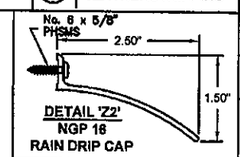

DETAIL 'Z2'
NGP 16
RAIN DRIP CAP

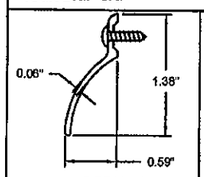

23 DETAIL 'Z1'
ZERO 11
RAIN DRIP CAP

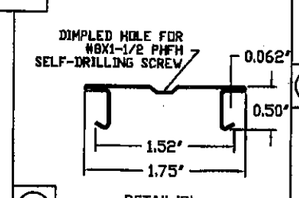

24 DETAIL 'R'
24 GA TOP CAP

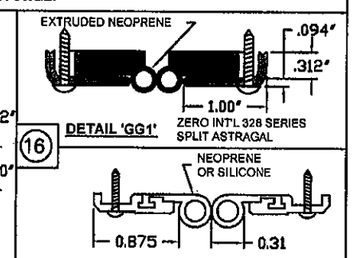

16 DETAIL 'GG1'
ZERO INT'L 328 SERIES
SPLIT ASTRAGAL

DETAIL 'GG2'
NATIONAL GUARD
137 SERIES SPLIT ASTRAGAL

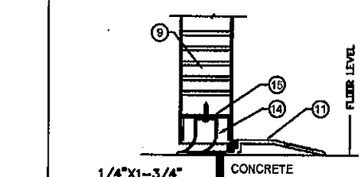

DETAIL 'K'
BOTTOM OF DOOR
WEATHERSTRIPPING AND SILL INSTALLATION

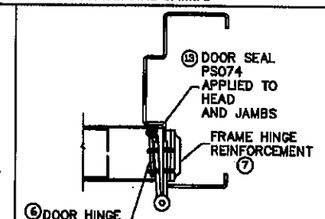

HINGE DETAIL 'L'
HINGE SIDE
WEATHERSTRIPPING INSTALLATION

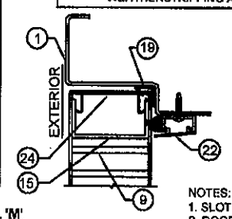

DETAIL 'M'
TOP OF DOOR/HEAD WEATHERSTRIPPING
WHEN WATER INFILTRATION REQUIREMENTS APPLY

PRODUCT RENEWED
as complying with the Florida Building Code
Acceptance No 10-0209.08
Expiration Date MAY 5, 2015
By Ishaq I. Hanna
Miami Dade Product Control Division

NOTES:
1. SLOT LOCATIONS MAY VARY WITH DIFFERENT DOOR WIDTH.
2. DOOR SWEEP RIGID SECTION IS MADE OF PRO-FAX #PD-199 POLYPROPYLENE HOMOPOLYMER.
3. DOOR SWEEP FLEXIBLE SECTION IS MADE OF SANTOPRENE #101-73
4. FAS-SEAL DOOR SWEEP (14), AND THRESHOLD (11) ARE REQUIRED FOR ALL INSTALLATIONS.

PERIMETER SEAL INSTALLATION DETAILS WHEN WATER INFILTRATION REQUIREMENTS APPLY

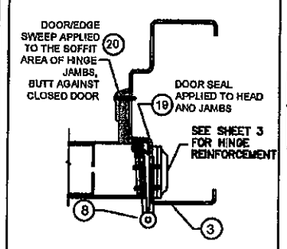

DETAIL 'N1'
HINGE JAMB
SWEEP INSTALLATIION

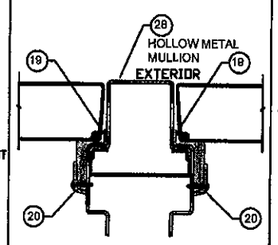

DETAIL 'N2'
HOLLOW METAL MULLION
WEATHERSTRIPPING

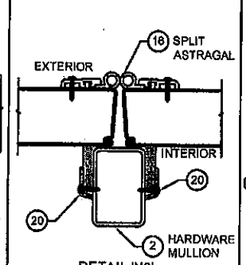

DETAIL 'N3'
HARDWARE MULLION
WEATHERSTRIPPING

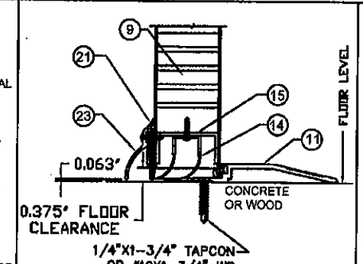

DETAIL 'P1'
BOTTOM OF DOOR
ZERO WEATHERSTRIPPING
AND SILL INSTALLATION

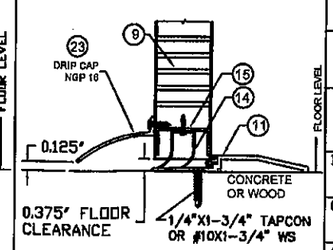

DETAIL 'P2'
BOTTOM OF DOOR
NGP WEATHERSTRIPPING
AND SILL INSTALLATION

BEND RADIUS

THIRD ANGLE PROJECTION

Ingersoll Rand
Security Technologies

DRAWN YMF	DATE 05/20/07	TITLE MIAMI-DADE PRODUCT APPROVAL	
CHECKED		DOUBLE GLASS DOOR PERIMETER SEAL HARDWARE.	
APPROVED		SIZE FLAT	DWG NO. IRGD07 — REV G
ENG. APPVL JPD	10/11/07	SCALE: NTS — AUTOCAD	SHEET 5 of 14

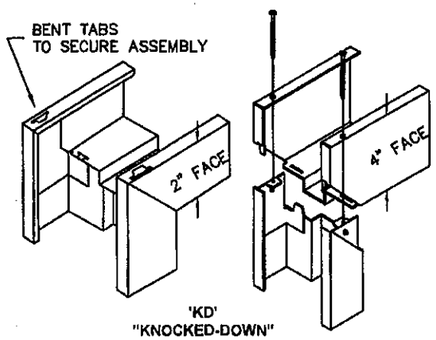

'KD'
"KNOCKED-DOWN"
ASSEMBLY

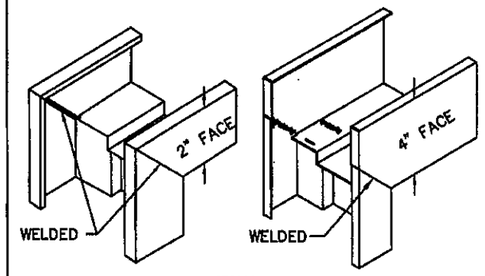

'SUA'
SET-UP AND ARC-WELDED
ASSEMBLY

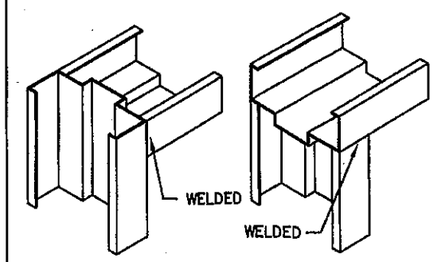

HEAD NOTCHED
AND BUTTED BETWEEN JAMBS

HEAD SITS ON TOP
OF NOTCHED JAMBS

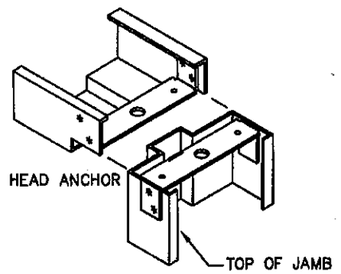

HEAD NOTCHED
AND BOLTED ON TOP OF JAMBS

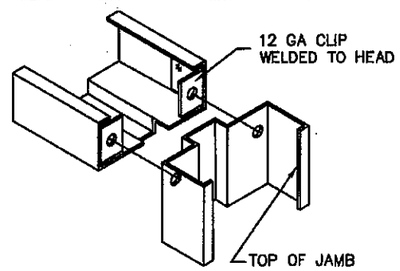

HEAD NOTCHED
AND BOLTED BETWEEN JAMBS

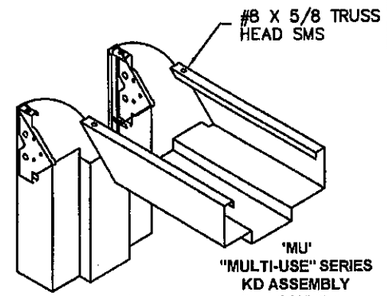

'MU'
"MULTI-USE" SERIES
KD ASSEMBLY
SUA OPTIONAL

Gordon Thomas, P.E.
3759 Blossom Court
Mason, OH 45040
Florida # 46718

Date 4/14/10

PRODUCT REVISED
as complying with the Florida
Building Code
Acceptance No. 12-0305.15
Expiration Date 5/5/15
By [illegible]
Miami Dade Product Control

REVISIONS

LTR	DESCRIPTION			DATE	APPROVED
A	APPROVAL	DWG	YMF	05/20/07	
B	REVISED	DWG	RAP	11/26/07	
C	REVISED	DWG	RAP	12/14/07	
D	REVISED	DWG	YMF	12/14/08	
E	REVISED	PER_MDBCCO	YMF	02/05/09	
F	REVISED	PER_MDBCCO	YMF	01/04/10	
G	REVISED	PER_MDBCCO	YMF	04/08/10	

TABLE 6. AVAILABLE FRAME CONFIGURATIONS

FRAME SERIES	JAMB DEPTH	MAX. OPENING SIZE WIDTH	MAX. OPENING SIZE HEIGHT	MATERIAL DESCR.	MATERIAL GA./MIN. THK
F	5.75" MIN.	8'0"	8'0"	CRS/HRS GALV	16/.053" 14/.067" 12/.099"
				STAINLESS STEEL	16/.053"
MU	5.75" MIN.	8'0"	8'0"	CRS/HRS GALV	16/.053" 14/.067"

TABLE 7. STEEL MECHANICAL PROPERTIES

MATERIAL	ASTM REF.	YIELD, KSI	TENSILE, KSI
CRS	A1008	MIN. 26.5	MIN. 46
HRS	A1011		
GALV: A60	A924		
SS: 304,306	A240	MIN. 31.2	MIN. 73.2

TYPICAL FRAME PROFILE
DOUBLE RABBET

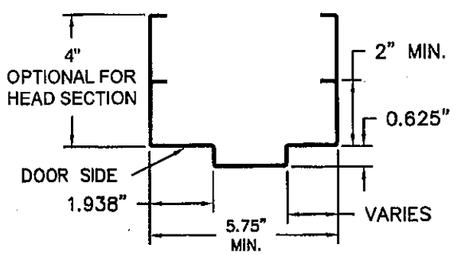

OPTIONAL FRAME PROFILE
SINGLE RABBET

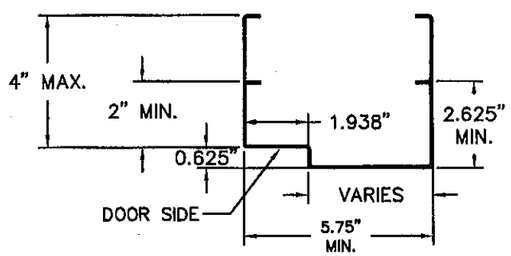

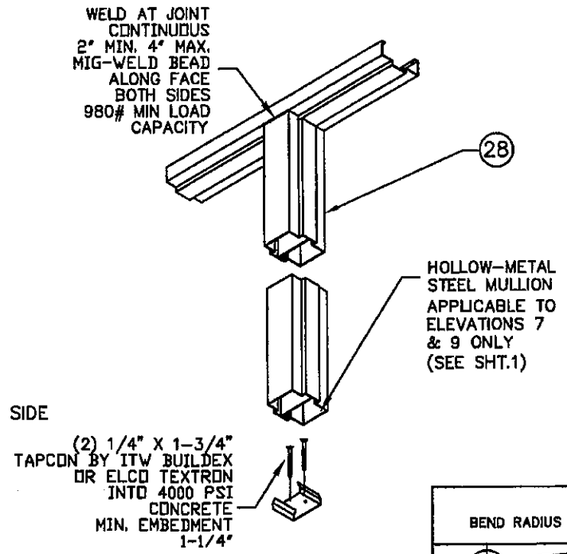

TABLE 5. AVAILABLE DOOR CONFIGURATIONS

CORE MATERIAL PER SHT.4	MAXIMUM OPENING SIZE WIDTH | HEIGHT	SKIN MATERIAL DESCR.	SKIN MATERIAL GA./MIN. THK
HONEYCOMB POLYSTYRENE POLYURETHANE (POLYISOCYANURATE) TEMPERATURE RISE STEEL STIFFENED	VARIES SEE SHEET 2 TABLE 1	CRS GALV	16/.053" 14/.067"
HONEYCOMB POLYSTYRENE POLYURETHANE	VARIES SEE SHEET 2 TABLE 1	STAINLESS STEEL	16/.053"

NOTES:
1. DOOR CONSTRUCTION
1.1. MINIMUM DOOR THICKNESS – 1 3/4"
1.2. DOOR SIZE MAY VARY, SUBJECTED TO COMPLIANCE WITH FLORIDA BUILDING CODE AND PRODUCT AVAILABILITY FROM MANUFACTURER (SEE SHEET 2 FOR AVAILABLE HARDWARE)
2. FRAME CONSTRUCTION
1.1. MINIMUM JAMB DEPTH – 5 3/4", STOP HEIGHT – 5/8"
2.2. FRAMES AVAILABLE AS FLUSH (F–SERIES) AND MULT–USE (MU–SERIES) (SEE TABLE. 6)
3. FOR MATERIAL SPECIFICATIONS REFERENCE SEE TABLE 7.

HOLLOW METAL MULLION
DOUBLE RABBET

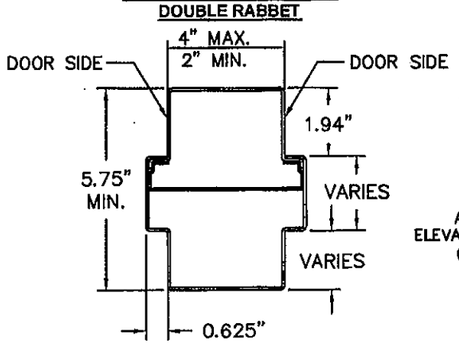

APPLICABLE TO
ELEVATIONS 7 & 9 ONLY
(SEE SHEET 1)

HOLLOW METAL MULLION
SINGLE RABBET

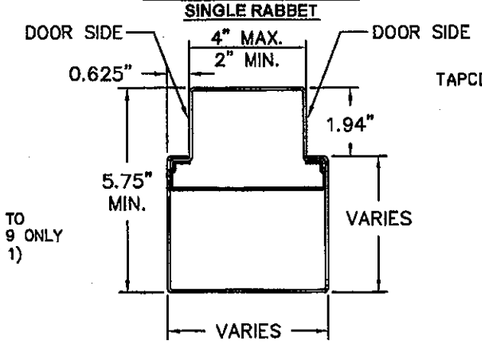

MATERIAL IS PER TABLE 6. MINIMUM THICKNESS IS 0.053" (16 Ga.)
MINIMUM YIELD STRENGTH = 58,000 PSI
MINIMUM TENSILE STRENGTH = 45,700 PSI

PRODUCT RENEWED
as complying with the Florida
Building Code
Acceptance No. 10-0209.08
Expiration Date MAY 5, 2015
By [illegible]
Miami Dade Product Control
Division

BEND RADIUS

THIRD ANGLE PROJECTION

DRAWN	YMF	DATE 05/20/07
CHECKED		
APPROVED		
ENG. APPVL	JPD	11/15/07

Ingersoll Rand
Security Technologies

TITLE MIAMI–DADE PRODUCT APPROVAL
FRAME PROFILE, CORNER DETAILS AND DOOR FRAME MATERIAL, AND SIZE OPTIONS

SIZE	FLAT	DWG NO.	REV
		IRGD07	G

SCALE: NTS | AUTOCAD | SHEET 6 OF 14

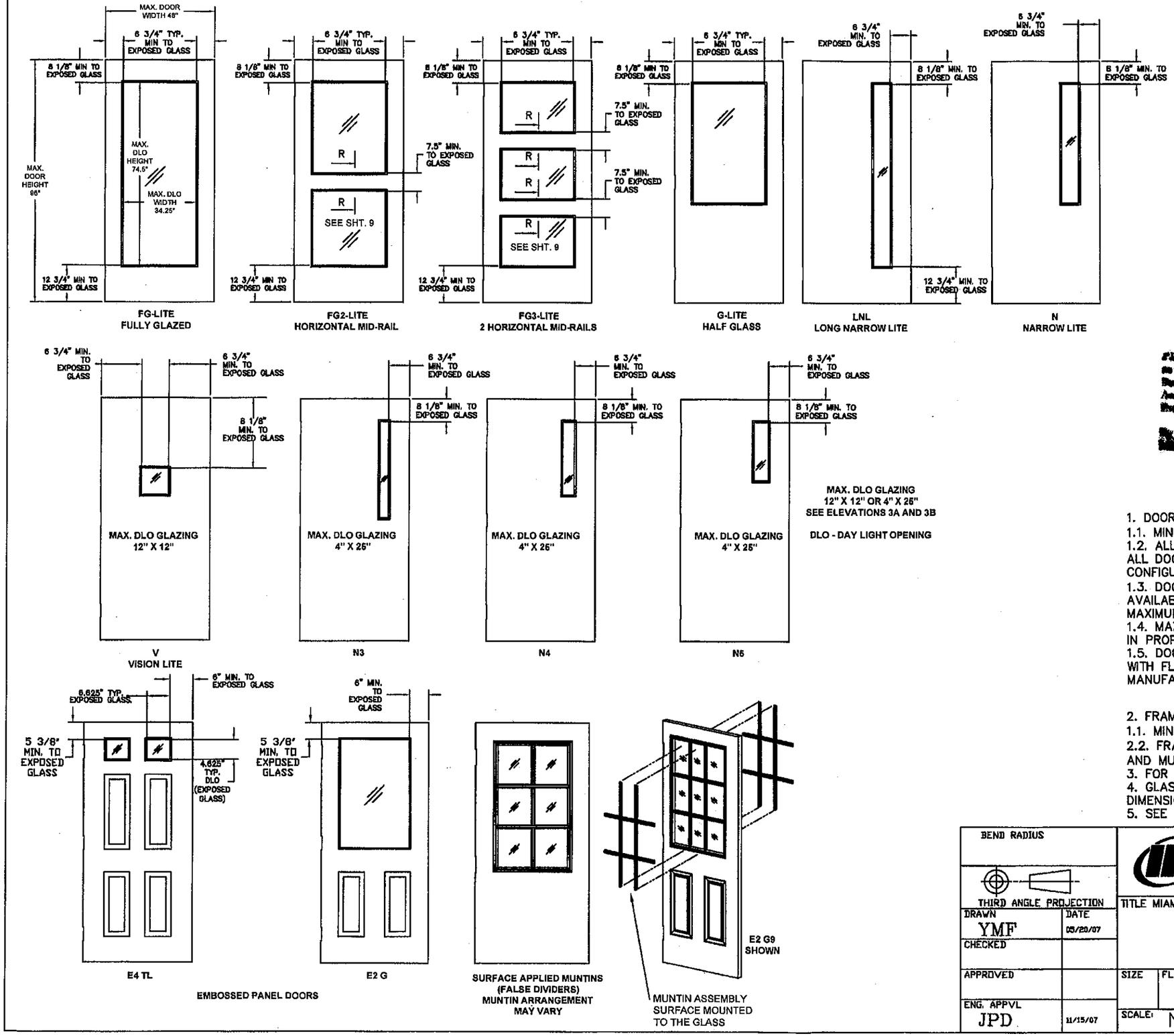

REVISIONS

LTR	DESCRIPTION			DATE	APPROVED
A	APPROVAL	DWG	YMF	05/20/07	
B	REVISED	DWG	RAP	11/26/07	
C	REVISED	DWG	RAP	12/12/07	
D	REVISED	DWG	YMF	12/15/08	
E	REVISED	PER_MDBCCD	YMF	12/15/08	
F	REVISED	PER_MDBCCD	YMF	01/04/10	
G	REVISED	PER_MDBCCD	YMF	04/08/10	

Gordon Thomas, P.E.
3759 Blossom Court
Mason, OH 45040
Florida # 46716
Date 4/14/10

PRODUCT REVISED
as complying with the Florida Building Code
Acceptance No 12-0305.15
Expiration Date 5/5/15
By Shaq I. Chandler
Miami-Dade Product Control Division

PRODUCT RENEWED
as complying with the Florida Building Code
Acceptance No 10-0209.08
Expiration Date May 5, 2015
By Shaq I. Chandler
Miami-Dade Product Control Division

1. DOOR CONSTRUCTION
1.1. MINIMUM DOOR THICKNESS – 1 3/4"
1.2. ALL GLASS LITE TYPES SHOWN ON THIS SHEET ARE AVAILABLE FOR ALL DOOR CONFIGURATIONS SHOWN ON SHEET 1 EXCEPT FOR CONFIGURATIONS 3A AND 3B.
1.3. DOOR CONFIGURATION 3A IS AVAILABLE WITH 'V'–LITE AND 3B IS AVAILABLE WITH N3, N4, AND N5 TYPE LITES.
MAXIMUM GLAZING HEIGHT AND WIDTH AS PER SHEET 2 TABLE 1.
1.4. MAXIMUM DLO GLAZING OPENING SIZE WILL CHANGE IN PROPORTION WITH DOOR SIZE.
1.5. DOOR SIZE MAY VARY, SUBJECTED TO COMPLIANCE WITH FLORIDA BUILDING CODE AND PRODUCT AVAILABILITY FROM MANUFACTURER.

2. FRAME CONSTRUCTION
1.1. MINIMUM JAMB DEPTH – 5 3/4", STOP HEIGHT – 5/8"
2.2. FRAMES AVAILABLE AS FLUSH (F–SERIES) AND MULT–USE (MU–SERIES) (SEE TABLE 6. SHT 6.)
3. FOR MATERIAL SPECIFICATIONS REFERRENCE SEE TABLE 7 ON SHT.6
4. GLASS LIGHTS ARE NOT LIMITED TO THOSE SHOWN, PROVIDED THAT DLO DIMENSIONS ARE MAINTAINED AND NOT EXCEEDED PER LIMITS SHOWN HERE
5. SEE SHEET 8 OF 14 FOR GLAZING DETAILS

BEND RADIUS

THIRD ANGLE PROJECTION

DRAWN YMF	DATE 05/20/07
CHECKED	
APPROVED	
ENG. APPVL JPD	11/15/07

Ingersoll Rand
Security Technologies

TITLE MIAMI–DADE PRODUCT APPROVAL

GLASS DOOR CONFIGURATIONS.

SIZE	FLAT	DWG NO.	REV
		IRGD07	G

SCALE: NTS | AUTOCAD | SHEET 7 of 14

GLAZING TYPE 1

GLAZING DETAIL 'D'
DEZIGNER TRIM OPTION

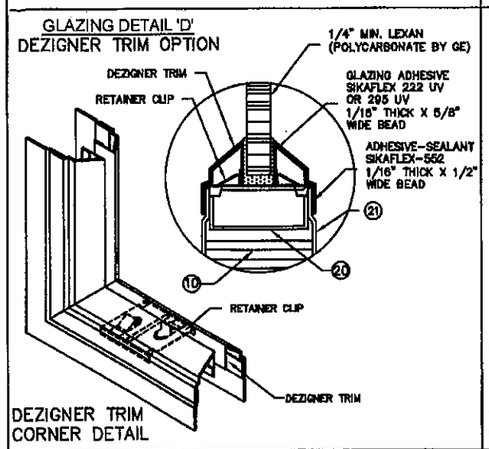

DEZIGNER TRIM
CORNER DETAIL

GLAZING TYPE 1

GLAZING DETAIL 'E'
STEEL TRIM OPTION

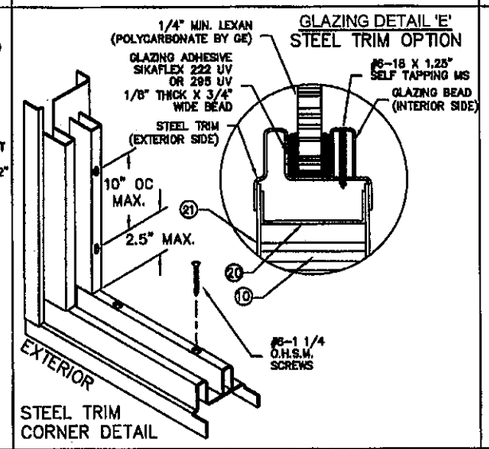

STEEL TRIM
CORNER DETAIL

GLAZING TYPE 2

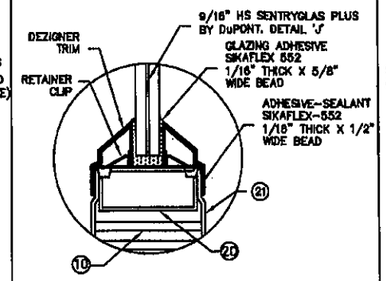

DEZIGNER TRIM

GLAZING TYPE 2

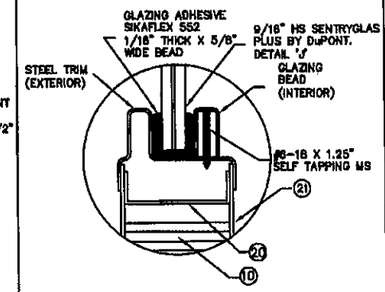

STEEL TRIM

GLAZING DETAIL 'K'
LAMINATED GLASS

LAMINATED GLASS DETAILS

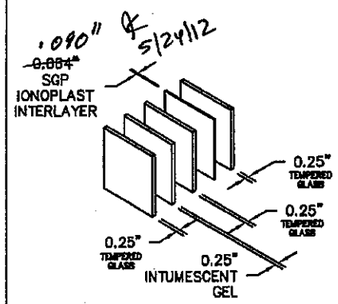

CONSTRUCTION DETAIL 'H'
SUPERLITE II-XL™ BY SAFTI
WITH SENTRYGLAS PLUS™
(SGP™) INTERLAYER
BY DuPONT

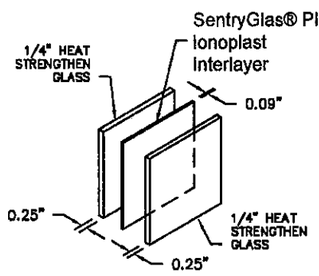

CONSTRUCTION DETAIL 'J'
9/16" HS LAMINATED GLASS WITH
SENTRYGLAS PLUS™ INTERLAYER
(BY DuPONT)

GLAZING TYPE 3

GLAZING DETAIL 'F'
VISION FRAME OPTION

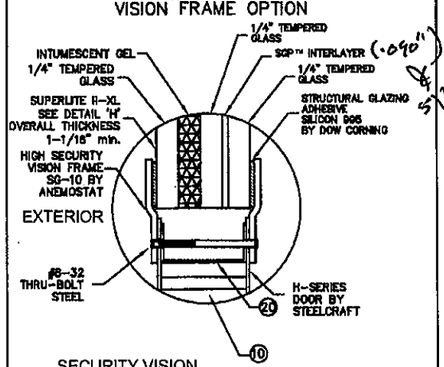

SECURITY VISION
FRAME SG-10 BY ANEMOSTAT
OR VLF-S10 BY AIR LOUVERS
PROFILE SHOWN FOR 1-13/16" GLASS

GLAZING TYPE 3

GLAZING DETAIL 'G'
1" STEEL TRIM OPTION

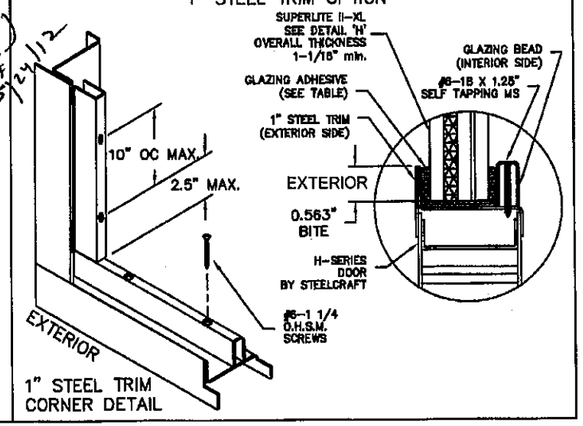

1" STEEL TRIM
CORNER DETAIL

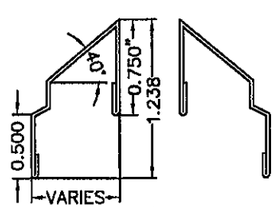

DEZIGNER TRIM
PROFILE
MATERIAL: 24 GA A40 STEEL

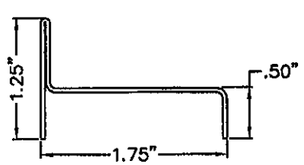

1" STEEL TRIM
MATERIAL: 20 GAGE A40 STEEL

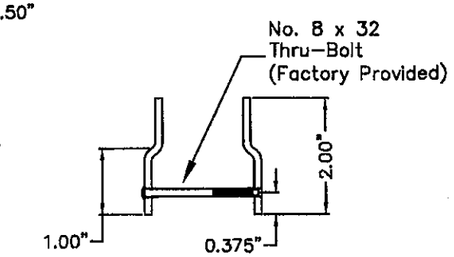

HIGH SECURITY
METAL VISION FRAME
MATERIAL: 12 GAGE OR 10 GAGE
ANEMOSTAT SG-10 AND
AIR LOUVERS VLF-S10

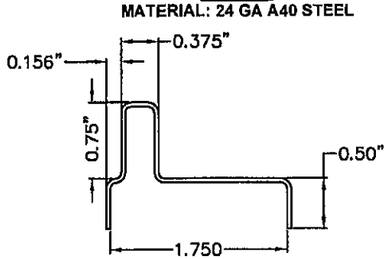

STEEL TRIM
MATERIAL: 20GA A40 STEEL

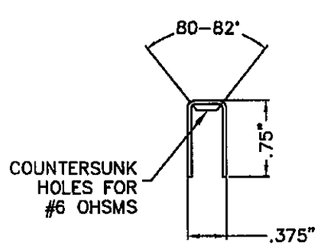

GLAZING BEAD FOR
STEEL OVERLAPPING
TRIMS
20 GAGE A40 STL

PRODUCT REVISED
as complying with the Florida
Building Code
Acceptance No. 12-0305.15
Expiration Date 5/5/15
By Ishaq I. Chanda
Miami Dade Product Control
Division

Gordon Thomas, P.E.
3769 Blossom Court
Mason, OH 45040
Florida # 46718
4/14/10
Date

REVISIONS				
LTR	DESCRIPTION		DATE	APPROVED
A	APPROVAL DWG.	YMF	05/20/07	
B	REVISED DWG.	RAP	11/26/07	
C	REVISED DWG.	RAP	12/12/07	
D	REVISED DWG.	YMF	12/15/08	
E	REVISED PER_MDBCCO	YMF	12/15/08	
F	REVISED PER_MDBCCO	YMF	01/04/10	
G	REVISED PER_MDBCCO	YMF	04/08/10	

NOTES:

1. SEE SHT.1 FOR ELEVATIONS, SHT.2 FOR SIZES AND SHT.6 FOR DOOR & FRAME MATERIAL SPECIFICATIONS.
2. SEE SHT.3 NOTE 2. FOR ANCHOR REQUIREMENTS
3. SEE SHT. 4 FOR WALL CONSTRUCTION AND ANCHORING SYSTEM
4. SEE SHT. 6 FOR AVAILABLE OPENING SIZES, JAMB DEPTHS AND SPECIFICATIONS
5. APPROVED HARDWARE INSTALLATION IS PER MANUFACTURER'S INSTRUCTIONS

PRODUCT RENEWED
as complying with the Florida
Building Code
Acceptance No. 10-0209.08
Expiration Date MAY 6, 2015
By Ishaq I. Chanda
Miami Dade Product Control
Division

TABLE 8.

GLAZING TYPES AND METHODS

TYPE	GLAZING MATERIAL	TRIM TYPE	SEALANT -ADHESIVE	GLAZING ADHESIVE
1	LEXAN BY GE 1/4" OR 1/2" DETAILS 'D' & 'E'	DEZIGNER 1/2" OR 1/4"	SIKAFLEX 552	SIKAFLEX 222UV OR 295UV 1/16" X 5/8" BEAD
		STEEL TRIM		
2	9/16" HS LAMINATED GLASS WITH SENTRYGLAS PLUS™ INTERLAYER (BY DUPONT) DETAIL 'K'	DEZIGNER 1/2"	SIKAFLEX 552	SIKAFLEX 552 OR DOW CORNING 995/975 1/16" X 5/8" BEAD
		STEEL TRIM		
		1" STEEL TRIM		
3	SUPERLITE II-XL™ BY SAFTI WITH SENTRYGLAS PLUS™ INTERLAYER (BY DUPONT) DETAILS 'F' & 'G'	1" STEEL TRIM (DETAIL 'G')	NONE	SIKAFLEX 552 OR DOW CORNING 995/975 1/16" X 5/8" BEAD
		SECURITY VISION FRAME SG-10 BY ANEMOSTAT OR VLF-S10 BY AIR LOUVERS (DETAIL 'F')	NONE	

BEND RADIUS

THIRD ANGLE PROJECTION

DRAWN	YMF	05/20/07
CHECKED		
APPROVED		
ENG. APPVL	JPD	11/15/07

Ingersoll Rand
Security Technologies

TITLE MIAMI-DADE PRODUCT APPROVAL

GLASS TRIM OPTIONS.

SIZE	FLAT	DWG NO.	IRGD07	REV
SCALE: NTS	AUTOCAD		SHEET 8 of 14	G

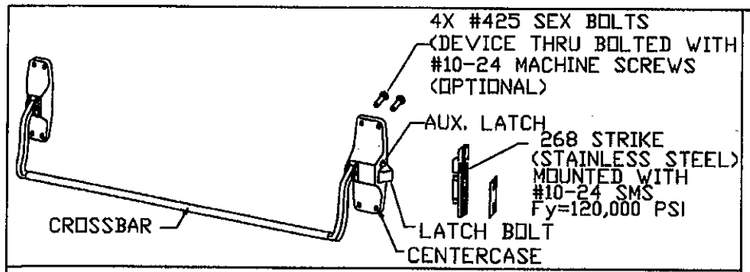

VON DUPRIN 88-F RIM DEVICE, USED IN CONFIGURATIONS: 1 & 2

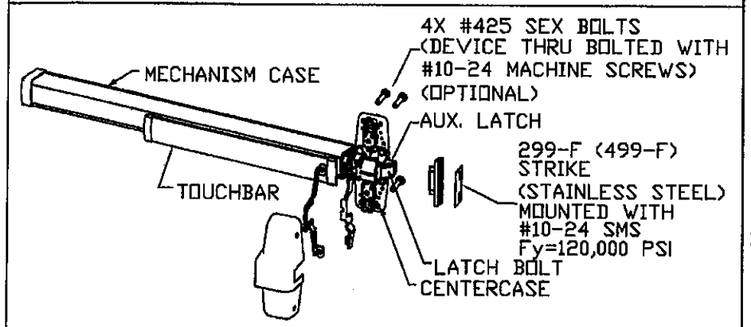

VON DUPRIN 98/99(F) RIM DEVICE
USED IN CONFIGURATIONS: 1 & 2

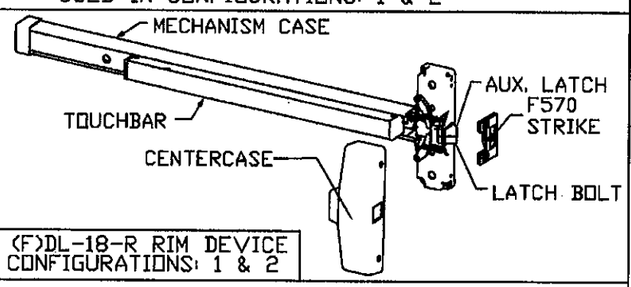

MONARCH (F)DL-18-R RIM DEVICE
USED IN CONFIGURATIONS: 1 & 2

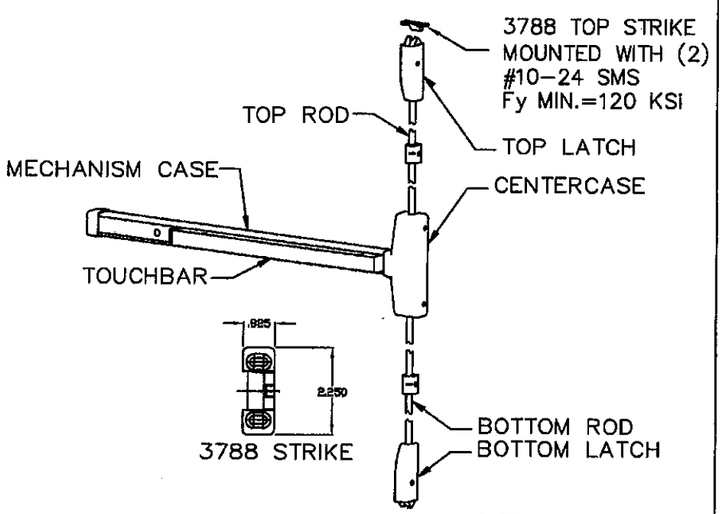

MONARCH (F)18-V SURFACE
VERTICAL ROD EXIT DEVICE
USED IN CONFIGURATIONS: 4

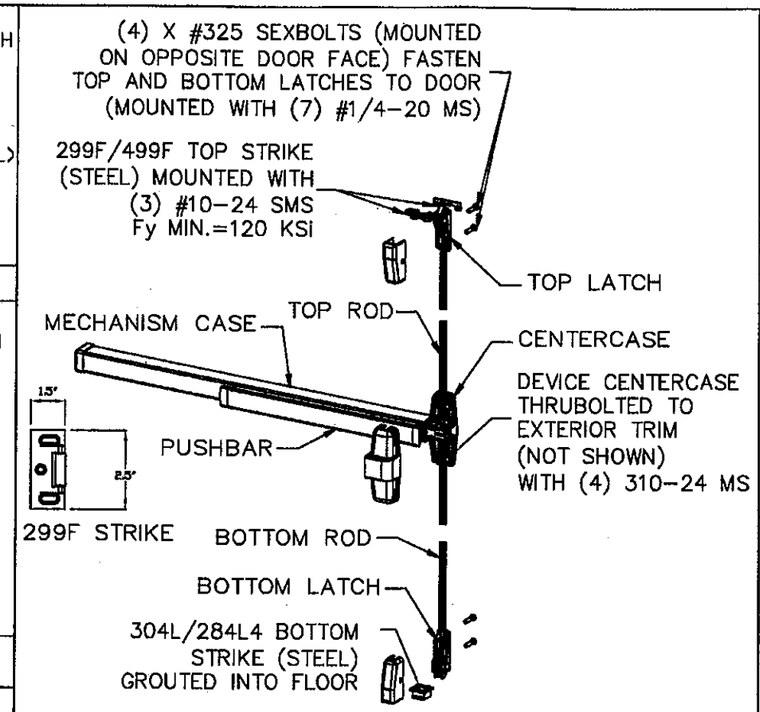

VON DUPRIN 98/9927(F) SURFACE VERTICAL ROD DEVICE
USED IN CONFIGURATIONS: 4

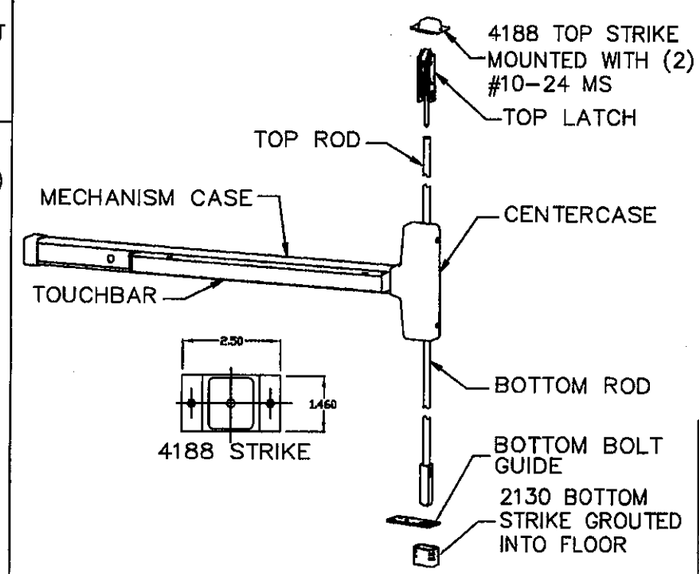

MONARCH F-18-C CONCEALED VERTICAL ROD
EXIT DEVICE
USED IN CONFIGURATIONS: 5

PRODUCT RENEWED
as complying with the Florida
Building Code
Acceptance No 10-0209.08
Expiration Date MAY 5, 2015
By Ishaq I. Chand
Miami Dade Product Control
Division

REVISIONS

LTR	DESCRIPTION			DATE	APPROVED
A	APPROVAL	DWG	YMF	05/20/07	
B	REVISED	DWG	RAP	11/26/07	
C	REVISED	DWG	RAP	12/14/07	
D	REVISED	DWG	YMF	12/14/08	
E	REVISED	PER_MDBCCO	YMF	02/05/09	
F	REVISED	PER_MDBCCO	YMF	01/04/10	
G	REVISED	PER_MDBCCO	YMF	04/08/10	

NOTES:
1. ELECTRICAL FUNCTIONS/INSTALLATION IS NOT PART OF THIS APPROVAL AND TO BE REVIEWED AND APPROVED BY BUILDING OFFICIAL.
2. EXIT HARDWARE OPTIONS:
FOR 98/99 & XP98/99 SERIES - FUNCTIONS E, RX, LX, SS, EL, CX, F; TRIM: ALL APPLICABLE TRIMS AVAILABLE.
FOR 88-F SERIES - FUNCTION E; TRIM: ALL APPLICABLE TRIMS AVAILABLE. PN MODEL OFFERED.
FOR 33/35-F SERIES - FUNCTIONS RX, LX, EL, SS; TRIM: ALL APPLICABLE TRIMS AVAILABLE.
FOR 2670 GUARD-X; TRIM: ALL APPLICABLE TRIMS AVAILABLE.
FOR 18-R, F-18-C & 18-V SERIES - FUNCTIONS DL, EA, HWEA, DE, ELR, F, DM, LM, AE, LK, SM
TRIM: ALL APPLICABLE TRIMS AVAILABLE.

PRODUCT REVISED
as complying with the Florida
Building Code
Acceptance No 12-0305.15
Expiration Date 5/5/15
By Ishaq I. Chand
Miami Dade Product Control

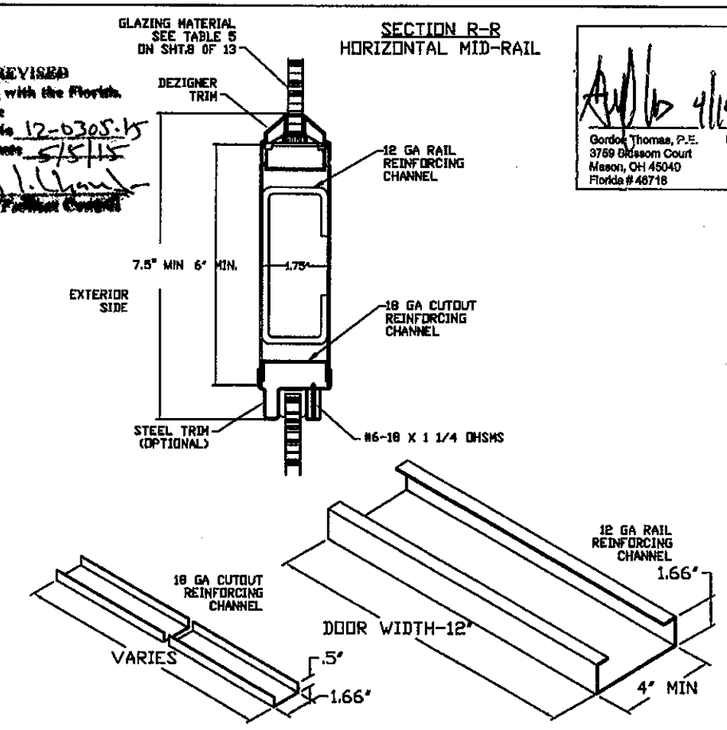

Gordon Thomas, P.E.
3759 Blossom Court
Mason, OH 45040
Florida # 46718
Date 4/14/10

BEND RADIUS

THIRD ANGLE PROJECTION

DRAWN YMF	DATE 05/20/07
CHECKED	CDATE
APPROVED	ADATE
ENG. APPVL JPD	EDATE 11/15/07

Ingersoll Rand
Security Technologies

TITLE MIAMI-DADE PRODUCT APPROVAL

IR EXIT HARDWARE FOR GLASS DOUBLE DOORS.

SIZE	FLAT	DWG NO.	REV
		IRGD07	G

SCALE: NTS | AUTOCAD | SHEET 9 OF 14

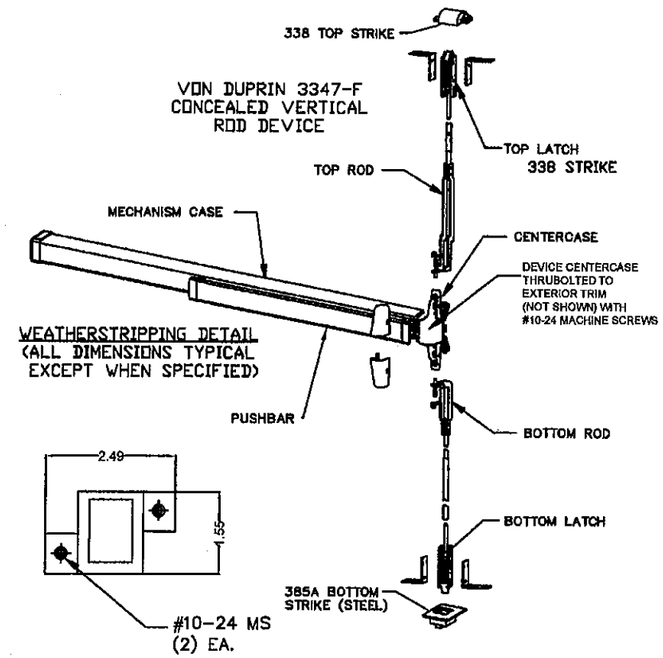

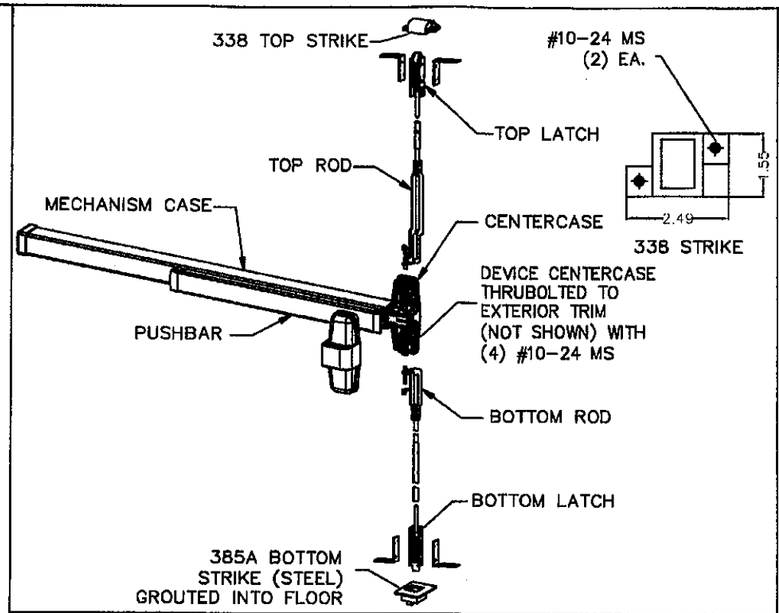

VON DUPRIN 98/9947-F (CONCEALED) VERTICAL ROD
USED IN CONFIGURATION: 5

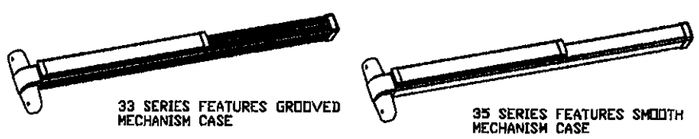

VON DUPRIN 33/3547-F CONCEALED VERTICAL ROD DEVICE
USED IN CONFIGURATIONS: 5

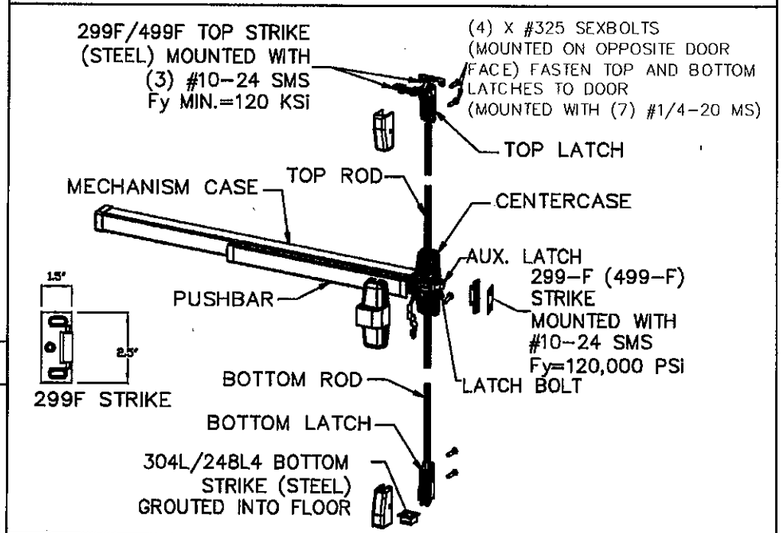

VON DUPRIN 98/9957(F) THREE-POINT EXIT DEVICE
USED IN CONFIGURATIONS: 6,7,8 & 9

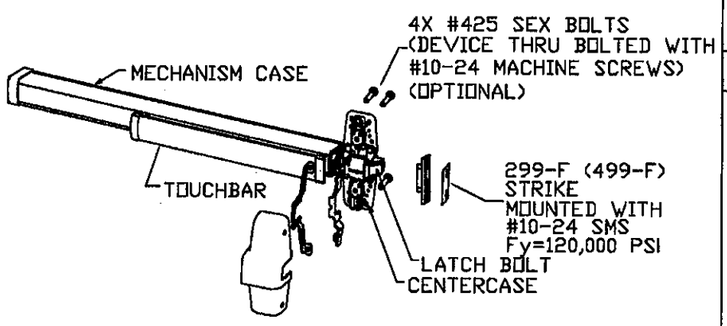

VON DUPRIN XP98/99(F) RIM DEVICE
USED IN CONFIGURATIONS: 3A & 3B

EXIT HARDWARE OPTIONS:
FOR 98/99 & XP98/99 SERIES - FUNCTIONS E, RX, LX, SS, EL, CX, F
TRIM: ALL APPLICABLE TRIMS AVAILABLE.
FOR 88-F SERIES - FUNCTION E
TRIM: ALL APPLICABLE TRIMS AVAILABLE.
PN MODEL OFFERED.
FOR 33/35-F SERIES - FUNCTIONS RX, LX, EL, SS
TRIM: ALL APPLICABLE TRIMS AVAILABLE.
FOR 2670 GUARD-X
TRIM: ALL APPLICABLE TRIMS AVAILABLE.
FOR 18-R F-18-C & 18-V SERIES - FUNCTIONS DL, EA, HWEA, DE, ELR,
F, DM, LM, AE, LK, SM
TRIM: ALL APPLICABLE TRIMS AVAILABLE.

NOTE: ELECTRICAL FUNCTIONS/INSTALLATION IS NOT PART OF THIS APPROVAL AND TO BE REVIEWED AND APPROVED BY BUILDING OFFICIAL.

PRODUCT RENEWED
as complying with the Florida
Building Code
Acceptance No. 10-0209.08
Expiration Date MAY 5, 2015
By Ishaq I. Chund
Miami Dade Product Control
Division

REVISIONS

LTR	DESCRIPTION			DATE	APPROVED
A	APPROVAL	DWG	YMF	05/20/07	
B	REVISED	DWG	RAP	11/26/07	
C	REVISED	DWG	RAP	12/14/07	
D	REVISED	DWG	YMF	12/14/08	
E	REVISED	PER_MDBCCD	YMF	02/05/09	
F	REVISED	PER_MDBCCD	YMF	01/04/10	
G	REVISED	PER_MDBCCD	YMF	04/08/10	

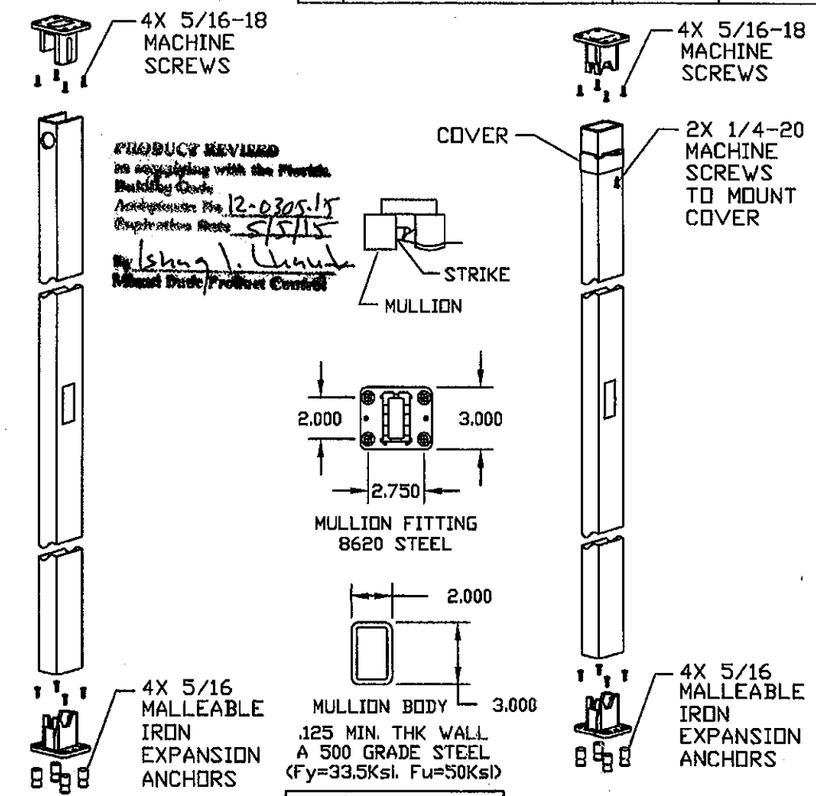

PRODUCT REVIEWED
as complying with the Florida
Building Code
Acceptance No. 12-0305.15
Expiration Date 5/5/15
By Ishaq I. Chund
Miami Dade Product Control

② KR 9954
HARDWARE MULLION
BY VON DUPRIN

Gordon Thomas, P.E. Date
3759 Blossom Court
Mason, OH 45040
Florida # 46718

② 9954
HARDWARE MULLION
BY VON DUPRIN

BEND RADIUS

THIRD ANGLE PROJECTION

DRAWN YMF	DATE 05/20/07
CHECKED	
APPROVED	
ENG. APPVL JPD	11/15/07

Ingersoll Rand
Security Technologies

TITLE MIAMI-DADE PRODUCT APPROVAL

IR EXIT HARDWARE FOR GLASS DOUBLE DOORS.

SIZE	FLAT	DWG NO.	REV
		IRGD07	G
SCALE: NTS	AUTOCAD		SHEET 10 OF 14

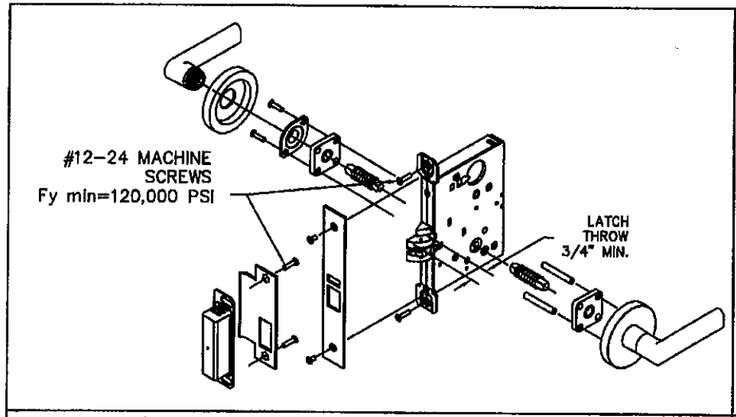

SCHLAGE L/LV 9000 SERIES MORTISE LOCKSET W/O DEADBOLT
USED IN CONFIGURATIONS: 10

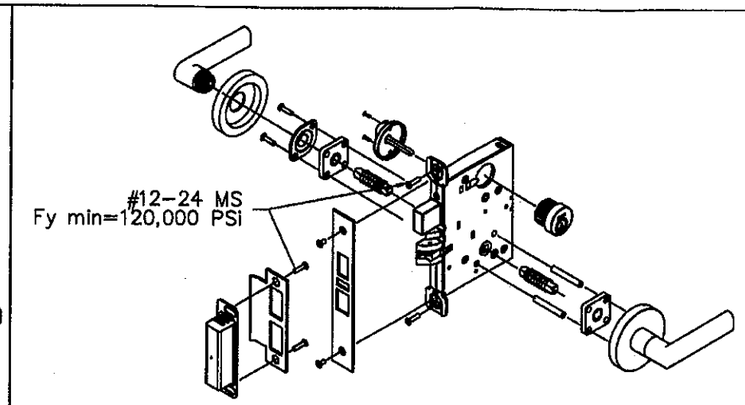

SCHLAGE L/LV 9400 SERIES MORTISE LOCKSET W/ DEADBOLT
USED IN CONFIGURATIONS: 10

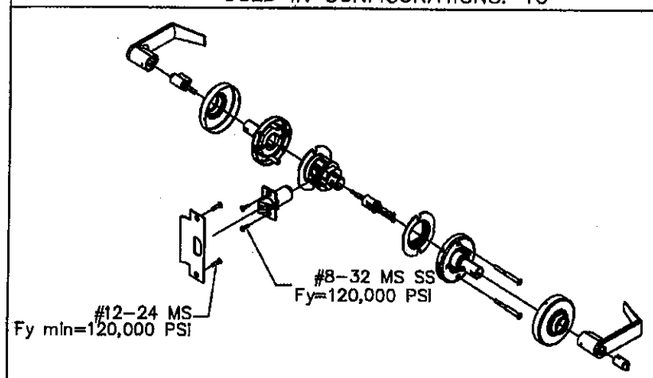

SCHLAGE D/ND-SERIES CYLINDRICAL LEVER LOCKSET
(MIN. 1/2" THROW LATCH). USED IN CONFIGURATIONS: 11

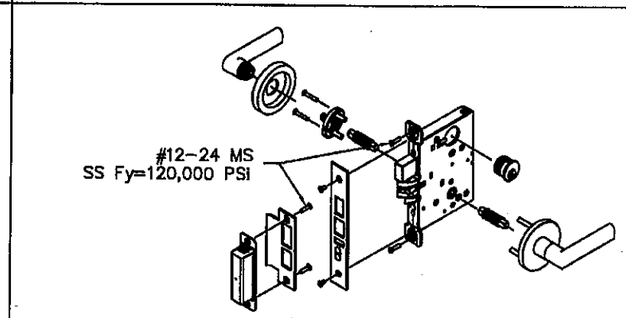

FALCON M-SERIES MORTISE LOCKSET W/ DEADBOLT SHOWN
USED IN CONFIGURATIONS: 10

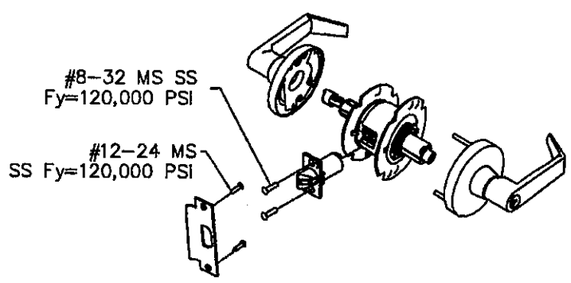

FALCON, T-SERIES CYLINDRICAL LEVER LOCKSET
(MIN. 1/2" THROW LATCH). USED IN CONFIGURATIONS: 11

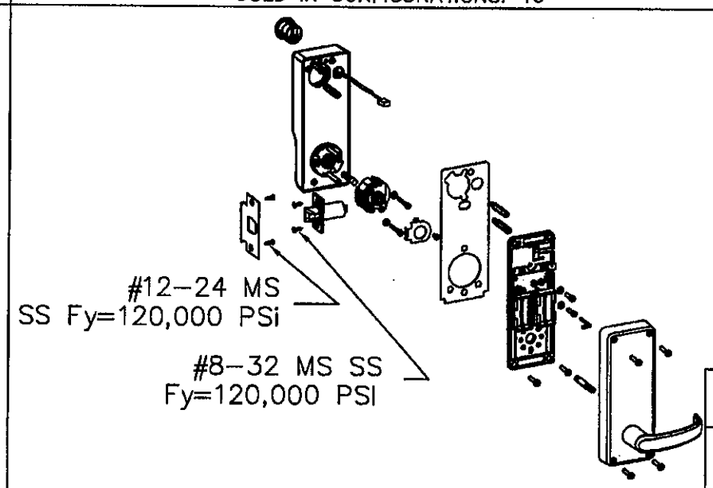

CYLINDRICAL LEVER LOCKSET LOCKNETICS/SCHLAGE 5100 SERIES
(MIN. 1/2" THROW LATCH). USED IN CONFIGURATIONS: 11

REVISIONS

LTR	DESCRIPTION			DATE	APPROVED
A	APPROVAL	DWG	YMF	05/20/07	
B	REVISED	DWG	RAP	11/26/07	
C	REVISED	DWG	RAP	12/14/07	
D	REVISED	DWG	YMF	12/14/08	
E	REVISED	PER_MDBCCO	YMF	02/05/09	
F	REVISED	DWG	YMF	12/18/09	
G	REVISED	PER_MDBCCO	YMF	04/08/10	

Gordon Thomas, P.E. 4/14/10 Date
3759 Blossom Court
Mason, OH 45040
Florida # 46716

NOTE:

ELECTRICAL FUNCTIONS/INSTALLATION IS NOT PART OF THIS APPROVAL AND TO BE REVIEWED AND APPROVED BY BUILDING OFFICIAL.

PRODUCT REVISED
as complying with the Florida Building Code
Acceptance No 12-0305.15
Expiration Date 5/5/15
By Ishaq I. Chunara
Miami Dade Product Control

PRODUCT RENEWED
as complying with the Florida Building Code
Acceptance No 10-0209.08
Expiration Date MAY 5, 2015
By Ishaq I. Chunara
Miami Dade Product Control Division

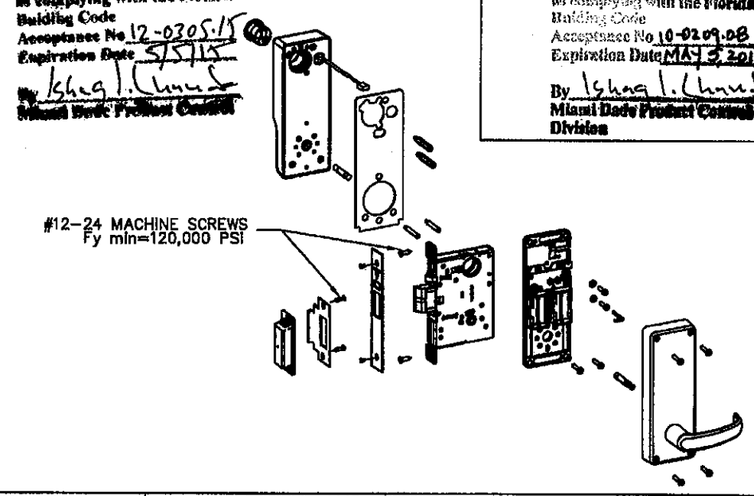

LOCKNETICS / SCHLAGE 5500 AND SERIES MORTISE LOCKSET W/ AUTOBOLT
(MIN. THROW - 3/4"). USED IN CONFIGURATIONS: 10

BEND RADIUS

THIRD ANGLE PROJECTION

DRAWN	YMF	DATE 05/20/07
CHECKED		
APPROVED		
ENG. APPVL	JPD	11/15/07

Ingersoll Rand
Security Technologies

TITLE MIAMI-DADE PRODUCT APPROVAL
IR EXIT HARDWARE FOR GLASS DOUBLE DOORS.

SIZE	FLAT	DWG NO.	REV
		IRGD07	G

SCALE: NTS | AUTOCAD | SHEET 11 OF 14

REVISIONS			
LTR	DESCRIPTION	DATE	APPROVED
F	ADDED	12/18/09	
G	REVISED_PER_MDBCCO	04/08/10	

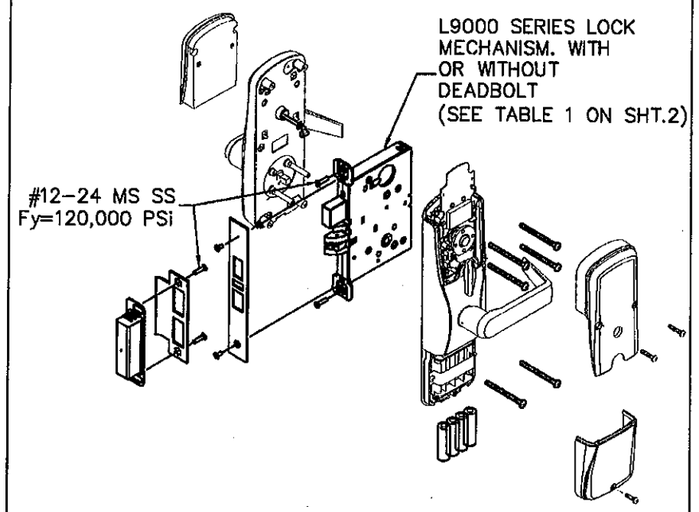

SCHLAGE CO/AD MS SERIES MORTISE LOCKSET
USED IN CONFIGURATIONS: 10 (SEE SHT. 1)

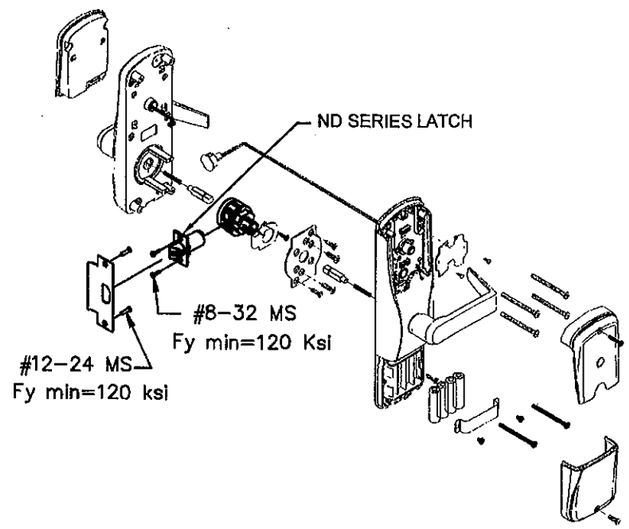

SCHLAGE CO/AD CY SERIES CYLINDRICAL LOCKSET
USED IN CONFIGURATIONS: 11 (SEE SHT.1)

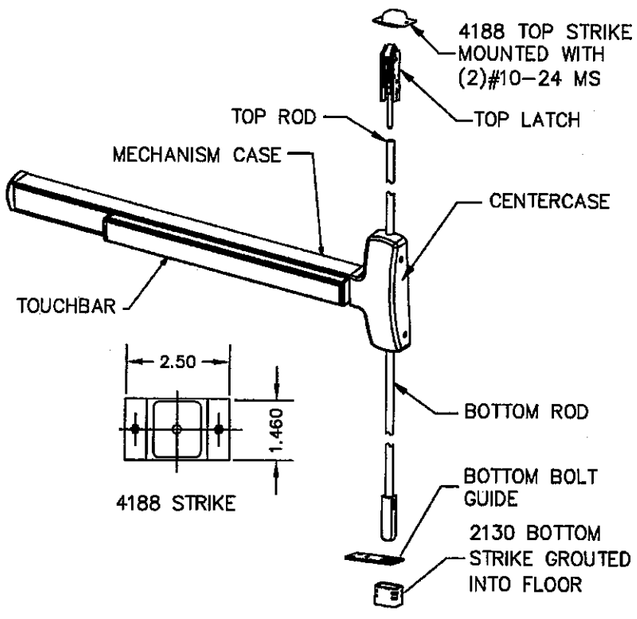

CONCEALED VERTICAL ROD EXIT DEVICE FALCON F-25-C
USED IN **DOOR CONFIGURATION 5** (SEE SHT.1)

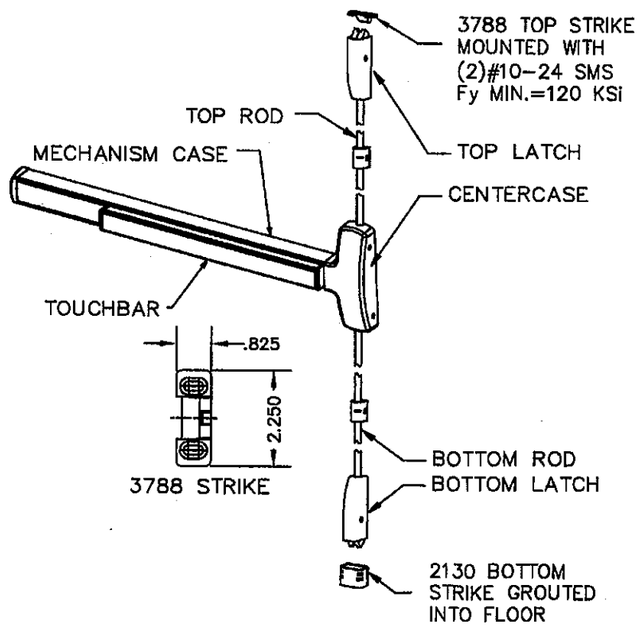

SURFACE VERTICAL ROD EXIT DEVICE FALCON (F)25-V
USED IN **DOOR CONFIGURATION 4** (SEE SHT.1)

PRODUCT REVISED
in complying with the Florida
Building Code
Acceptance No 12-0305.15
Expiration Date 5/5/17
By Ishaq I. Chanda
Miami Dade Product Control

PRODUCT RENEWED
as complying with the Florida
Building Code
Acceptance No 10-0209.08
Expiration Date MAY 5, 2015
By Ishaq I. Chanda
Miami Dade Product Control
Division

4/14/10
Gordon Thomas, P.E. Date
3759 Blossom Court
Mason, OH 45040
Florida # 48718

EXIT HARDWARE OPTIONS:
F-25-C & (F)25-V SERIES - FUNCTIONS AE,
DM, LM, LK, KOR, ED, EL, EA, FSA, FSE, HWEA
TRIMS: ALL APPLICABLE TRIMS AVAILABLE.

NOTE: ELECTRICAL FUNCTIONS/INSTALLATION IS NOT PART
OF THIS APPROVAL AND TO BE REVIEWED AND APPROVED BY BUILDING OFFICIAL.

BEND RADIUS	Ingersoll Rand Security Technologies	
THIRD ANGLE PROJECTION	TITLE MIAMI-DADE PRODUCT APPROVAL	
DRAWN YMF	DATE 05/20/07	IR EXIT HARDWARE FOR GLASS DOUBLE DOORS.
CHECKED		
APPROVED		SIZE FLAT / DWG NO. IRGD07 / REV G
ENG. APPVL JPD	11/15/07	SCALE: NTS / AUTOCAD / SHEET 12 OF 14

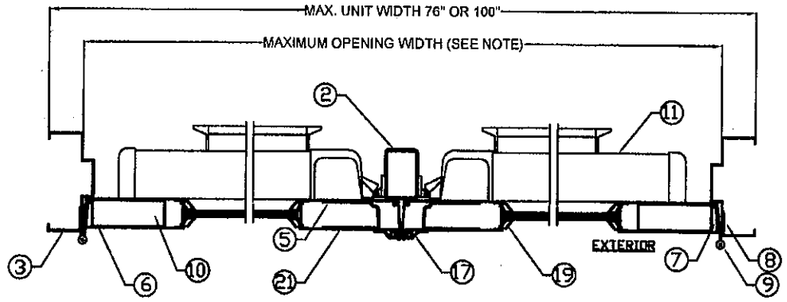

RIM EXIT DEVICE WITH HARDWARE MULLION
SECTION A-A
CONFIGURATIONS 1, 2, 3A, 3B
(SEE SHT.1)

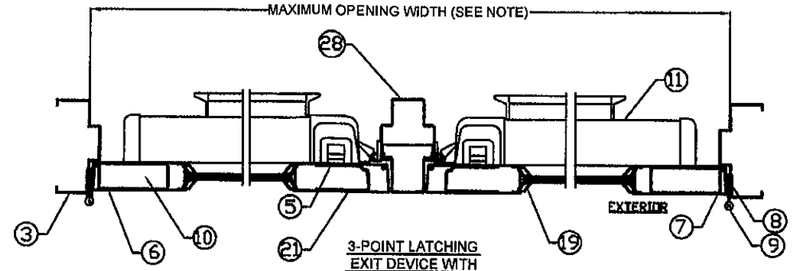

3-POINT LATCHING
EXIT DEVICE WITH
FIXED HOLLOW METAL MULLION
SECTION A-A
CONFIGURATIONS 7 & 9
(SEE SHT.1)

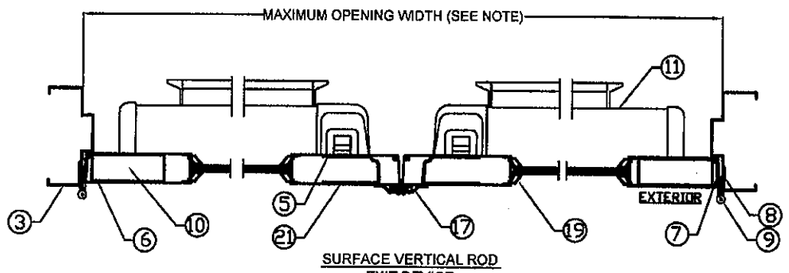

SURFACE VERTICAL ROD
EXIT DEVICE.
SECTION A-A
CONFIGURATION 4
(SEE SHT.1)

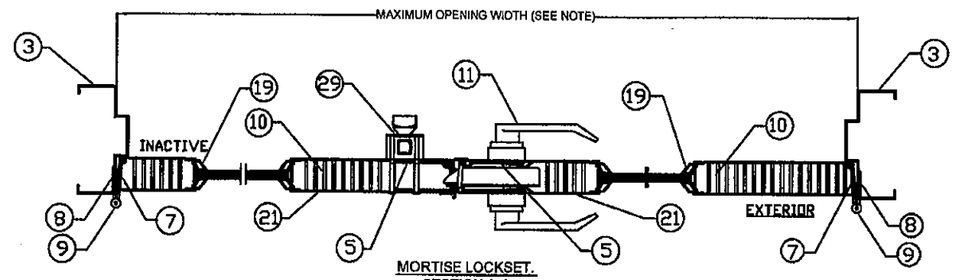

MORTISE LOCKSET.
SECTION A-A
CONFIGURATION 10
(SEE SHT.1)

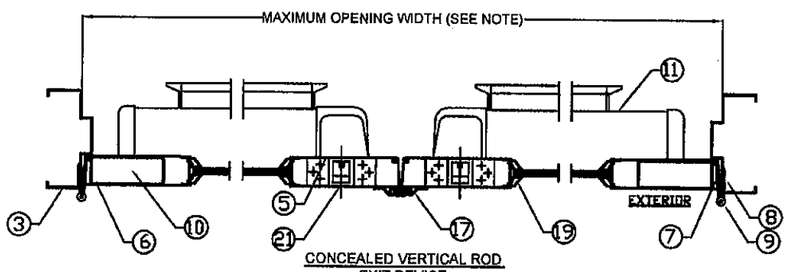

CONCEALED VERTICAL ROD
EXIT DEVICE.
SECTION A-A
CONFIGURATION 5
(SEE SHT.1)

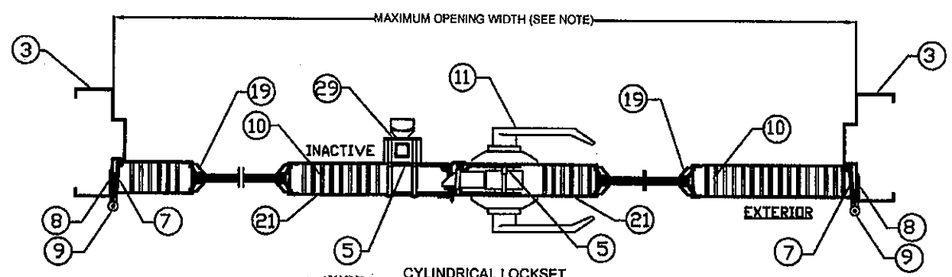

CYLINDRICAL LOCKSET.
SECTION A-A
CONFIGURATION 11
(SEE SHT.1)

SEE SHEET 4
FOR ANCHOR
INSTALLATION
DETAILS

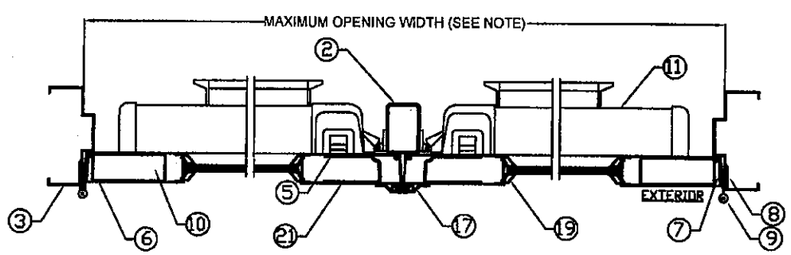

3-POINT LATCHING
EXIT DEVICE WITH
HARDWARE MULLION
SECTION A-A
CONFIGURATIONS 6 & 8
(SEE SHT.1)

REVISIONS				
LTR	DESCRIPTION		DATE	APPROVED
A	APPROVAL DWG	YMF	05/20/07	
B	REVISED DWG	RAP	11/26/07	
C	REVISED DWG	RAP	12/14/07	
D	REVISED DWG	YMF	12/14/08	
E	REVISED PER_MDBCCD	YMF	02/05/09	
F	REVISED NEW_NUMBER	YMF	01/04/10	
G	REVISED PER_MDBCCD	YMF	04/08/10	

4/14/10
Gordon Thomas, P.E. Date
3759 Blossom Court
Mason, OH 45040
Florida # 46718

NOTES;
1. FOR MAXIMUM OPENING SIZE SEE SHT 3 OF 14.
2. GLAZING DETAIL 'K' (GLAZING TYPE 2) SHOWN,
SEE TABLE 8, SHEET 8 OF 14 FOR ADDITIONAL OPTIONS.

PRODUCT REVIEWED
as complying with the Florida
Building Code
Acceptance No 12-0305.15
Expiration Date 5/15/15
By
Miami Dade Product Control

PRODUCT RENEWED
as complying with the Florida
Building Code
Acceptance No 10-0209.08
Expiration Date MAY 5, 2015
By
Miami Dade Product Control
Division

BEND RADIUS

THIRD ANGLE PROJECTION

DRAWN	YMF	DATE 05/20/07
CHECKED		
APPROVED		
ENG. APPVL	JPD	11/15/07

Ingersoll Rand
Security Technologies

TITLE MIAMI-DADE PRODUCT APPROVAL

HORIZONTAL CROSS SECTIONS FOR GLASS DOUBLE DOORS.

SIZE	FLAT	DWG NO.	REV
		IRGD07	G
SCALE: NTS	AUTOCAD		SHEET 13 OF 14

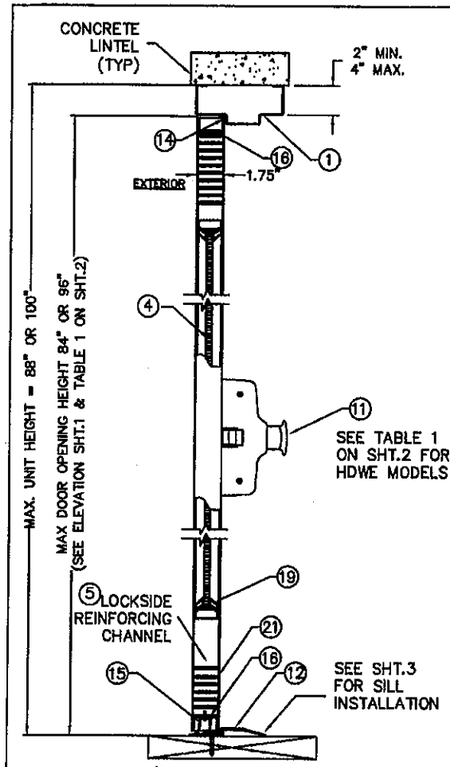

RIM EXIT DEVICE.
SECTION B-B
CONFIGURATIONS 1, 2, 3A, 3B
(SEE SHT.1)

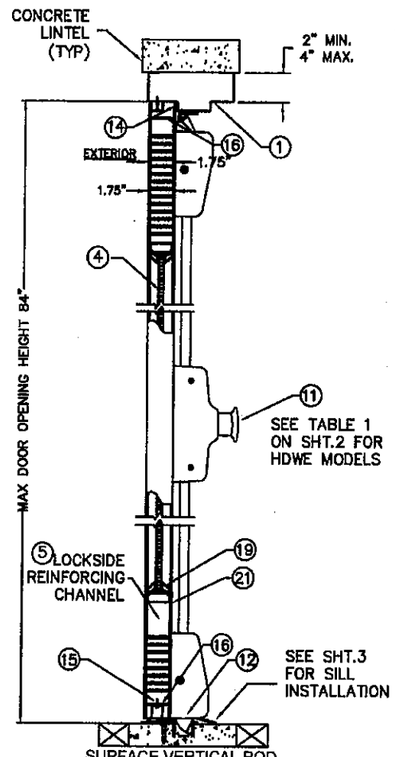

SURFACE VERTICAL ROD
EXIT DEVICE.
SECTION B-B
CONFIGURATION 4 (SEE SHT.1)

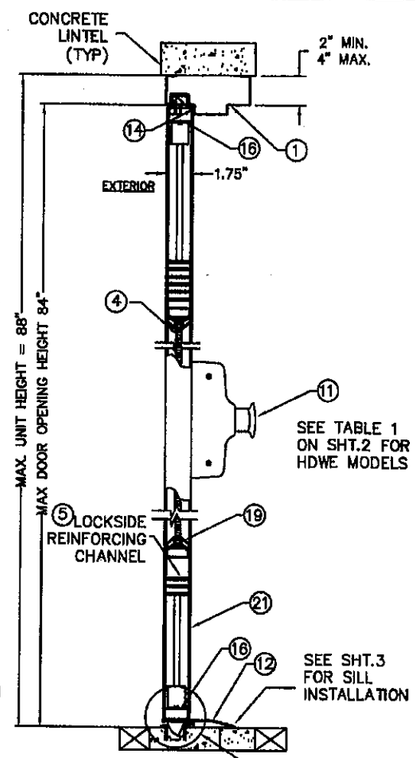

CONCEALED VERTICAL ROD
EXIT DEVICE.
SECTION B-B
CONFIGURATION 5 (SEE SHT.1)

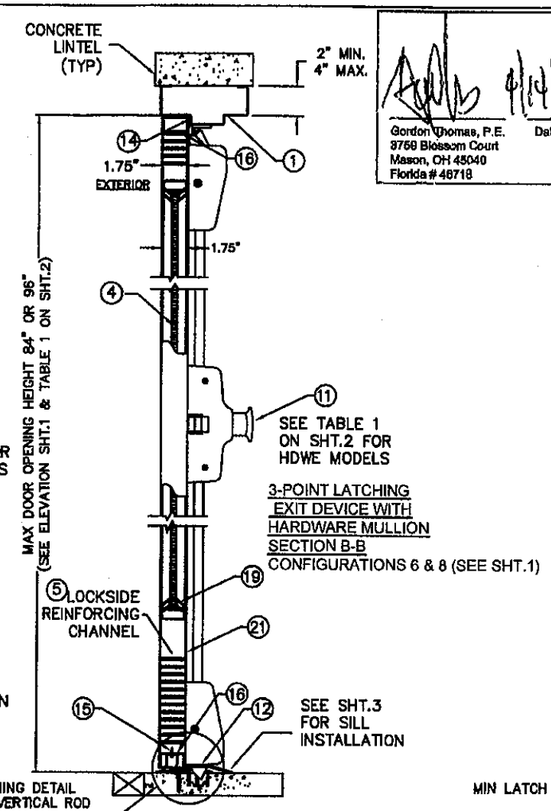

3-POINT LATCHING
EXIT DEVICE WITH
HARDWARE MULLION
SECTION B-B
CONFIGURATIONS 6 & 8 (SEE SHT.1)

Gordon Thomas, P.E.
3759 Blossom Court
Mason, OH 45040
Florida # 46718
Date 9/24/10

REVISIONS					
LTR	DESCRIPTION			DATE	APPROVED
A	APPROVAL	DWG	YMF	05/20/07	
B	REVISED	DWG	RAP	11/26/07	
C	REVISED	DWG	RAP	12/14/07	
D	REVISED	DWG	YMF	12/14/08	
E	REVISED	PER_MDBCCO	YMF	02/05/09	
F	REVISED	NEW_NUMBER	YMF	01/04/10	
G	REVISED	NEW_NUMBER	YMF	04/08/10	

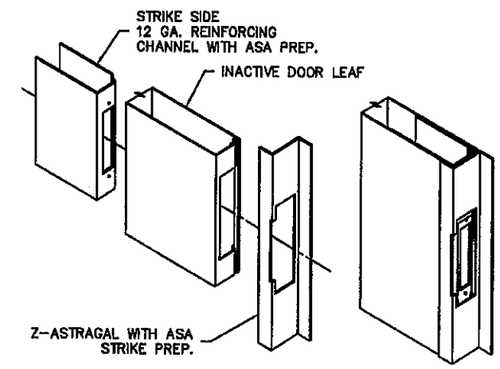

INACTIVE LEAF
ASA STRIKE PREP
AND ASSEMBLY DETAIL

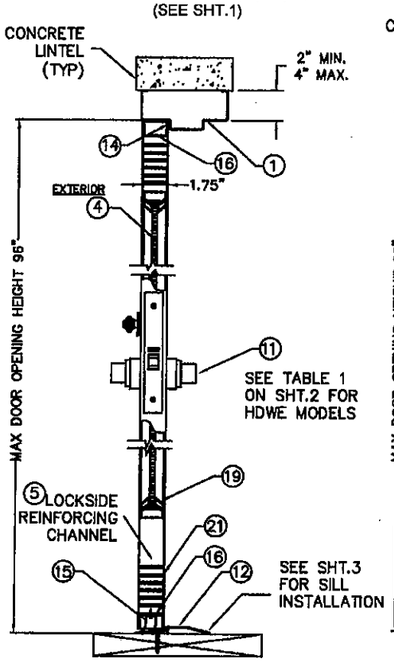

MORTISE LOCKSET.
SECTION B-B
CONFIGURATION 10
(SEE SHT.1)

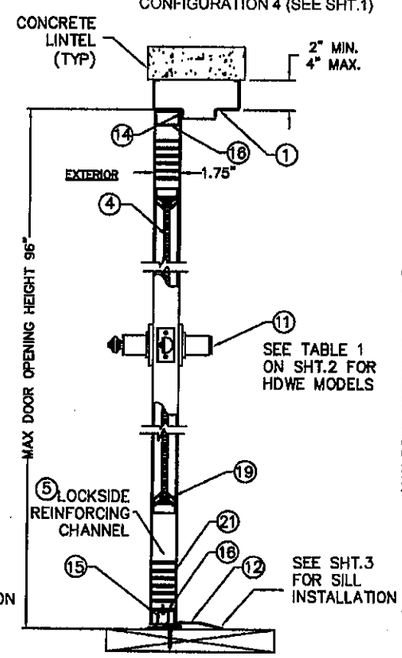

CYLINDRICAL LOCKSET.
SECTION B-B
CONFIGURATION 11
(SEE SHT.1)

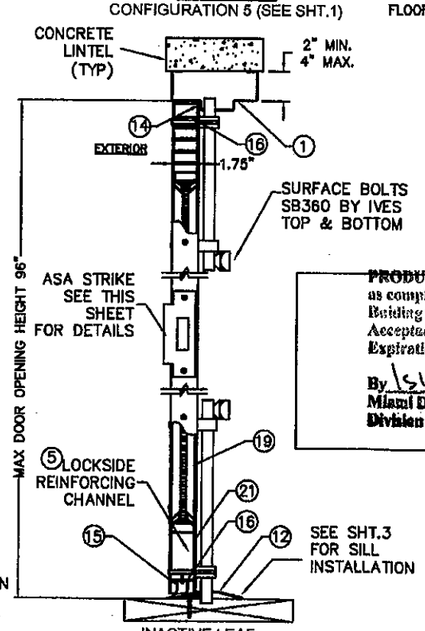

INACTIVE LEAF
SECTION C-C
CONFIGURATIONS 10 & 11
(SEE SHT.1)

PRODUCT REVISED
as complying with the Florida
Building Code
Acceptance No. 12-0305.15
Expiration Date MAY 05 2015
By Ishaq I. Chanda
Miami Dade Product Control Division

PRODUCT RENEWED
as complying with the Florida
Building Code
Acceptance No. 10-0209.08
Expiration Date MAY 5 2015
By Ishaq I. Chanda
Miami Dade Product Control Division

MIN LATCH THROW: TOP=3/4"
BOTTOM=1/2"

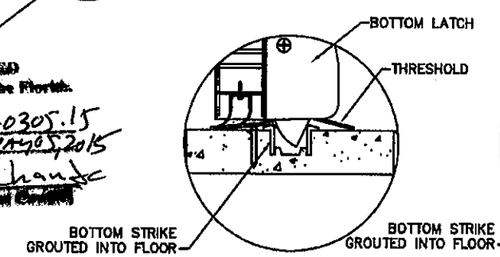

FLOOR LATCHING DETAIL
SURFACE VERTICAL ROD
EXIT DEVICE

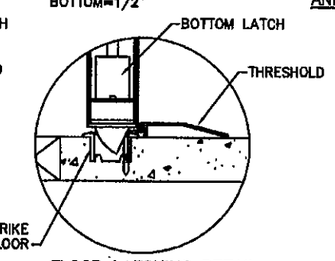

FLOOR LATCHING DETAIL
CONCEALED VERTICAL ROD
EXIT DEVICE

NOTES:
1. FOR MAX. DOOR AND UNIT OPENING SIZES SEE ELEVATION SHEET 1 AND TABLE 1 ON SHT. 2 OF 14.
2. GLAZING DETAILS SHOWN ON SHT.8 OF 14. SEE TABLE 8 ON SHT. 8 OF 14 FOR GLAZING OPTIONS, AND SHT.2 FOR MAX DLO LIMITS.
3. SEE SHEET 4 FOR ANCHORS INSTALLATION DETAILS.

BEND RADIUS

THIRD ANGLE PROJECTION

DRAWN YMF	DATE 05/20/07	Ingersoll Rand Security Technologies
CHECKED		TITLE MIAMI-DADE PRODUCT APPROVAL
APPROVED		VERTICAL CROSS SECTIONS FOR GLASS DOUBLE DOORS.
ENG. APPVL JPD	11/15/07	SIZE FLAT · DWG NO. IRGD07 · REV G
		SCALE: NTS · AUTOCAD · SHEET 14 OF 14