MIAMI-DADE COUNTY
DEPARTMENT OF PERMITTING, ENVIRONMENT, AND REGULATORY AFFAIRS (PERA)
BOARD AND CODE ADMINISTRATION DIVISION

NOTICE OF ACCEPTANCE (NOA)

MIAMI-DADE COUNTY
PRODUCT CONTROL SECTION
11805 SW 26 Street, Room 208
Miami, Florida 33175-2474
T (786) 315-2590 F (786) 315-2599
www.miamidade.gov/pera/

Ingersoll-Rand
6810 Hillsdale Court
Indianapolis, IN 46250

SCOPE:

This NOA is being issued under the applicable rules and regulations governing the use of construction materials. The documentation submitted has been reviewed and accepted by Miami-Dade County PERA -Product Control Section to be used in Miami Dade County and other areas where allowed by the Authority Having Jurisdiction (AHJ).

This NOA shall not be valid after the expiration date stated below. The Miami-Dade County Product Control Section (In Miami Dade County) and/or the AHJ (in areas other than Miami Dade County) reserve the right to have this product or material tested for quality assurance purposes. If this product or material fails to perform in the accepted manner, the manufacturer will incur the expense of such testing and the AHJ may immediately revoke, modify, or suspend the use of such product or material within their jurisdiction. PERA reserves the right to revoke this acceptance, if it is determined by Miami-Dade County Product Control Section that this product or material fails to meet the requirements of the applicable building code.

This product is approved as described herein, and has been designed to comply with the Florida Building Code, including the High Velocity Hurricane Zone.

DESCRIPTIO: IR / Steelcraft Single glazed Outswing Commercial Steel Doors w / wo Panic Exit Devices

APPROVAL DOCUMENT: Drawing No "**IRGS07**" Rev **H**, titled "IR Glass Outswing Doors", sheets 1 through 13 of 13, prepared by the manufacturer, dated 05-27-07 and last revised on 04/14/10, signed and sealed by Thomas Gordon, P. E. bearing the Miami-Dade County Product Control Revision stamp with the Notice of Acceptance number and expiration date by the Miami-Dade County Product Control section.

MISSILE IMPACT RATING: Large Missile Impact Resistant

Limitations:

1. See Design Pressures, Sizes, Hardware, DLO and Water infiltration limitations in sheet 1& 2 of the drawings.
2. Min .090" thick DuPont's SGP interlayer is required in Superlite II XL glazing detail per test, sheet 8.
2. Option (A) Polystyrene and Expanded polystyrene foam core options (F) in sheet 4 are limited to Atlas EPS (min ρ =1#/ft^3) and Polyisocyanurate El-Foam–H200 (polyurethane, min ρ =2#/ft^3) by Elliott Company.
3. Electrical/Electronic function is not part of this approval, such functions to be reviewed and approved by AHJ.

LABELING: Each unit shall bear a permanent label with the manufacturer's name or logo, Cincinnati, Ohio and series and following statement: "Miami-Dade County Product Control Approved", noted herein.

RENEWAL of this NOA shall be considered after a renewal application has been filed and there has been no change in the applicable building code negatively affecting the performance of this product.

TERMINATION of this NOA will occur after the expiration date or if there has been a revision or change in the materials, use, and/or manufacture of the product or process. Misuse of this NOA as an endorsement of any product, for sales, advertising or any other purposes shall automatically terminate this NOA. Failure to comply with any section of this NOA shall be cause for termination and removal of NOA.

ADVERTISEMENT: The NOA number preceded by the words Miami-Dade County, Florida, and followed by the expiration date may be displayed in advertising literature. If any portion of the NOA is displayed, then it shall be done in its entirety.

INSPECTION: A copy of this entire NOA shall be provided to the user by the manufacturer or its distributors and shall be available for inspection at the job site at the request of the Building Official.

This NOA **revises NOA # 10-0209.09** and consists of this page 1 and evidence pages E-1, as well as approval document mentioned above.

The submitted documentation was reviewed by **Ishaq I. Chanda, P.E.**

5/24/12

MIAMI-DADE COUNTY APPROVED

NOA No 12-0305.16
Expiration Date: May 05, 2015
Approval Date: May 31, 2012

Ingersoll-Rand

NOTICE OF ACCEPTANCE: EVIDENCE SUBMITTED

A. DRAWINGS

1. Manufacturer's parts and sections drawings (submitted under file # **10-0209.09**)
2. Drawing No "**IRGS07**" Rev **H**, titled "IR Glass Outswing Doors", sheets 1 through 13 of 13, prepared by the manufacturer, dated 05-27-07 and last revised on 04/14/10, signed and sealed by Thomas Gordon, P.E.

B. TESTS (Submitted file # **10-0209.09**)

1. Test report on
    1) Uniform Static Air Pressure Test, Loading per TAS 202-94
    2) Large Missile Impact Test per FBC, TAS 201-94
    3) Cyclic Wind Pressure Loading per FBC, TAS 203-94
    4) Forced Entry Test, per PA 202-94

Along with manufacturer's parts and section drawings of double flush outswing steel doors, marked by National Certified Testing Lab, Test Reports No. **NCTL-210- 3580-2,** dated March 25, 2009, signed and sealed by Gerry Ferrara, P. E.

2. Test report on (transferred from file # **07-0829.06**)
    1) Air Infiltration Test, per TAS 202-94
    2) Uniform Static Air Pressure Test, Loading per TAS 202-94
    3) Large Missile Impact Test per FBC, TAS 201-94
    4) Cyclic Wind Pressure Loading per FBC, TAS 203-94
    5) Forced Entry Test, per PA 202-94

Along with manufacturer's parts and section drawings of double glazed outswing steel doors, marked by Certified Testing Lab, Test Reports No(s). **CTLA-776W** dated February 20, 2002, **CTLA-975W** dated Jan 23, 2003, **CTLA-882W** dated Aug 29, 2002, **CTLA-1035W** dated May 28, 2003 and , **CTLA-1086-W** dated Nov. 17, 2003 and **CTLA-1107W-3** dated June 30, 2004, all signed and sealed by Ramesh Patel, P.E.

Note: Test report CTLA-1035W has been revised by an addendum letter dated Feb 20, 2009, signed and sealed by Ramesh Patel, P.E.

Also the manufacturer's parts and section drawings of glazed outswing double steel doors, marked by Certified Testing Lab, Test Reports No(s). **NCTL-210-3232-1** dated 02/24/06 and **NCTL-210-3357-1** dated Dec 28, 2006, signed and sealed by Gerard J. Ferrara, P.E.

3. Additional test reports
    1) Uniform Static Air Pressure Test, Loading per FBC TAS 202-94.
    2) Water Resistance Test per FBC TAS 202-94

Along with marked-up drawings and installation diagram of double steel commercial doors, prepared by National Certified Testing Laboratories Inc., Test Report No. **NCTL- 210-03-0514-11,** dated August 31, 2004 , **NCTL 210- 03-3511-1** dated 04/09/08 and **NCTL 210- 03-3549-1** dated 08/26/08, all signed and sealed by Gerry Ferrara, P. E.

3. Reference test report No.CTLA-1107W for strap anchor qualification.

C. CALCULATIONS: (Submitted file # **10-0209.09**)

1. Statement of compliance & anchor verification evaluation report dated 12/18/2007 and last revised on 06/18/2008, prepared, signed & sealed by Thomas Gordon., P.E.
2. Evaluation report for Hinges dated 09/01/04, prepared, signed & sealed by Thomas Gordon., P.E.

Ishaq I. Chanda

Ishaq I. Chanda, P.E.
Product Control Examiner
NOA No 12-0305.16
Expiration Date: May 05, 2015
Approval Date: May 31, 2012

NOTICE OF ACCEPTANCE: EVIDENCE SUBMITTED

D. QUALITY ASSURANCE BY

1. Miami Dade Department of Permitting, Environment, and Regulatory Affairs (PERA).

E. MATERIAL CERTIFICATIONS (submitted under file # **10-0209.09**)

1. Notice of Acceptance No. **08-0305.02** issued to Sabic innovative Plastic (Former G.E. Plastic) for "Lexan sheet", expiring on 07/17/2013.
2. Notice of Acceptance No. **11-0624.02** issued to E.I. DuPont DeNemours, for SentryGlas Interlayer", expiring on 01/14/2017.
3. Test Report No. **03NK2370/R145081**, January 21, 2003, issued by Underwriters laboratories Inc for "Surface Burning Characteristics of Building material" per ASTME84-00a and self Ignition per ASTM1929D for "Elfoam H200", issued to Elliott Co. of Indianapolis Inc.
4. Tensile test report # CTLA-776W (0194H), dtd 02/25/02 prepared by CTL, Architectural Division, sheet samples, tested per ASTM E8, signed & sealed by Ramesh Patel, P.E.
5. Tensile Test report No. A103W1-Test 1, 2 & 3 dated 23 APR 03 per ASTME-8 for steel face sheet, prepared by Certified Testing laboratory, signed and sealed by Ramesh Patel, P.E.
6. Test Report No. **3094867SAT-001**, April 13, 2006, issued by Intertek for "Surface Burning Characteristics of Building material" per ASTME84 and self Ignition per ASTM1929D for "EPS", issued to Falcon Foam, a Div of Atlas Roofing, re-named as "ATLAS EPS'.
7. Test Report No. **16206-122543 (1015P200(3))**, dated November 29, 2004 for " Surface Burning Characteristics of Building material" per ASTME84 and self Ignition per ASTM1929D for "Polyisocyanurate" issued by Omega Point Laboratories, Inc. to Elliot Company, Indianapolis, Indiana.

F. STATEMENTS

1. Letter of conformance to FBC 2010 "No financial interest" dated 02/15/12, signed and sealed by Gordon Thomas, P.E.
2. Statement letter of conformance to FBC 2007 and no financial interest, dated June 08, 2008, prepared, signed and sealed by Gordon Thomas, P.E.
3. Laboratory Compliance statement issued as part of test report.
4. Addendum letters dated Feb 20, 2009 for test reports Test report CTLA-1035W, issued by Certified Testing lab, signed and sealed by Ramesh Patel, P.E.
5. Letter of certification dated 04/20/10, issued by Ingersoll-Rand for electronic CO lock series mechanical /functional parts same as AD, ND and AD-M series.

G. OTHER

1. This NOA **revises NOA # 10-0209.09,** expiring on 05/05/15.
2. Previously consolidates NOA #(s) associated with this files are # **10-0209.09, 07-0829.06, 04-0303.03, 05- 0103.01, 05-0325.02, 08-0508.07** and **08-0715.03**
3. Consolidation Test proposal # **06-2468,** dated 04/27/07 approved by BCCO.
4. IR Locks & Panic devices brochures / catalogs supplied by manufacturer.

Ishaq I. Chanda

Ishaq I. Chanda, P.E.
Product Control Examiner
NOA No 12-0305.16
Expiration Date: May 05, 2015
Approval Date: May 31, 2012

MORTISE LOCKSET WITH OR WITHOUT DEADBOLT

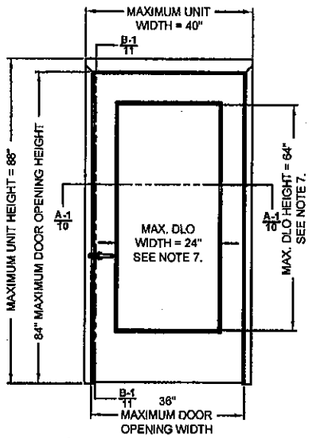

1	DESIGN PRESSURE RATING, PSF	
	WHERE WATER INFILTRATION REQUIREMENT IS NEEDED	WHERE WATER INFILTRATION REQUIREMENT IS NOT NEEDED
	±75	±75

CYLINDRICAL LOCKSET 1/2" MIN. THROW LATCH

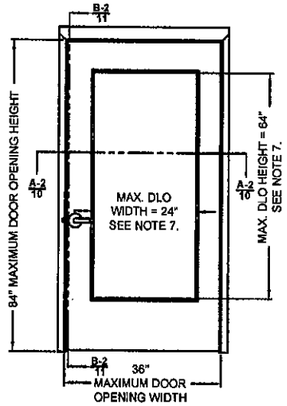

2	DESIGN PRESSURE RATING, PSF	
	WHERE WATER INFILTRATION REQUIREMENT IS NEEDED	WHERE WATER INFILTRATION REQUIREMENT IS NOT NEEDED
	±75	±75

SURFACE VERTICAL ROD EXIT DEVICE

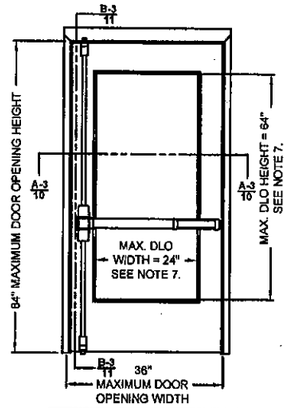

3	DESIGN PRESSURE RATING, PSF	
	WHERE WATER INFILTRATION REQUIREMENT IS NEEDED	WHERE WATER INFILTRATION REQUIREMENT IS NOT NEEDED
	±60	±60

CONCEALED VERTICAL ROD EXIT DEVICE

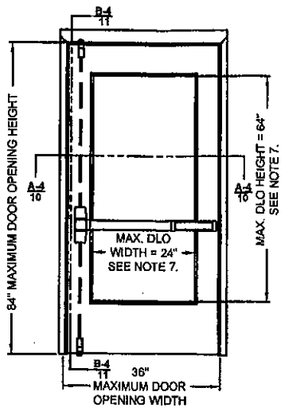

4	DESIGN PRESSURE RATING, PSF	
	WHERE WATER INFILTRATION REQUIREMENT IS NEEDED	WHERE WATER INFILTRATION REQUIREMENT IS NOT NEEDED
	±60	±60

THREE-POINT LATCHING EXIT DEVICE

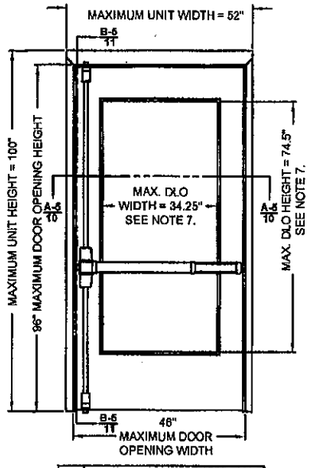

5	DESIGN PRESSURE RATING, PSF	
	WHERE WATER INFILTRATION REQUIREMENT IS NEEDED	WHERE WATER INFILTRATION REQUIREMENT IS NOT NEEDED
	±50	±50

THREE-POINT LATCHING EXIT DEVICE

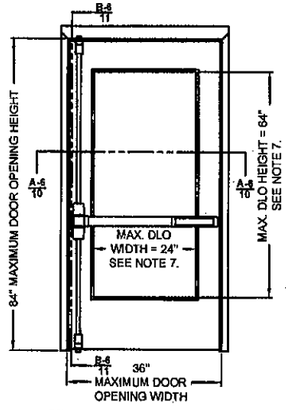

6	DESIGN PRESSURE RATING, PSF	
	WHERE WATER INFILTRATION REQUIREMENT IS NEEDED	WHERE WATER INFILTRATION REQUIREMENT IS NOT NEEDED
	±60	±60

REVISIONS				
LTR	DESCRIPTION		DATE	APPROVED
A	APPROVAL DWG	YMF	05/20/07	
B	REVISED DWG	RAP	11/26/07	
C	REVISED DWG	RAP	12/12/07	
D	REVISED DWG	YMF	07/29/08	
E	REVISED PER_MDBCCD	YMF	01/30/09	
F	REVISED PER_MDBCCD	YMF	02/04/09	
G	REVISED DWG	YMF	01/04/10	
H	REVISED DWG	YMF	04/09/10	

4/14/10

Gordon Thomas, P.E. Date
3759 Blossom Court
Mason, OH 45040
Florida # 46718

RIM EXIT DEVICE

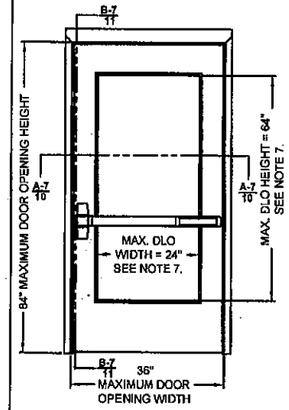

7	DESIGN PRESSURE RATING, PSF	
	WHERE WATER INFILTRATION REQUIREMENT IS NEEDED	WHERE WATER INFILTRATION REQUIREMENT IS NOT NEEDED
	±60	±60

RIM EXIT DEVICE

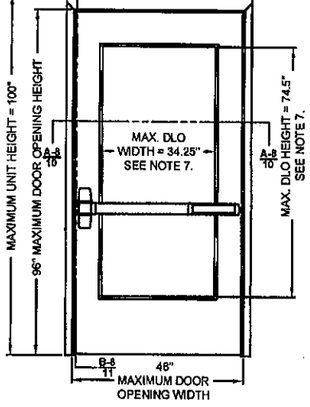

8	DESIGN PRESSURE RATING, PSF	
	WHERE WATER INFILTRATION REQUIREMENT IS NEEDED	WHERE WATER INFILTRATION REQUIREMENT IS NOT NEEDED
	±50	±50

RIM EXIT DEVICE

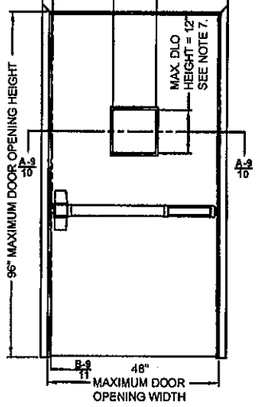

9	DESIGN PRESSURE RATING, PSF	
	WHERE WATER INFILTRATION REQUIREMENT IS NEEDED	WHERE WATER INFILTRATION REQUIREMENT IS NOT NEEDED
	±75	±100

RIM EXIT DEVICE

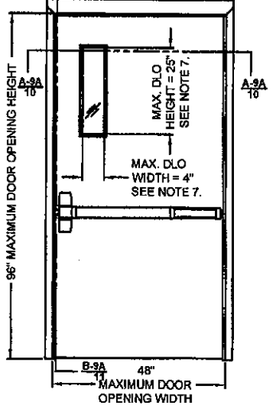

9A	DESIGN PRESSURE RATING, PSF	
	WHERE WATER INFILTRATION REQUIREMENT IS NEEDED	WHERE WATER INFILTRATION REQUIREMENT IS NOT NEEDED
	±75	±100

EXIT ALARM LOCK

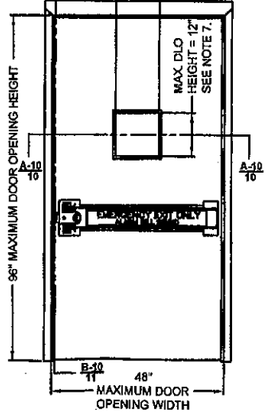

10	DESIGN PRESSURE RATING, PSF	
	WHERE WATER INFILTRATION REQUIREMENT IS NEEDED	WHERE WATER INFILTRATION REQUIREMENT IS NOT NEEDED
	±55	±55

EXIT ALARM LOCK

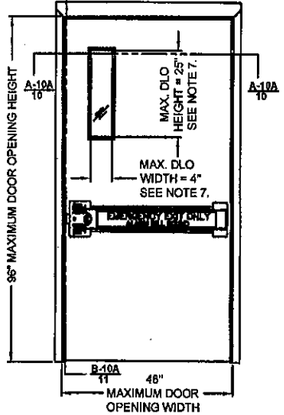

10A	DESIGN PRESSURE RATING, PSF	
	WHERE WATER INFILTRATION REQUIREMENT IS NEEDED	WHERE WATER INFILTRATION REQUIREMENT IS NOT NEEDED
	±55	±55

MORTISE LOCKSET WITH OR WITHOUT DEADBOLT

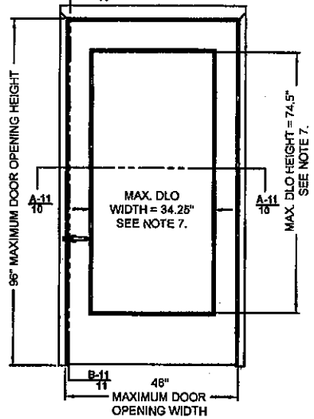

11	DESIGN PRESSURE RATING, PSF	
	WHERE WATER INFILTRATION REQUIREMENT IS NEEDED	WHERE WATER INFILTRATION REQUIREMENT IS NOT NEEDED
	±50	±50

CYLINDRICAL LOCKSET 1/2" MIN. THROW LATCH

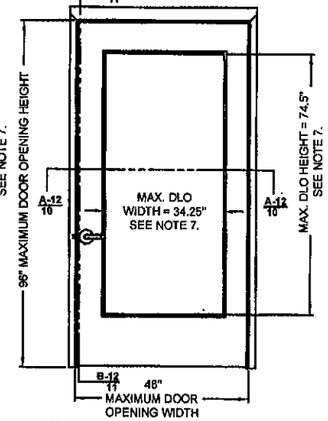

12	DESIGN PRESSURE RATING, PSF	
	WHERE WATER INFILTRATION REQUIREMENT IS NEEDED	WHERE WATER INFILTRATION REQUIREMENT IS NOT NEEDED
	±50	±50

NOTES:
1. INTERIOR VIEWS ARE SHOWN FOR ALL ELEVATIONS
2. SEE TABLE 1 ON SHEET 2 FOR HARDWARE APPLICATIONS AND LIMITATIONS
3. SEE SHEET 3 FOR HINGE REQUIREMENTS
4. SEE SHEET 4 FOR ANCHORING TYPES AND LIMITATIONS
5. SEE SHEET 5 FOR WEATHERSTRIPPING INSTALLATION DETAILS AND LIMITATIONS
6. SEE SHEET 8 FOR GLAZING OPTIONS AND DETAILS
7. DLO - DAYLIGHT OPENING SIZE, SAME AS EXPOSED GLASS

PRODUCT REVIEWED
as complying with the Florida Building Code
Acceptance No 12-0305.16
Expiration Date MAY 05 2015
By Ishaq I. Chanda
Miami Dade Product Control Division

PRODUCT RENEWED
as complying with the Florida Building Code
Acceptance No 10-0209.09
Expiration Date MAY 5 2015
By Ishaq I. Chanda
Miami Dade Product Control Division

BEND RADIUS

THIRD ANGLE PROJECTION

DRAWN	YMF	05/20/07
CHECKED		
APPROVED		
ENG. APPVL	JPD	11/15/07

Ingersoll Rand
Security Technologies

TITLE MIAMI-DADE PRODUCT APPROVAL

GLASS OUTSWING DOORS AND HARDWARE CONFIGURATIONS
IR COMMERCIAL DOOR OPENING SINGLE GLASS DOORS.

SIZE	FLAT	DWG NO.	REV
		IRGS07	H

SCALE: NTS | AUTOCAD | SHEET 1 of 13

Door Configuration	Maximum Design Pressure, PSF		Maximum Door Opening Size, in.		Maximum DLO Size, in. (NOTE 3)		Locking Hardware Description				Comments
	Positive	Negative	Width	Height	Width	Height	Hardware Family	Model/Series	Strike Models	IR Brand	
1	75	75	36	84	24	64	Mortise Lock	L/LV9400/AD MS	10-072	Schlage	Function with deadbolt, 3/4" min. throw latch & 1" min. throw bolt
								L/LV9000/AD MS			Function w/o deadbolt, 3/4" min. throw latch
								M	ANSI	Falcon	Function with or w/o deadbolt, 3/4" min. throw latch & 1" min. throw bolt (if applicable)
								5500	ANSI	Schlage/Locknetics	Function with autobolt
2	75	75	36	84	24	64	Cylindrical Lock	D/ND/AD CYL	10-025	Schlage	1/2" min throw latch
								T	ANSI	Falcon	1/2" min throw latch
								5100	ANSI	Schlage/Locknetics	1/2" min throw latch
3	60	60	36	84	24	64	Surface Vertical Rod Exit Device	98/9927(F)	299-F,499-F Top, 304L,248L4 Bottom	Von Duprin	
								(F)18-V	3768 Top, 2130 Bottom	Monarch	
								(F)25-V	3768 Top, 2130 Bottom	Falcon	
4	60	60	36	84	24	64	Concealed Vertical Rod Exit Device	98/9947-F	338 Top, 385A Bottom	Von Duprin	
								33/3547A -F	338 Top, 385A Bottom	Von Duprin	
								F-25-C	4188 Top, 2130 Bottom	Falcon	
								F-18-C	4188 Top, 2130 Bottom	Monarch	
5	50	50	48	96	34.25	74.5	Three-Point Latching Device	98/9957(F)	299-F,499-F Top/Middle, 304L,248L4 Bottom	Von Duprin	
6	60	60	36	84	24	64	Three-Point Latching Device	98/9957(F)	299-F,499-F Top/Middle, 304L,248L4 Bottom	Von Duprin	
7	60	60	36	84	24	64	Rim Exit Device	98/99(F)	299-F,499-F	Von Duprin	
								88-F	268	Von Duprin	
								(F)DL-18-R	F570	Monarch	
8	50	50	48	96	34.25	74.5	Rim Exit Device	98/99(F)	299-F,499-F	Von Duprin	
								88-F	268	Von Duprin	
								(F)DL-18-R	F570	Monarch	
9	75/100 SEE NOTE 2.	75/100 SEE NOTE 2.	48	96	12	12	Rim Exit Device	XP98/99(F)	909/954	Von Duprin	
9A					4	25					
10	55	55	48	96	12	12	Exit Alarm Lock	2670 Guard-X	267	Von Duprin	
10A					4	25					
11	50	50	48	96	34.25	74.5	Mortise Lock	L/LV9400/AD MS	10-072	Schlage	Function with deadbolt, 3/4" min. throw latch & 1" min. throw bolt
								L/LV9000/AD MS			Function w/o deadbolt, 3/4" min. throw latch
								M	ANSI	Falcon	Function with or w/o deadbolt, 3/4" min. throw latch & 1" min. throw bolt (if applicable)
								5500	ANSI	Schlage/Locknetics	Function with autobolt, min 3/4" throw
12	50	50	48	96	34.25	74.5	Cylindrical Lock	D/ND/AD CYL	10-025	Schlage	1/2" min throw latch
								T	ANSI	Falcon	1/2" min throw latch
								5100	ANSI	Schlage/Locknetics	1/2" min throw latch

TABLE 1.

NOTES:
1. SEE SHEETS 9, 10 &, 11 FOR LOCKING HARDWARE.
2. DOOR CONFIGURATIONS 9 AND 9A ARE RATED FOR MAXIMUM DESIGN PRESSURE UP TO +75 PSF WHEN WATER INFILTRATION REQUIREMENT IS NEEDED, AND ±100 PSF WHEN WATER INFILTRATION REQUIREMENT IS NOT NEEDED.
3. DLO - DAYLIGHT OPENING, SAME AS EXPOSED GLASS.

REVISIONS

LTR	DESCRIPTION			DATE	APPROVED
A	APPROVAL	DWG	YMF	05/20/07	
B	REVISED	DWG	RAP	11/26/07	
C	REVISED	DWG	RAP	12/12/07	
D	REVISED	DWG	YMF	07/29/08	
E	REVISED	PER_MDBCCD	YMF	01/30/09	
F	REVISED	PER_MDBCCD	YMF	02/04/09	
G	REVISED	PER_MFR	YMF	05/18/09	
H	REVISED	PER_MFR	YMF	04/09/10	

4/14/10

Gordon Thomas, P.E. Date
3759 Blossom Court
Mason, OH 45040
Florida # 46718

PRODUCT REVISED
as complying with the Florida Building Code
Acceptance No. 12-0305.16
Expiration Date 5/5/15
By Ishaq I. Chanda
Miami Dade Product Control

PRODUCT RENEWED
as complying with the Florida Building Code
Acceptance No. 10-0209.09
Expiration Date MAY 5, 2015
By Ishaq I. Chanda
Miami Dade Product Control Division

BEND RADIUS

THIRD ANGLE PROJECTION

DRAWN	YMF	DATE 05/20/07
CHECKED		
APPROVED		
ENG. APPVL	JPD	11/13/07

Ingersoll Rand
Security Technologies

TITLE MIAMI-DADE PRODUCT APPROVAL

GLASS OUTSWING DOORS AND HARDWARE CONFIGURATIONS
IR COMMERCIAL DOOR OPENING SINGLE GLASS DOORS.

SIZE	FLAT	DWG NO.	REV
		IRGS07	H

SCALE:	NTS	AUTOCAD		SHEET	2 of 13

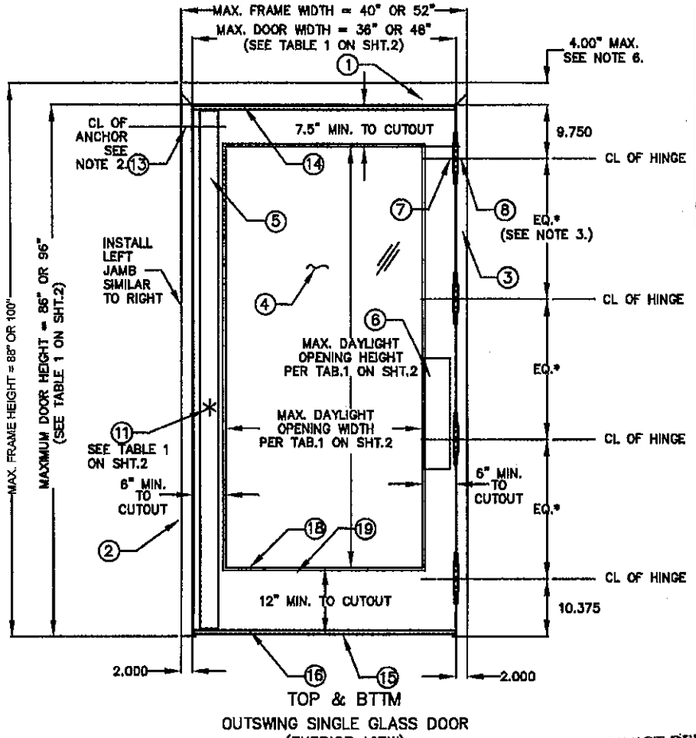

TOP & BTTM
OUTSWING SINGLE GLASS DOOR
(EXERIOR VIEW)

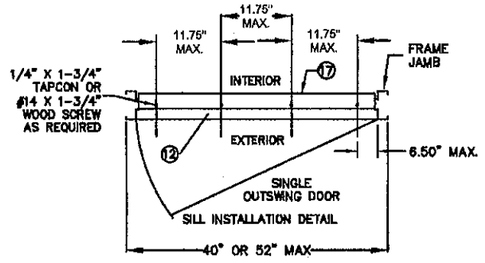

NOTES:

1. ONE ROW OF PS074 WEATHERSTRIPPING PER JAMB AND HEAD. INSTALL PER SHT.5
2. ANCHOR REQUIREMENTS:
   SEE SHEET 4 FOR APPROVED ANCHORS AND INSTALLATION.
3. HINGE REQUIREMENTS: 4.5" STD WT. MIN.
   FOR DOOR OPENING UP TO 90" HIGH - MIN (3) HINGES
   FOR DOOR OPENING OVER 90" - 96" HIGH - MIN (4) HINGES
   STD LOCATIONS: 9.75" FROM RABBET IN HEAD TO CL OF TOP HINGE
   10.38" FROM FLOOR TO CL OF BOTTOM HINGE, EQUALLY SPACED
   IN BETWEEN. HINGE LOCATIONS MAY VARY, MAX SPACING DO NOT EXCEED 35.5"
   APPROVED CONTINUOUS HINGE MODELS: IVES 112 HD, 224HD, 600, 700, MARKAR FM-300, HG-305, STANLEY 661HD, HAGER 780-224HD, 790-900, SELECT SL11HD, ABH A500, A240HD.
4. SEE SHEET 2 & 3 FOR AVAILABLE STANDARD OPENING SIZES AND SPECIFICATIONS.
5. HARDWARE INSTALLATION AS PER MANUFACTURER'S INSTRUCTIONS.
6. 4" FACE IS AVAILABLE FOR FRAMES.
7. APPLY CAULK AS NEEDED.
8. WEATHERSTRIPPING, SEE SHEET #5.
9. SEE SHEET 12 FOR HORIZONTAL CROSS-SECTIONS, SEE SHEET 13 FOR VERTICAL CROSS-SECTIONS.
10. INSTALL REINFORCEMENT CHANNELS AROUND EACH LITE-CUTOUT.
11. ELECTRICAL INSTALLATION IS UNDER SEPARATE APPROVAL AND MUST BE REVIEWED BY CORRESPONDING AUTHORITY.
12. OPTIONAL POWER TRANSFERS, AND/OR "SIGNAL SWITCH" MAY BE USED AS ALLOWED BY CODE AND IT DOES NOT EFFECT THE MECHANICAL PROPERTIES OF EXIT DEVICE AND/OR INHIBIT EGRESS.
13. ITEMS 21 THROUGH 25 REQUIRED ONLY IF WATER INFILTRATION IS NEEDED.
14. SILL SHALL BE ANCHORED PER TOP DOOR VIEW ON THIS SHEET.
15. DAYLIGHT OPENING (DLO) IS THE SAME AS EXPOSED GLASS.

Gordon Thomas, P.E. Date
3759 Blossom Court
Mason, OH 45040
Florida # 46718

DLO – DAY LIGHT OPENING

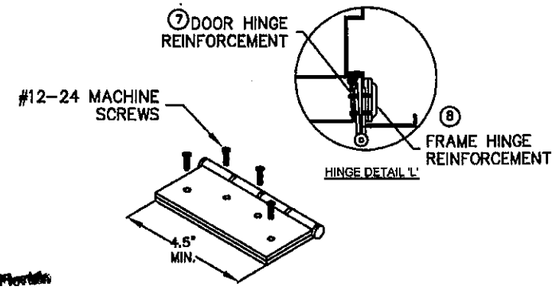

⑨ BUTT HINGE
MIN SIZE 4.5" X 4.5" STD. WT. (.134" MIN.)
IVES 5BB1/3CB1
HAGER 1279
STANLEY F179/1900

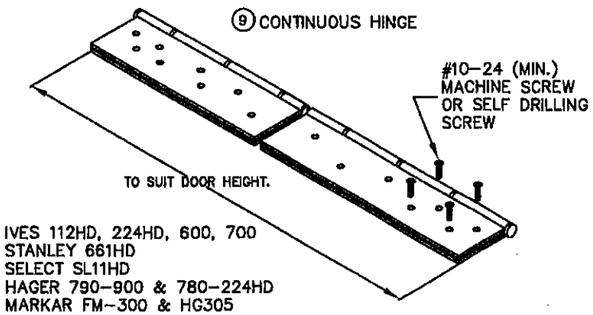

IVES 112HD, 224HD, 600, 700
STANLEY 661HD
SELECT SL11HD
HAGER 790-900 & 780-224HD
MARKAR FM-300 & HG305
ABH A500 & A240HD

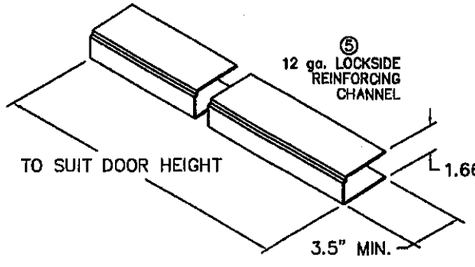

PRODUCT REVISED
as complying with the Florida Building Code
Acceptance No 12-0305.15
Expiration Date 5/15/15
By Ishas I. Thanki
Miami Dade Product Control Division

PRODUCT RENEWED
as complying with the Florida Building Code
Acceptance No 09-0209.09
Expiration Date MAY 5, 2015
By Ishas I. Thanki
Miami Dade Product Control Division

REVISIONS					
LTR	DESCRIPTION			DATE	APPROVED
A	APPROVAL	DWG.	YMF	05/20/07	
B	REVISED	DWG.	RAP	11/26/07	
C	REVISED	DWG.	RAP	12/12/07	
D	REVISED	DWG.	YMF	07/29/08	
E	REVISED	PER_MDBCCO	YMF	01/30/09	
F	REVISED	PER_MDBCCO	YMF	02/04/09	
G	REVISED	DWG	YMF	01/04/10	
H	REVISED	DWG	YMF	04/09/10	

TABLE 2.

ITEM	QUANTITY	DESCRIPTION	MATERIAL	SIZE, MAX.
1	1	HEAD SEE SHT 6 ASTM A366	.053" MIN. STL	MAX. 52" — SEE ELEVATION ON SHT.1
2	1	STRIKE JAMB SEE SHT. 6 ASTM A366	.053" MIN.STL	MAX. 100" — SEE ELEVATION ON SHT.1
3	1	HINGE JAMB SEE SHT 6 ASTM A366	.053" MIN. STL	MAX. 100" — SEE ELEVATION ON SHT.1
4	1	LEXAN 9034 BY GE.	.25" MIN.	35.406" X 75.656" MAX (SEE ELEV)
		LAMINATED GLASS WITH SENTRYGLAS PLUS (DuPont)	.562" MIN.	
		SUPERLITE II-XL BY SAFTI WITH SENTRYGLAS PLUS (DuPont)	1.0" MIN.	
5	1	LOCK SIDE REINFORCEMENT CHANNEL	.093" MIN. STL	3.5 X 93.44 MAX.(SEE ELEV)
6	1	HINGE SIDE PANIC REINFORCEMENT	.067" MIN. STL	MAX. 20"
7	NOTE 3.	HINGE REINFORCEMENT DOOR ASTM A621	.167" MIN. STL.	1.28" X 9.19"
8	NOTE 3.	HINGE REINFORCEMENT FRAME ASTM A621	.167" MIN. STL.	1.3" X 9.187" MAX.
9	NOTE 3.	4.5" X 4.5" BUTT HINGES (SEE THIS SHT)	.134 MIN.	(8) #12-24 MS PER HINGE
		OPTIONAL CONTINUOUS HINGE (SEE THIS SHT)	.067" MIN. STL/.12 ALUM	MAX. 95"
10	1	CORE MATERIAL (SHEET 4): A) HONEYCOMB B) STEEL STIFFENED C & F) POLYSTYRENE D) POLYURETHANE/POLYISOCYANURATE E) MINERAL BOARD TEMPERATURE RISE CORE		
11	1	LOCKING HARDWARE – SEE SHEET 2 TABLE 1.		
12	1	THRESHOLD SILL W/BUMPER GASKET 1) ZERO 566A 2) NAT'L GUARD 950A — SEE TAB. 3&4, SHT.5	.100" ALUM. 6063 T5	5.50"X0.5"X48"MAX.
13	NOTE 2.	JAMB ANCHOR ASTM A924	SEE SHEET 4	
14	3	PS074 WEATHER STRIPPING	TPE	MAX. 24'
15	1	FAS-SEAL DOOR SWEEP	TPE	MAX. 48"
16	2	END CHANNEL ASTM A924 (14 GA – INVERTED)		.69" X 1.65" X 48" MAX.
17	AS NEEDED	BUTYL RUBBER OR 100% SILICONE		
18	1	GLAZING HOLDING TRIM		34.25" X 74.5" EXPOSED GLASS MAX.
		#1) DEZIGNER TRIM	.032" MIN. STL	
		#2) STEEL OVERLAPPING TRIM UP TO 3/4" GLASS		
		#3) STEEL OVERLAPPING TRIM FOR 5/8" GLASS & THICKER		
		#4) HIGH SECURITY VISION FRAME: SG-10 BY ANEMOSTAT	.093" MIN. STL.	
		#4) HIGH SECURITY VISION FRAME: VLF-S10 BY AIR LOUVERS	.123" MIN. STL.	
19	NOTE 10.	CUTOUT REINFORCEMENT CHANNEL (18 GA)	.047" MIN. STL	0.5" X 1.56" X 75.5" MAX.
20	1	DOOR SLAB (16 OR 14 GA)	SEE SHEET 4	4' X 8' MAX.
21	1	BY ZERO INT'L: DOOR SEAL No.8144FS; BY STEELCRAFT: DOOR SEAL PS074	TPE	MAX. 24'
22	2	BY ZERO INT'L: DOOR SWEEP No.539; BY NGP: DOOR SWEEP No.202N	TPE	MAX. 86" OR 96"
23	1	BY ZERO INT'L: DOOR SWEEP No.139; BY NGP: OMIT	SEE SHEET 5	MAX. 36" OR 48"
24	1	BY ZERO INT'L: ADJUSTABLE STOP No.475; BY NGP: ADJUSTABLE STOP No.170N	TPE	MAX. 36" OR 48"
25	1	BY ZERO INT'L: RAIN DRIP No.11; BY NGP: DRIP CAP No.16A	SEE SHEET 5	MAX. 36" OR 48"
26	1	TOP CAP GALV. A60 ASTM A924	.020" MIN. STL	0.5" X 1.78" X 36" OR 48"

SEE NOTE 13

BEND RADIUS
THIRD ANGLE PROJECTION

DRAWN: YMF	DATE: 05/20/07
CHECKED	
APPROVED	
ENG. APPVL: JPD	11/15/07

Ingersoll Rand
Security Technologies

TITLE MIAMI-DADE PRODUCT APPROVAL

H-SERIES SINGLE GLASS DOORS (OUTSWING)
IR HARDWARE.

SIZE	FLAT	DWG NO.	REV
		IRGS07	H

SCALE: NTS | AUTOCAD | SHEET 3 of 13

A WIRE MASONRY ANCHOR INTO GROUT FILLED FRAME AND BLOCK WALL

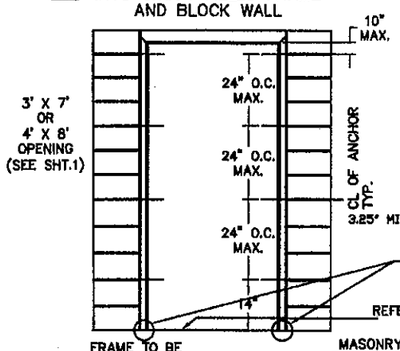

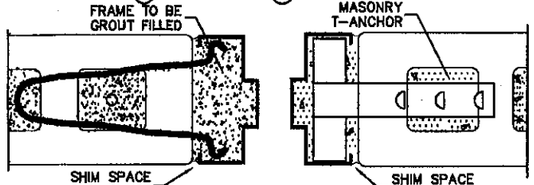

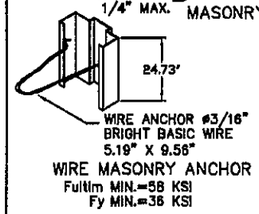

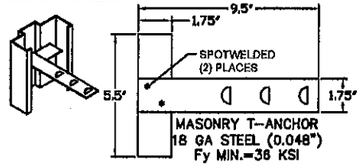

B WOOD STUD ANCHOR

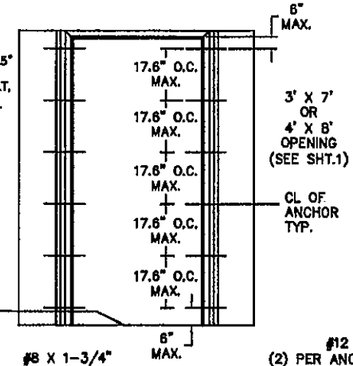

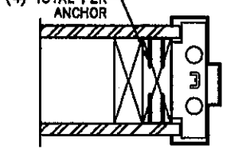

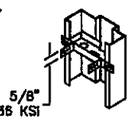

WOOD STUD OR UNIVERSAL ANCHOR (LOCK-IN OR WELD-IN)

C STEEL STUD ANCHOR

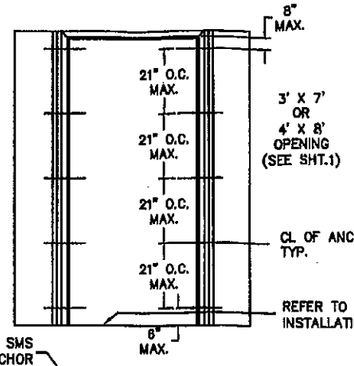

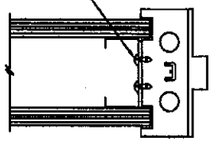

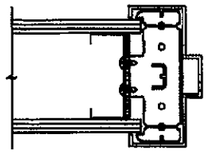

*STEEL STUD WALLS. SEE NOTE 1.

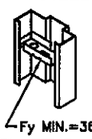

STEEL STUD ANCHOR WELD-IN OR LOCK-IN

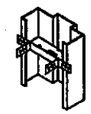

UNIVERSAL ANCHOR WELD-IN OR LOCK-IN

Gordon Thomas, P.E. Date
3759 Blossom Court
Mason, OH 45040
Florida # 46718

PRODUCT RENEWED
as complying with the Florida Building Code
Acceptance No. 10-0209.09
Expiration Date MAY 5, 2015
By Ishaq I. Chanda
Miami Dade Product Control Division

REVISIONS					
LTR	DESCRIPTION			DATE	APPROVED
B	REVISED	DWG	RAP	11/26/07	
C	REVISED	DWG	RAP	12/12/07	
D	REVISED	DWG	YMF	08/01/08	
E	REVISED	PER_MDBCCD	YMF	01/30/09	
F	REVISED	PER_MDBCCD	YMF	01/30/09	
G	REVISED	DWG	YMF	01/04/10	
H	REVISED	PER_MDBCCD	YMF	04/09/10	

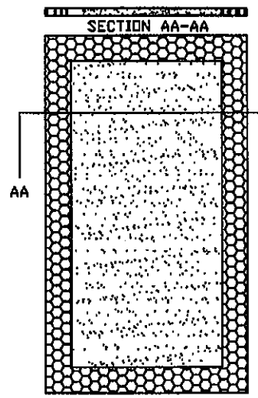

(A) EXPANDED POLYSTYRENE FOAM ~~BY HUNTSMAN CHEMICAL CORP GRADES 54 AND 86~~ DENSITY: 1.0 LBS/FT³

N/A ~~5/14/12~~

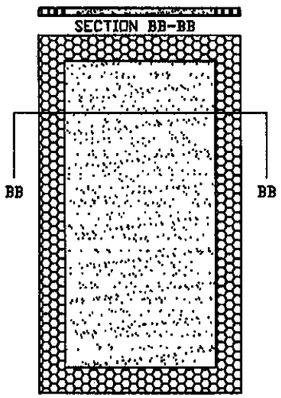

(B) POLYISOCYANURATE 200 (POLYURETHANE) BY ELFOAM. DENSITY: 2 LBS/FT³

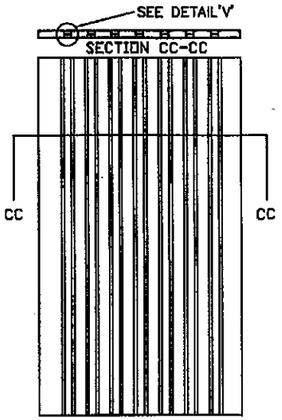

(C) STEEL STIFFENED HAT SHAPED SECTIONS 22 GA. MIN.

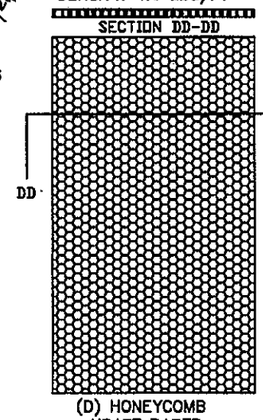

(D) HONEYCOMB KRAFT PAPER.

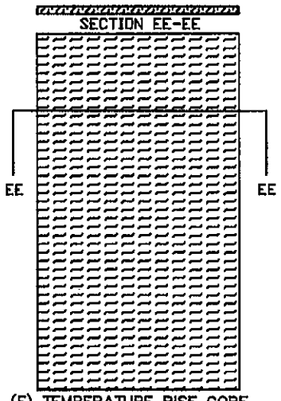

(E) TEMPERATURE RISE CORE MINERAL FIBER BOARD DENSITY: 17±1.5 LBS/FT³

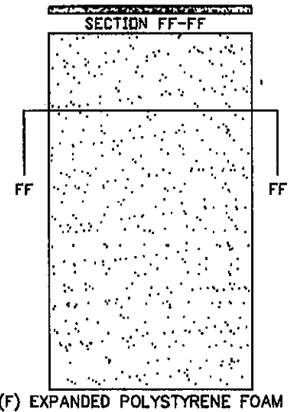

5/14/12 (F) EXPANDED POLYSTYRENE FOAM ~~GRADES 54/86~~, DENSITY: 1.0 LB/FT³ OR POLYISOCYANURATE 200 BY ELFOAM. DENSITY: 2 LBS/FT³

D EXISTING MASONRY ANCHOR (EMA) INTO CONCRETE WALL OR CMU

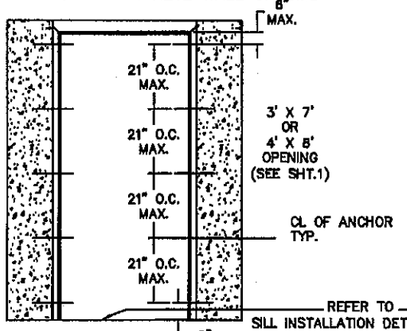

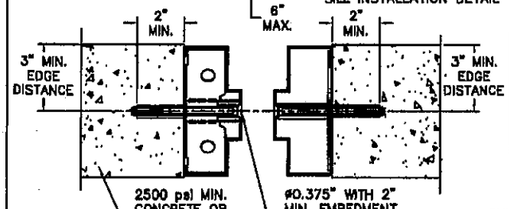

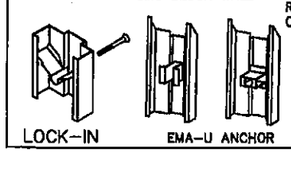

E EXISTING MASONRY ANCHOR (EMA) WITH LAG BOLT INTO WOOD STUD WALL

~~PRODUCT REVISED~~
~~as complying with the Florida Building Code~~
~~Acceptance No. 12-0305.15~~
~~Expiration Date 5/5/15~~
~~By Ishaq I. Chanda~~
~~Miami Dade Product Control~~

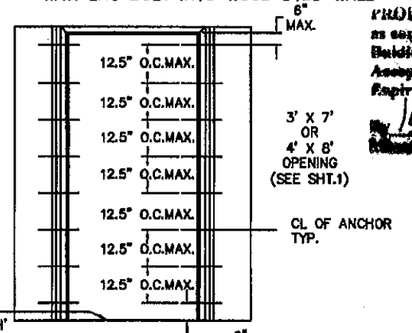

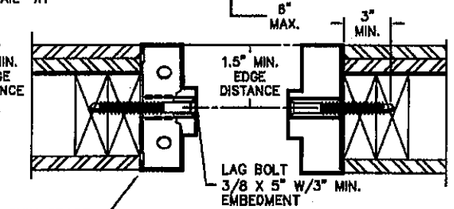

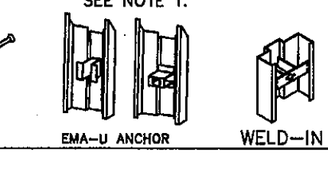

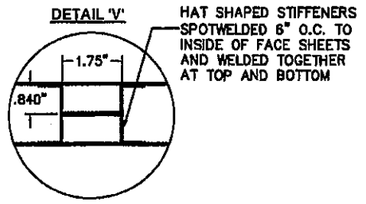

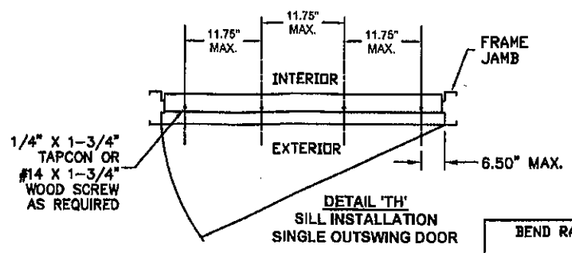

NOTES:
1.(*)WOOD OR (*)STEEL STRUCTURAL MEMBERS OF WOOD AND STEEL-STUD WALLS MUST BE DESIGNED TO CARRY AT LEAST 210 #/FT. LOAD FOR ASSEMBLIES RATED 50 PSF, 312 #/FT. FOR 75 PSF, AND 416#/FT. FOR 100 PSF, WHICH SHOULD BE VERIFIED BY THE APPROPRIATE OFFICIAL.
2.NUMBER OF ANCHORS FOR VARIOUS OPENING HEIGHTS IS LIMITED BY MAXIMUM DISTANCE BETWEEN ANCHORS, SHOWN ON THIS SHEET.
3.CORE MATERIAL SHOWN WITHOUT DOOR CUTOUTS AND REINFORCEMENTS.
4.APPLY CAULK AS NEEDED.
5.FOR SILL INSTALLATION AND ANCHORING SEE SHT 3 & 4.

BEND RADIUS
THIRD ANGLE PROJECTION

DRAWN: YMF	DATE: 05/20/07
CHECKED:	
APPROVED:	
ENG. APPVL: JPD	11/15/07

Ingersoll Rand
Security Technologies

TITLE MIAMI-DADE PRODUCT APPROVAL

FRAME ANCHOR DETAILS & INSTALLATION DOOR CORE OPTIONS.

SIZE	FLAT	DWG NO.	REV
		IRGS07	H

SCALE: NTS | AUTOCAD | SHEET 4 of 13

TABLE 3.

PERIMETER SEAL HARDWARE WHEN WATER INFILTRATION REQUIREMENT DOES APPLY					
ITEM NUMBER SHT 3. TABLE 2	DESCRIPTION	ALLOWABLE DESIGN PRESSURE, PSF (*UP TO)	MODEL No./ MANUFACTURER	PART DETAIL	INSTALLATION DETAIL
12	THRESHOLD	+75	566/ZERO INT'L	'T1'	'P1'
			950/NGP	'T2'	'P2'
15	FAS-SEAL SWEEP	+75	STEELCRAFT	'S'	'P1' & 'P2'
21 or 14	SELF ADHESIVE DOOR SEAL	+75	8144F/ZERO INT'L	'U'	'M' & 'N'
			PS074/STEELCRAFT	'Q'	
22	DOOR SWEEP	+75	539/ZERO INT'L	'W1'	'N'
			202N/NGP	'W2'	
23	DOOR SWEEP	+75	139/ZERO INT'L	'X'	'P1'
24	ADJUSTABLE STOP	+75	475/ZERO INT'L	'Y1'	'M'
			170N/NGP	'Y2'	
25	RAIN DRIP CAP	+75	11/ZERO INT'L	'Z1'	'P1'
			16A/NGP	'Z2'	'P2'
26	DOOR TOP CAP	+75	STEELCRAFT	'R'	'M'

* - SEE ELEVATIONS AND DESIGN PRESSURES ON SHEET 1

TABLE 4.

PERIMETER SEAL HARDWARE WHEN WATER INFILTRATION REQUIREMENT DOES NOT APPLY				
ITEM NUMBER SHT 3. TABLE 2	DESCRIPTION	MODEL No. MANUFACTURER	PART DETAIL	INSTALLATION DETAIL
12	THRESHOLD	566 BY ZERO INT'L	'T1'	'K'
		950 BY NATIONAL GUARD	'T2'	
15	FAS-SEAL DOOR SWEEP	STEELCRAFT	'S'	'K'
14	PS-074 SELF ADHESIVE WEATHERSTRIPPING	STEELCRAFT	'Q'	'J' & 'L'
–	–	–	–	–
–	–	–	–	–
–	–	–	–	–
–	–	–	–	–
26	DOOR TOP CAP	STEELCRAFT	'R'	OPTIONAL

REVISIONS

LTR	DESCRIPTION			DATE	APPROVED
A	APPROVAL	DWG	YMF	05/20/07	
B	REVISED	DWG	RAP	10/11/07	
C	REVISED	DWG	RAP	12/10/07	
D	REVISED	DWG	YMF	08/01/08	
E	REVISED	PER_MDBCCO	YMF	01/30/09	
F	REVISED	PER_MDBCCO	YMF	02/04/09	
G	REVISED	DWG	YMF	01/04/10	
H	REVISED	DWG	YMF	04/09/10	

NOTES:

1. SLOT LOCATIONS MAY VARY WITH DIFFERENT DOOR WIDTH.
2. DOOR SWEEP RIGID SECTION IS MADE OF PRO-FAX #PD-199 POLYPROPYLENE HOMOPOLYMER.
3. DOOR SWEEP FLEXIBLE SECTION IS MADE OF SANTOPRENE #101-73
4. FAS-SEAL DOOR SWEEP (14), AND THRESHOLD (11) ARE REQUIRED FOR ALL INSTALLATIONS.

4/14/10
Gordon Thomas, P.E. Date
3759 Blossom Court
Mason, OH 45040
Florida # 46718

PART DETAILS

UP TO +75 PSF WHEN WATER INFILTRATION REQUIREMENTS APPLY

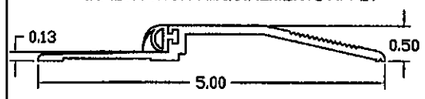

(12) DETAIL 'T1'
ZERO INT'L 566 SERIES THRESHOLD

UP TO +75 PSF WHEN WATER INFILTRATION REQUIREMENTS APPLY

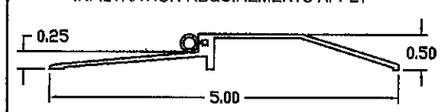

(12) DETAIL 'T2'
NATIONAL GUARD 950 SERIES THRESHOLD
WITH SILICONE, VINYL
OR NEOPRENE BUMPER

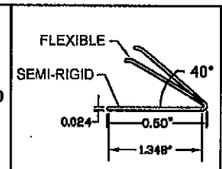

(14) DETAIL 'Q'
PS-074
SELF-ADHESIVE
WEATHERSTRIPPING

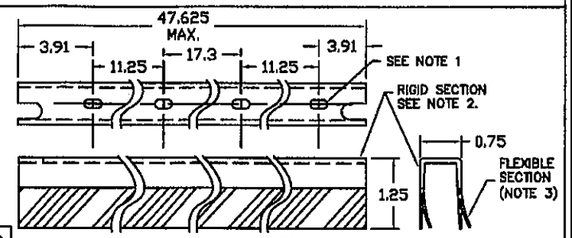

(15) DETAIL 'S'
FAS-SEAL DOOR SWEEP

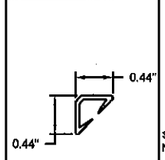

(21) DETAIL 'U'
8144F
DOOR SEAL

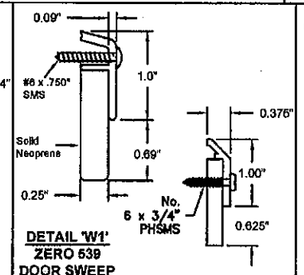

(22) DETAIL 'W1'
ZERO 539
DOOR SWEEP

DETAIL 'W2'
NGP 202
DOOR SEAL

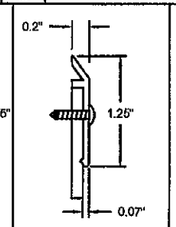

(23) DETAIL 'X'
ZERO 139
DOOR SWEEP

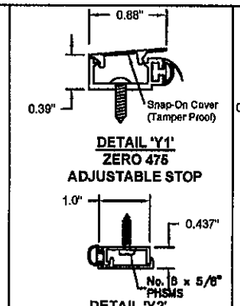

(24) DETAIL 'Y1'
ZERO 475
ADJUSTABLE STOP

DETAIL 'Y2'
NGP 170N
ADJUSTABLE STOP

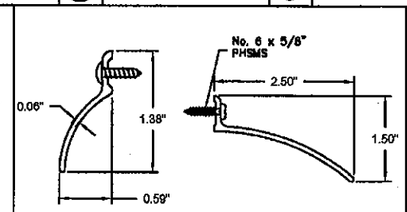

(25) DETAIL 'Z1'
ZERO 11
RAIN DRIP CAP

DETAIL 'Z2'
NGP 16
RAIN DRIP CAP

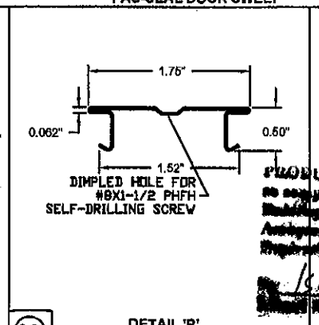

(26) DETAIL 'R'
24 GA TOP CAP

PRODUCT REVISED
as complying with the Florida Building Code
Acceptance No 12-0305.15
Expiration Date 5/5/15
By Ishaq I. Chaudhry
Miami Dade Product Control Division

PERIMETER SEAL INSTALLATION DETAILS WHEN WATER INFILTRATION REQUIREMENTS APPLY

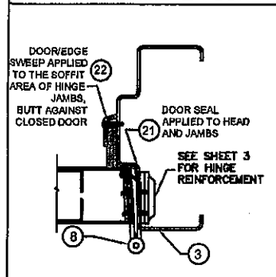

DETAIL 'N1'
HINGE JAMB
SWEEP INSTALLATIION

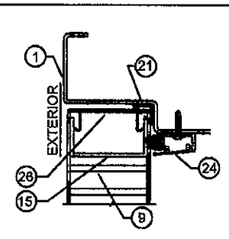

DETAIL 'M'
TOP OF DOOR/HEAD
WEATHERSTRIPPING

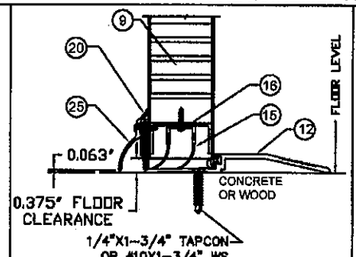

DETAIL 'P1'
BOTTOM OF DOOR
ZERO WEATHERSTRIPPING
AND SILL INSTALLATION

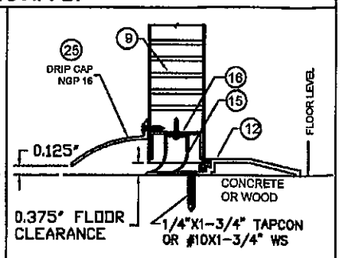

DETAIL 'P2'
BOTTOM OF DOOR
NGP WEATHERSTRIPPING
AND SILL INSTALLATION

PERIMETER SEAL INSTALLATION DETAILS WHEN WATER INFILTRATION REQUIREMENTS DO NOT APPLY

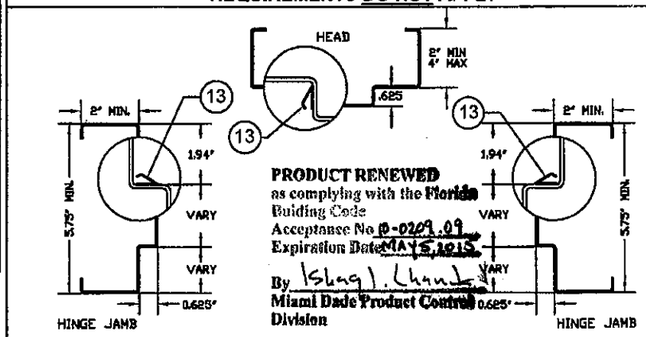

DETAIL 'J'
PERIMETER DOOR SEAL INSTALLATION IN HEAD AND JAMBS

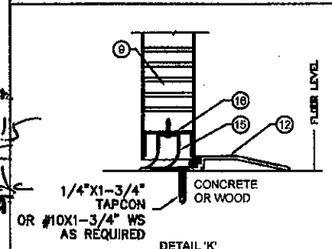

DETAIL 'K'
BOTTOM OF DOOR
WEATHERSTRIPPING AND SILL INSTALLATION

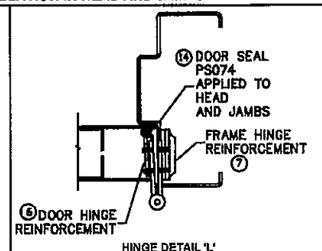

HINGE DETAIL 'L'
HINGE SIDE
WEATHERSTRIPPING INSTALLATION

BEND RADIUS

THIRD ANGLE PROJECTION

DRAWN	DATE
YMF	05/20/07
CHECKED	
APPROVED	
ENG. APPVL JPD	10/11/07

Ingersoll Rand
Security Technologies

TITLE MIAMI-DADE PRODUCT APPROVAL

SINGLE GLASS DOOR PERIMETER SEAL HARDWARE.

SIZE	FLAT	DWG NO.	REV
		IRGS07	H
SCALE: NTS	AUTOCAD		SHEET 5 of 13

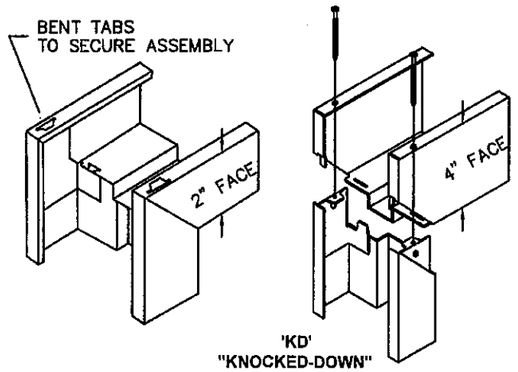

'KD'
"KNOCKED-DOWN"
ASSEMBLY

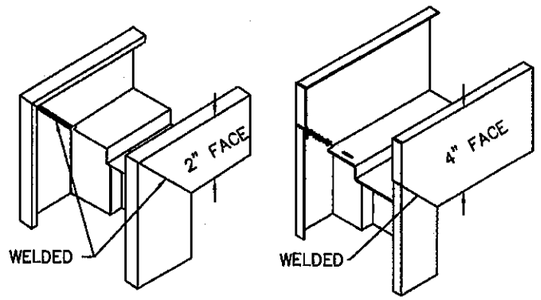

'SUA'
SET-UP AND ARC-WELDED
ASSEMBLY

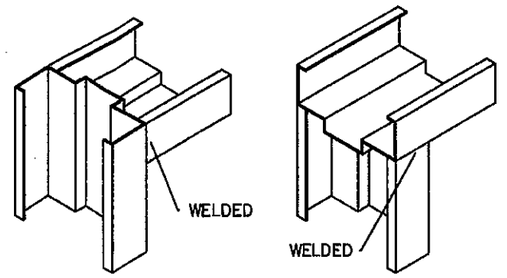

HEAD NOTCHED
AND BUTTED BETWEEN JAMBS

HEAD SITS ON TOP
OF NOTCHED JAMBS

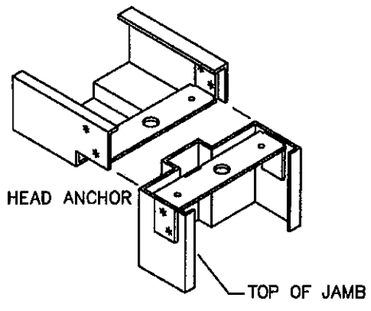

HEAD NOTCHED
AND BOLTED ON TOP OF JAMBS

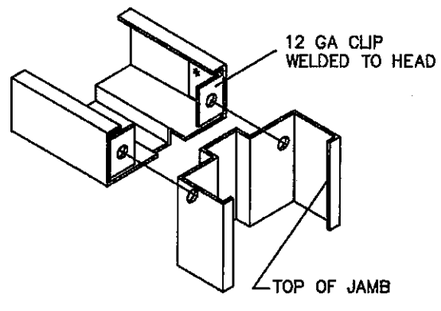

HEAD NOTCHED
AND BOLTED BETWEEN JAMBS

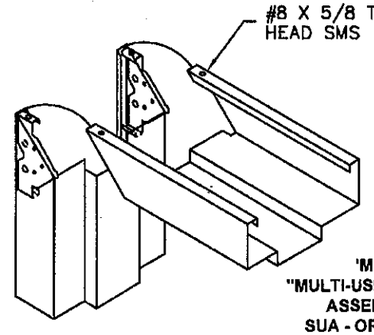

'MU'
"MULTI-USE" SERIES
ASSEMBLY
SUA - OPTIONAL

REVISIONS				
LTR	DESCRIPTION		DATE	APPROVED
A	APPROVAL DWG	YMF	05/20/07	
B	REVISED DWG	RAP	11/26/07	
C	REVISED DWG	RAP	12/12/07	
D	REVISED DWG	YMF	08/06/08	
E	REVISED PER_MDBCCO	YMF	01/30/09	
F	REVISED PER_MDBCCO	YMF	02/04/09	
G	REVISED DWG	YMF	01/04/10	
H	REVISED DWG	YMF	04/09/10	

AVAILABLE DOOR CONFIGURATIONS

TABLE 5.

CORE MATERIAL PER SHT.4	MAXIMUM OPENING SIZE WIDTH	HEIGHT	SKIN MATERIAL DESCR.	GA./MIN. THK
HONEYCOMB POLYSTYRENE POLYURETHANE (POLYISOCYANURATE) TEMPERATURE RISE STEEL STIFFENED	VARIES SEE SHT 2 TABLE 1		CRS GALV	16/.053" 14/.067"
HONEYCOMB POLYSTYRENE POLYURETHANE	VARIES SEE SHT 2 TABLE 1		STAINLESS STEEL	16/.053"

AVAILABLE FRAME CONFIGURATIONS

TABLE 6.

FRAME SERIES	JAMB DEPTH	MAXIMUM OPENING SIZE WIDTH	HEIGHT	MATERIAL DESCR.	GA./MIN. THK
F	5.75" MIN.	VARIES SEE SHT 2 TABLE 1		CRS/HRS GALV	16/.053" 14/.067" 12/.099"
				STAINLESS STEEL	16/.053"
MU	5.75" MIN.	VARIES SEE SHT 2 TABLE 1		CRS/HRS GALV	16/.053" 14/.067"

TYPICAL FRAME PROFILE
DOUBLE RABBET

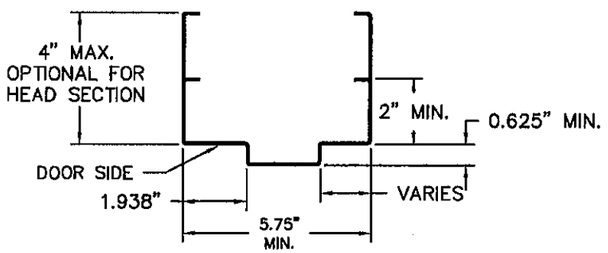

OPTIONAL FRAME PROFILE
SINGLE RABBET

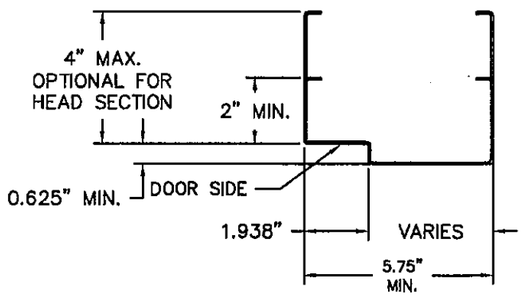

TABLE 7. STEEL MECHANICAL PROPERTIES

MATERIAL	ASTM REF.	YIELD KSI	TENSILE KSI
CRS	A1008	MIN. 26.5	MIN. 46
HRS	A1011		
GALV: A60	A924		
SS: 304,306	A240	MIN. 31.2	MIN. 73.2

NOTES:

1. DOOR CONSTRUCTION
1.1. MINIMUM DOOR THICKNESS – 1 3/4"
1.2. DOOR SIZE MAY VARY, SUBJECTED TO COMPLIANCE WITH FLORIDA BUILDING CODE AND PRODUCT AVAILABILITY FROM MANUFACTURER (SEE SHEET 2 FOR AVAILABLE HARDWARE)

2. FRAME CONSTRUCTION
1.1. MINIMUM JAMB DEPTH – 5 3/4", STOP HEIGHT – 5/8"
2.2. FRAMES AVAILABLE AS FLUSH (F–SERIES) AND MULT–USE (MU–SERIES) (SEE TABLE 6)

3. FOR DOOR AND FRAME MATERIAL SPECIFICATIONS REFERENCE SEE TABLE 7.

Gordon Thomas, P.E.
3759 Blossom Court
Mason, OH 45040
Florida # 46718
Date 4/14/10

PRODUCT REVISED
as complying with the Florida Building Code
Acceptance No. 12-0305.16
Expiration Date 5/5/15
By Ishaq I. Chanda
Miami Dade Product Control

PRODUCT RENEWED
as complying with the Florida Building Code
Acceptance No. 10-0209.09
Expiration Date MAY 5, 2015
By Ishaq I. Chanda
Miami Dade Product Control Division

BEND RADIUS

THIRD ANGLE PROJECTION

DRAWN	YMF	DATE 05/20/07
CHECKED		
APPROVED		
ENG. APPVL	JPD	11/15/07

Ingersoll Rand
Security Technologies

TITLE MIAMI–DADE PRODUCT APPROVAL
FRAME PROFILE, CORNER DETAILS AND DOOR FRAME MATERIAL, AND SIZE OPTIONS.

SIZE	FLAT	DWG NO.	REV
		IRGS07	H
SCALE: NTS	AUTOCAD		SHEET 6 of 13

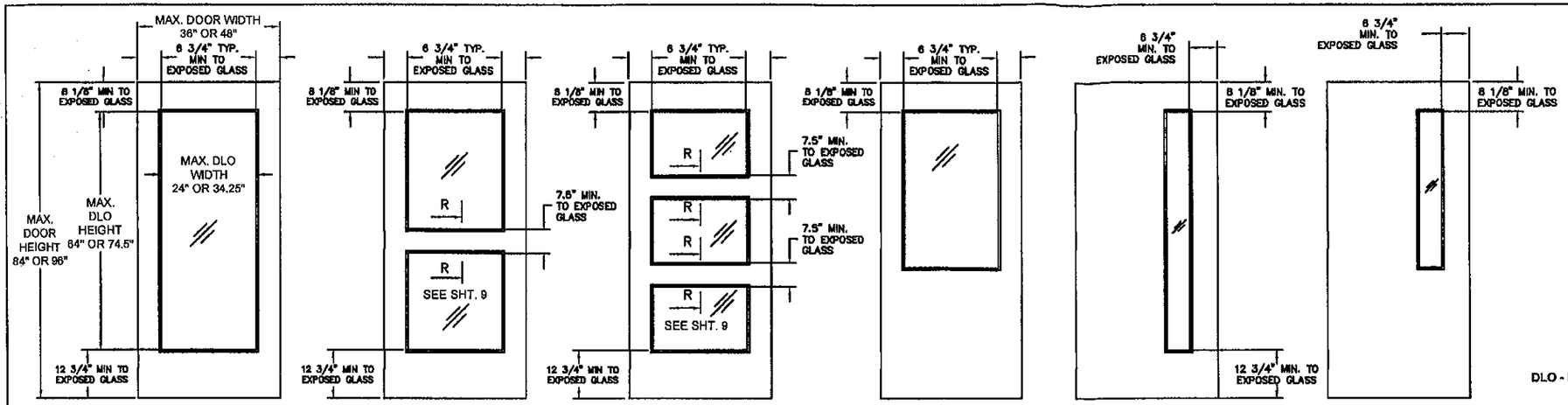

DLO - DAY LIGHT OPENING

REVISIONS				
LTR	DESCRIPTION		DATE	APPROVED
A	APPROVAL DWG	YMF	05/20/07	
B	REVISED DWG	RAP	11/26/07	
C	REVISED DWG	RAP	12/12/07	
D	REVISED DWG	YMF	07/29/08	
E	REVISED PER_MDBCCD	YMF	01/30/09	
F	REVISED PER_MDBCCD	YMF	02/04/09	
G	REVISED DWG	YMF	01/04/10	
H	REVISED DWG	YMF	04/09/10	

4/14/10
Gordon Thomas, P.E. Date
3759 Blossom Court
Mason, OH 45040
Florida # 46718

PRODUCT RENEWED
as complying with the Florida Building Code
Acceptance No 10-0209.09
Expiration Date MAY 5 2015
By Ishaq I. Chaudhary
Miami Dade Product Control Division

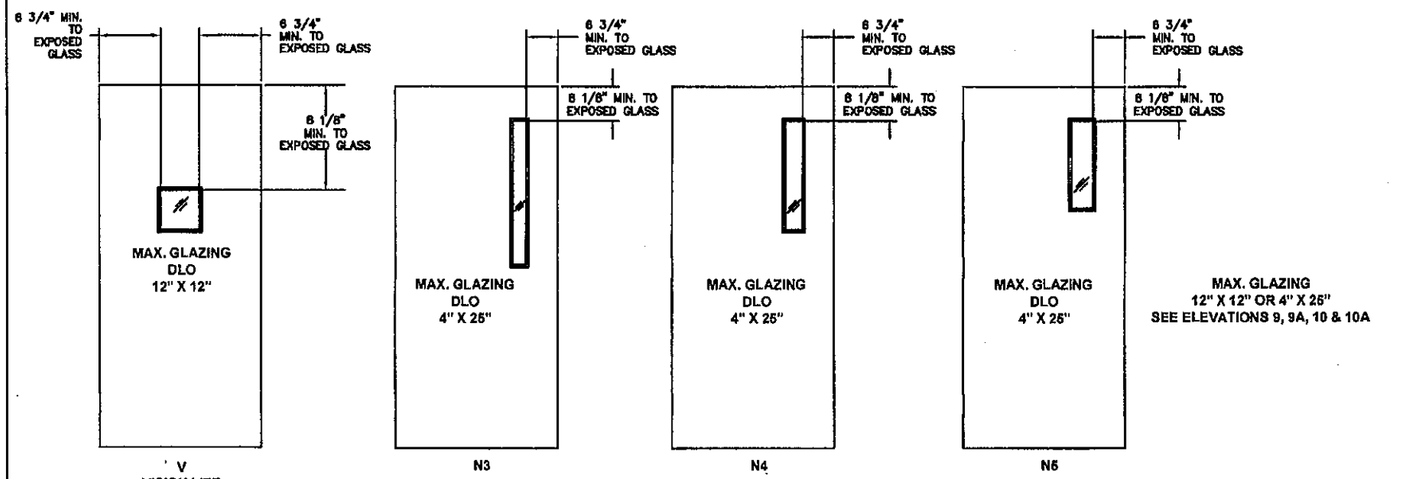

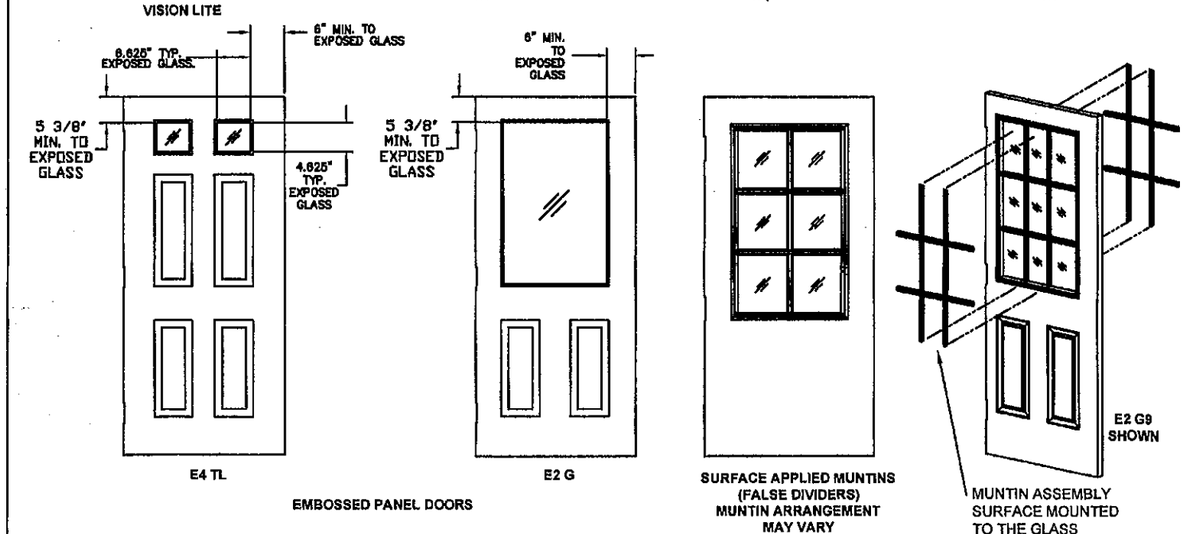

NOTES:

1. DOOR CONSTRUCTION
1.1. MINIMUM DOOR THICKNESS – 1 3/4"
1.2. MAXIMUM GLAZING DLO HEIGHT AND WIDTH AS PER SHEET 2.
1.3.GLAZING OPENING DLO SIZE WILL CHANGE IN PROPORTION WITH DOOR SIZE.
1.4. DOOR SIZE MAY VARY, SUBJECTED TO COMPLIANCE WITH FLORIDA BUILDING CODE AND PRODUCT AVAILABILITY FROM MANUFACTURER.
2. FRAME CONSTRUCTION
1.1. MINIMUM JAMB DEPTH – 5 3/4", STOP HEIGHT – 5/8"
2.2. FRAMES AVAILABLE AS FLUSH (F-SERIES) AND MULT-USE (MU-SERIES) (SEE TABLE.6 SHT 6.)
3. FOR DOOR & FRAME MATERIAL SPECIFICATIONS REFERENCE SEE TABLE. 7 SHT 6.
4. GLASS LIGHTS NOT LIMITED TO THOSE SHOWN PROVIDED DIMENSIONS SHOWN ARE MAINTAINED, NOT TO EXCEED DLO PER THIS SHEET

PRODUCT REVISED
as complying with the Florida Building Code
Acceptance No 12-0305.15
Expiration Date 5/5/15
By Ishaq I. Chaudhary
Miami Dade Product Control

BEND RADIUS
THIRD ANGLE PROJECTION

DRAWN	YMF	05/20/07
CHECKED		
APPROVED		
ENG. APPVL	JPD	11/15/07

Ingersoll Rand
Security Technologies

TITLE MIAMI-DADE PRODUCT APPROVAL

GLASS DOOR CONFIGURATIONS.

SIZE	FLAT	DWG NO.	REV
		IRGS07	H
SCALE: NTS	AUTOCAD		SHEET 7 of 13

GLAZING TYPE 1

GLAZING DETAIL 'D'
DEZIGNER TRIM OPTION

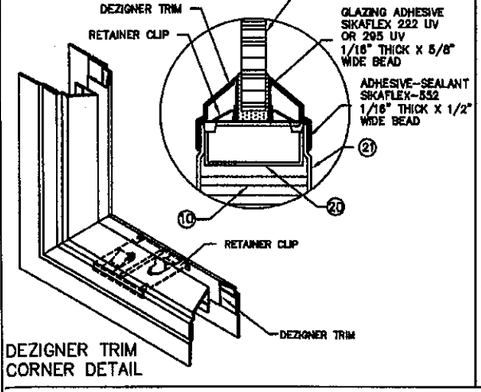

DEZIGNER TRIM
CORNER DETAIL

GLAZING TYPE 1

GLAZING DETAIL 'E'
STEEL TRIM OPTION

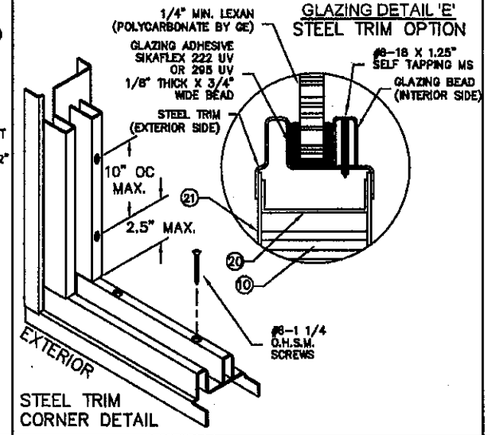

STEEL TRIM
CORNER DETAIL

GLAZING TYPE 2

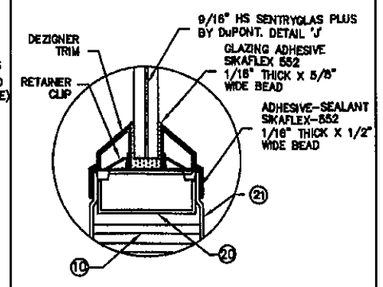

DEZIGNER TRIM

GLAZING TYPE 2

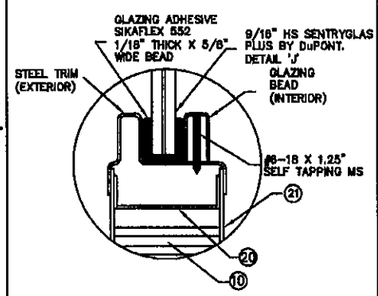

STEEL TRIM

GLAZING DETAIL 'K'
LAMINATED GLASS

LAMINATED GLASS DETAILS

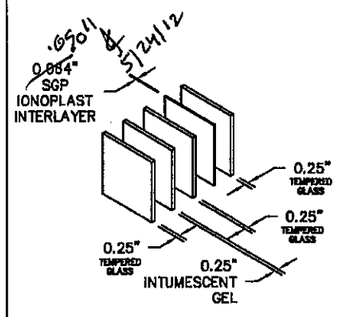

CONSTRUCTION DETAIL 'H'
SUPERLITE II-XL™ BY SAFTI
WITH SENTRYGLAS PLUS™
(SGP™) INTERLAYER
BY DuPONT

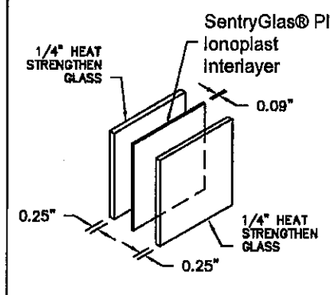

CONSTRUCTION DETAIL 'J'
9/16" HS LAMINATED GLASS WITH
SENTRYGLAS PLUS™ INTERLAYER
(BY DuPONT)

GLAZING TYPE 3

GLAZING DETAIL 'F'
VISION FRAME OPTION

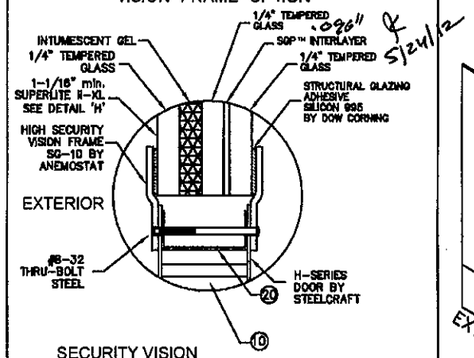

SECURITY VISION
FRAME SG-10 BY ANEMOSTAT
OR VLF-S10 BY AIR LOUVERS
PROFILE SHOWN FOR 1-13/16" GLASS

GLAZING TYPE 3

GLAZING DETAIL 'G'
1" STEEL TRIM OPTION

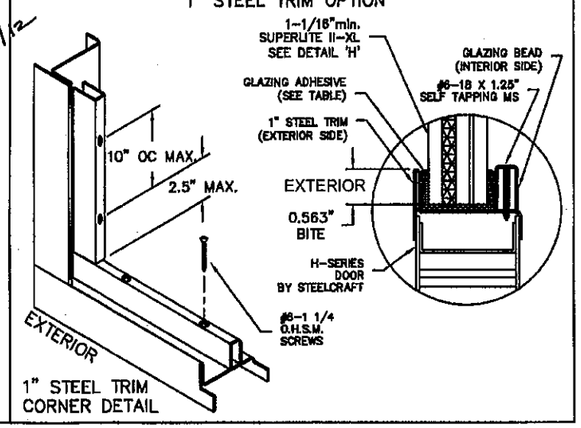

1" STEEL TRIM
CORNER DETAIL

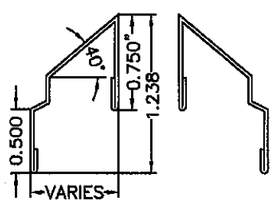

DEZIGNER TRIM
PROFILE
MATERIAL: 24 GA A40 STEEL

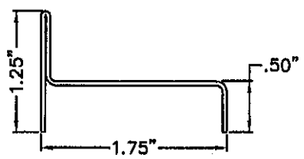

1" STEEL TRIM
MATERIAL: 20 GAGE A40 STEEL

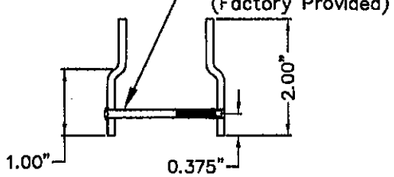

HIGH SECURITY
METAL VISION FRAME
MATERIAL: 12 GAGE OR 10 GAGE
ANEMOSTAT SG-10 AND
AIR LOUVERS VLF-S10

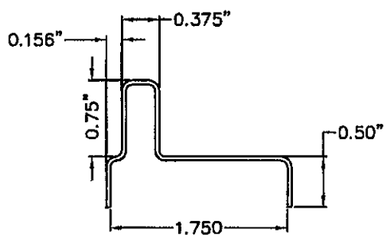

STEEL TRIM
MATERIAL: 20GA A40 STEEL

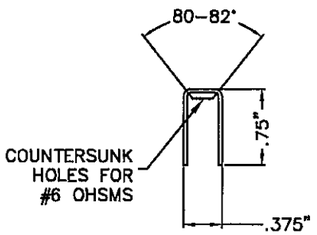

GLAZING BEAD FOR
STEEL OVERLAPPING
TRIMS
20 GAGE A40 STL

PRODUCT REVISED
as complying with the Florida Building Code
Acceptance No. 12-0305.15
Expiration Date 5/5/15
By Ishaq I. Chanda
Miami Dade Product Control

Gordon Thomas, P.E.
3759 Blossom Court
Mason, OH 45040
Florida # 46718
4/14/10 Date

BEND RADIUS

THIRD ANGLE PROJECTION

DRAWN	YMF
DATE	05/20/07
CHECKED	
APPROVED	
ENG. APPVL	JPD
	11/15/07

Ingersoll Rand
Security Technologies

TITLE MIAMI-DADE PRODUCT APPROVAL

GLASS TRIM OPTIONS.

SIZE	FLAT	DWG NO.	REV
		IRGS07	H
SCALE: NTS	AUTOCAD		SHEET 8 of 13

REVISIONS

LTR	DESCRIPTION			DATE	APPROVED
A	APPROVAL	DWG.	YMF	05/20/07	
B	REVISED	DWG.	RAP	11/26/07	
C	REVISED	DWG.	RAP	12/12/07	
D	REVISED	DWG.	YMF	08/06/08	
E	REVISED	PER_MDBCCO	YMF	01/30/09	
F	REVISED	PER_MDBCCO	YMF	02/05/09	
G	REVISED	DWG	YMF	01/04/10	
H	REVISED	DWG	YMF	04/09/10	

NOTES:

1. SEE SHT.1 FOR ELEVATIONS, SHT.2 FOR SIZES AND SHT.6 FOR DOOR & FRAME MATERIAL SPECIFICATIONS.
2. SEE SHT.3 NOTE 2. FOR ANCHOR REQUIREMENTS
3. SEE SHT. 4 FOR WALL CONSTRUCTION AND ANCHORING SYSTEM
4. SEE SHT. 6 FOR AVAILABLE OPENING SIZES, JAMB DEPTHS AND SPECIFICATIONS
5. APPROVED HARDWARE INSTALLATION IS PER MANUFACTURER'S INSTRUCTIONS

PRODUCT RENEWED
as complying with the Florida Building Code
Acceptance No. 10-0209.09
Expiration Date MAY 5 2015
By Ishaq I. Chanda
Miami Dade Product Control Division

TABLE 8.

GLAZING TYPES AND METHODS

GLAZING TYPE	GLAZING MATERIAL	TRIM TYPE	SEALANT -ADHESIVE	GLAZING ADHESIVE
1	LEXAN BY GE 1/4" OR 1/2" DETAILS 'D' & 'E'	DEZIGNER 1/2" OR 1/4"	SIKAFLEX 552	SIKAFLEX 222UV OR 295UV 1/16" X 5/8" BEAD
		STEEL TRIM		
2	9/16" HS LAMINATED GLASS WITH SENTRYGLAS PLUS™ INTERLAYER (BY DUPONT) DETAIL 'K'	DEZIGNER 1/2"	SIKAFLEX 552	SIKAFLEX 552 OR DOW CORNING 995/975 1/16" X 5/8" BEAD
		STEEL TRIM		
		1" STEEL TRIM		
3	SUPERLITE II-XL™ BY SAFTI WITH SENTRYGLAS PLUS™ INTERLAYER (BY DUPONT) DETAILS 'F' & 'G'	1" STEEL TRIM (DETAIL 'G')	NONE	SIKAFLEX 552 OR DOW CORNING 995/975 1/16" X 5/8" BEAD
		SECURITY VISION FRAME SG-10 BY ANEMOSTAT OR VLF-S10 BY AIR LOUVERS (DETAIL 'F')	NONE	

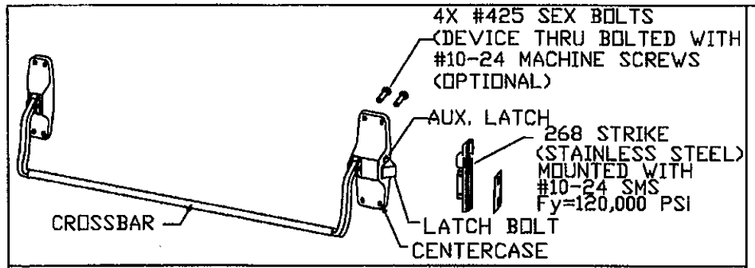

VON DUPRIN 88-F RIM DEVICE, USED IN CONFIGURATIONS: 7 & 8

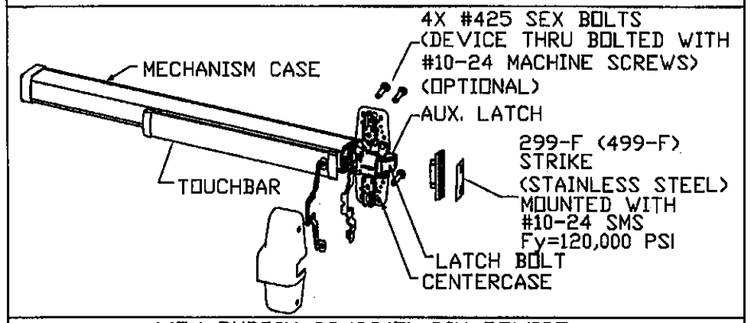

VON DUPRIN 98/99(F) RIM DEVICE
USED IN CONFIGURATIONS: 7 & 8

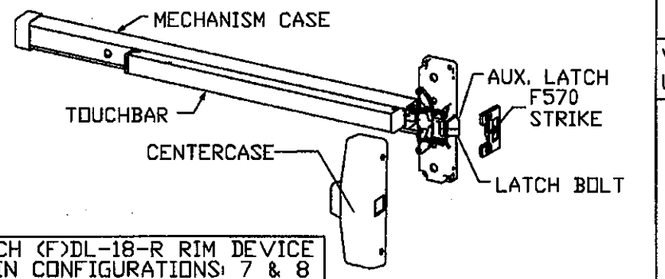

MONARCH (F)DL-18-R RIM DEVICE
USED IN CONFIGURATIONS: 7 & 8

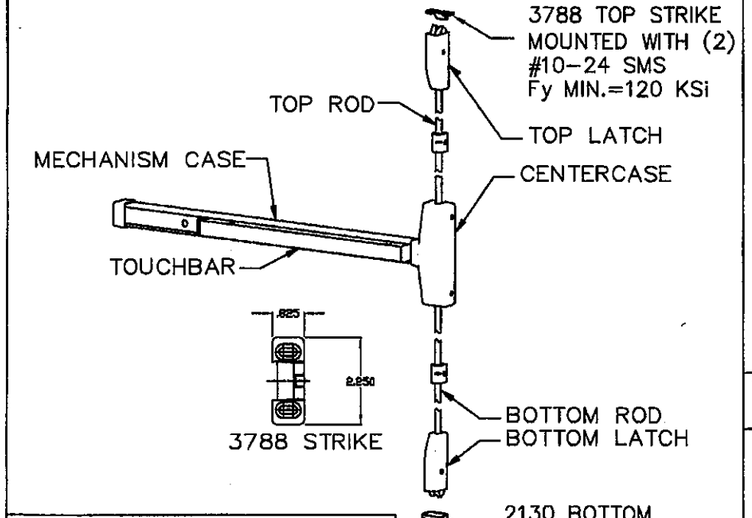

MONARCH (F)18-V SURFACE
VERTICAL ROD EXIT DEVICE
USED IN CONFIGURATIONS: 3

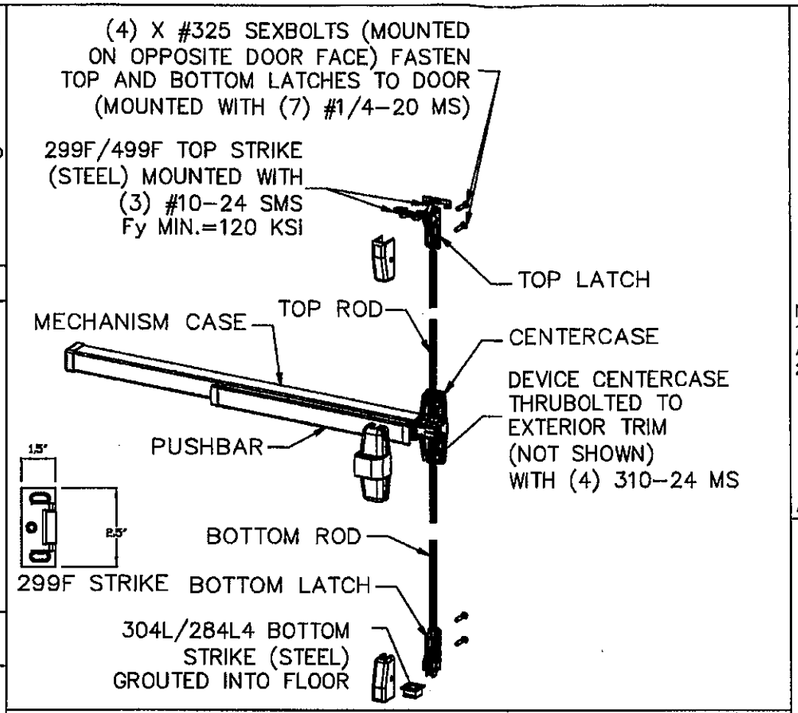

VON DUPRIN 98/9927(F) SURFACE VERTICAL ROD EXIT DEVICE
USED IN CONFIGURATIONS: 3

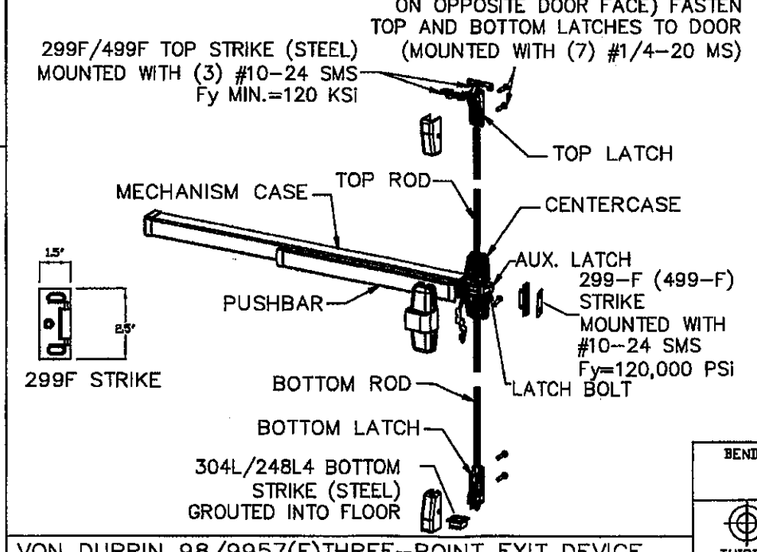

VON DUPRIN 98/9957(F)THREE-POINT EXIT DEVICE
USED IN CONFIGURATIONS: 5 & 6

Gordon Thomas, P.E.
3759 Blossom Court
Mason, OH 45040
Florida # 46718
Date 9/14/10

REVISIONS				
LTR	DESCRIPTION		DATE	APPROVED
A	APPROVAL DWG	YMF	05/20/07	
B	REVISED DWG	RAP	11/26/07	
C	REVISED DWG	RAP	12/12/07	
D	REVISED DWG	YMF	07/28/08	
E	REVISED PER_MDBCCD	YMF	01/30/09	
F	REVISED PER_MDBCCD	YMF	02/05/09	
G	REVISED DWG	YMF	01/04/10	
H	REVISED DWG	YMF	04/09/10	

NOTES:
1. ELECTRICAL FUNCTIONS/INSTALLATION IS NOT PART OF THIS APPROVAL, TO BE REVIEWED AND APPROVED BY BUILDING OFFICIAL
2. EXIT HARDWARE OPTIONS:
FOR 98/99 & XP98/99 SERIES - FUNCTIONS E, RX, LX, SS, EL, QEL, CX, F; TRIM: ALL APPLICABLE TRIMS AVAILABLE.
FOR 88-F SERIES - FUNCTION E; TRIM: ALL APPLICABLE TRIMS AVAILABLE. PN MODEL OFFERED.
FOR 33/35-F SERIES - FUNCTIONS RX, LX, EL, QEL, SS; TRIM: ALL APPLICABLE TRIMS AVAILABLE.
FOR 2670 GUARD-X; TRIM: ALL APPLICABLE TRIMS AVAILABLE.
FOR 18-R, F-18-C & 18-V SERIES - FUNCTIONS DL, EA, HWEA, DE, ELR, F, DM, LM, AE, LK, SM; TRIM: ALL APPLICABLE TRIMS AVAILABLE

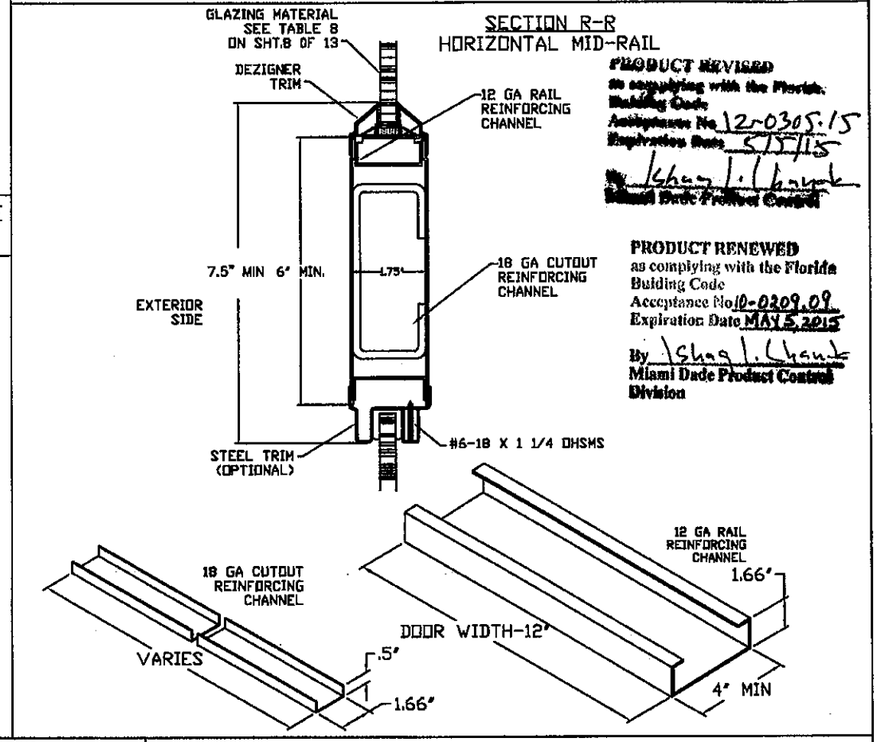

PRODUCT REVISED
as complying with the Florida Building Code
Acceptance No 12-0305.15
Expiration Date 5.5.15
By Ishaq I. Chanda
Miami Dade Product Control

PRODUCT RENEWED
as complying with the Florida Building Code
Acceptance No 10-0209.09
Expiration Date MAY 5, 2015
By Ishaq I. Chanda
Miami Dade Product Control Division

BEND RADIUS

THIRD ANGLE PROJECTION

DRAWN YMF	DATE 05/20/07
CHECKED	CDATE
APPROVED	ADATE
ENG. APPVL JPD	EDATE 11/15/07

Ingersoll Rand
Security Technologies

TITLE MIAMI-DADE PRODUCT APPROVAL

IR EXIT HARDWARE FOR GLASS SINGLE DOORS.

SIZE	FLAT	DWG NO.	REV
		IRGS07	H
SCALE: NTS	AUTOCAD		SHEET 9 of 13

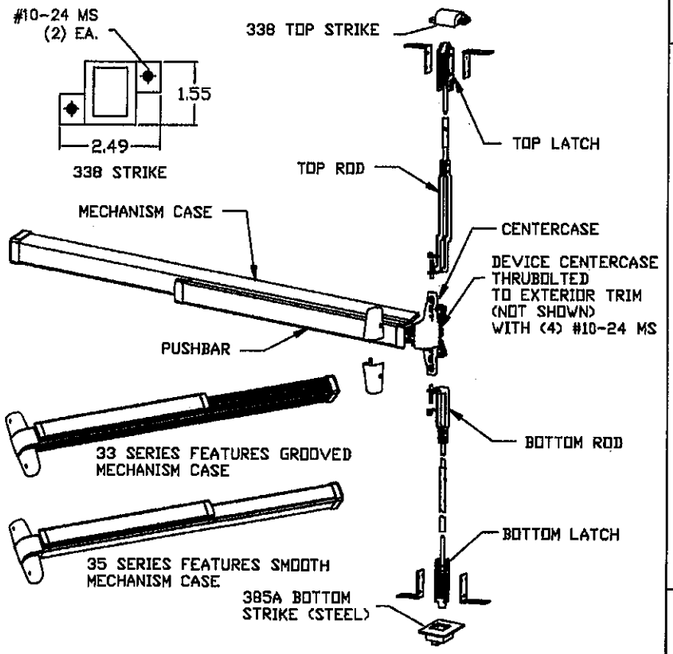

VON DUPRIN SERIES 33/3547A-F
USED IN CONFIGURATIONS: 4

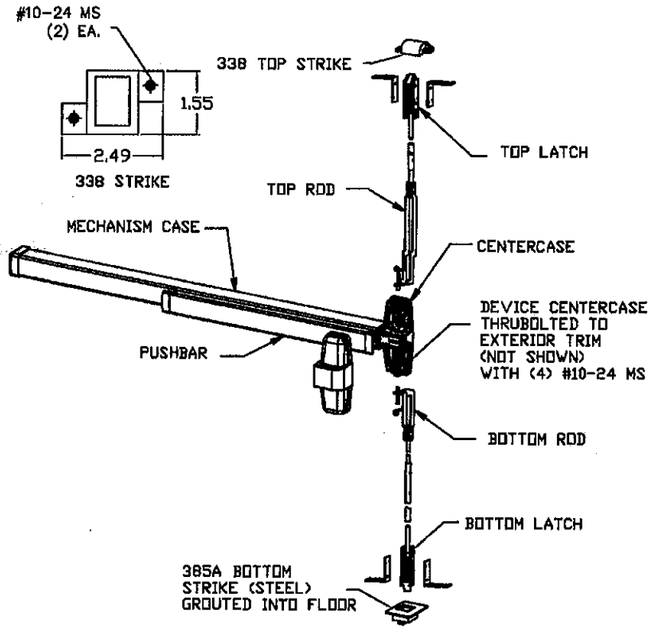

VON DUPRIN 98/9947-F (CONCEALED) VERTICAL ROD
USED IN CONFIGURATIONS: 4

MONARCH F-18-C CONCEALED VERTICAL ROD EXIT DEVICE
USED IN CONFIGURATIONS: 4

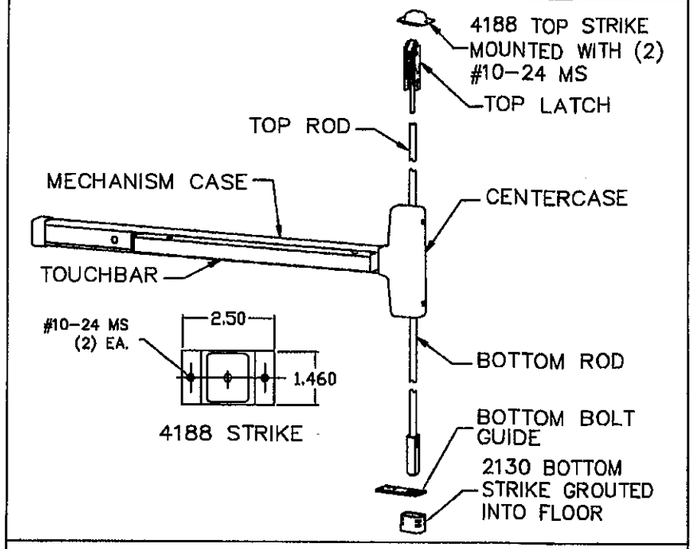

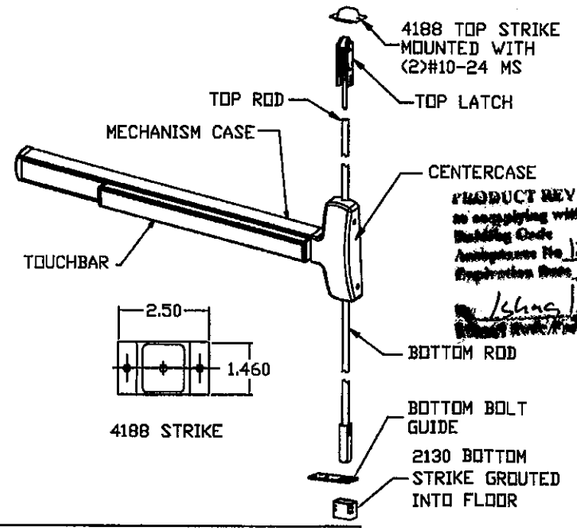

CONCEALED VERTICAL ROD EXIT DEVICE FALCON F-25-C
USED IN **DOOR CONFIGURATION 4** (SEE SHT.1)

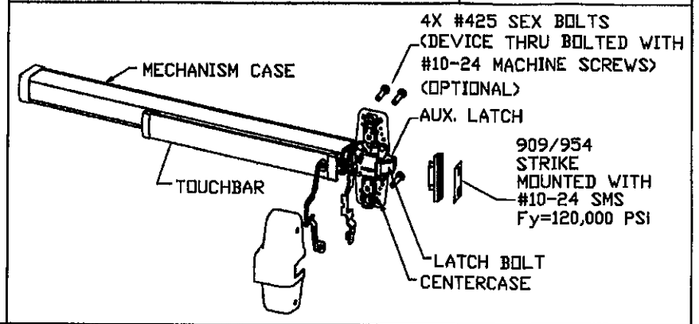

VON DUPRIN XP98/99(F)
USED IN CONFIGURATIONS: 9 & 9A

PRODUCT RENEWED
as complying with the Florida
Building Code
Acceptance No. 10-0204.09
Expiration Date MAY 5, 2015
By Ishan L. Chand
Miami Dade Product Control
Division

REVISIONS				
LTR	DESCRIPTION		DATE	APPROVED
A	APPROVAL DWG	YMF	05/20/07	
B	REVISED DWG	RAP	11/26/07	
C	REVISED DWG	RAP	12/12/07	
D	REVISED DWG	YMF	07/28/08	
E	REVISED PER_MDBCCD	YMF	01/30/09	
F	REVISED PER_MDBCCD	YMF	02/05/09	
G	REVISED DWG	YMF	01/13/10	
H	REVISED DWG	YMF	04/09/10	

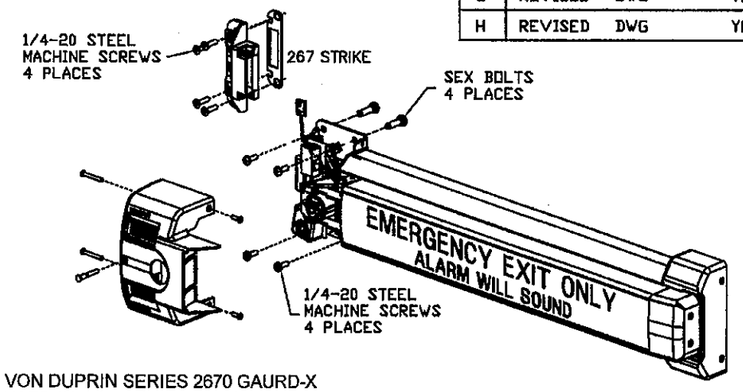

VON DUPRIN SERIES 2670 GAURD-X
USED IN CONFIGURATIONS: 10 & 10A

4/14/10
Gordon Thomas, P.E. Date
3769 Blossom Court
Mason, OH 45040
Florida # 46718

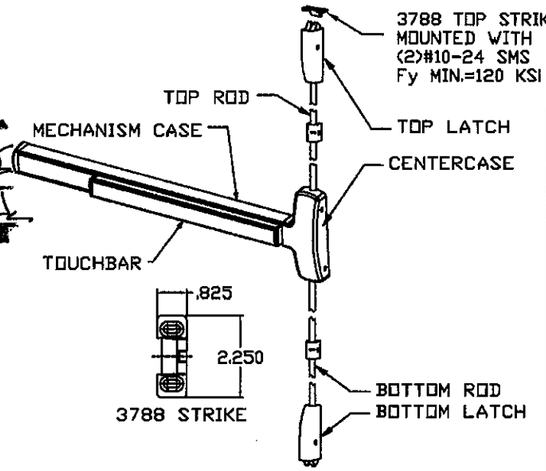

SURFACE VERTICAL ROD EXIT DEVICE
FALCON (F)25-V, USED IN DOOR
CONFIGURATION 3 (SEE SHT.1)

NOTES:

1. ELECTRICAL FUNCTIONS/INSTALLATION IS NOT PART OF THIS APPROVAL, TO BE REVIEWED AND APPROVED BY BUILDING OFFICIAL
2. EXIT HARDWARE OPTIONS:
FOR 98/99 & XP98/99 SERIES - FUNCTIONS E, RX, LX, SS, EL, QEL, CX, F
TRIMS: ALL APPLICABLE TRIMS AVAILABLE.
FOR 88-F SERIES - FUNCTION E
TRIMS: ALL APPLICABLE TRIMS AVAILABLE.
PN MODEL OFFERED.
FOR 33/35-F SERIES - FUNCTIONS RX, LX, EL, QEL, SS
TRIM: ALL APPLICABLE TRIMS AVAILABLE.
FOR 2670 GUARD-X
TRIM: ALL APPLICABLE TRIMS AVAILABLE.
FOR 18-R, F-18-C & 18-V SERIES - FUNCTIONS DL, EA, HWEA, DE, ELR, F, DM, LM, AE, LK, SM
TRIM: ALL APPLICABLE TRIMS AVAILABLE.
F-25-C & (F)25-V SERIES - FUNCTIONS AE, DM, LM, LK, KOR, ED, EL, EA, FSA, FSE, HWEA
TRIMS: ALL APPLICABLE TRIMS AVAILABLE.

BEND RADIUS

THIRD ANGLE PROJECTION

DRAWN	YMF	DATE 05/20/07
CHECKED		
APPROVED		
ENG. APPVL	JPD	11/15/07

Ingersoll Rand
Security Technologies

TITLE MIAMI-DADE PRODUCT APPROVAL

IR HARDWARE OPTIONS FOR GLASS SINGLE DOORS.

SIZE	FLAT	DWG NO.	REV
		IRGS07	H

SCALE: NTS | AUTOCAD | SHEET 10 of 13

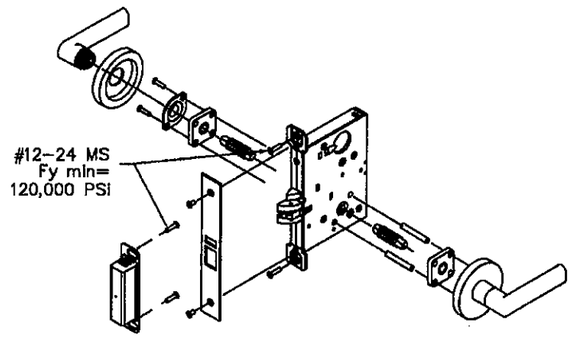

SCHLAGE L/LV 9000 SERIES MORTISE LOCKSET W/O DEADBOLT
3/4" MIN LATCH THROW. USED IN CONFIGURATIONS: 1 & 11

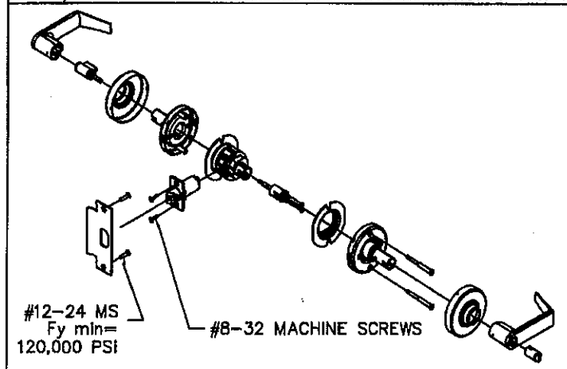

SCHLAGE D/ND-SERIES CYLINDRICAL LEVER LOCKSET
1/2" MIN LATCH THROW. USED IN CONFIGURATIONS: 2 & 12

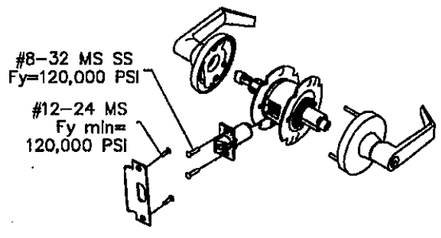

FALCON, T-SERIES CYLINDRICAL LEVER LOCKSET
1/2" MIN LATCH THROW. USED IN CONFIGURATIONS: 2 & 12

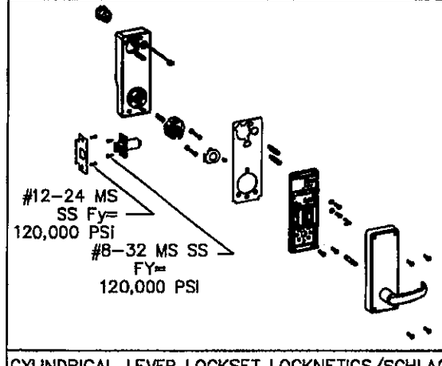

CYLINDRICAL LEVER LOCKSET LOCKNETICS/SCHLAGE 5100 SERIES
1/2" MIN LATCH THROW. USED IN CONFIGURATIONS: 2 & 12

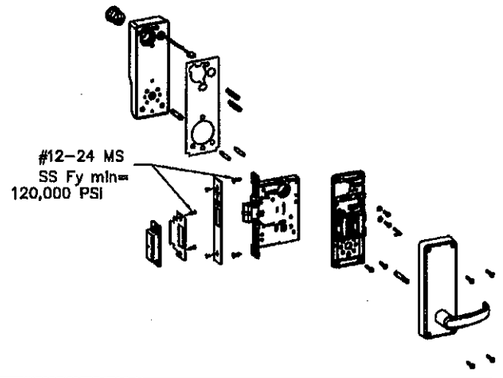

LOCKNETICS/SCHLAGE 5500 SERIES
MORTISE LOCKSET W/ AUTOBOLT (MIN THROW – 3/4")
USED IN CONFIGURATIONS: 1 & 11

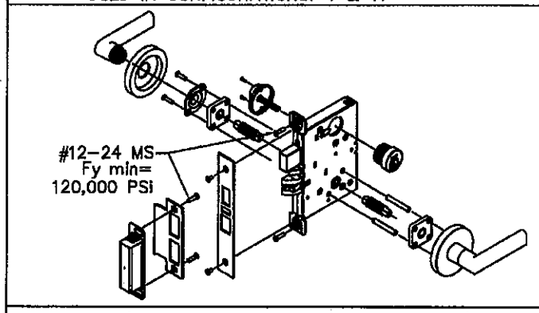

SCHLAGE L/LV 9400 SERIES MORTISE LOCKSET W/ DEADBOLT
LATCH THROW MIN 3/4", BOLT THROW MIN 1"
USED IN CONFIGURATIONS: 1 & 11

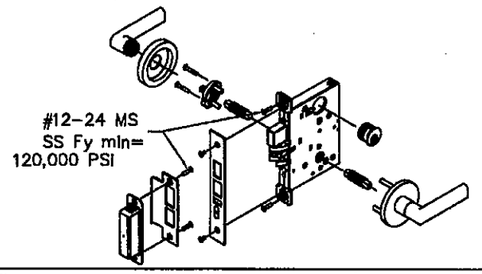

FALCON M-SERIES MORTISE LOCKSET W/ DEADBOLT SHOWN
LATCH THROW MIN 3/4", BOLT THROW MIN 1"
USED IN CONFIGURATIONS: 1 & 11

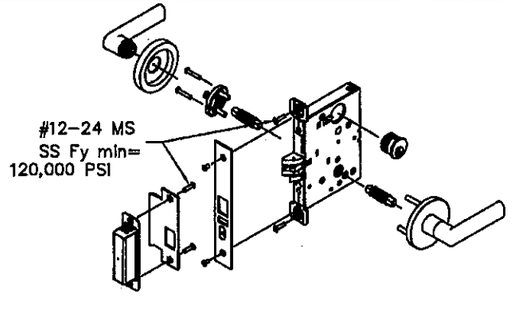

FALCON M-SERIES MORTISE LOCKSET W/O DEADBOLT SHOWN
(MIN THROW – 3/4") USED IN CONFIGURATIONS: 1 & 11

Gordon Thomas, P.E. Date 4/14/10
3759 Blossom Court
Mason, OH 45040
Florida # 46718

ELECTRICAL FUNCTIONS/INSTALLATION IS NOT PART OF THIS APPROVAL, TO BE REVIEWED AND APPROVED BY BUILDING OFFICIAL

PRODUCT REVISED
as complying with the Florida Building Code
Acceptance No 12-0205.15
Expiration Date 5/5/15
By Ishaq I. Chanda
Miami Dade Product Control

PRODUCT RENEWED
as complying with the Florida Building Code
Acceptance No 10-0209.09
Expiration Date MAY 5, 2015
By Ishaq I. Chanda
Miami Dade Product Control Division

REVISIONS					
LTR	DESCRIPTION			DATE	APPROVED
A	APPROVAL	DWG	YMF	05/20/07	
B	REVISED	DWG	RAP	11/26/07	
C	REVISED	DWG	RAP	12/12/07	
D	REVISED	DWG	YMF	07/28/08	
E	REVISED	PER_MDBCCO	YMF	01/30/09	
F	REVISED	PER_MDBCCO	YMF	02/05/09	
G	REVISED	PER_MFR	YMF	05/18/09	
H	REVISED	PER_MDBCCO	YMF	05/18/09	

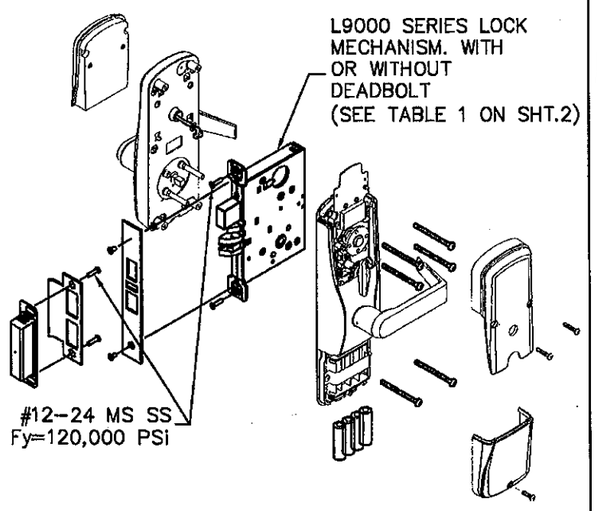

SCHLAGE CO/AD MS SERIES MORTISE LOCKSET
USED IN CONFIGURATIONS: 1 & 11 (SEE SHT. 1)

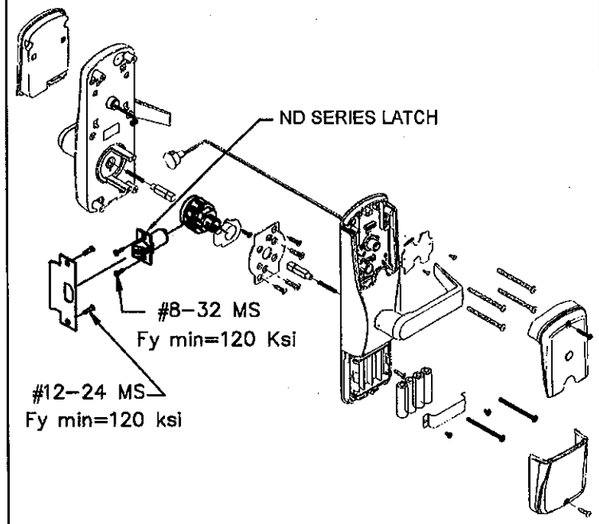

SCHLAGE CO/AD CY SERIES CYLINDRICAL LOCKSET
USED IN CONFIGURATIONS: 2 & 12 (SEE SHT.1)

BEND RADIUS

THIRD ANGLE PROJECTION

DRAWN	YMF	DATE 05/20/07
CHECKED		
APPROVED		
ENG. APPVL	JPD	11/15/07

Ingersoll Rand
Security Technologies

TITLE MIAMI-DADE PRODUCT APPROVAL

IR LOCKSET HARDWARE FOR GLASS SINGLE DOORS

SIZE	FLAT	DWG NO.	REV
		IRGS07	H

SCALE: NTS | AUTOCAD | SHEET 11 of 13

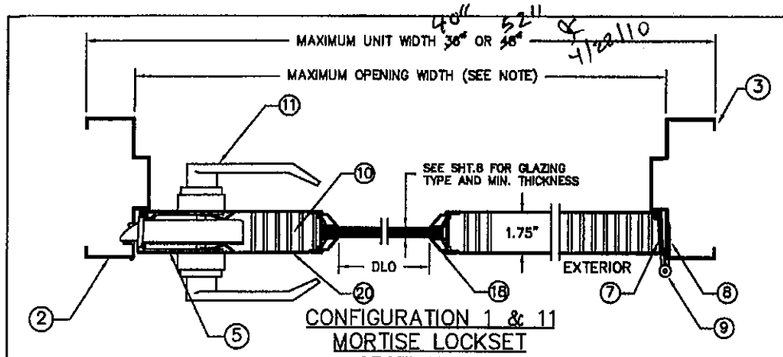

CONFIGURATION 1 & 11
MORTISE LOCKSET
SECTION A–A

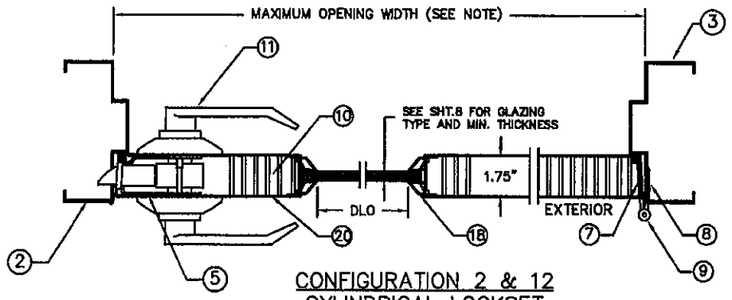

CONFIGURATION 2 & 12
CYLINDRICAL LOCKSET
SECTION A–A

SEE SHEET 4 FOR ANCHOR INSTALLATION DETAILS

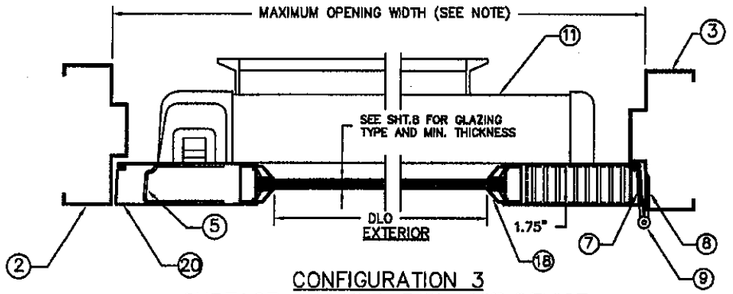

CONFIGURATION 3
SURFACE VERTICAL ROD EXIT DEVICE.
SECTION A–A

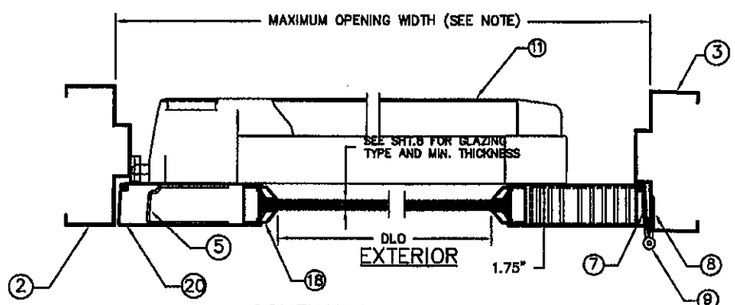

CONFIGURATIONS 10 & 10A
EXIT ALARM LOCK.
SECTION A–A

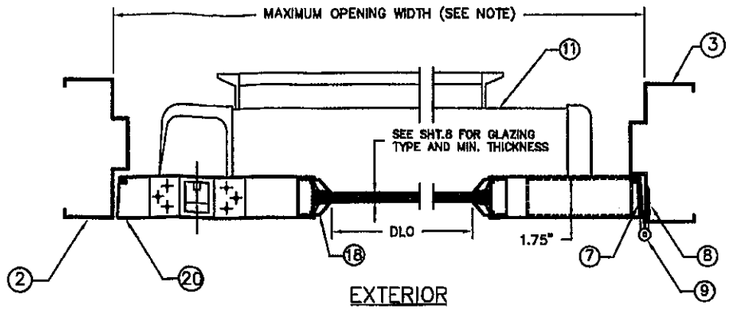

CONFIGURATION 4
CONCEALED VERTICAL ROD EXIT DEVICE.
SECTION A–A

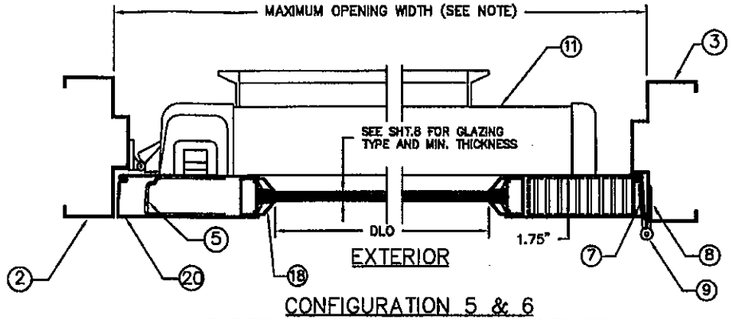

CONFIGURATION 5 & 6
THREE–POINT LATCHING EXIT DEVICE.
SECTION A–A

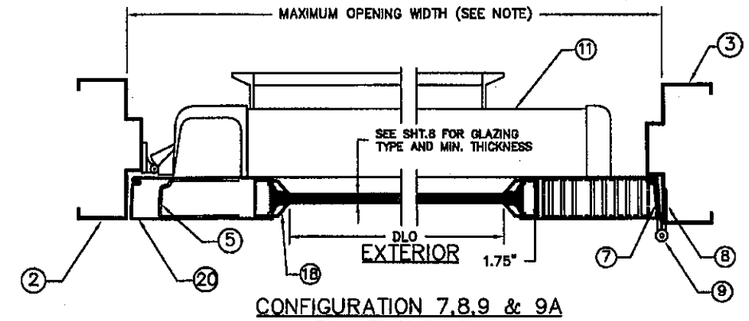

CONFIGURATION 7,8,9 & 9A
RIM EXIT DEVICE.
SECTION A–A

REVISIONS					
LTR	DESCRIPTION			DATE	APPROVED
A	APPROVAL	DWG	YMF	05/20/07	
B	REVISED	DWG	RAP	11/26/07	
C	REVISED	DWG	RAP	12/12/07	
D	REVISED	DWG	YMF	07/28/08	
E	REVISED	PER_MDBCCO	YMF	01/30/09	
F	REVISED	PER_MDBCCO	YMF	02/05/09	
G	REVISED	DWG	YMF	01/05/10	
H	REVISED	DWG	YMF	04/09/10	

PRODUCT REVISED
as complying with the Florida Building Code
Acceptance No 12-0305.15
Expiration Date 5/5/15
By Ishag I. Chand
Miami Dade Product Control

PRODUCT RENEWED
as complying with the Florida Building Code
Acceptance No 10-0209.09
Expiration Date MAY 5, 2015
By Ishag I. Chand
Miami Dade Product Control Division

NOTES:

1. FOR MAXIMUM DOOR OPENING AND GLASS OPENING (DLO) SIZE SEE TABLE 1 ON SHEET 2 OF 13.
2. GLAZING DETAIL K SHOWN, SEE TABLE 8 SHEET 8 OF 13 FOR ADDITIONAL OPTIONS.

Gordon Thomas, P.E.
3759 Blossom Court
Mason, OH 45040
Florida # 46718

4/14/10
Date

BEND RADIUS

THIRD ANGLE PROJECTION

DRAWN YMF	DATE 05/20/07
CHECKED	
APPROVED	
ENG. APPVL JPD	11/15/07

Ingersoll Rand
Security Technologies

TITLE MIAMI–DADE PRODUCT APPROVAL

HORIZONTAL CROSS SECTIONS FOR GLASS SINGLE DOORS.

SIZE	FLAT	DWG NO.	REV
		IRGS07	H

SCALE: NTS | AUTOCAD | SHEET 12 of 13

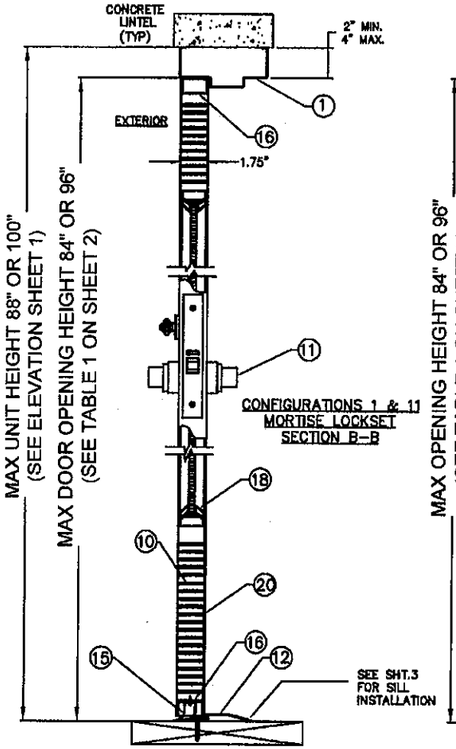

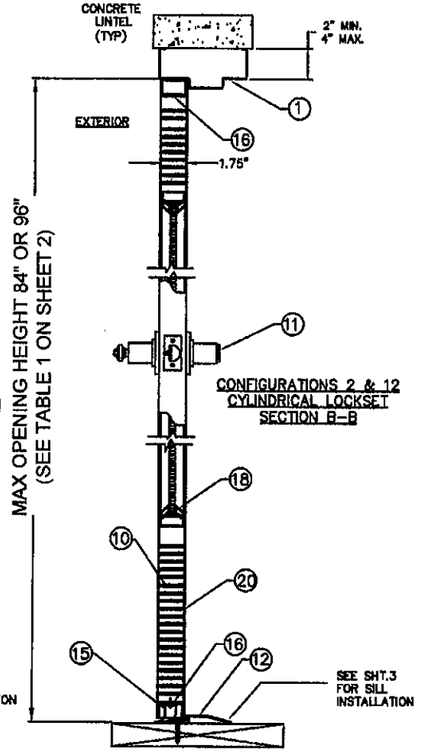

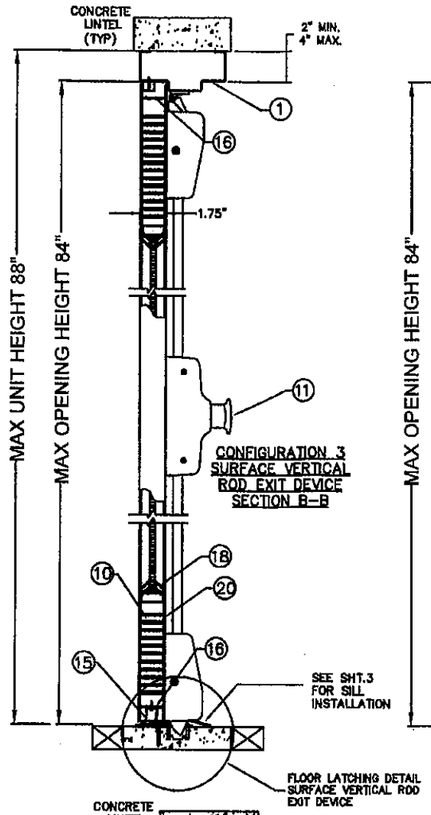

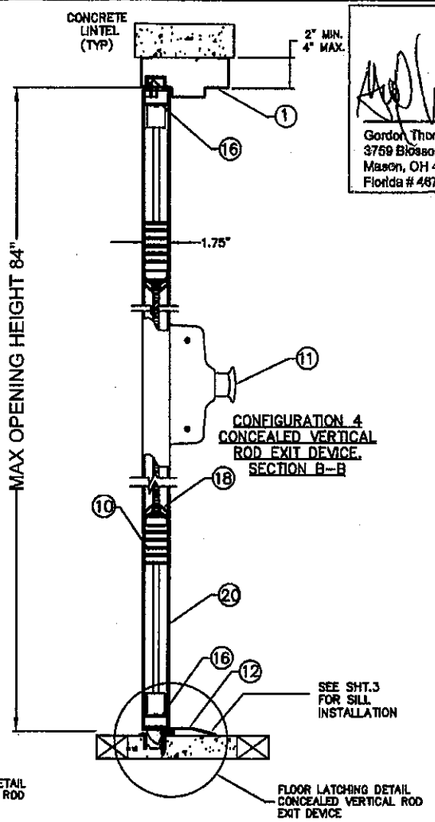

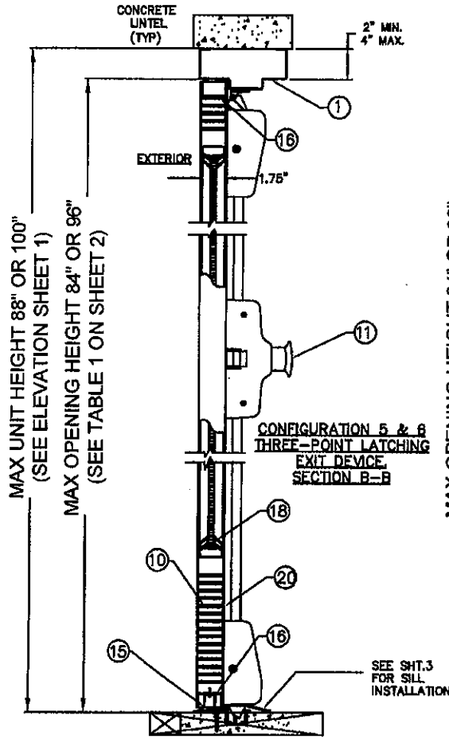

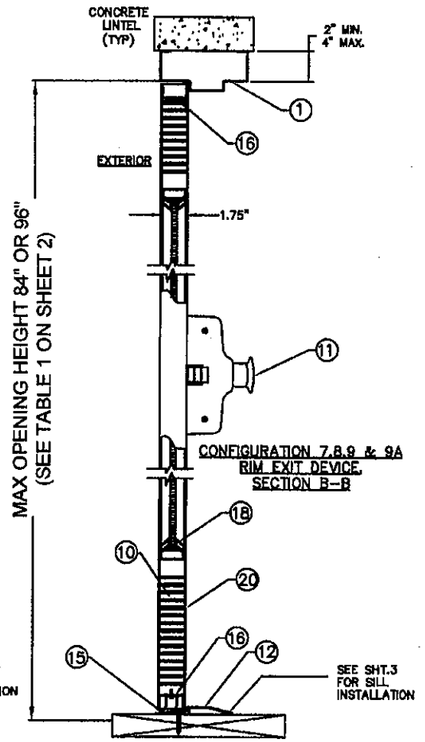

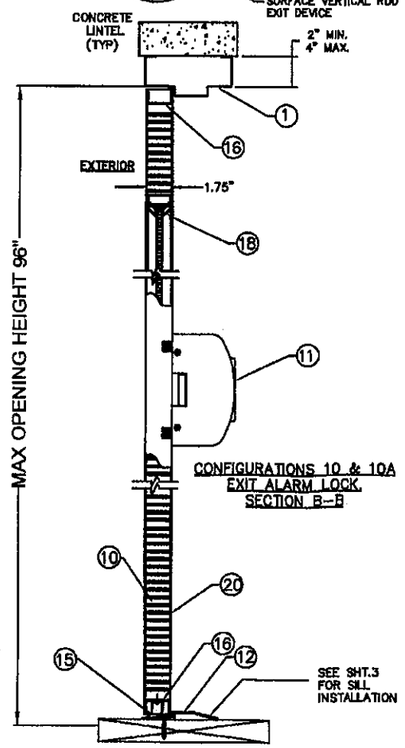

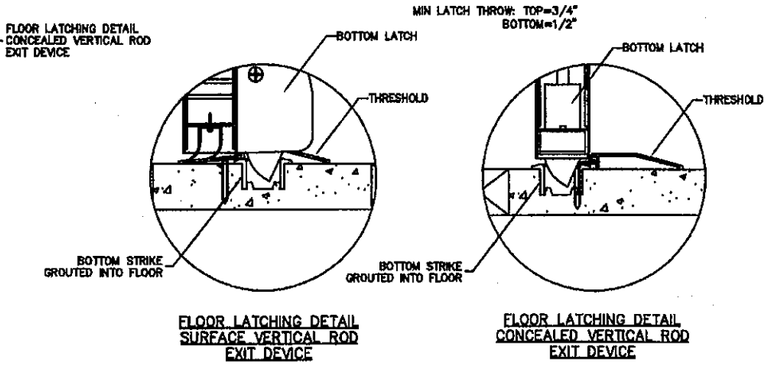

Gordon Thomas, P.E.
3759 Blossom Court
Mason, OH 45040
Florida # 46716
4/14/12
Date

REVISIONS					
LTR	DESCRIPTION			DATE	APPROVED
A	APPROVAL	DWG	YMF	05/20/07	
B	REVISED	DWG	RAP	11/26/07	
C	REVISED	DWG	RAP	12/12/07	
D	REVISED	DWG	YMF	07/28/08	
E	REVISED	PER_MDBCCO	YMF	01/30/09	
F	REVISED	PER_MDBCCO	YMF	02/05/09	
G	REVISED	DWG	YMF	01/05/10	
H	REVISED	DWG	YMF	04/09/10	

PRODUCT REVISED
as complying with the Florida Building Code
Acceptance No. 12-0305.15
Expiration Date 5.5.15
By Ishaq I. Chanda
Miami Dade Product Control

PRODUCT RENEWED
as complying with the Florida Building Code
Acceptance No. 10-0209.09
Expiration Date MAY 5, 2015
By Ishaq I. Chanda
Miami Dade Product Control Division

NOTES:
1. FOR MAXIMUM OPENING SIZE SEE ELEVATION SHEET 1 AND TABLE 1 ON SHEET 2 OF 13.
2. GLAZING DETAIL K SHOWN, SEE TABLE 8 SHEET 8 OF 13 FOR ADDITIONAL OPTIONS.
3. SEE SHEET 4 FOR ANCHORS INSTALLATION DETAILS.

BEND RADIUS
THIRD ANGLE PROJECTION

DRAWN	YMF
DATE	05/20/07
CHECKED	
APPROVED	
ENG. APPVL	JPD
	11/15/07

Ingersoll Rand
Security Technologies

TITLE MIAMI-DADE PRODUCT APPROVAL
VERTICAL CROSS SECTIONS FOR GLASS SINGLE DOORS.

SIZE	FLAT	DWG NO.	REV
		IRGS07	H

SCALE: NTS | AUTOCAD | SHEET 13 of 13