MIAMI-DADE COUNTY
DEPARTMENT OF PERMITTING, ENVIRONMENT, AND REGULATORY AFFAIRS (PERA)
BOARD AND CODE ADMINISTRATION DIVISION

MIAMI-DADE COUNTY
PRODUCT CONTROL SECTION
11805 SW 26 Street, Room 208
Miami, Florida 33175-2474
T (786) 315-2590 F (786) 315-2599
www.miamidade.gov/pera/

NOTICE OF ACCEPTANCE (NOA)

Powers Fasteners, Inc.
2 Powers Lane
Brewster, NY 10509

SCOPE:

This NOA is being issued under the applicable rules and regulations governing the use of construction materials. The documentation submitted has been reviewed and accepted by Miami-Dade County PERA-Product Control Section to be used in Miami Dade County and other areas where allowed by the Authority Having Jurisdiction (AHJ).

This NOA shall not be valid after the expiration date stated below. The Miami-Dade County Product Control Section (In Miami Dade County) and/or the AHJ (in areas other than Miami Dade County) reserve the right to have this product or material tested for quality assurance purposes. If this product or material fails to perform in the accepted manner, the manufacturer will incur the expense of such testing and the AHJ may immediately revoke, modify, or suspend the use of such product or material within their jurisdiction. PERA reserves the right to revoke this acceptance, if it is determined by Miami-Dade County Product Control Section that this product or material fails to meet the requirements of the applicable building code.

This product is approved as described herein, and has been designed to comply with the Florida Building Code, including the High Velocity Hurricane Zone.

DESCRIPTION: Tapper+ Screw Anchor for Concrete and Masonry

APPROVAL DOCUMENT: Drawing No. **POW-TAP+**, titled "Tapper+ Screw Anchor for Concrete and Masonry", Sheets 1 through 3 of 3, dated 04/28/2010, with Rev. 2 dated 02/10/2012, prepared by Powers Fasteners, Inc, signed and sealed by Lee W. Mattis, P.E., bearing the Miami-Dade County Product Control revision stamp with the Notice of Acceptance (NOA) number and expiration date by the Miami-Dade County Product Control Section.

MISSILE IMPACT RATING: None

LABELING: Each box shall bear a permanent label with the manufacturer's name or logo, city, state and following statement: "Miami-Dade County Product Control Approved or MDCPCA", unless otherwise noted herein.

RENEWAL of this NOA shall be considered after a renewal application has been filed and there has been no change in the applicable building code negatively affecting the performance of this product.

TERMINATION of this NOA will occur after the expiration date or if there has been a revision or change in the materials, use, and/or manufacture of the product or process. Misuse of this NOA as an endorsement of any product, for sales, advertising or any other purposes shall automatically terminate this NOA. Failure to comply with any section of this NOA shall be cause for termination and removal of NOA.

ADVERTISEMENT: The NOA number preceded by the words Miami-Dade County, Florida, and followed by the expiration date may be displayed in advertising literature. If any portion of the NOA is displayed, then it shall be done in its entirety.

INSPECTION: A copy of this entire NOA shall be provided to the user by the manufacturer or its distributors and shall be available for inspection at the job site at the request of the Building Official.

This NOA **revises NOA # 10-0505.05** and consists of this page 1, evidence page E-1, as well as approval document mentioned above.

The submitted documentation was reviewed by **Carlos M. Utrera, P.E.**

MIAMI-DADE COUNTY APPROVED

05/30/2012

NOA No: 12-0307.03
Expiration Date: July 28, 2015
Approval Date: June 7, 2012

NOTICE OF ACCEPTANCE: EVIDENCE SUBMITTED

A. DRAWINGS

1. Drawing No. **POW-TAP+**, titled "Tapper+ Screw Anchor for Concrete and Masonry", Sheets 1 through 3 of 3, dated 04/28/2010, with Rev. 2 dated 02/10/2012, prepared by Powers Fasteners, Inc, signed and sealed by Lee W. Mattis, P.E.

B. TESTS *"Submitted under NOA # 10-0505.05"*

1. Test report on Tension and Shear Capacity of 3/16" and 1/4" diameter Tapper+ screw anchors on concrete per ASTM E 488 and ACI 355.2, prepared by CEL Consulting, Test Report No. **9R178**, dated 12/24/2009, signed and sealed by Lee W. Mattis, P.E.
2. Test report on Tension and Shear Capacity of 3/16" and 1/4" diameter anchors on masonry per ASTM E 488 and ACI 355.2, prepared by CEL Consulting, Test Report No. **9R188**, dated 04/16/2010, signed and sealed by Lee W. Mattis, P.E.
3. Test report on Corrosion Resistance of Tapper+ Concrete Screws per ASTM G 85, Annex 5 and TAS 114, Appendix E, prepared by Stork Twin City Testing Corporation, Test Report No. **30160 09-07480.5**, dated 11/16/2009, signed and sealed by Tom Kolden, P.E.

C. CALCULATIONS

1. None.

D. MATERIAL CERTIFICATIONS

1. None.

E. QUALITY ASSURANCE

1. Miami-Dade Department of Permitting, Environment, and Regulatory Affairs (PERA)

F. STATEMENTS

1. Statement letter of code conformance to 2010 FBC issued by CEL Consulting, dated 03/02/2012, signed and sealed by Lee W. Mattis, P.E.

   "Submitted under NOA # 10-0505.05"

2. Code Compliance with FBC 2007 and no financial interest letter issued by CEL Consulting, dated 04/30/2010, signed and sealed by Lee W. Mattis, P.E.

05/30/2012

Carlos M. Utrera, P.E.
Product Control Examiner
NOA No 12-0307.03
Expiration Date: July 28, 2015
Approval Date: June 7, 2012

General Notes:

1. These product evaluation documents represents Powers Fasteners' Tapper+ concrete screw anchors analyzed and tested in accordance with the High Velocity Hurricane Zone provisions of the Florida Building Code, 2007 Edition with 2009 Supplements, and the provisions of Chapter 19 of the Florida Building Code, 2010 Edition.
2. Powers Tapper+ is a corrosion resistant fastener available in Perma-Seal coated carbon steel, in various colors. Reference tables for appropriate design values.
3. Powers Tapper+ is available with a Flange Hex Head, Slotted Hex Washer Head, and Phillips or Trim Flat Head.
4. Reference Documents:
   a. CEL Consulting, Test Report No. 9R178, dated December 24, 2009
   b. CEL Consulting, Test Report No. 9R188, dated April 16, 2010
   c. STORK Twin City Testing Corporation, Test Report No. 30160 09-70480.5, dated November 16, 2009.
5. Anchor installation shall be in conformance with the anchor installation specifications by Powers and these evaluation documents.
   a. Drill pilot hole with proper diameter Tapper+ drill bit at least 1/4" deeper than the required embedment depth. Anchors must be installed in holes drilled using carbide-tipped masonry drill bits (Tapper+ bit) supplied by Powers Fasteners. The nominal Tapper+ bit diameter must be equal to the nominal anchor size.
   b. Blow the hole clean of dust and other material using a hand pump, compressed air or a vacuum.
   c. The anchor must be driven into the predrilled hole using a Tapper 1000 installation tool (Tapper 1000 socket for hex head version and Tapper 1000 socket with phillips bit tip for flat head version).
   d. Insert the head of the Tapper+ into the driver, set the drill to rotation only, and place the point of the Tapper+ through the fixture into the predrilled hole.
   e. Drive the anchor in one steady continuous motion until the minimum nominal embedment depth is achieved and the anchor is properly seated against the fixture. The driver will automatically disengage from the head of the Tapper+.

POWERS TAPPER+ SCREW ANCHOR INSTALLATION SPECIFICATIONS IN CONCRETE[1]

Anchor Property / Setting Information	Symbol	Units	Nominal Anchor Size	
			3/16 inch	1/4 inch
Nominal outside anchor diameter	d_o	in. (mm)	0.145 (3.7)	0.185 (4.7)
Nominal drill bit diameter	d_{bit}	in.	3/16 Tapper+ bit	1/4 Tapper+ bit
Tapper+ bit tolerance range	-	in.	0.170 to 0.176	0.202 to 0.207
Nominal embedment depth	h_{nom}	in. (mm)	1 3/4 (44)	1 3/4 (44)
Effective embedment	h_{ef}	in. (mm)	1.23 (32.2)	1.23 (32.2)
Minimum member thickness	h_{min}	in. (mm)	3 1/4 (83)	3 1/4 (83)
Critical edge distance	c_{ac}	in. (mm)	3 (76)	3 (76)
Minimum edge distance	c_{min}	in. (mm)	1 3/4 (44)	1 3/4 (44)
Minimum spacing distance	s_{min}	in. (mm)	1 (25)	2 (51)
Minimum hole depth	h_o	in. (mm)	2 (51)	2 (51)
Minimum overall anchor length[2]	ℓ_{anch}	in. (mm)	2 1/4 (57)	2 1/4 (57)
Hex head wrench/socket size	d_h	in.	1/4	5/16
Hex head Height	-	in.	7/64	9/64
Phillips flat head bit tip size	-	No.	2	3

For SI: 1 inch = 25.4 mm, 1 ft-lb = 1.356 N-m.

[1]The information presented in this table is to be used in conjunction with the design criteria of ACI 318 Appendix D.

[2]The listed minimum overall anchor length is based on anchor sizes commercially available at the time of publication compared with the requirements to achieve the minimum nominal embedment depth and consideration of a fixture attachment. See the anchor detail for hex head installation guidelines; flat head versions of the Tapper+ are measured from the top of the head to the tip of the anchor.

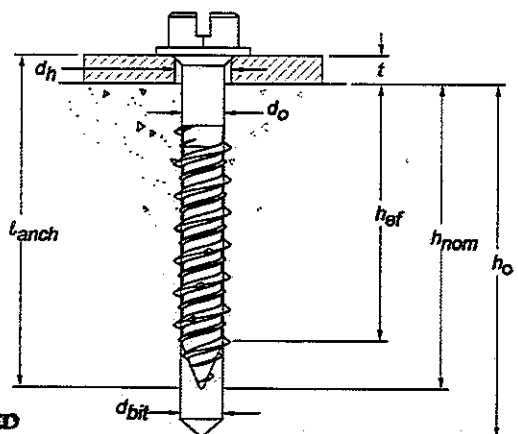

TAPPER+ ANCHOR DETAIL
(hex head version pictured)

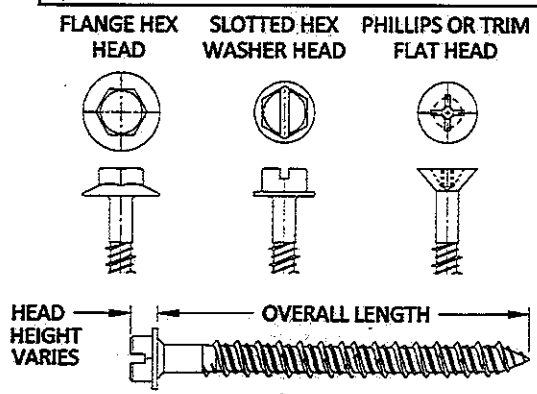

Note: Flat head versions of the Tapper+ are measured from the top of the head to the tip of the anchor.

Lee W. Mattis 2/10/12

LEE W. MATTIS
LICENSE
No. 47767
STATE OF
FLORIDA
PROFESSIONAL ENGINEER

PRODUCT REVISED
as complying with the Florida Building Code
Acceptance No 12-0307.03
Expiration Date 07/28/2015
By _____
Miami Dade Product Control

Tapper+ Screw Anchor for Concrete and Masonry
Powers Fasteners, Inc.

Powers FASTENERS
2 Powers Lane
Brewster, NY 10509
Tel: (800) 524-3244
Fax: (914) 576-6483

REVISIONS

NO	DATE	BY	DESCRIPTION
1	6/11/10	NFC	NOA Comments
2	2/10/12	LM	Added compliance to 2010 FBC to General Note 1.

Scale: AS NOTED
drawn by: NFC
Date: 04/28/2010
Drawing no. POW-TAP+
Sheet 1 of 3

TENSION DESIGN INFORMATION FOR POWERS TAPPER+ ANCHORS IN CONCRETE
(For use with load combinations taken from ACI 318, Section 9.2)[1,2]

Design Characteristic	Notation	Units	Nominal Anchor Size (in.)	
			3/16 inch	1/4 inch
Anchor category	1, 2 or 3	-	1	1
Nominal embedment depth	h_{nom}	in. (mm)	1 3/4 (44)	1 3/4 (44)
STEEL STRENGTH IN TENSION[4]				
Minimum specified ultimate strength	f_{uta}	ksi (N/mm²)	100.0 (14.5)	100.0 (14.5)
Effective tensile stress area	A_{se}	in² (mm²)	0.0162 (10.5)	0.0268 (17.3)
Steel strength in tension	N_{sa}	lb (kN)	1,620 (7.2)	2,680 (11.9)
Reduction factor for steel strength[3]	ϕ	-	0.65	
CONCRETE BREAKOUT IN TENSION[7]				
Effective embedment	h_{ef}	in. (mm)	1.23 (32)	1.23 (32)
Effectiveness factor for uncracked concrete	k_{uncr}	-	24	24
Modification factor for cracked and uncracked concrete[5]	$\psi_{c,N}$	-	1.0 See note 5	1.0 See note 5
Critical edge distance	c_{ac}	in. (mm)	3 (76)	3 (76)
Reduction factor for concrete breakout strength[3]	ϕ	-	0.65 (Condition B)	
PULLOUT STRENGTH IN TENSION[7]				
Characteristic pullout strength, uncracked concrete (2,500 psi)[6]	$N_{p,uncr}$	lb (kN)	635 (2.8)	940 (4.2)
Reduction factor for pullout strength[3]	ϕ	-	0.65 (Condition B)	

For SI: 1 inch = 25.4 mm, 1 ksi = 6.894 N/mm², 1 lbf = 0.0044 kN.

[1]The data in this table is intended to be used with the design provisions of ACI 318 Appendix D.

[2]Installation must comply with published instructions and details.

[3]All values of ϕ were determined from the load combinations of ACI 318 Section 9.2. If the load combinations of ACI 318 Appendix C are used, the appropriate value of ϕ must be determined in accordance with ACI 318 D.4.5. For reinforcement that meets ACI 318 Appendix D requirements for Condition A, see ACI 318 D.4.4 for the appropriate ϕ factor.

[4]The Tapper+ anchor is considered a brittle steel element as defined by ACI 318 D.1. Tabulated values for steel strength in tension must be used for design.

[5]For all design cases use $\psi_{c,N}$ = 1.0. The appropriate effectiveness factor for uncracked concrete (k_{uncr}) must be used.

[6]For all design cases use $\psi_{c,P}$ = 1.0. For calculation of the nominal pullout strength, N_{pn}, the value in uncracked concrete can be adjusted using the following equation: $N_{pn,c} = \left(\frac{f'_c}{2{,}500}\right)^n N_{p,uncr}$ (lb, psi) where f'_c is the specified concrete compressive strength and whereby the exponent n = 0.3 for 3/16-inch-diameter anchors and n = 0.4 for 1/4-inch-diameter anchors.

[7]Anchors are permitted to be used in structural sand-lightweight concrete provided the values of N_b and $N_{p,uncr}$ are multiplied by 0.6, in lieu of ACI 318 D.3.4

[8]The minimum root diameter for the 3/16-inch Tapper+ screw is 0.125", and the root diameter for the 1/4-inch Tapper+ is 0.168"

SHEAR DESIGN INFORMATION FOR POWERS TAPPER+ ANCHORS IN CONCRETE
(For use with load combinations taken from ACI 318, Section 9.2)[1,2]

Design Characteristic	Notation	Units	Nominal Anchor Size (in.)	
			3/16 inch	1/4 inch
Anchor category	1, 2 or 3	-	1	1
Nominal embedment depth	h_{nom}	in. (mm)	1 3/4 (44)	1 3/4 (44)
STEEL STRENGTH IN SHEAR[4]				
Steel strength in shear[5]	V_{sa}	lb (kN)	810 (3.6)	1,180 (5.3)
Reduction factor for steel strength[3]	ϕ	-	0.60	
CONCRETE BREAKOUT IN SHEAR[6]				
Load bearing length of anchor (h_{ef} or $8d_o$, whichever is less)	ℓ_e	in. (mm)	1.23 (32)	1.23 (32)
Nominal outside anchor diameter	d_o	in. (mm)	0.145 (3.7)	0.185 (4.7)
Reduction factor for concrete breakout strength[3]	ϕ	-	0.70 (Condition B)	
PRYOUT STRENGTH IN SHEAR[6]				
Coefficient for pryout strength (1.0 for h_{ef} < 2.5 in, 2.0 for h_{ef} ≥ 2.5 in)	k_{cp}	-	1.0	1.0
Effective embedment	h_{ef}	in. (mm)	1.23 (32)	1.23 (32)
Reduction factor for pryout strength[3]	ϕ	-	0.70 (Condition B)	

For SI: 1 inch = 25.4 mm, 1 lbf = 0.0044 kN.

[1]The data in this table is intended to be used with the design provisions of ACI 318 Appendix D.

[2]Installation must comply with published instructions and details.

[3]All values of ϕ were determined from the load combinations of ACI 318 Section 9.2. If the load combinations of ACI 318 Appendix C are used, the appropriate value of ϕ must be determined in accordance with ACI 318 D.4.5. For reinforcement that meets ACI 318 Appendix D requirements for Condition A, see ACI 318 D.4.4 for the appropriate ϕ factor.

[4]The Tapper+ anchor is considered a brittle steel element as defined by ACI 318 D.1.

[5]Tabulated values for steel strength in shear must be used for design.

[6]Anchors are permitted to be used in structural sand-lightweight concrete provided the value of V_b is multiplied by 0.6, in lieu of ACI 318 D.3.4.

Length ID marking on screw head			A	B	C	D	E	F	G	H	I	J
Overall anchor length, ℓ_{anch}, (inches)	From	1	1 1/2	2	2 1/2	3	3 1/2	4	4 1/2	5	5 1/2	6
	Up to but not including	1 1/2	2	2 1/2	3	3 1/2	4	4 1/2	5	5 1/2	6	6 1/2

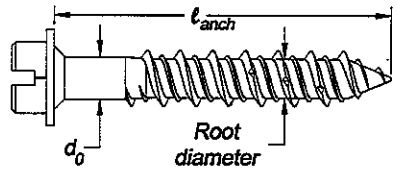

Note: Flat head versions of the Tapper+ are measured from the top of the head to the tip of the anchor. See tension table Note 8 for root diameters.

PRODUCT REVISED
as complying with the Florida Building Code
Acceptance No 12-0307.03
Expiration Date 07/28/2015
By [illegible]
Miami Dade Product Control

Tapper+ Screw Anchor for Concrete and Masonry
Powers Fasteners, Inc.

2 Powers Lane
Brewster, NY 10509
Tel: (800) 524-3244
Fax: (914) 576-6483

Powers FASTENERS

REVISIONS

NO	DATE	BY	DESCRIPTION
1	6/11/10	NFC	NOA Comments

Scale: AS NOTED
drawn by: NFC
Date: 04/28/2010
Drawing no. POW-TAP+
Sheet 2 of 3

ALLOWABLE LOAD CAPACITIES FOR TAPPER+ ANCHORS INSTALLED INTO THE FACE OF GROUT FILLED CONCRETE MASONRY[1,2,3,4]

Anchor Diameter *d* in. (mm)	Minimum Embed. h_v in. (mm)	Minimum Edge Distance in. (mm)	Minimum End Distance in. (mm)	Direction of Loading	f'_m=1,500 psi Tension lbs. (kN)	f'_m=1,500 psi Shear lbs. (kN)	f'_m=2,000 psi Tension lbs. (kN)	f'_m=2,000 psi Shear lbs. (kN)
3/16 (4.8)	1-1/2 (38.1)	3 (76.2)	3 (76.2)	Parallel to wall end towards edge	80 (0.4)	120 (0.5)	95 (0.4)	140 (0.6)
		3 (76.2)	3 (76.2)	Parallel to edge towards end		130 (0.6)		150 (0.7)
1/4 (6.4)	1-1/2 (38.1)	3 (76.2)	3 (76.2)	Parallel to wall end towards edge	130 (0.7)	200 (0.9)	150 (0.7)	230 (1.0)
		4 (1001.6)	3 (76.2)	Parallel to edge towards end				

1. Tabulated load values are for anchors installed in minimum 6" wide, lightweight concrete masonry units conforming to ASTM C90 that have reached the minimum designated ultimate compressive strength at the time of installation. Mortar must be Type N, S or M.
2. Allowable load capacities listed are calculated using an applied safety factor of 5.0. Consideration of safety factors of 10 or higher may be necessary depending on the application, such as life safety or overhead.
3. The tabulated values for the 3/16 inch diameter Tapper+ are applicable for anchors installed at a critical spacing between anchors of 16 times the anchor diameter. The anchors may be reduced to a minimum spacing distance of 8 times the anchor diameter provided the allowable tension loads are reduced by 20 percent, and the allowable shear loads are reduced by 5 percent. Linear interpolation may be used for intermediate spacings.
4. The tabulated values for the 1/4 inch diameter Tapper+ are applicable for anchors installed at a critical spacing between anchors of 8 times the anchor diameter.

PRODUCT REVISED
as complying with the Florida Building Code
Acceptance No 12-0307.03
Expiration Date 07/28/2015
By
Miami/Dade Product Control

ALLOWABLE LOAD CAPACITIES FOR TAPPER+ ANCHORS INSTALLED INTO THE FACE OF UNGROUTED CONCRETE MASONRY[1,2]

Anchor Diameter *d* in. (mm)	Minimum Embed. h_v in. (mm)	Minimum Edge Distance in. (mm)	Minimum End Distance in. (mm)	Direction of Loading	Tension lbs. (kN)	Shear lbs. (kN)
3/16 (4.8)	1 (25.4)	3 (76.2)	3 (76.2)	Any Direction	85 (0.4)	135 (0.6)
1/4 (6.4)	1 (25.4)	3 (76.2)	3 (76.2)		115 (0.5)	165 (0.7)

1. Tabulated load values are for anchors installed in minimum 8" wide, lightweight concrete masonry units conforming to ASTM C90. Mortar must be Type N, S or M.
2. Allowable load capacities listed are calculated using an applied safety factor of 5.0. Consideration of safety factors of 10 or higher may be necessary depending on the application, such as life safety or overhead.

ALLOWABLE LOAD CAPACITIES FOR TAPPER+ ANCHORS INSTALLED INTO THE TOP OF GROUT FILLED CONCRETE MASONRY WALLS[1,2]

Anchor Diameter *d* in. (mm)	Minimum Embed. h_v in. (mm)	Minimum Edge Distance in. (mm)	Minimum End Distance in. (mm)	Direction of Loading	f'_m=1,500 psi Tension lbs. (kN)	f'_m=1,500 psi Shear lbs. (kN)	f'_m=2,000 psi Tension lbs. (kN)	f'_m=2,000 psi Shear lbs. (kN)
3/16 (4.8)	1-1/2 (38.1)	1-1/2 (38.1)	3 (76.2)	Any Direction	90 (0.4)	100 (0.4)	105 (0.5)	115 (0.5)
1/4 (6.4)	1-1/2 (38.1)	1-1/2 (38.1)	3 (76.2)		165 (0.7)	155 (0.7)	190 (0.8)	180 (0.8)

1. Tabulated load values are for anchors installed in minimum 6" wide, lightweight concrete masonry units conforming to ASTM C90 that have reached the minimum designated ultimate compressive strength at the time of installation. Mortar must be Type N, S or M.
2. Allowable load capacities listed are calculated using an applied safety factor of 5.0. Consideration of safety factors of 10 or higher may be necessary depending on the application, such as life safety or overhead.

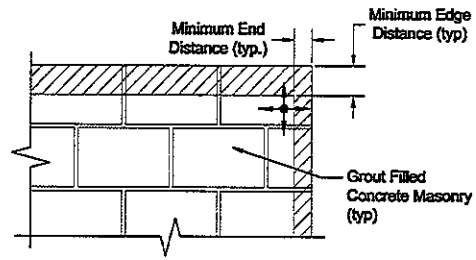

Face Shell
Grout Filled Concrete Masonry Wall
Permissible Anchor Locations
(Un-hatched Area / Through Face Shell / Not in Mortar Joint)

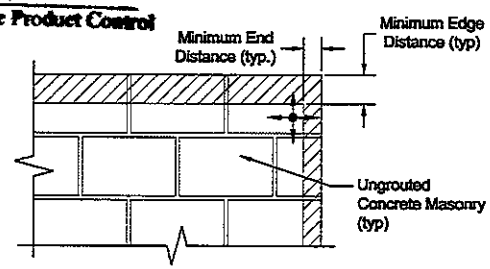

Face Shell
Ungrouted Concrete Masonry
Permissible Anchor Locations
(Un-hatched Area / Through Face Shell / Not in Mortar Joint)

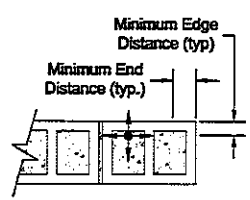

Top of Grout Filled Concrete Masonry Wall

Tapper+ Screw Anchor for Concrete and Masonry
Powers Fasteners, Inc.

2 Powers Lane
Brewster, NY 10509
Tel: (800) 524-3244
Fax: (914) 576-6483

REVISIONS

NO	DATE	BY	DESCRIPTION
1	6/11/10	NFC	NOA Comments

Scale: AS NOTED
drawn by: NFC
Date: 04/28/2010
Drawing no. POW-TAP+
Sheet 3 of 3