MIAMI-DADE COUNTY
DEPARTMENT OF PERMITTING, ENVIRONMENT, AND REGULATORY AFFAIRS (PERA)
BOARD AND CODE ADMINISTRATION DIVISION

MIAMI-DADE COUNTY
PRODUCT CONTROL SECTION
11805 SW 26 Street, Room 208
Miami, Florida 33175-2474
T (786) 315-2590 F (786) 315-2599
www.miamidade.gov/pera/

NOTICE OF ACCEPTANCE (NOA)

Construction Specialties, Inc.
49 Meeker Avenue
Cranford, NJ 07016

SCOPE:

This NOA is being issued under the applicable rules and regulations governing the use of construction materials. The documentation submitted has been reviewed and accepted by Miami-Dade County PERA-Product Control Section to be used in Miami Dade County and other areas where allowed by the Authority Having Jurisdiction (AHJ).

This NOA shall not be valid after the expiration date stated below. The Miami-Dade County Product Control Section (In Miami Dade County) and/or the AHJ (in areas other than Miami Dade County) reserve the right to have this product or material tested for quality assurance purposes. If this product or material fails to perform in the accepted manner, the manufacturer will incur the expense of such testing and the AHJ may immediately revoke, modify, or suspend the use of such product or material within their jurisdiction. PERA reserves the right to revoke this acceptance, if it is determined by Miami-Dade County Product Control Section that this product or material fails to meet the requirements of the applicable building code.

This product is approved as described herein, and has been designed to comply with the Florida Building Code, including the High Velocity Hurricane Zone.

DESCRIPTION: Series 7000 Aluminum Louvers

APPROVAL DOCUMENT: Drawing No. **RD-104**, titled "Louver System" Sheets 1 through 9 of 9, dated 01/29/2001, prepared by Construction Specialties, Inc., signed and sealed by L. David Rice, P.E., bearing the Miami-Dade County Product Control renewal stamp with the Notice of Acceptance number and expiration date by the Miami-Dade County Product Control Section.

MISSILE IMPACT RATING: Large and Small Missile Impact Resistant

LABELING: Each unit shall bear a permanent label with the manufacturer's name or logo, city, state, model/series, and following statement: "Miami-Dade County Product Control Approved", unless otherwise noted herein.

LIMITATION: Operating motor is not part of this approval. It must be certified by an independent testing agency, if required.

RENEWAL of this NOA shall be considered after a renewal application has been filed and there has been no change in the applicable building code negatively affecting the performance of this product.

TERMINATION of this NOA will occur after the expiration date or if there has been a revision or change in the materials, use, and/or manufacture of the product or process. Misuse of this NOA as an endorsement of any product, for sales, advertising or any other purposes shall automatically terminate this NOA. Failure to comply with any section of this NOA shall be cause for termination and removal of NOA.

ADVERTISEMENT: The NOA number preceded by the words Miami-Dade County, Florida, and followed by the expiration date may be displayed in advertising literature. If any portion of the NOA is displayed, then it shall be done in its entirety.

INSPECTION: A copy of this entire NOA shall be provided to the user by the manufacturer or its distributors and shall be available for inspection at the job site at the request of the Building Official.

This NOA **renews NOA # 11-0211.02** and consists of this page 1 and evidence page E-1, as well as approval document mentioned above.

The submitted documentation was reviewed by **Carlos M. Utrera, P.E.**

MIAMI-DADE COUNTY APPROVED

05/22/2012

NOTICE OF ACCEPTANCE: EVIDENCE SUBMITTED

A. DRAWINGS

1. Drawing No. **RD-104**, titled "Louver System" Sheets 1 through 9 of 9, dated 01/29/2001, prepared by Construction Specialties, Inc., signed and sealed by L. David Rice, P.E.

B. TESTS

1. Test reports on: 1) Uniform Static Air Pressure Test, Loading per FBC TAS 202-94
   2) Large Missile Impact Test per FBC, TAS 201-94
   3) Cyclic Wind Pressure Loading per FBC, TAS 203-94

   along with marked-up drawings and installation diagram of a Series 7000 Aluminum Louver", prepared by Architectural Testing, Inc., Report No. **A9746.01-109-18**, dated 02/01/2012, signed and sealed by Michael D. Stremmel, P.E.

   "Submitted under NOA # 00-1107.03"

2. Test report on Large Missile Impact Test per PA 201, Cyclic wind Pressure Test per PA 203 and Uniform Static Air Pressure Test per PA 202 and Wind Driven Rain Test per PA100(A) of "Twin Operable Aluminum Louver" prepared by Architectural Testing Inc, Report No.**01-36644.01**, dated 10/20/2000, signed and sealed by A. N. Reeves, P.E.
3. Test report on Calibration Test of Wind Generator and Water Supply for PA 100(A) report No. **01-36644.02** prepared by Architectural Testing Inc dated 10/18/2000 signed and sealed by A. N. Reeves, P.E
4. Test report on Large Missile Impact Test per PA 201, Cyclic wind Pressure Test per PA 203 and Uniform Static Air Pressure Test per PA 202 of "Twin Fixed Aluminum Louver and Fixed Panel System" prepared by Architectural Testing Inc, Report No.**01-36644.03**, dated 10/20/2000, signed and sealed by A. N. Reeves, P.E.

C. CALCULATIONS

1. Louver anchor calculations prepared by Rice Engineering, dated 02/27/2012, signed and sealed by L. David Rice, P.E.

D. QUALITY ASSURANCE

1. Miami-Dade Department of Permitting, Environment, and Regulatory Affairs (PERA)

E. MATERIAL CERTIFICATIONS

1. None.

F. STATEMENTS

1. Statement letter of code conformance to 2010 FBC, issued by Rice Engineering, dated 05/22/2012, signed and sealed by L. David Rice, P.E.
2. No financial interest letter, issued by Rice Engineering, dated 02/27/2012, signed and sealed by L. David Rice, P.E.

05/22/2012

Carlos M. Utrera, P.E.
Product Control Examiner
NOA No. 12-0308.28
Expiration Date: May 10, 2016
Approval Date: May 31, 2012

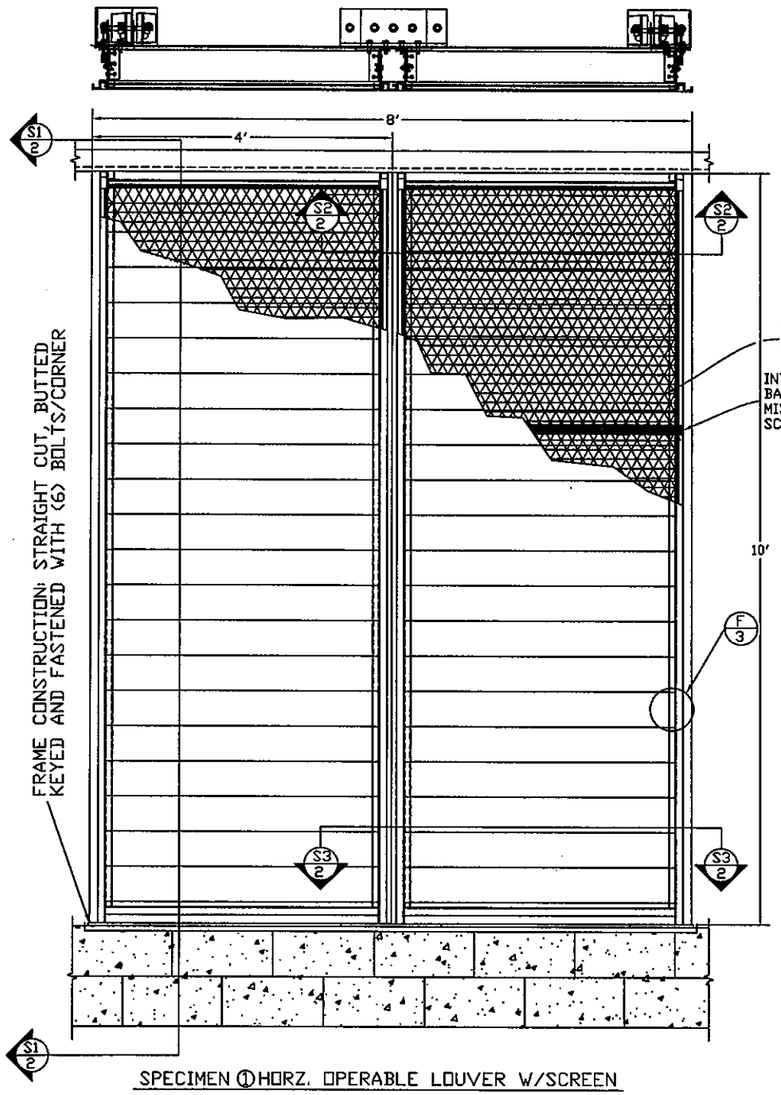

SPECIMEN ① HORZ. OPERABLE LOUVER W/SCREEN

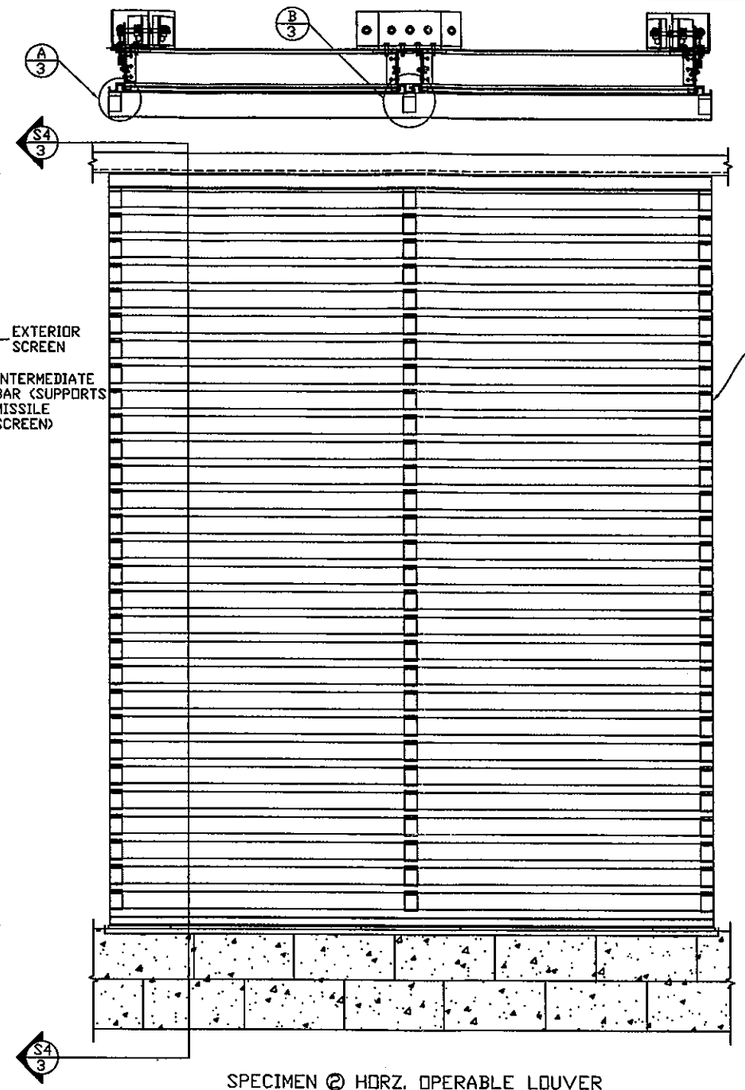

SPECIMEN ② HORZ. OPERABLE LOUVER WITH FIXED STANDARD LOUVER BLADE

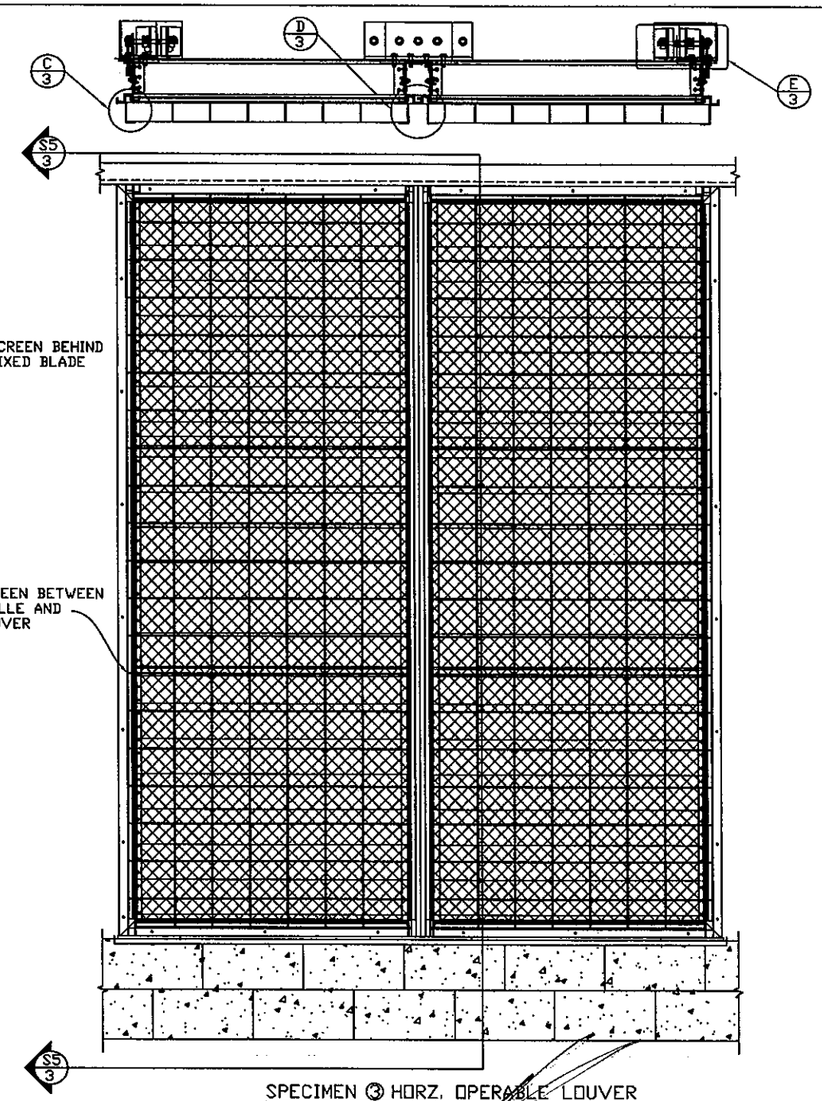

SPECIMEN ③ HORZ. OPERABLE LOUVER WITH GRILLE

GENERAL NOTES:

1) MAXIMUM ALLOWABLE INDIVIDUAL PANEL SIZE WITHOUT ADDITIONAL SUPPORTS = 48" X 120"
2) MAXIMUM ASSEMBLY SIZE = UNLIMITED WIDTH, LIMITED BY 10' MULLIONS EVERY 48" UP TO 120" HEIGHT WITHOUT ADDITIONAL SUPPORTS
3) ASSEMBLIES/SECTIONS MAY BE STACKED VERTICALLY OR HEIGHTS MAY EXCEEED 120" PROVIDING A STRUCTURAL SUPPORT IS DESIGNED AND INSTALLED BY OTHERS TO SUPPORT ALL LOADS TRANSFERRED FROM THE LOUVER ASSEMBLY.
4) MAXIMUM UNSUPPORTED BLADE LENGTH SHALL NOT EXCEED 48"
5) ALL FASTENERS SHALL BE STAINLESS STEEL OR PLATED STEEL
6) SEPARATION OF DISSIMILAR MATERIALS MUST BE MAINTAINED PER THE FLORIDA BUILDING CODE.
7) APPROVED TYPE OF OPENINGS = 2000 PSI CONCRETE/ MASONRY OR STEEL.
8) THESE LOUVER SYSTEMS HAVE BEEN TESTED, ANALYZED AND APPROVED FOR DESIGN PRESSURES NOT TO EXCEED 160 PSF.
9) ALL HARDWARE AND FASTENERS SHALL BE IN ACCORDANCE WITH THESE DRAWINGS AND MAY NOT VARY UNLESS SPECIFICALLY MENTIONED ON THESE DRAWINGS.
10) THESE LOUVER SYSTEMS HAVE BEEN DESIGNED IN ACCORDANCE WITH THE FLORIDA BUILDING CODE
11) THIS PRODUCT HAS BEEN TESTED IN ACCORDANCE WITH DADE COUNTY PROTOCOLS TAS-100(A), 201, 202 AND 203 FOR LARGE MISSILE IMPACT, STRUCTURAL AND CYCLIC TESTING.
12) SEAL LOUVER AND PAN TO FRAME. CAULK JOINT BETWEEN PAN AND LOUVER LEAVING 2 PLACES 1/4" LONG 6" FROM EACH JAMB (LOCATED AT 4'-0"O.C.) TO DRAIN WATER FROM PAN

PRODUCT RENEWED
as complying with the Florida Building Code
Acceptance No. 12-0308.28
Expiration Date 05/10/2016
By
Miami Dade Product Control

DESIGN PRESSURE RATING
±160 PSF
LARGE MISSILE IMPACT RESISTANCE

DAMPER REQUIRED ONLY FOR A CLOSED BUILDING APPLICATION

L. DAVID RICE LICENSE No. 50923 STATE OF FLORIDA PROFESSIONAL ENGINEER

FEB 27 2012

RICE ENGINEERING
105 School Creek Trail
Luxemburg, WI 54217
Phone: 920.845 1042
Fax: 920.845 1048
www.rice-inc.com

Florida Firm No: F-01000005061
Certificate of Authorization: #9090
L. David Rice
Registration No: 50923

CONSTRUCTION SPECIALTIES, INC.
49 MEEKER AVENUE, CRANFORD, NEW JERSEY
PHONE: 1-800-631-7379 / FAX: 908-272-2920

DADE COUNTY LOUVER	TITLE: LOUVER SYSTEM
REVISION:	DATE: 1-29-01
SCALE: 1/2" = 1'	SHEET NUM: 1 OF 9
DRW BY: J. BLAKE	DRW NO : RD-104-1

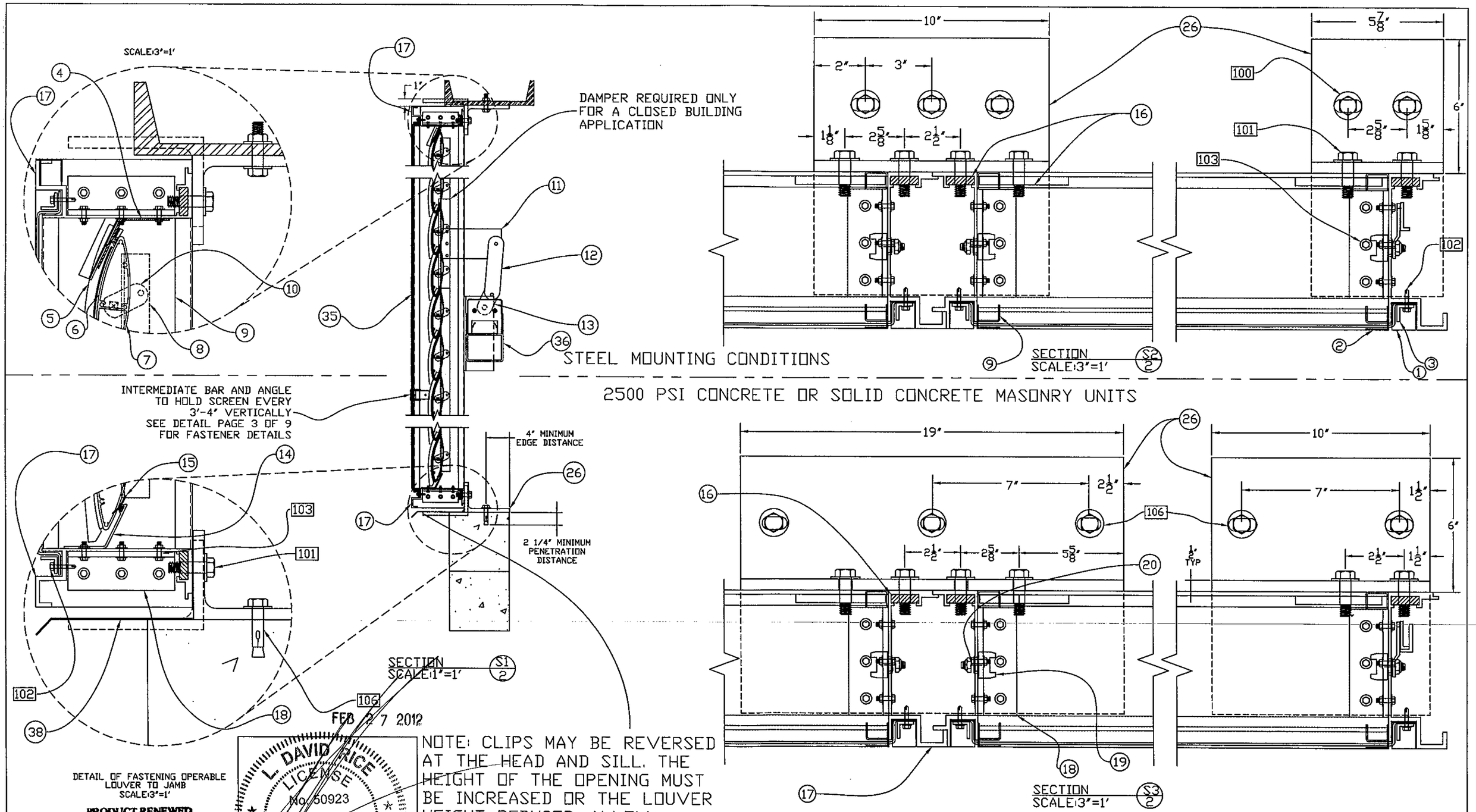
SCALE:3"=1'
DAMPER REQUIRED ONLY FOR A CLOSED BUILDING APPLICATION
STEEL MOUNTING CONDITIONS
SECTION S2/2 SCALE:3"=1'
2500 PSI CONCRETE OR SOLID CONCRETE MASONRY UNITS
INTERMEDIATE BAR AND ANGLE TO HOLD SCREEN EVERY 3'-4' VERTICALLY SEE DETAIL PAGE 3 OF 9 FOR FASTENER DETAILS
4" MINIMUM EDGE DISTANCE
2 1/4" MINIMUM PENETRATION DISTANCE
SECTION S1/2 SCALE:1"=1'
DETAIL OF FASTENING OPERABLE LOUVER TO JAMB SCALE:3"=1'
SECTION S3/2 SCALE:3"=1'
FRAME AND OPERABLE LOUVER MOUNTING DETAILS
NOTE: CLIPS MAY BE REVERSED AT THE HEAD AND SILL. THE HEIGHT OF THE OPENING MUST BE INCREASED OR THE LOUVER HEIGHT REDUCED. ALLOW CLEARANCE OF 1" PER CLIP
PRODUCT RENEWED as complying with the Florida Building Code Acceptance No 12-0308.28 Expiration Date 05/10/2016 By Miami Dade Product Control
FEB 27 2012
L. DAVID RICE LICENSE No. 50923 STATE OF FLORIDA PROFESSIONAL ENGINEER
CONSTRUCTION SPECIALTIES, INC.
49 MEEKER AVENUE, CRANFORD, NEW JERSEY
PHONE: 1-800-631-7379 / FAX: 908-272-2920
DADE COUNTY LOUVER
TITLE: LOUVER SYSTEM
REVISION:
DATE: 1-29-01
SCALE: 1" = 1'
SHEET NUM: 2 OF 9
DRW BY: J. BLAKE
DRW NO: RD-104-2

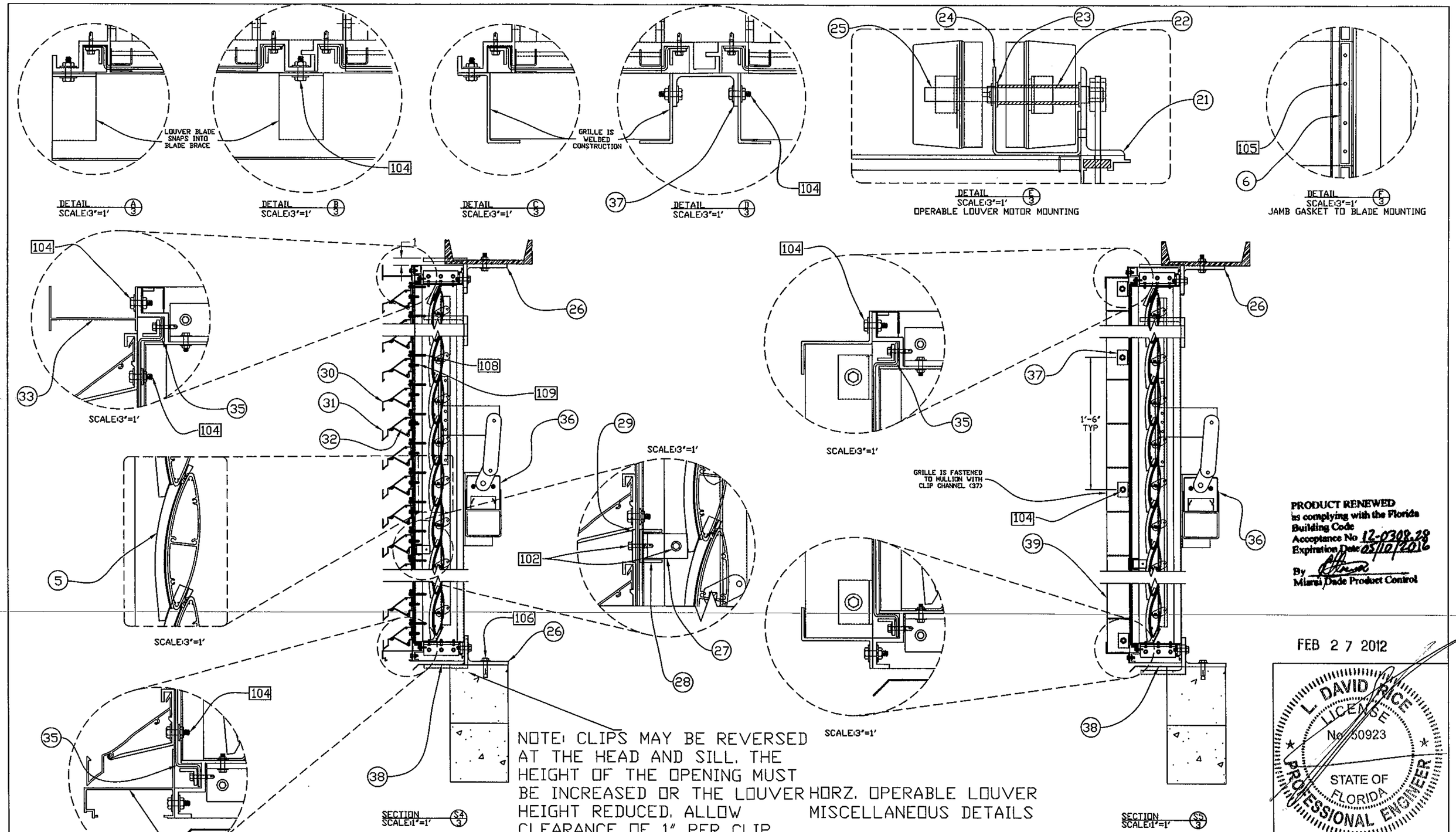
LOUVER BLADE SNAPS INTO BLADE BRACE
104
DETAIL A/3 SCALE:3"=1'
DETAIL B/3 SCALE:3"=1'
GRILLE IS WELDED CONSTRUCTION
DETAIL C/3 SCALE:3"=1'
37
DETAIL D/3 SCALE:3"=1'
25
24
23
22
21
DETAIL E/3 SCALE:3"=1'
OPERABLE LOUVER MOTOR MOUNTING
105
6
DETAIL F/3 SCALE:3"=1'
JAMB GASKET TO BLADE MOUNTING
33
35
SCALE:3"=1'
26
108
109
30
31
32
36
29
5
SCALE:3"=1'
102
27
28
106
38
SECTION S4/3 SCALE:1"=1'
GRILLE IS FASTENED TO MULLION WITH CLIP CHANNEL (37)
39
1'-6" TYP
SECTION S5/3 SCALE:1"=1'
34
NOTE: CLIPS MAY BE REVERSED AT THE HEAD AND SILL. THE HEIGHT OF THE OPENING MUST BE INCREASED OR THE LOUVER HEIGHT REDUCED. ALLOW CLEARANCE OF 1" PER CLIP
HORZ. OPERABLE LOUVER MISCELLANEOUS DETAILS
PRODUCT RENEWED
as complying with the Florida Building Code
Acceptance No 12-0308.28
Expiration Date 03/10/2016
By
Miami Dade Product Control
FEB 27 2012
L. DAVID RICE
LICENSE
No. 50923
STATE OF FLORIDA
PROFESSIONAL ENGINEER
CONSTRUCTION SPECIALTIES, INC.
49 MEEKER AVENUE, CRANFORD, NEW JERSEY
PHONE: 1-800-631-7379 / FAX: 908-272-2920
DADE COUNTY LOUVER
REVISION:
SCALE: 1" = 1'
DRW BY: J. BLAKE
TITLE: LOUVER SYSTEM
DATE: 1-29-01
SHEET NUM: 3 OF 9
DRW NO: RD-104-3

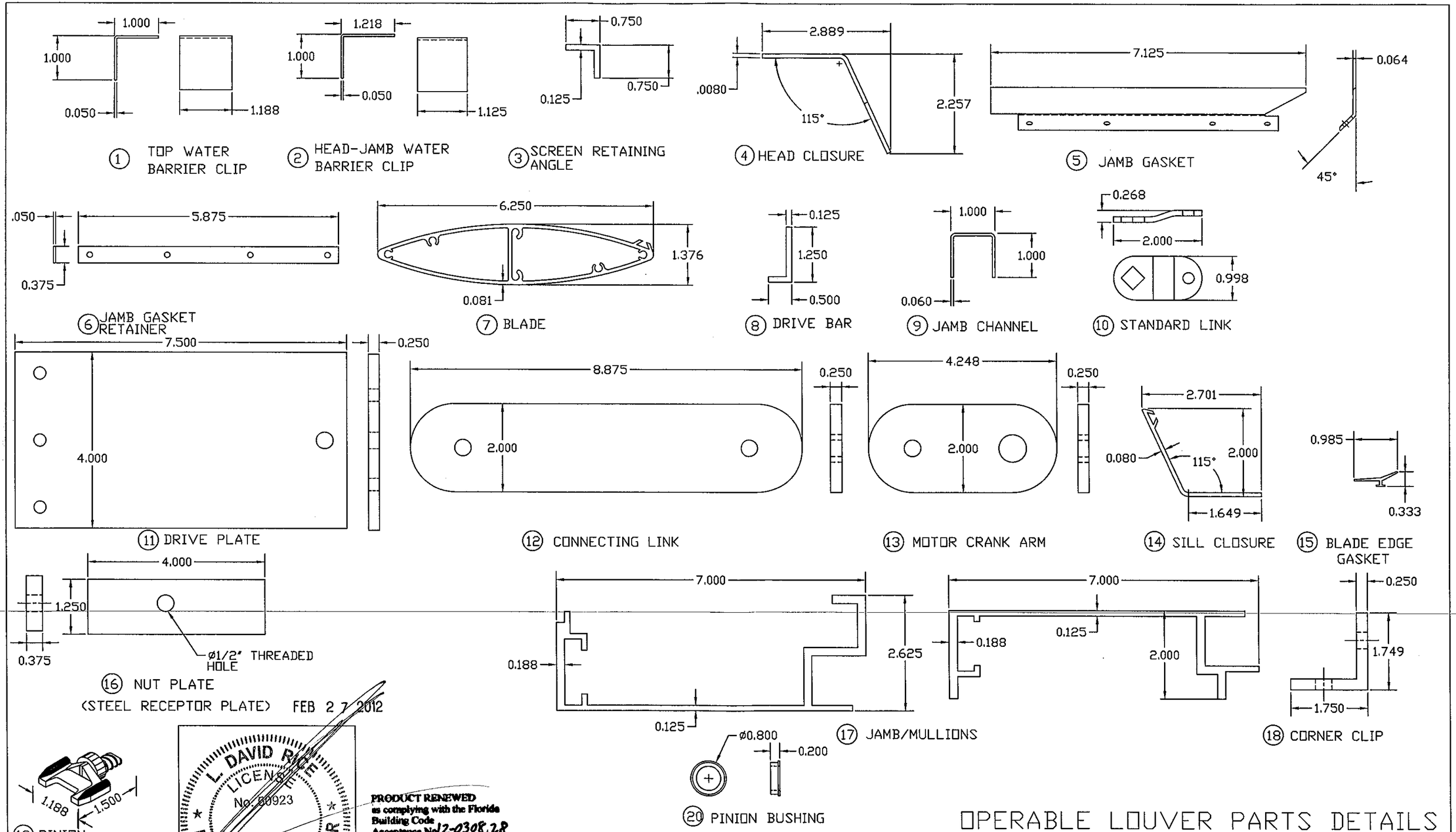

FEB 2 7 2012

L. DAVID RICE
LICENSE
No. 50923
STATE OF FLORIDA
PROFESSIONAL ENGINEER

PRODUCT RENEWED
as complying with the Florida
Building Code
Acceptance No. 12-0308.28
Expiration Date 05/10/2016
By
Miami/Dade Product Control

OPERABLE LOUVER PARTS DETAILS

CONSTRUCTION SPECIALTIES, INC.
49 MEEKER AVENUE, CRANFORD, NEW JERSEY
PHONE: 1-800-631-7379 / FAX: 908-272-2920

PROJECT: DADE COUNTY LOUVER	TITLE: LOUVER SYSTEM
REVISION:	DATE: 1-29-01
SCALE: HALF SCALE	SHEET NUM: 4 OF 9
DRW BY: J. BLAKE	DRW NO : RD-104-4

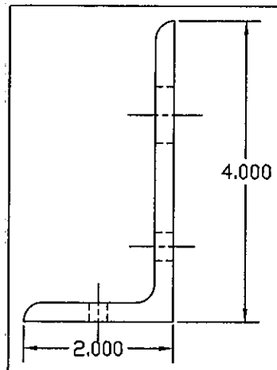

(21) SHAFT BRACKET

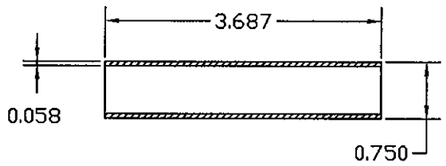

(22) SPACER TUBE

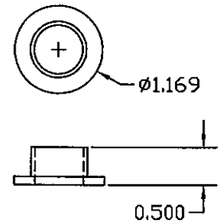

(23) SHAFT BUSHING

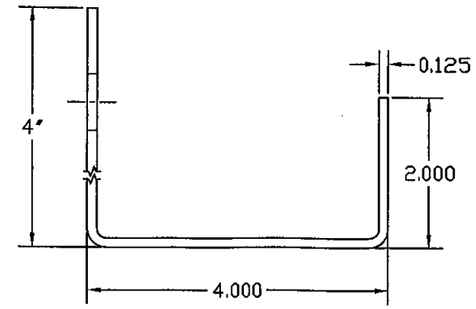

(24) FORMED BRACKET

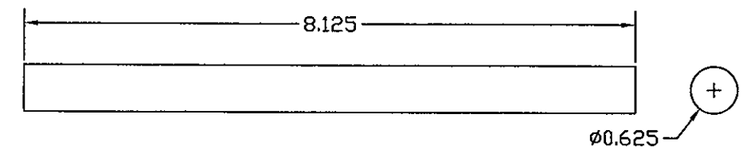

(25) SHAFT

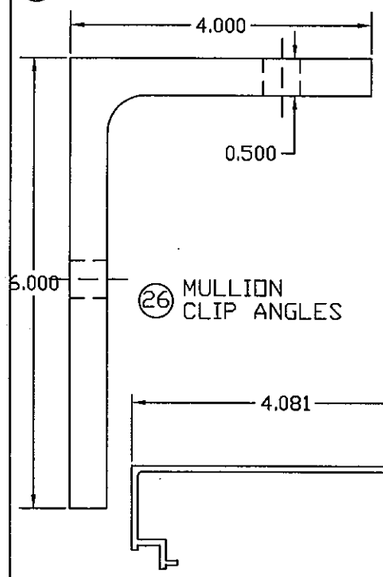

(26) MULLION CLIP ANGLES

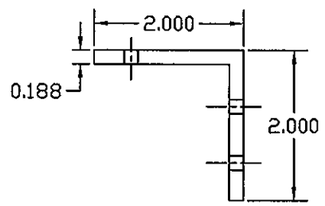

(27) INTERMEDIATE BAR CLIP ANGLE

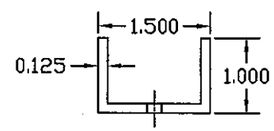

(28) INTERMEDIATE BAR

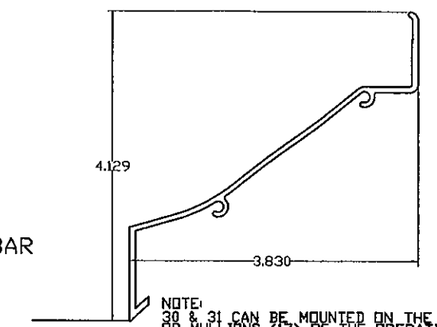

NOTE:
30 & 31 CAN BE MOUNTED ON THE JAMB OR MULLIONS (17) OF THE OPERATING LOUVER OR OF THE VERTICAL LOUVER AND BLANK-OFF MODELS

(30) STANDARD LOUVER BLADE

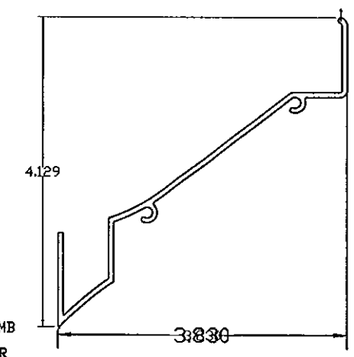

(31) DRAINABLE LOUVER BLADE

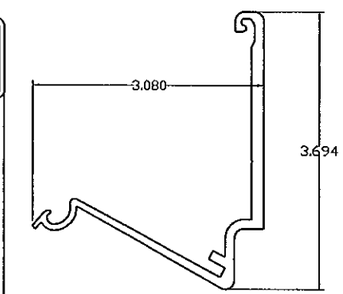

(32) BLADE BRACE

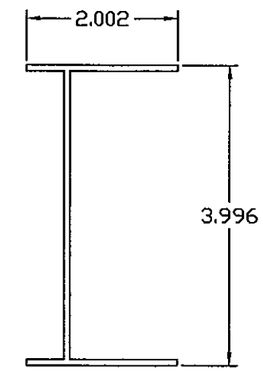

(33) LOUVER HEAD

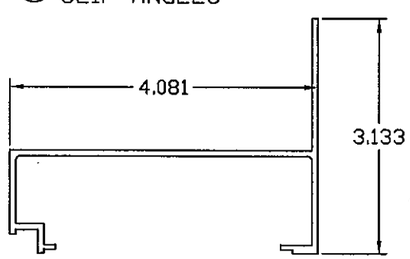

(34) LOUVER SILL

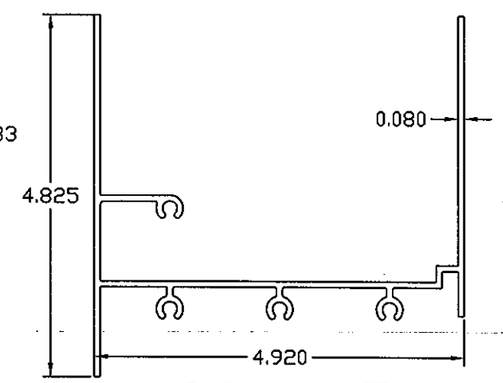

(42) INTERMEDIATE FRAME HEAD/SILL

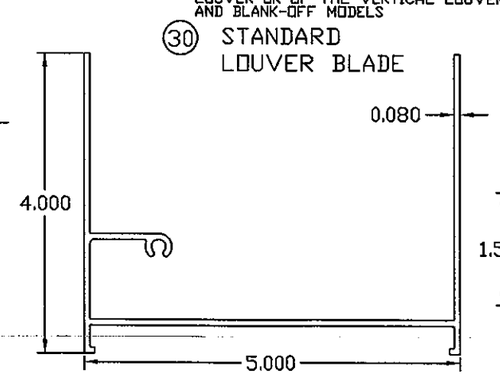

(43) FRAME SILL

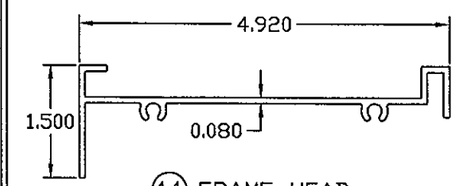

(44) FRAME HEAD

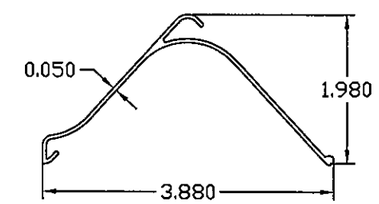

(50) MODULAR LOUVER BLADE

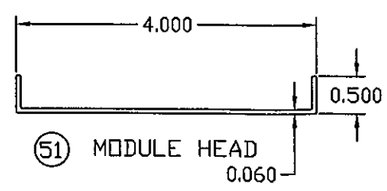

(51) MODULE HEAD

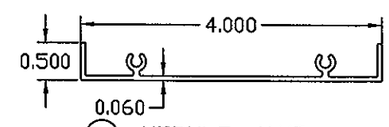

(52) MODULE JAMB

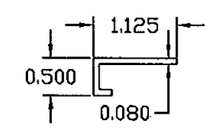

(53) MODULE SILL CLIP

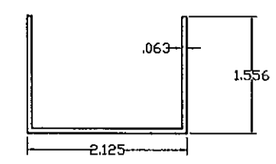

(54) FORMED BLANK-OFF FRAME

LOUVER PARTS DETAILS

FEB 2 7 2012

L. DAVID RIGGS
LICENSE No. 50923
STATE OF FLORIDA
PROFESSIONAL ENGINEER

PRODUCT RENEWED
as complying with the Florida Building Code
Acceptance No 12-0308.28
Expiration Date 05/10/2016
By
Miami Dade Product Control

CONSTRUCTION SPECIALTIES, INC.
49 MEEKER AVENUE, CRANFORD, NEW JERSEY
PHONE: 1-800-631-7379 / FAX: 908-272-2920

PROJECT: DADE COUNTY LOUVER	TITLE: LOUVER SYSTEM
REVISION:	DATE: 1-29-01
SCALE: HALF SCALE	SHEET NUM: 5 OF 9
DRW BY: J. BLAKE	DRW NO : RD-104-5

		PARTS LIST	
1	TOP WATER BARRIER CLIP	6063-T5 ALUMINUM 0.050 THK	
2	HEAD-JAMB WATER BARRIER CLIP	6063-T5 ALUMINUM 0.050 THK	
3	SCREEN RETAINING ANGLE	6063-T5 ALUMINUM 0.125 THK	
4	HEAD CLOSURE	6063-T5 ALUMINUM 0.080 THK	
5	JAMB GASKET	65 DUROMETER FLEXIBLE PVC	
6	JAMB GASKET RETAINER	6063-T5 ALUMINUM 0.050 THK	
7	AIRFOIL BLADE	6063-T5 ALUMINUM 0.080 THK	
8	DRIVE BAR	6063-T5 ALUMINUM 0.125 THK	
9	JAMB CHANNEL	6063-T5 ALUMINUM 0.060 THK	
10	STANDARD LINK	6063-T5 ALUMINUM 0.050 THK	
11	DRIVE PLATE	6063-T5 ALUMINUM 0.250 THK	
12	CONNECTING LINK	6063-T5 ALUMINUM 0.250 THK	NOT REQUIRED FOR PNEUMATIC DRIVE
13	MOTOR CRANK ARM	6063-T5 ALUMINUM 0.250 THK	NOT REQUIRED FOR PNEUMATIC DRIVE
14	SILL CLOSURE	6063-T5 ALUMINUM 0.080 THK	
15	BLADE EDGE GASKET	65 DUROMETER FLEXIBLE PVC	
16	NUT PLATE (STEEL RECEPTOR PLATE)	0.375 THK STAINLESS STEEL	
17	MULLION-JAMB	6063-T5 ALUMINUM	
18	CORNER CLIP	6063-T5 ALUMINUM 0.250 THK	
19	PINION	CAST ZAMAC (ZINC)	
20	PINION BUSHING	NYLON	
21	SHAFT BRACKET	6063-T5 ALUMINUM 0.125 THK	
22	SPACER TUBE	6061-T6 ALUMINUM	
23	SHAFT BUSHING	NYLON	
24	FORMED BRACKET	6063-T5 ALUMINUM 0.125 THK	
25	SHAFT	6061-T6 ALUMINUM	
26	MULLION CLIP ANGLE	6063-T5 ALUMINUM 0.500 THK	
27	INTERMEDIATE BAR CLIP ANGLE	6063-T5 ALUMINUM 0.188 THK	
28	INTERMEDIATE BAR	6063-T5 ALUMINUM 0.125 THK	
29	INTERMEDIATE BAR COVER	6063-T5 ALUMINUM 0.125 THK	
30	STANDARD LOUVER BLADE *	6063-T5 ALUMINUM 0.068 THK	
31	DRAINABLE LOUVER BLADE *	6063-T5 ALUMINUM 0.068 THK	
32	BLADE BRACE	6063-T5 ALUMINUM 0.125 THK	
33	LOUVER HEAD	6063-T5 ALUMINUM 0.080 THK	
34	LOUVER SILL	6063-T5 ALUMINUM 0.080 THK	
35	MISSILE SCREEN	3/4"X3/4" X 0.070" THK 304 STAINLESS STEEL EXPANDED MESH	
36	OPERATING MOTOR	ELECTRIC ACTUATOR OR AIR CYLINDER	
37	GRILLE CLIP CHANNEL	6063-T5 ALUMINUM 0.068 THK X 3" LONG	
38	SILL PAN	6063-T5 ALUMINUM 0.050 THK FORMED AND WELDED ON ENDS	
39	GRILLE	6063-T5 ALUMINUM MINIMUM 0.125" THK 6"x6"x3"x1/8" WELDED BAR GRILLE	
40	4" DEEP LOUVER MODULE	6063-T5 ALUMINUM 0.050" THK BLADES - 0.063" THK FRAME	
41	2" DEEP BLANK-OFF MODULE	.032" THK ALUM SHEET - 0.080" THK FRAME	
42	INTERMEDIATE FRAME HEAD/SILL	6063-T5 ALUMINUM 0.080 THK	
43	FRAME SILL	6063-T5 ALUMINUM 0.080 THK	
44	FRAME HEAD	6063-T5 ALUMINUM 0.080 THK	
45	JAMB MODULE RETAINING ANGLE	6063-T5 ALUMINUM 3/4"X3/4"X1/8" THK	
46	HEAD/SILL BLANK-OFF MODULE RETAINING ANGLE	6063-T5 ALUMINUM 1 1/2"X2 3/8"X3/16" THK	
47	LOUVER HEAD MODULE RETAINING ANGLE	6063-T5 ALUMINUM 1 1/2"X3/4"X3/16" THK	
48	4' X 4' LOUVER CLIP ANGLE	6063-T5 ALUMINUM 2" X 2" X 1/8"	
49	SEALANT CRL33S SILICONE	TO BE USED AS INDICATED ON SHEET 1 OF 9 FOR ALL CLOSED BUILDINGS	
50	MODULE VERTICAL BLADE	6063-T5 ALUMINUM 0.050" THK	
51	MODULE HEAD	6063-T5 ALUMINUM 0.060" THK	
52	MODULE JAMB	6063-T5 ALUMINUM 0.060" THK	
53	MODULE SILL CLIP	6063-T5 ALUMINUM 0.080" THK	
54	BLANK-OFF FRAME	6063-T5 ALUMINUM 0.063" THK	
100	1/2" x 3 1/2" BOLT	WITH FLAT WASHERS, LOCK WASHER AND NUT 2 AT JAMB, 3 AT MULLION (STEEL CONNECTION)	
101	1/2" x 2" BOLT	WITH FLAT WASHERS AND LOCK WASHER 2 AT JAMB, 4 AT MULLION	
102	#10 SD. ST SCREWS	HEX HEAD STAINLESS STEEL- 5 EACH SCREEN RET. ANGLE- 7 EACH INTER. BAR	
103	3/8" X 1 1/2" BOLT	WITH FLAT WSH, LOCK WSH AND NUT 6 SETS FOR EACH CORNER CLIP	
104	1/4"-20 BOLT	WITH FLAT WSH, LOCK WSH AND NUT- 5 EACH HEAD & SILL- 20 EACH GRILLE SEC.	
105	1/8" BLIND POP RIVET	ALUM-ALUM DOME HEAD .188"-.250" GRIP RANGE 8 EACH BLADE	
106	1/2"x3-1/2" HILTI KWIK BOLT 3	3 AT EACH MULLION, 2 AT EACH JAMB (CONCRETE CONNECTION)	
107	#8 SD. ST SCREWS	HEX HEAD STAINLESS STEEL- 4 EACH BLADE	
108	12-24 X 2 SELF DRILLING SCREW*	ELCO BIFLEX SELF DRILLING SCREW WITH NO 5 POINT	
109	1/4- 20 X 1 THREAD CUTTING SCREW*	F POINT SCREW - PILOT HOLE .226 - USE NO 1 DRILL	

L. DAVID MCE
LICENSE
No. 50923
STATE OF FLORIDA
PROFESSIONAL ENGINEER

FEB 2 7 2012

PRODUCT RENEWED
as complying with the Florida Building Code
Acceptance No 12-0308.28
Expiration Date 05/10/2016
By
Miami-Dade Product Control

CONSTRUCTION SPECIALTIES, INC.
49 MEEKER AVENUE, CRANFORD, NEW JERSEY
PHONE: 1-800-631-7379 / FAX: 908-272-2920

PROJECT: DADE COUNTY LOUVER	TITLE: LOUVER SYSTEM
REVISION: *Jan 19, 2012	DATE: 1-29-01
SCALE: HALF SCALE	SHEET NUM: 6 OF 9
DRW BY: J. BLAKE	DRW NO : RD-104-6

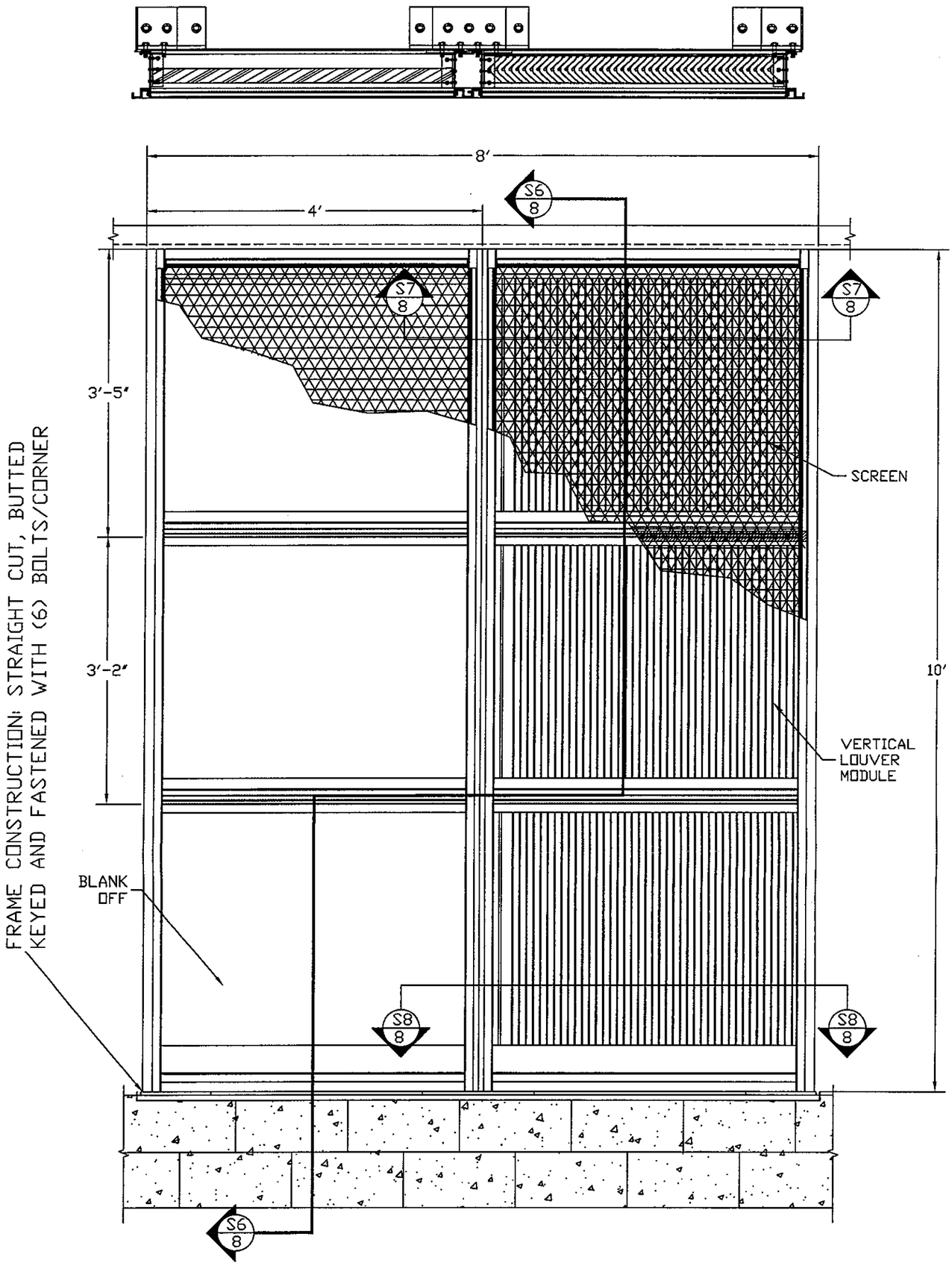

DESIGN PRESSURE RATING
±160 PSF
LARGE MISSILE IMPACT RESISTANCE

SPECIMEN ④

THREE SINGLE VERTICAL LOUVER (48"x36"EA)
THREE SINGLE ALUM. BLANK-OFF (48"x36"EA)

PRODUCT RENEWED
as complying with the Florida
Building Code
Acceptance No 12-0308.28
Expiration Date 03/10/2016
By
Miami Dade Product Control

GENERAL NOTES:

1) MAXIMUM ALLOWABLE INDIVIDUAL PANEL SIZE WITHOUT ADDITIONAL SUPPORTS = 48" X 120"
2) MAXIMUM ASSEMBLY SIZE = UNLIMITED WIDTH LIMITED BY MODULES OF 48"x36", UP TO 120" HEIGHT WITHOUT ADDITIONAL SUPPORTS
3) ASSEMBLIES/SECTIONS MAY BE STACKED VERTICALLY OR HEIGHTS MAY EXCEEED 120" PROVIDING A STRUCTURAL SUPPORT IS DESIGNED AND INSTALLED BY OTHERS TO SUPPORT ALL LOADS TRANSFERRED FROM THE LOUVER ASSEMBLY.
4) MAXIMUM UNSUPPORTED BLADE LENGTH SHALL NOT EXCEED 36"
5) ALL FASTENERS SHALL BE STAINLESS STEEL OR PLATED STEEL
6) SEPARATION OF DISSIMILAR MATERIALS MUST BE MAINTAINED PER SECTION THE FLORIDA BUILDING CODE
7) APPROVED TYPE OF OPENINGS = 2000 PSI CONCRETE/ MASONRY OR STEEL.
8) THESE LOUVER SYSTEMS HAVE BEEN TESTED, ANALYZED AND APPROVED FOR DESIGN PRESSURES NOT TO EXCEED 160 PSF.
9) ALL HARDWARE AND FASTENERS SHALL BE IN ACCORDANCE WITH THESE DRAWINGS AND MAY NOT VARY UNLESS SPECIFICALLY MENTIONED ON THESE DRAWINGS.
10) THESE LOUVER SYSTEMS HAVE BEEN DESIGNED IN ACCORDANCE WITH THE FLORIDA BUILDING CODE.
11) THIS PRODUCT HAS BEEN TESTED IN ACCORDANCE WITH DADE COUNTY PROTOCOLS TAS 201, 202 AND 203 FOR LARGE MISSILE IMPACT, STRUCTURAL AND CYCLIC TESTING.
12) VERTICAL LOUVERS ARE TO BE INSTALLED IN A LOCATION WHERE THE ROOM BEHIND THE LOUVERS ARE DESIGNED TO DRAIN WATER PENETRATING INTO THE ROOM AND THE ROOM WILL HOUSE WATER RESISTANT/WATER PROOF EQUIPMENT

FEB 27 2012

DAVID RICE
LICENSE
No. 65923
STATE OF
FLORIDA
PROFESSIONAL ENGINEER

CONSTRUCTION SPECIALTIES, INC.
49 MEEKER AVENUE, CRANFORD, NEW JERSEY
PHONE: 1-800-631-7379 / FAX: 908-272-2920

DADE COUNTY LOUVER	TITLE: LOUVER SYSTEM
REVISION:	DATE: 1-29-01
SCALE: 3/4" = 1'	SHEET NUM: 7 OF 9
DRW BY: J. BLAKE	DRW NO : RD-104-7

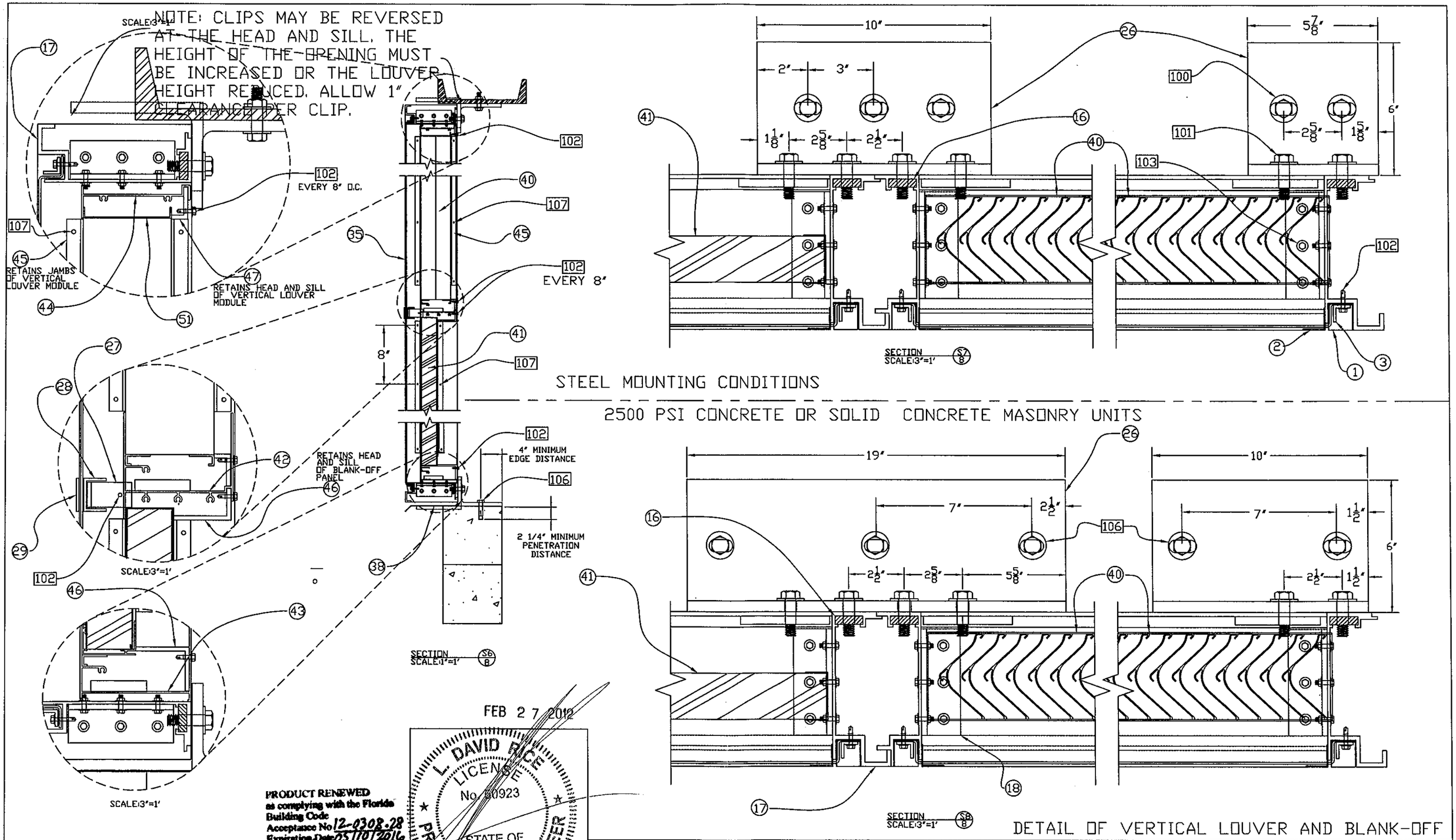

FEB 27 2012

L. DAVID RICE
LICENSE
No. 50923
STATE OF FLORIDA
PROFESSIONAL ENGINEER

PRODUCT RENEWED
as complying with the Florida Building Code
Acceptance No 12-0308.28
Expiration Date 05/10/2016
By
Miami Dade Product Control

CONSTRUCTION SPECIALTIES, INC.
49 MEEKER AVENUE, CRANFORD, NEW JERSEY
PHONE: 1-800-631-7379 / FAX: 908-272-2920

DADE COUNTY LOUVER	TITLE: LOUVER SYSTEM
REVISION:	DATE: 1-29-01
SCALE: 1" = 1'	SHEET NUM: 8 OF 9
DRW BY: J. BLAKE	DRW NO: RD-104-8

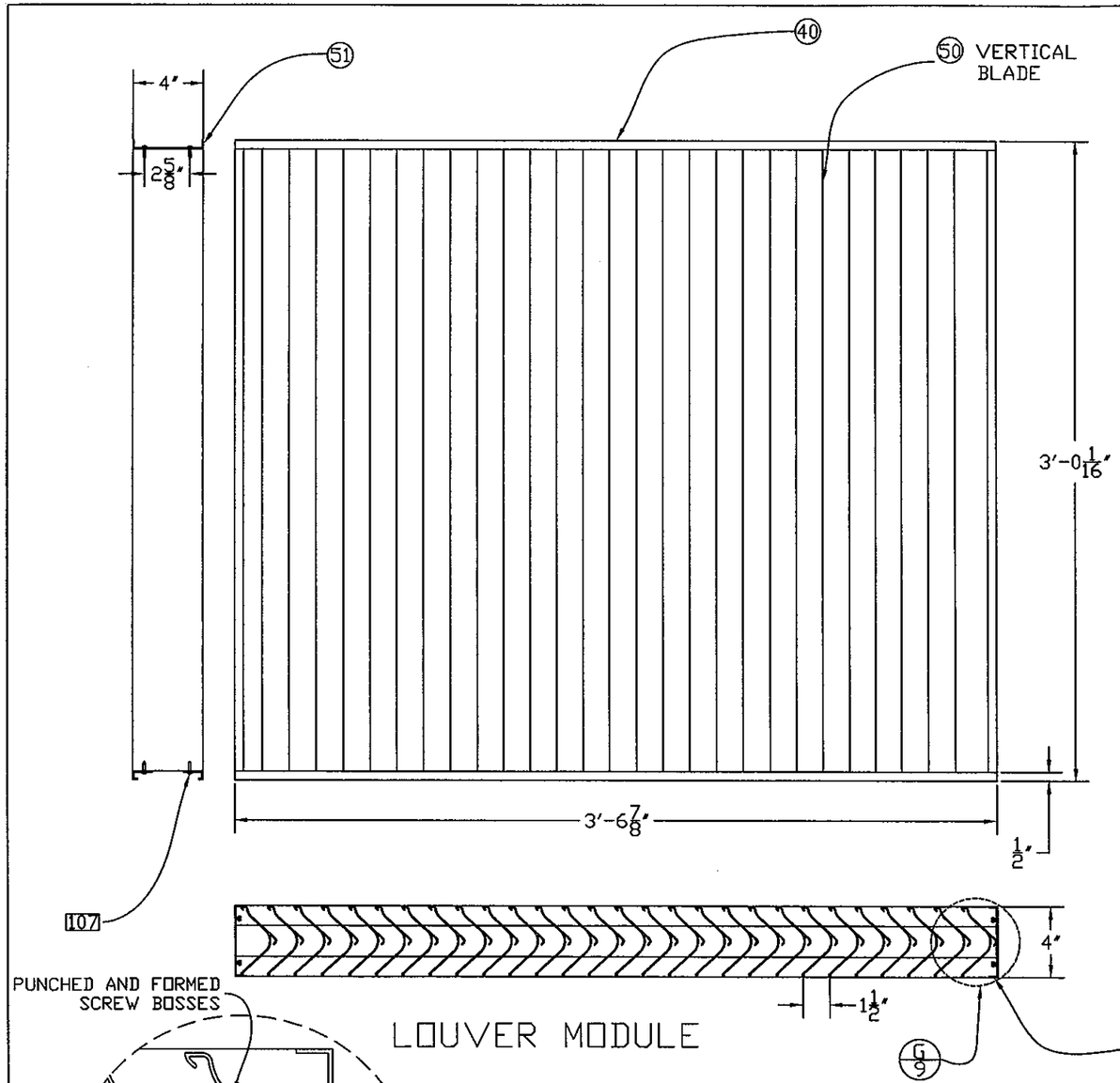

LOUVER MODULE

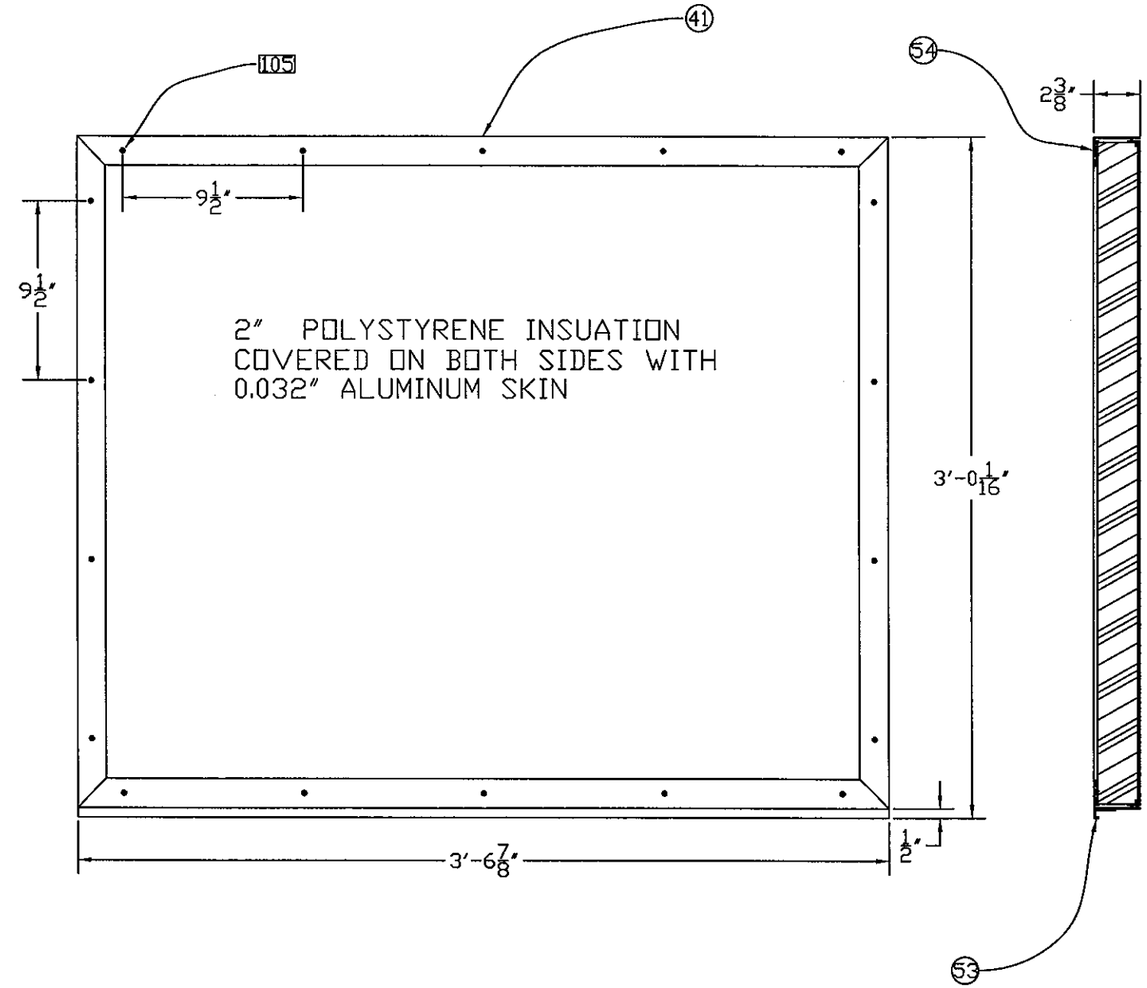

BLANK-OFF MODULE

FEB 2 7 2012

THESE COMPONENTS ONLY WHERE ENHANSED WATER PROTECTION IS REQUIRED

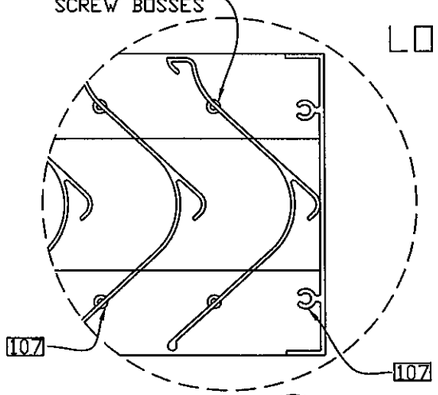

DETAIL G/9
SCALE: FULL

BLADES PUNCHED AND FORMED 1/4" FROM ENDS TO PROVIDE SCREW BOSSES FOR ATTACHMENT (0.4"LG)

PRODUCT RENEWED
as complying with the Florida
Building Code
Acceptance No 12-0308.28
Expiration Date 05/10/2016
By
Miami Dade Product Control

MODULES HELD INTO LOUVER USING CONTINOUS ANGLES (45, 46, 47) AND #8 SCREWS (107) EVERY 8"

DETAIL OF LOUVER AND BLANK-OFF PANEL

L. DAVID RICE
LICENSE
No. 50923
STATE OF FLORIDA
PROFESSIONAL ENGINEER

CONSTRUCTION SPECIALTIES, INC.
49 MEEKER AVENUE, CRANFORD, NEW JERSEY
PHONE: 1-800-631-7379 / FAX: 908-272-2920

PROJECT: DADE COUNTY LOUVER	TITLE: LOUVER SYSTEM
REVISION:	DATE: 2-02-01
SCALE: 1 1/2" = 1'	SHEET NUM: 9 OF 9
DRW BY: J. BLAKE	DRW NO : RD-104-9