MIAMI-DADE COUNTY
DEPARTMENT OF PERMITTING, ENVIRONMENT, AND REGULATORY AFFAIRS (PERA)
BOARD AND CODE ADMINISTRATION DIVISION

NOTICE OF ACCEPTANCE (NOA)

MIAMI-DADE COUNTY
PRODUCT CONTROL SECTION
11805 SW 26 Street, Room 208
Miami, Florida 33175-2474
T (786) 315-2590 F (786) 315-2599
www.miamidade.gov/pera/

Craftsmen In Wood Manufacturing
5441 West Hadley Street
Phoenix, AZ 85043

SCOPE:

This NOA is being issued under the applicable rules and regulations governing the use of construction materials. The documentation submitted has been reviewed and accepted by Miami-Dade County PERA -Product Control Section to be used in Miami Dade County and other areas where allowed by the Authority Having Jurisdiction (AHJ).

This NOA shall not be valid after the expiration date stated below. The Miami-Dade County Product Control Section (In Miami Dade County) and/or the AHJ (in areas other than Miami Dade County) reserve the right to have this product or material tested for quality assurance purposes. If this product or material fails to perform in the accepted manner, the manufacturer will incur the expense of such testing and the AHJ may immediately revoke, modify, or suspend the use of such product or material within their jurisdiction. PERA reserves the right to revoke this acceptance, if it is determined by Miami-Dade County Product Control Section that this product or material fails to meet the requirements of the applicable building code.

This product is approved as described herein, and has been designed to comply with the Florida Building Code, including the High Velocity Hurricane Zone.

DESCRIPTION: Outswing French Wood Doors-LMI

APPROVAL DOCUMENT: Drawing No **11-227 (Rev# 08-011)**, titled "Double & Single Out-swing Glass Entrance Doors", sheets 1 through 14 of 14, dated 12/08/12, prepared by Tilteco Inc., signed and sealed by Walter A. Tillit Jr. P. E., bearing the Miami-Dade County Product Control approval stamp with the Notice of Acceptance number and approval date by the Miami-Dade County Product Control section.

MISSILE IMPACT RATING: Large Missile Impact Resistant

Limitations: 1. Two (2) surface bolts at each active & in-active panels are required.
2. Min head member depth = 5.510" and sill depth = 6.085"
3. Refer to design pressure table for O.C. spacing "S" of the anchors.

LABELING: Each unit shall bear a permanent label with the manufacturer's name or logo, city, state and series and following statement: "Miami-Dade County Product Control Approved", noted herein.

RENEWAL of this NOA shall be considered after a renewal application has been filed and there has been no change in the applicable building code negatively affecting the performance of this product.

TERMINATION of this NOA will occur after the expiration date or if there has been a revision or change in the materials, use, and/or manufacture of the product or process. Misuse of this NOA as an endorsement of any product, for sales, advertising or any other purposes shall automatically terminate this NOA. Failure to comply with any section of this NOA shall be cause for termination and removal of NOA.

ADVERTISEMENT: The NOA number preceded by the words Miami-Dade County, Florida, and followed by the expiration date may be displayed in advertising literature. If any portion of the NOA is displayed, then it shall be done in its entirety.

INSPECTION: A copy of this entire NOA shall be provided to the user by the manufacturer or its distributors and shall be available for inspection at the job site at the request of the Building Official.

This NOA **revises NOA # 08-0423.18** and consists of this page 1 and evidence pages E-1, as well as approval document mentioned above.

The submitted documentation was reviewed by **Ishaq I. Chanda, P.E.**

MIAMI-DADE COUNTY APPROVED

5/30/12

NOTICE OF ACCEPTANCE: EVIDENCE SUBMITTED

A. DRAWINGS

1. Manufacturer's die drawings and sections (transferred from file # **08-0423.18**)
2. Drawing No **11-227 (Rev# 08-011)**, titled "Double & Single Out-swing Glass Entrance Doors", sheets 1 through 14 of 14, dated 12/08/12, prepared by Tilteco Inc., signed and sealed by Walter A. Tillit Jr., P.E.

Note: This revision consists of FBC 2010 notes only.

B. TESTS (Submitted under # **08-0423.18**)

Test reports on 1) Air Infiltration Test, per FBC, TAS 202-94
2) Uniform Static Air Pressure Test, Loading per FBC, TAS 202-94.
3) Water Resistance Test, per FBC, TAS 202-94.
4) Large Missile Impact Test per FBC, TAS 201-94
5) Cyclic Wind Pressure Loading per FBC, TAS 203-94
6) Forced Entry Test, per FBC 2411 3.2.1 and TAS 202-94

Along with the manufacturer's parts drawings, installation diagram and marked-up drawings of outswing wood doors, prepared by Fenestration Testing Laboratories, Test Report No **FTL-5452** (07182), dated 2/15/08, signed and sealed by Carlos S. Rionda, P.E.

C. CALCULATIONS

1. Anchor verification calculations complying w/ FBC 2007, prepared by Tilteco Inc., dated 04-18-2008, signed and sealed by Walter A. Tillit, Jr., P.E.(submitted under file # **08-0423.18**).
2. Glazing complies w/ ASTME-1300-02 & 04

D. QUALITY ASSURANCE

1. Miami Dade Department of Permitting, Environment, and Regulatory Affairs (PERA).

E. MATERIAL CERTIFICATIONS

1. Notice of Acceptance No. **11-0325.05** issued to Solutia, for "Saflex clear & color interlayer", expiring on 05/21/2016.

F. STATEMENTS

1. Statement letter of conformance to FBC 2010, dated 01-16-12, prepared by Tilteco Inc., signed and sealed by Walter A. Tillit Jr., P. E.
2. Statement letter of conformance to FBC 2007 and "no financial interest", dated 04-02-2008, signed and sealed by Walter A. Tillit Jr., P. E.(submitted under file # **08-0423.18**).
3. Lab compliance as part of the above referenced test report.

G. OTHER

1. This NOA **revises** NOA # **08-0423.18**, expiring on 07/17/13.
2. Test proposal **07-0366**, approved by BCCO.

Ishaq I. Chanda

Ishaq I. Chanda, P.E.
Product Control Examiner
NOA No 12-0308.43
Expiration Date: July 17, 2013
Approval Date: June 07, 2012

GENERAL NOTES AND SPECIFICATIONS:

1. DOORS SHOWN ON THIS PRODUCT APPROVAL DOCUMENT (P.A.D.) HAVE BEEN VERIFIED FOR COMPLIANCE IN ACCORDANCE WITH THE 2007 & 2010 EDITIONS OF THE FLORIDA BUILDING CODE. DOORS MAY BE INSTALLED AT HIGH VELOCITY HURRICANE ZONES.

DESIGN WIND LOADS SHALL BE DETERMINED AS PER SECTION 1620 OF THE ABOVE MENTIONED CODES, USING ASCE 7-05 STANDARD FOR INSTALLATIONS UNDER 2007 FBC & ASCE 7-10 FOR INSTALLATIONS UNDER 2010 FBC AND SHALL NOT EXCEED THE MAXIMUM (A.S.D.) DESIGN PRESSURE RATING INDICATED ON NOTE 2 BELOW.
IN ORDER TO VERIFY THE ABOVE CONDITION, ULTIMATE DESIGN WIND LOADS DETERMINED PER ASCE 7-10 SHALL BE FIRST REDUCED TO A.S.D. DESIGN WIND LOADS BY MULTIPLYING THEM BY 0.6 IN ORDER TO COMPARE THESE W/ MAX. (A.S.D) DESIGN PRESSURE RATINGS INDICATED ON NOTE 2 BELOW.

IN ORDER TO VERIFY THAT ANCHORS ON THIS P.A.D., AS TESTED, WERE **NOT** OVER STRESSED, A 33% INCREASE IN ALLOWABLE STRESS FOR WIND LOADS WAS **NOT** USED IN THEIR ANALYSIS. A DURATION FACTOR CD= 1.60 WAS USED TO VERIFY FASTENERS IN WOOD.
DOORS'S ADEQUACY FOR IMPACT AND CYCLIC RESISTANCE HAS BEEN VERIFIED IN ACCORDANCE WITH SECTION 1626 OF THE ABOVE MENTIONED CODES PER FTL LAB REPORT No. 5452 PER TAS-201, TAS-202 & TAS-203 PROTOCOLS AND AS PER SUBMITTED STRUCTURAL CALCULATIONS, PERFORMED AS PER SECTION 1612 OF THE FLORIDA BUILDING CODE.

2. **MAXIMUM A.S.D. DESIGN PRESSURE RATING +66.0 psf. -66.0 psf.**

3. THESE DOORS ARE APPROVED FOR AIR/WATER INFILTRATION.

4. ALL DOOR COMPONENTS SHALL BE AS PER BILL OF MATERIALS ON SHEET 11.

5. WOOD BUCKS BY OTHERS, MUST BE ANCHORED PROPERLY TO TRANSFER LOADS TO THE BUILDING STRUCTURE.
WOOD BUCKS MUST HAVE A MINIMUM SPECIFIC DENSITY (G) OF 0.55.
WOOD BUCKS MUST SUSTAIN LOADS IMPOSED BY DOORS AND TRANSFER THEM TO THE BUILDING STRUCTURE AND TO BE REVIEWED BY BUILDING OFFICIAL.

6. ALL FRAME MEMBERS SHALL BE ANCHORED TO EXISTING STRUCTURE FOLLOWING SPECS INDICATED ON SHEETS 2 THRU 10 AS APPLICABLE.

7. **THESE DOORS WILL NOT REQUIRE A HURRICANE PROTECTION DEVICE.**

8. DOORS'S MANUFACTURER LABEL SHALL BE PLACED ON A READILY VISIBLE LOCATION. ONE LABEL SHALL BE PLACED FOR EVERY OPENING. LABEL SHALL READ AS FOLLOWS:
Craftsmen In Wood, Mfg.
PHOENIX, AZ.
MIAMI-DADE COUNTY PRODUCT CONTROL APPROVED.

9. DOORS INSTALLATION SHALL COMPLY WITH SPECS INDICATED IN THIS DRAWING PLUS ANY BUILDING AND ZONING REGULATIONS PROVIDED BY THE JURISDICTION WHERE PERMIT IS APPLIED TO.

10. ALL DOORS COMPONENT EDGES WHICH REMAIN IN CONTINUOUS CONTACT WITH THE BUILDING SHALL BE SEAL/CAULK TO PREVENT WIND/RAIN INTRUSION. CAULK AND SEAL ALL AROUND FULL LENGTH.

11. (a) THIS P.A.D. PREPARED BY THIS ENGINEER IS GENERIC AND DOES NOT PROVIDE INFORMATION FOR A SITE SPECIFIC PROJECT; i.e. WHERE THE SITE CONDITIONS DEVIATE FROM THE P.A.D.

(b) CONTRACTOR TO BE RESPONSIBLE FOR THE SELECTION, PURCHASE AND INSTALLATION INCLUDING LIFE SAFETY OF THIS PRODUCT, BASED ON THIS P.A.D., PROVIDED HE/SHE DOES NOT DEVIATE FROM THE CONDITIONS DETAILED ON THIS DOCUMENT. CONSTRUCTION SAFETY AT SITE IS THE CONTRACTOR'S RESPONSIBILITY.

(c) THIS P.A.D. WILL BE CONSIDERED INVALID IF ALTERED BY ANY MEANS.

(d) SITE SPECIFIC PROJECTS SHALL BE PREPARED BY A FLORIDA REGISTERED ENGINEER OR ARCHITECT WHICH WILL BECOME THE ENGINEER OF RECORD (E.O.R.) FOR THE PROJECT AND WHO WILL BE RESPONSIBLE FOR THE PROPER USE OF THE P.A.D. ENGINEER OF RECORD, ACTING AS A DELEGATED ENGINEER TO THE P.A.D. ENGINEER SHALL SUBMIT TO THIS LATTER THE SITE SPECIFIC DRAWINGS FOR REVIEW IN ADDITION TO A MANDATORY SUBMITTAL TO MIAMI DADE COUNTY BUILDING CODE COMPLIANCE OFFICE FOR EITHER A PRODUCT APPROVAL REVISION OR A ONE TIME APPROVAL.

(e) ORIGINAL P.A.D. SHALL BEAR THE DATE, SEAL AND SIGNATURE OF THE PROFESSIONAL ENGINEER OF RECORD THAT PREPARED IT.

PRODUCT REVISED
to complying with the Florida Building Code
Acceptance No 12-0308.43
Expiration Date July 17, 2013
By Ishaq I. Chanda
Miami Dade Product Control

WALTER A. TILLIT JR. LICENSE No. 44167 STATE OF FLORIDA PROFESSIONAL ENGINEER
P.E. SEAL/SIGNATURE/DATE

© 2011 TILTECO INC.

TILTECO INC.
TILLIT TESTING & ENGINEERING COMPANY
6355 N.W. 36th. St., Ste.305, VIRGINIA GARDENS, Fl 33166
Phone : (305)871-1530 , Fax : (305)871-1551
e-mail: tilteco@aol.com
EB-0006719
WALTER A. TILLIT Jr., P.E.
FLORIDA Lic. 44167

FLORIDA BUILDING CODE (HIGH VELOCITY HURRICANE ZONE)

DOUBLE & SINGLE OUT-SWING GLASS ENTRANCE DOORS

Craftsmen In Wood, Mfg.
5441 West Hadley St., Phoenix, AZ 85043
Phone: (602) 296-1050 Fax: (602) 296-1052

REV. NO	DESCRIPTION	DATE	REV. No	DESCRIPTION	DATE
1	OLD 08-011	12/07/11	3		
2			4		

L.G./M.C.V./A.G. DRAWN BY
12/07/11 DATE
11-227 DRAWING No

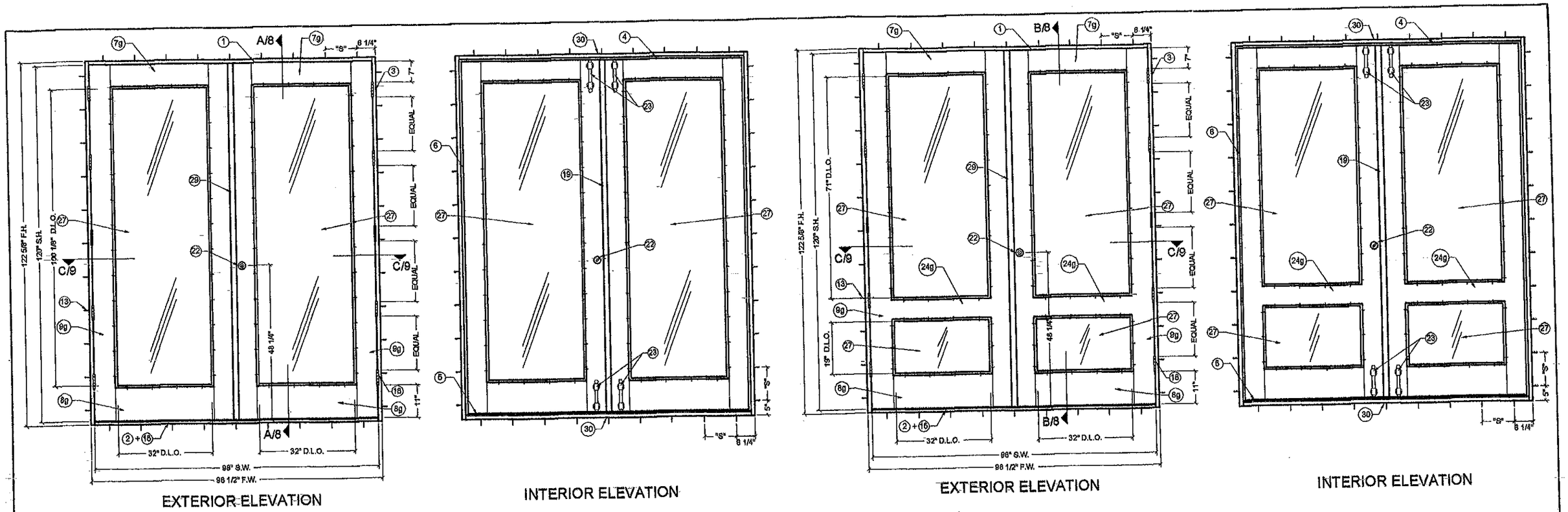

EXTERIOR ELEVATION

INTERIOR ELEVATION

EXTERIOR ELEVATION

INTERIOR ELEVATION

REGULAR GLASS OUT-SWING DOUBLE DOOR : (XX)

MODEL 1

N.T.S.

ANCHOR TYPE (13) MAX. ANCHOR SPACING SCHEDULE AT JAMBS, HEAD & SILL		
DESIGN PRESSURE RATING W (PSF)	"S" CONCRETE (Min. f'c = 2700 psi) OR CONCRETE BLOCK (Min. ASTM C-90)	"S" WOOD (Min. G=0.55)
50	10"	8"
60	9"	7"
66	8"	6"

PREFIX LEGEND
- F.W.: MAX. FRAME WIDTH
- F.H.: MAX. FRAME HEIGHT
- S.W.: MAX. SASH TOTAL WIDTH
- S.H.: MAX. SASH HEIGHT
- D.L.O.: MAX. DAYLIGHT OPENING

MAX. A.S.D. DESIGN PRESSURE RATING	
POSITIVE	+66 psf
NEGATIVE	-66 psf
WATER TEST PRESSURE	11.3 psf

PRODUCT REVISED
as complying with the Florida
Building Code
Acceptance No 12-0308.43
Expiration Date 7/17/13
By Ishaq I. Chaudhuri
Miami Dade Product Control

WALTER A. TILLIT JR. LICENSE No. 44167 STATE OF FLORIDA PROFESSIONAL ENGINEER

P.E. SEAL/SIGNATURE/DATE

© 2011 TILTECO INC.

TILTECO INC.
TILLIT TESTING & ENGINEERING COMPANY
6355 N.W. 36th. St., Ste.305, VIRGINIA GARDENS, Fl 33166
Phone : (305)871-1530 . Fax : (305)871-1531
e-mail: tilteco@aol.com
EB-0006719
WALTER A. TILLIT Jr., P.E.
FLORIDA Lic. 44167

FLORIDA BUILDING CODE (HIGH VELOCITY HURRICANE ZONE)

DOUBLE & SINGLE OUT-SWING GLASS ENTRANCE DOORS

Craftsmen In Wood, Mfg.
5441 West Hadley St., Phoenix, AZ 85043
Phone: (602) 296-1050 Fax: (602) 296-1052

REV. NO	DESCRIPTION	DATE	REV. No	DESCRIPTION	DATE
1	GLO 08-011	12/07/11	3		
2			4		

L.G./M.C.V./A.G. DRAWN BY

12/07/11 DATE

11-227 DRAWING No

SHEET 2 OF 14

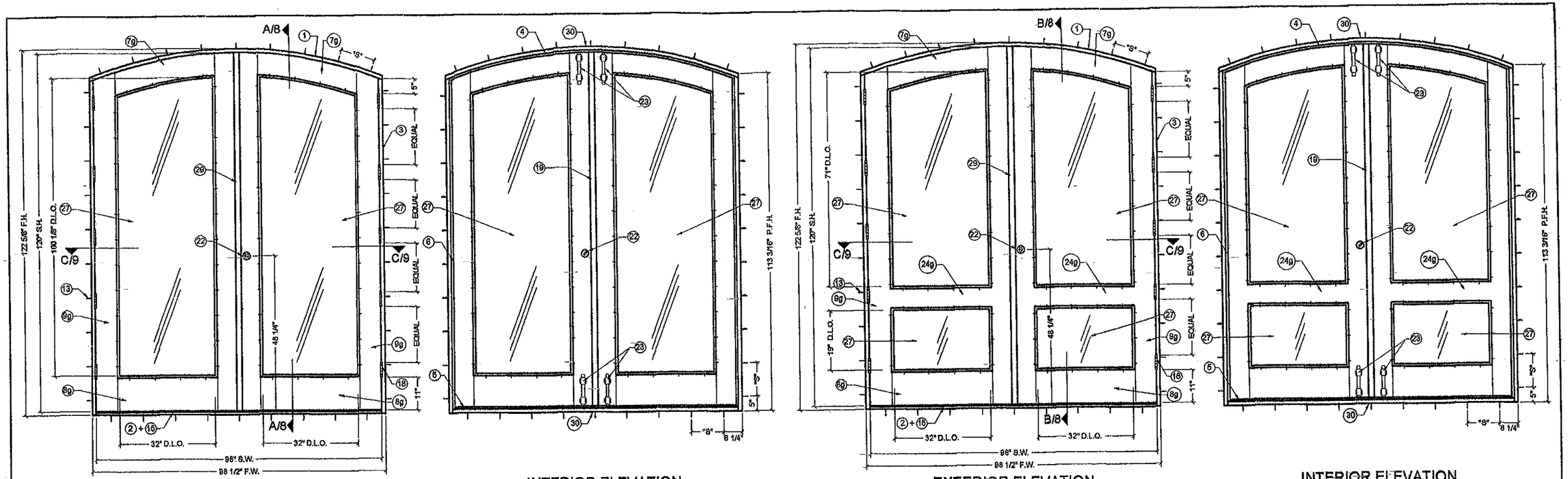

EXTERIOR ELEVATION

INTERIOR ELEVATION

EXTERIOR ELEVATION

INTERIOR ELEVATION

EYEBROW GLASS OUT-SWING DOUBLE DOOR: (XX)
MODEL 2
N.T.S.

ANCHOR TYPE (13) MAX. ANCHOR SPACING SCHEDULE AT JAMBS, HEAD & SILL		
DESIGN PRESSURE RATING W (PSF)	"S" CONCRETE (Min. fc = 2700 psi) OR CONCRETE BLOCK (Min. ASTM C-90)	"S" WOOD (Min. G=0.55)
50	10"	8"
60	9"	7"
66	8"	6"

PREFIX LEGEND
- F.W.: MAX. FRAME WIDTH
- F.H.: MAX. FRAME HEIGHT
- S.W.: MAX. SASH TOTAL WIDTH
- S.H.: MAX. SASH HEIGHT
- D.L.O.: MAX. DAYLIGHT OPENING

MAX. A.S.D. DESIGN PRESSURE RATING	
POSITIVE	+66 psf
NEGATIVE	-66 psf
WATER TEST PRESSURE	11.3 psf

PRODUCT REVISED
as complying with the Florida
Building Code
Acceptance No 12-0308.43
Expiration Date 7/17/13
By /Shaq/. Chaunk
Miami Dade Product Control

WALTER A. TILLIT JR.
LICENSE
No. 44167
STATE OF FLORIDA
PROFESSIONAL ENGINEER

P.E. SEAL / SIGNATURE / DATE

FLORIDA BUILDING CODE (HIGH VELOCITY HURRICANE ZONE)

© 2011 TILTECO INC.

TILTECO INC.
TILLIT TESTING & ENGINEERING COMPANY
6355 N.W. 36th. St., Ste.305, VIRGINIA GARDENS, Fl 33166
Phone : (305)871-1530 . Fax : (305)871-1531
e-mail: tilteco@aol.com
EB-0006719
WALTER A. TILLIT Jr., P.E.
FLORIDA Lic. 44167

DOUBLE & SINGLE OUT-SWING GLASS ENTRANCE DOORS

Craftsmen In Wood, Mfg.
5441 West Hadley St., Phoenix, AZ 85043
Phone: (602) 296-1050 Fax: (602) 296-1052

REV. NO	DESCRIPTION	DATE	REV. No	DESCRIPTION	DATE
1	OLD 08-011	12/07/11	3		
2			4		

L.G./M.C.V./A.G. DRAWN BY

12/07/11 DATE

11-227 DRAWING No

SHEET 3 OF 14

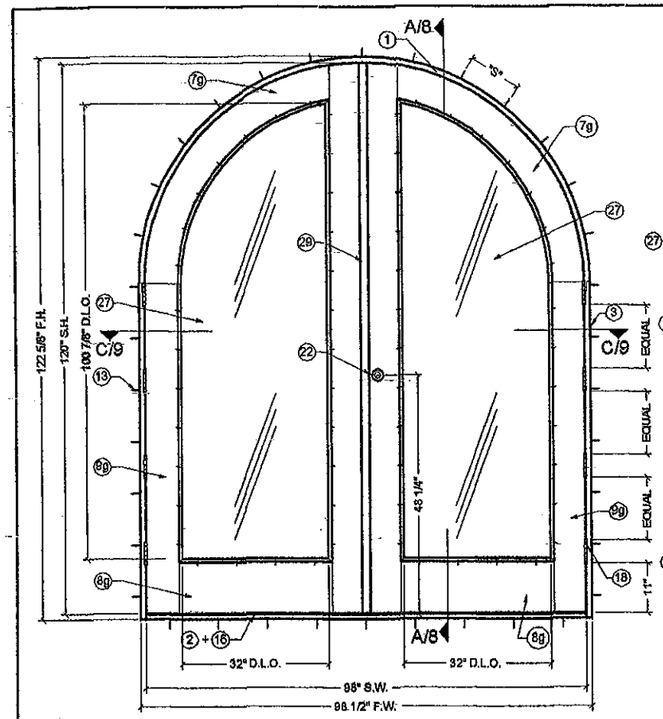

EXTERIOR ELEVATION

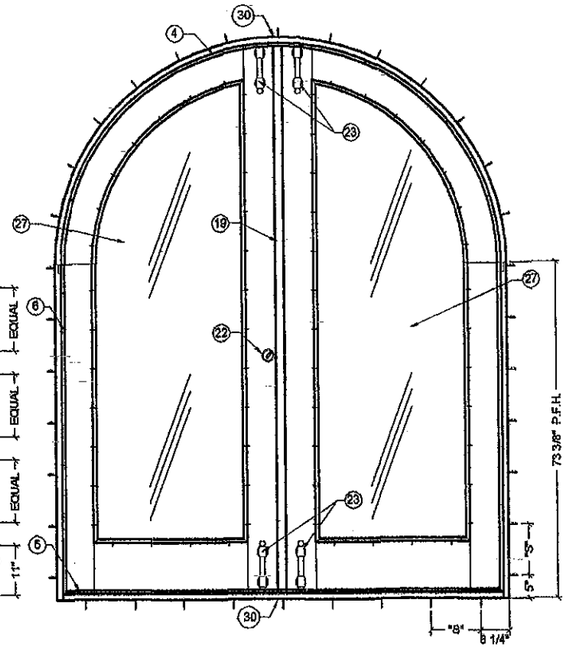

INTERIOR ELEVATION

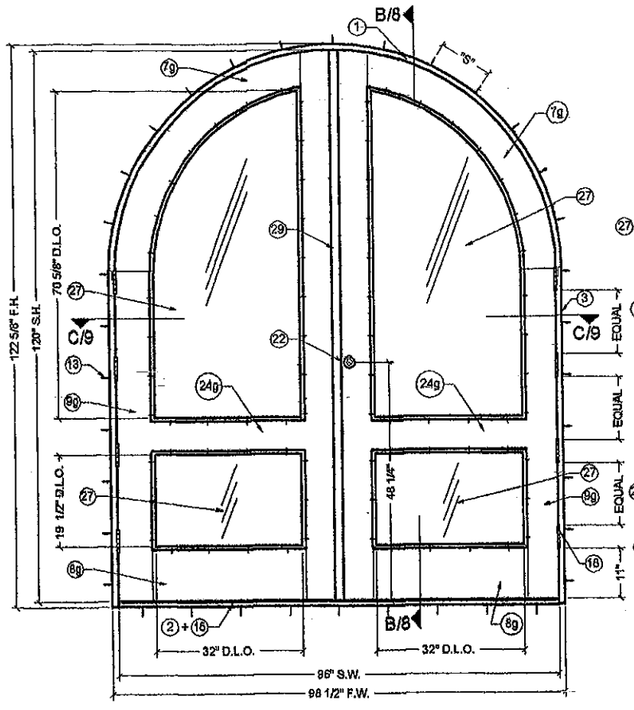

EXTERIOR ELEVATION

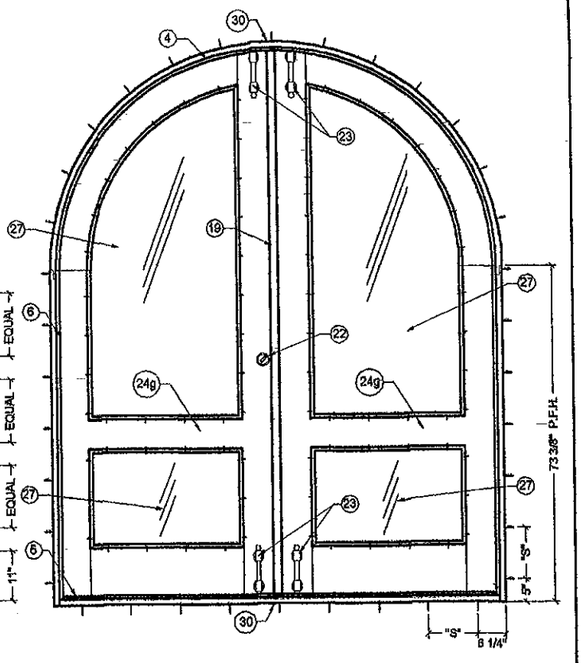

INTERIOR ELEVATION

ARCH GLASS OUT-SWING DOUBLE DOOR: (XX)

MODEL 3

N.T.S.

ANCHOR TYPE (13) MAX. ANCHOR SPACING SCHEDULE AT JAMBS, HEAD & SILL		
DESIGN PRESSURE RATING W (PSF)	"S" CONCRETE (Min. f'c = 2700 psi) OR CONCRETE BLOCK (Min. ASTM C-90)	"S" WOOD (Min. G=0.66)
50	10"	8"
60	9"	7"
66	8"	6"

PREFIX LEGEND
- F.W.: MAX. FRAME WIDTH
- F.H.: MAX. FRAME HEIGHT
- S.W.: MAX. SASH TOTAL WIDTH
- S.H.: MAX. SASH HEIGHT
- D.L.O.: MAX. DAYLIGHT OPENING

MAX. A.S.D. DESIGN PRESSURE RATING	
POSITIVE	+66 psf
NEGATIVE	-66 psf
WATER TEST PRESSURE	11.3 psf

PRODUCT REVISED
as complying with the Florida Building Code
Application No 12-0308.43
Expiration Date 7.17.13
By Miami Date Product Control

WALTER A. TILLIT JR. LICENSE No. 44167 STATE OF FLORIDA PROFESSIONAL ENGINEER
P.E. SEAL/SIGNATURE/DATE

© 2011 TILTECO INC.

TILTECO INC.
TILLIT TESTING & ENGINEERING COMPANY
8355 N.W. 36th. St., Ste.305, VIRGINIA GARDENS, Fl 33166
Phone : (305)871-1530 . Fax : (305)871-1531
e-mail: tilteco@aol.com
EB-0006719
WALTER A. TILLIT Jr., P.E.
FLORIDA Lic. 44167

FLORIDA BUILDING CODE (HIGH VELOCITY HURRICANE ZONE)

DOUBLE & SINGLE OUT-SWING GLASS ENTRANCE DOORS

L.G./M.C.V./A.G. DRAWN BY

Craftsmen In Wood, Mfg.
5441 West Hadley St., Phoenix, AZ 85043
Phone: (602) 296-1050 Fax: (602) 296-1052

12/07/11 DATE

11-227 DRAWING No

REV. NO	DESCRIPTION	DATE	REV. No	DESCRIPTION	DATE
1	OLD 08-011	12/07/11	3		
2			4		

SHEET 4 OF 14

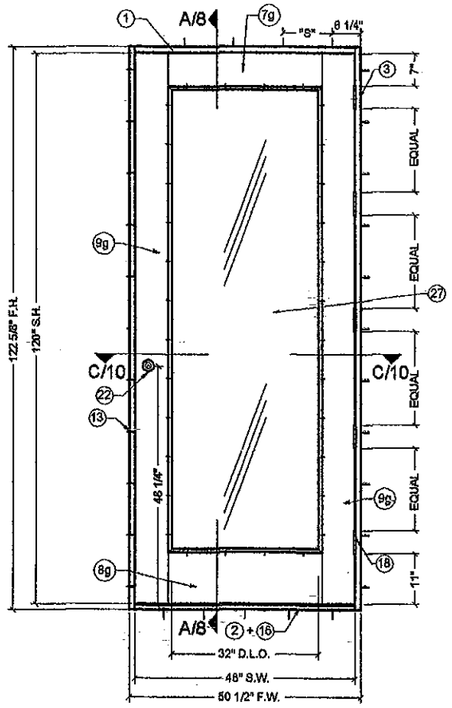

EXTERIOR ELEVATION

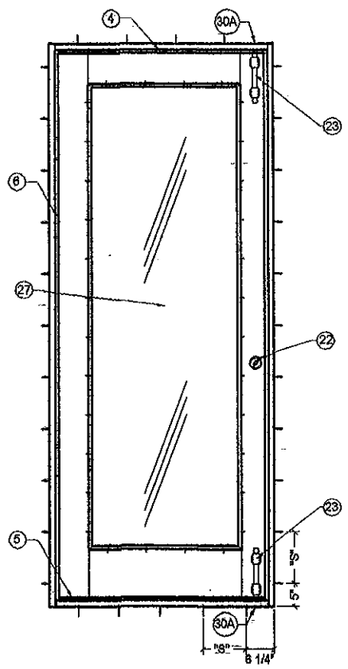

INTERIOR ELEVATION

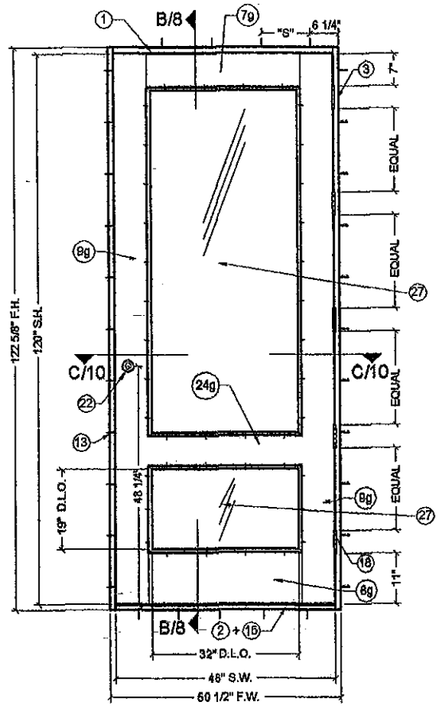

EXTERIOR ELEVATION

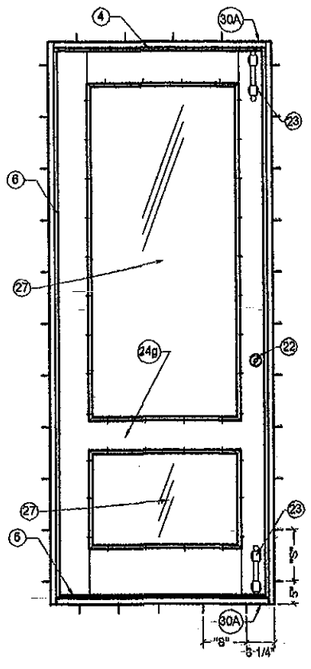

INTERIOR ELEVATION

REGULAR WOOD OUT-SWING SINGLE DOOR: (X)

MODEL 1

N.T.S.

ANCHOR TYPE (13) MAX. ANCHOR SPACING SCHEDULE AT JAMBS, HEAD & SILL		
DESIGN PRESSURE RATING W (PSF)	"S" CONCRETE (Min. f'c = 2700 psi) OR CONCRETE BLOCK (Min. ASTM C-90)	"S" WOOD (Min. G=0.55)
50	10"	10"
60	10"	10"
66	10"	10"

PREFIX LEGEND
- F.W.: MAX. FRAME WIDTH
- F.H.: MAX. FRAME HEIGHT
- S.W.: MAX. SASH TOTAL WIDTH
- S.H.: MAX. SASH HEIGHT
- D.L.O.: MAX. DAYLIGHT OPENING

MAX. A.S.D. DESIGN PRESSURE RATING	
POSITIVE	+66 psf
NEGATIVE	-66 psf
WATER TEST PRESSURE	11.3 psf

PRODUCT REVISED
as complying with the Florida Building Code
Acceptance No. 12-0306.43
Expiration Date July 1, 2013
By Ishaq I. Chanda
Print Name Product Control

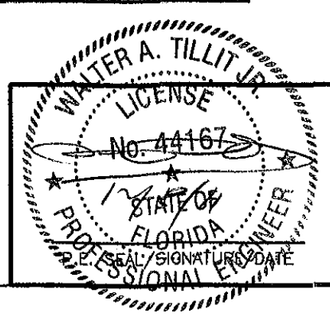

© 2011 TILTECO INC.

TILTECO INC.
TILLIT TESTING & ENGINEERING COMPANY
6355 N.W. 36th. St., Ste.305, VIRGINIA GARDENS, Fl. 33166
Phone : (305)871-1830 , Fax : (305)871-1831
e-mail: tilteco@aol.com
EB-0006719
WALTER A. TILLIT Jr., P.E.
FLORIDA Lic. 44167

FLORIDA BUILDING CODE (HIGH VELOCITY HURRICANE ZONE)

DOUBLE & SINGLE OUT-SWING GLASS ENTRANCE DOORS

L.G./M.C.V./A.G. DRAWN BY

Craftsmen In Wood, Mfg.
5441 West Hadley St., Phoenix, AZ 85043
Phone: (602) 296-1050 Fax: (602) 296-1052

12/07/11 DATE

11-227 DRAWING No

REV. NO	DESCRIPTION	DATE	REV. No	DESCRIPTION	DATE
1	OLD 08-011	12/07/11	3		
2			4		

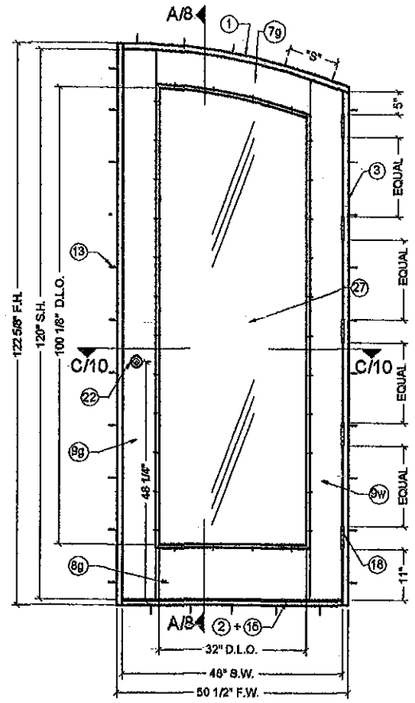

EXTERIOR ELEVATION

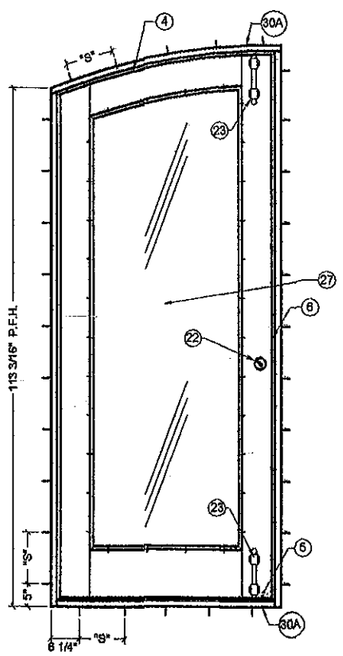

INTERIOR ELEVATION

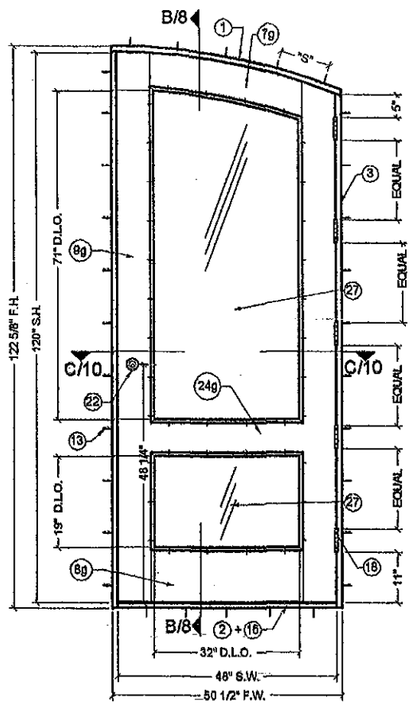

EXTERIOR ELEVATION

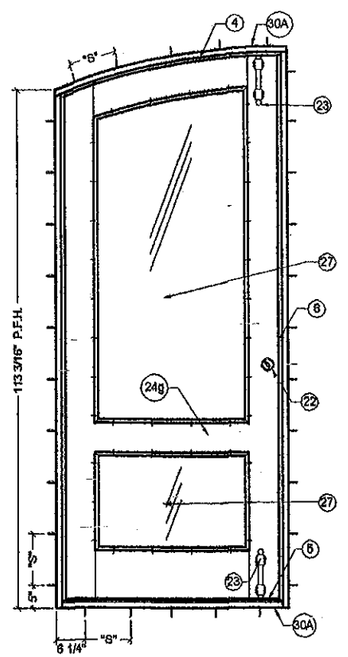

INTERIOR ELEVATION

EYEBROW WOOD OUT-SWING SINGLE DOOR: (X)

MODEL 2

N.T.S.

ANCHOR TYPE (13) MAX. ANCHOR SPACING SCHEDULE AT JAMBS, HEAD & SILL		
DESIGN PRESSURE RATING W (PSF)	"S" CONCRETE (Min. f'c = 2700 psi) OR CONCRETE BLOCK (Min. ASTM C-90)	"S" WOOD (Min. G=0.65)
50	10"	10"
60	10"	10"
66	10"	10"

PREFIX LEGEND
- F.W.: MAX. FRAME WIDTH
- F.H.: MAX. FRAME HEIGHT
- S.W.: MAX. SASH TOTAL WIDTH
- S.H.: MAX. SASH HEIGHT
- D.L.O.: MAX. DAYLIGHT OPENING
- P.F.H.: MAX. PARTIAL FRAME HEIGHT

MAX. A.S.D. DESIGN PRESSURE RATING	
POSITIVE	+66 psf
NEGATIVE	-66 psf
WATER TEST PRESSURE	11.3 psf

PRODUCT REVISED
as complying with the Florida
Building Code
Acceptance No. 12-0308.43
Expiration Date 7/17/13
By Miami Dade Product Control

WALTER A. TILLIT JR LICENSE No. 44167 STATE OF FLORIDA PROFESSIONAL ENGINEER
SEAL/SIGNATURE/DATE

FLORIDA BUILDING CODE (HIGH VELOCITY HURRICANE ZONE)

© 2011 TILTECO INC.

TILTECO INC.
TILLIT TESTING & ENGINEERING COMPANY
6355 N.W. 36th. St., Ste.305, VIRGINIA GARDENS, FL 33166
Phone : (305)871-1530 . Fax : (305)871-1531
e-mail: tilteco@aol.com
EB-0006719
WALTER A. TILLIT Jr., P.E.
FLORIDA Lic. 44167

DOUBLE & SINGLE OUT-SWING GLASS ENTRANCE DOORS

L.G./M.C.V./A.G. DRAWN BY

Craftsmen In Wood, Mfg.
6441 West Hadley St., Phoenix, AZ 85043
Phone: (602) 296-1050 Fax: (602) 296-1052

12/07/11 DATE

11-227 DRAWING No

REV. NO	DESCRIPTION	DATE	REV. No	DESCRIPTION	DATE
1	OLD 08-011	12/07/11	3		
2			4		

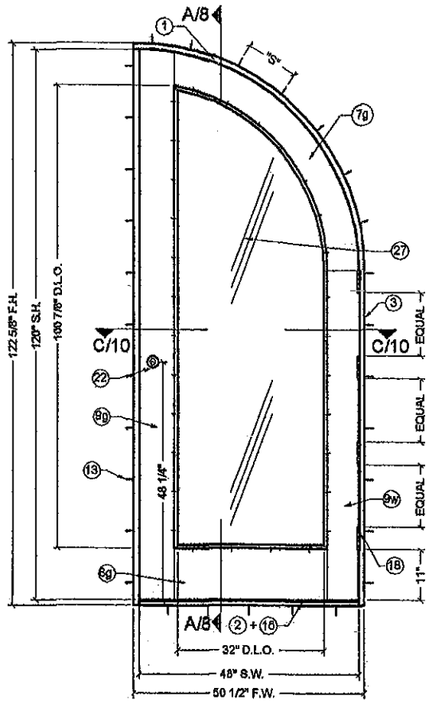

EXTERIOR ELEVATION

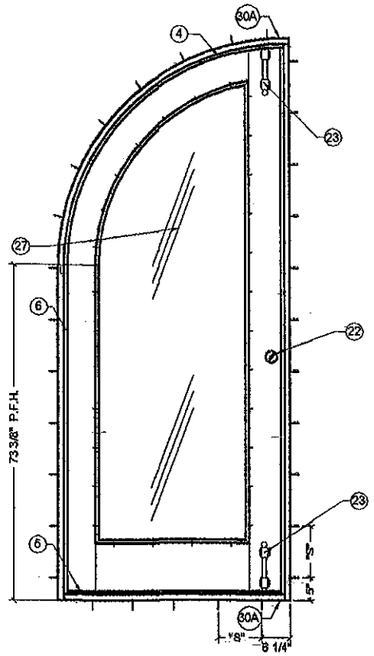

INTERIOR ELEVATION

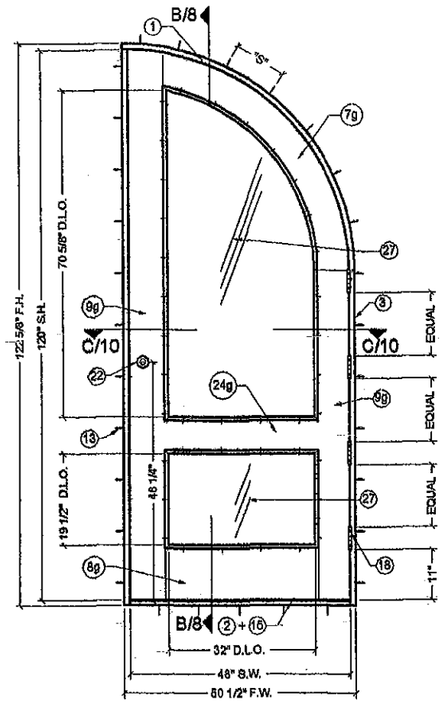

EXTERIOR ELEVATION

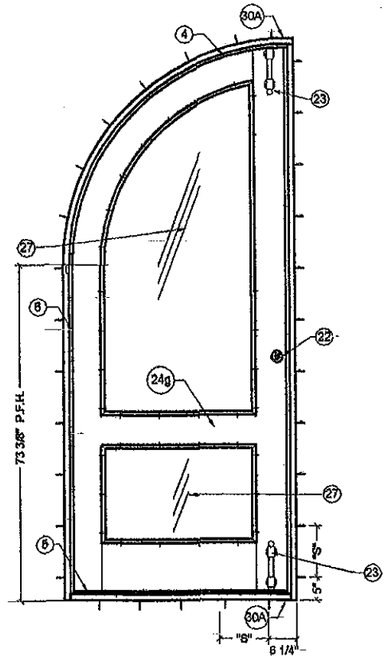

INTERIOR ELEVATION

ARCH WOOD OUT-SWING SINGLE DOOR: (X)

MODEL 3

N.T.S.

ANCHOR TYPE (13) MAX. ANCHOR SPACING SCHEDULE AT JAMBS, HEAD & SILL		
DESIGN PRESSURE RATING W (PSF)	"S" CONCRETE (Min. f'c = 2700 psi) OR CONCRETE BLOCK (Min. ASTM C-90)	"S" WOOD (Min. G=0.55)
50	10"	10"
60	10"	10"
66	10"	10"

PREFIX LEGEND
- F.W.: MAX. FRAME WIDTH
- F.H.: MAX. FRAME HEIGHT
- S.W.: MAX. SASH TOTAL-WIDTH
- S.H.: MAX. SASH HEIGHT
- D.L.O.: MAX. DAYLIGHT OPENING
- P.F.H.: MAX. PARTIAL FRAME HEIGHT

MAX. A.S.D. DESIGN PRESSURE RATING	
POSITIVE	+66 psf
NEGATIVE	-66 psf
WATER TEST PRESSURE	11.3 psf

PRODUCT REVISED
as complying with the Florida Building Code
Acceptance No. 12-0308.43
Expiration Date 7/17/13
By [signature]
Miami Dade Product Control

WALTER A. TILLIT JR. LICENSE No. 44167 STATE OF FLORIDA PROFESSIONAL ENGINEER
SEAL / SIGNATURE / DATE

© 2011 TILTECO INC.

TILTECO INC.
TILLIT TESTING & ENGINEERING COMPANY
6355 N.W. 36th. St., Ste.305, VIRGINIA GARDENS, Fl 33166
Phone : (305)871-1530 . Fax : (305)871-1531
e-mail: tilteco@aol.com
EB-0006719
WALTER A. TILLIT Jr., P.E.
FLORIDA Lic. 44167

FLORIDA BUILDING CODE (HIGH VELOCITY HURRICANE ZONE)

DOUBLE & SINGLE OUT-SWING GLASS ENTRANCE DOORS

Craftsmen In Wood, Mfg.
5441 West Hadley St., Phoenix, AZ 85043
Phone: (602) 296-1050 Fax: (602) 296-1052

REV. NO	DESCRIPTION	DATE	REV. No	DESCRIPTION	DATE
1	OLD 08-011	12/07/11	3		
2			4		

L.G./M.C.V./A.G. DRAWN BY

12/07/11 DATE

11-227 DRAWING No

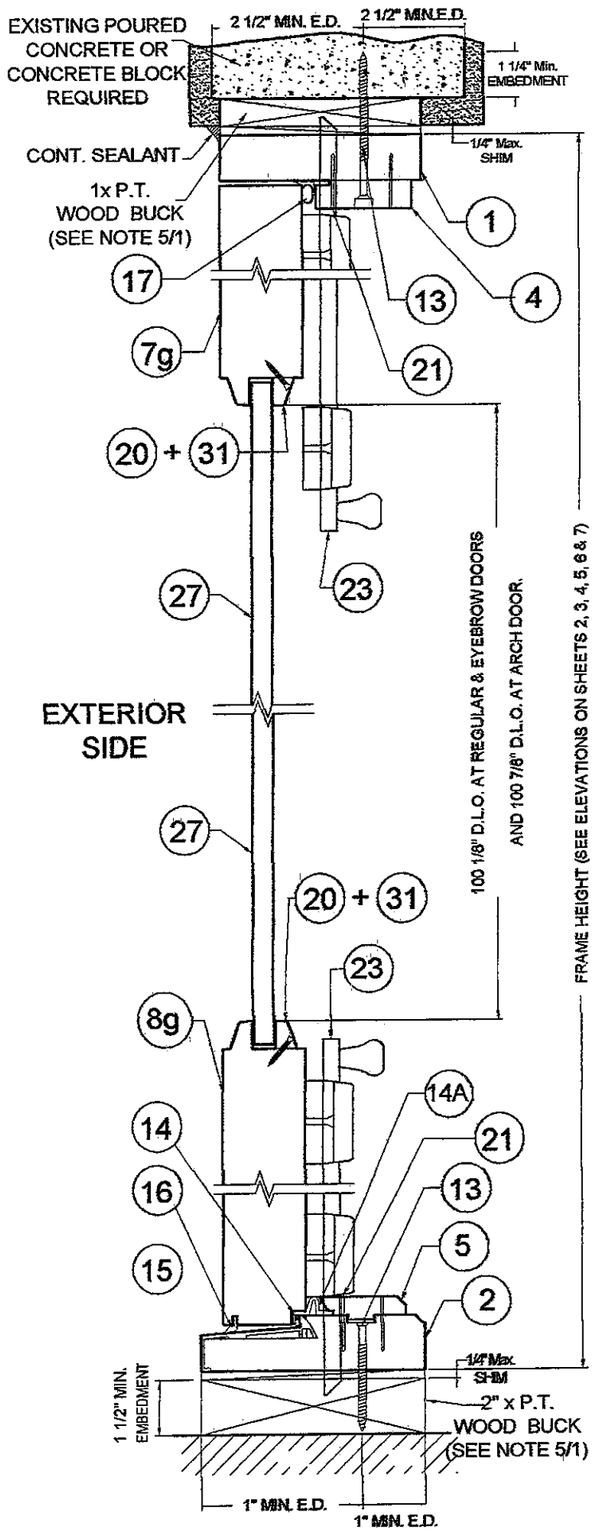

SECTION A
SCALE: 1/4"=1"

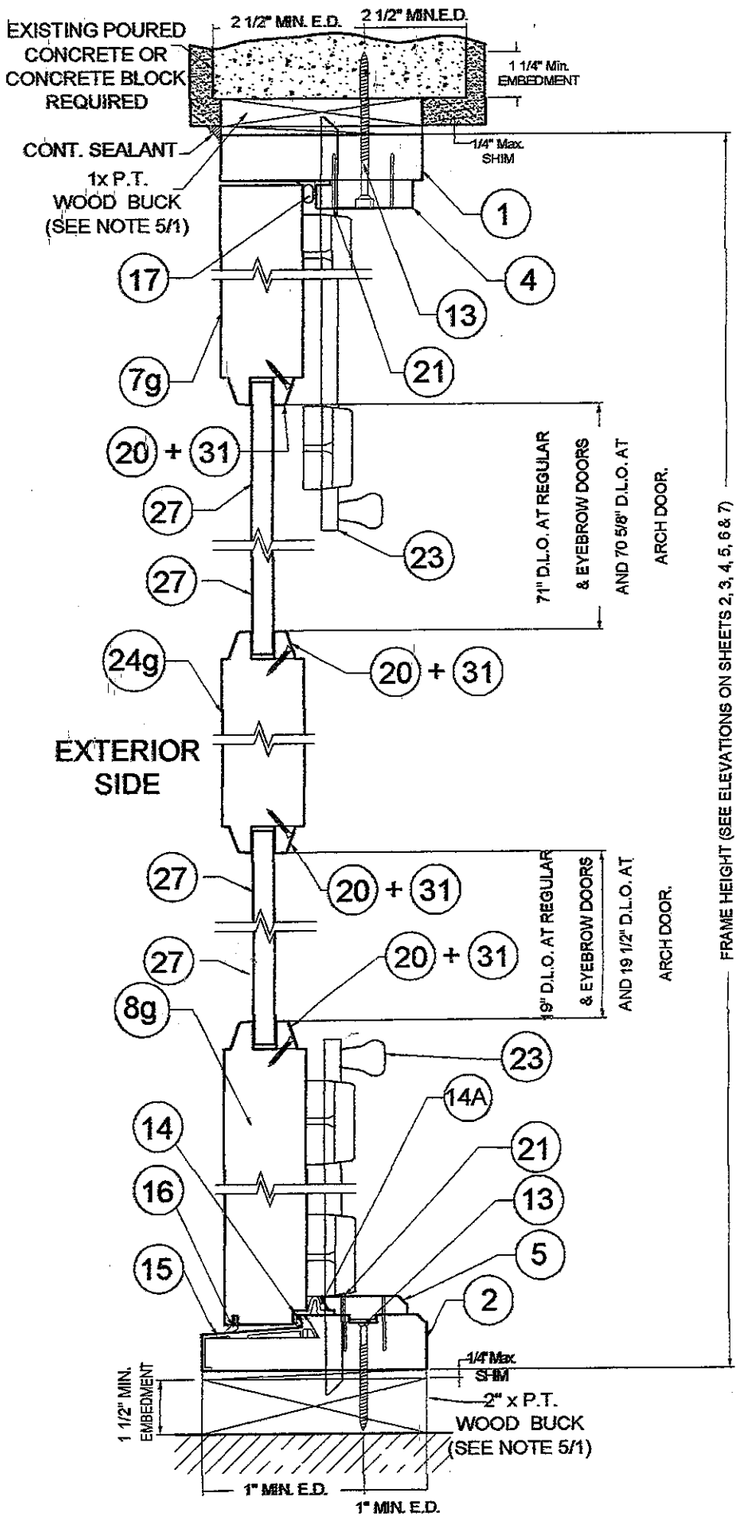

SECTION B
SCALE: 1/4"=1"

PRODUCT REVISED
as complying with the Florida Building Code
Acceptance No. 12030843
Expiration Date 7/17/13
By [illegible]
Miami Dade Product Control

WALTER A. TILLIT JR. LICENSE No. 44167 STATE OF FLORIDA PROFESSIONAL ENGINEER
P.E. SEAL/SIGNATURE/DATE

FLORIDA BUILDING CODE (HIGH VELOCITY HURRICANE ZONE)

© 2011 TILTECO INC.

TILTECO INC.
TILLIT TESTING & ENGINEERING COMPANY
5355 N.W. 36th. St., Ste.305, VIRGINIA GARDENS, FL 33166
Phone : (305)871-1530 - Fax : (305)871-1531
e-mail: tilteco@aol.com
EB-0006719
WALTER A. TILLIT Jr., P.E.
FLORIDA Lic. 44167

DOUBLE & SINGLE OUT-SWING GLASS ENTRANCE DOORS

L.G./M.C.V./A.G. DRAWN BY

Craftsmen In Wood, Mfg.
5441 West Hadley St., Phoenix, AZ 85043
Phone: (602) 296-1050 Fax: (602) 296-1052

12/07/11 DATE

11-227 DRAWING No

REV. NO	DESCRIPTION	DATE	REV. No	DESCRIPTION	DATE
1	OLD 08-011	12/07/11	3		
2			4		

SHEET 8 OF 14

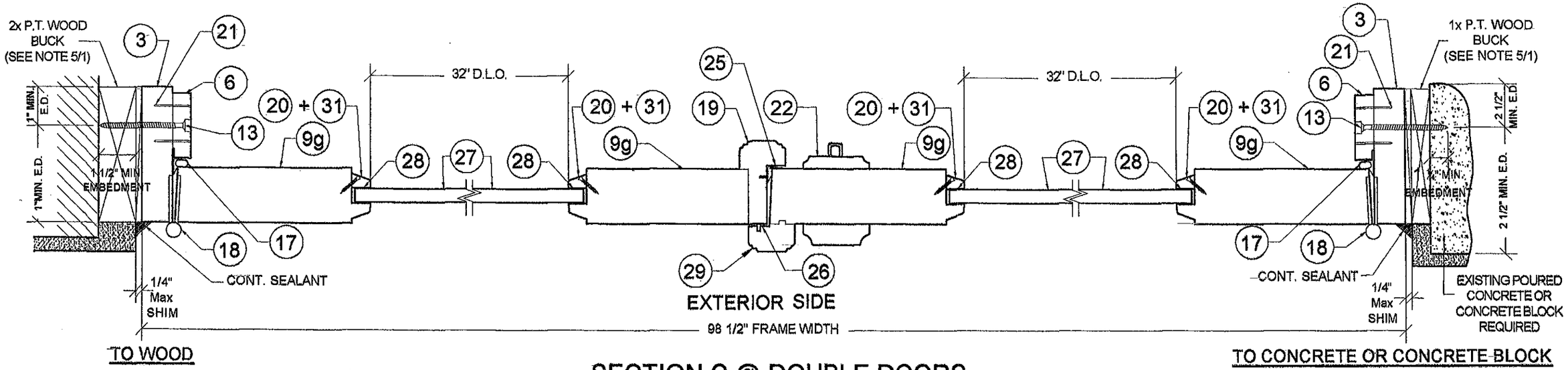

SECTION C @ DOUBLE DOORS

SCALE: 1/4"=1"

GLASS BITE SCHEDULE	
DOOR TYPE	MIN. BITE
REGULAR	1.020"
ARCH	0.575"
EYEBROW	0.570"

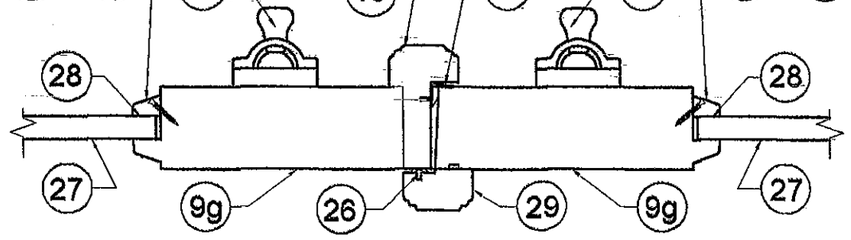

CENTER TOP/BOTTOM SECTION AT SURFACE BOLT 23 @ DOUBLE DOORS

SCALE: 1/4"=1"

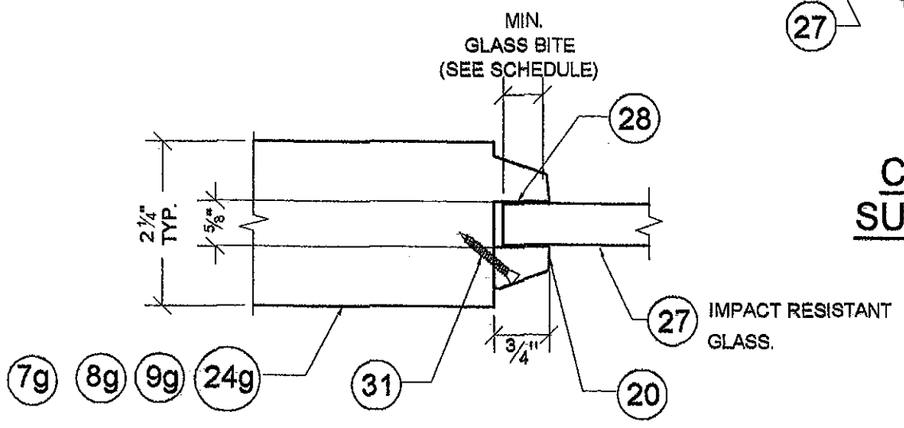

GLAZING GLASS PANEL DETAIL @ DOUBLE DOORS

SCALE: 1/2"=1"

PRODUCT REVISED
as complying with the Florida Building Code
Acceptance No. 12-0308.43
Expiration Date 7/17/13
By [signature]
Miami Dade Product Control

WALTER A. TILLIT JR. LICENSE NO. 44167 STATE OF FLORIDA PROFESSIONAL ENGINEER
SEAL/SIGNATURE/DATE

© 2011 TILTECO INC.

TILTECO INC.
TILLIT TESTING & ENGINEERING COMPANY
6355 N.W. 36th. St., Ste.305, VIRGINIA GARDENS, FL 33166
Phone : (305)871-1530 . Fax : (305)871-1551
e-mail: tilteco@aol.com
EB-0006719
WALTER A. TILLIT Jr., P.E.
FLORIDA Lic. 44167

FLORIDA BUILDING CODE (HIGH VELOCITY HURRICANE ZONE)

DOUBLE & SINGLE OUT-SWING GLASS ENTRANCE DOORS

L.G./M.C.V./A.G. DRAWN BY

Craftsmen In Wood, Mfg.
5441 West Hadley St., Phoenix, AZ 85043
Phone: (602) 296-1050 Fax: (602) 296-1052

12/07/11 DATE

11-227 DRAWING No

REV. NO	DESCRIPTION	DATE	REV. No	DESCRIPTION	DATE
1	OLD 08-011	12/07/11	3		
2			4		

GLASS BITE SCHEDULE	
DOOR TYPE	MIN. BITE
REGULAR	1.020"
ARCH	0.575"
EYEBROW	0.570"

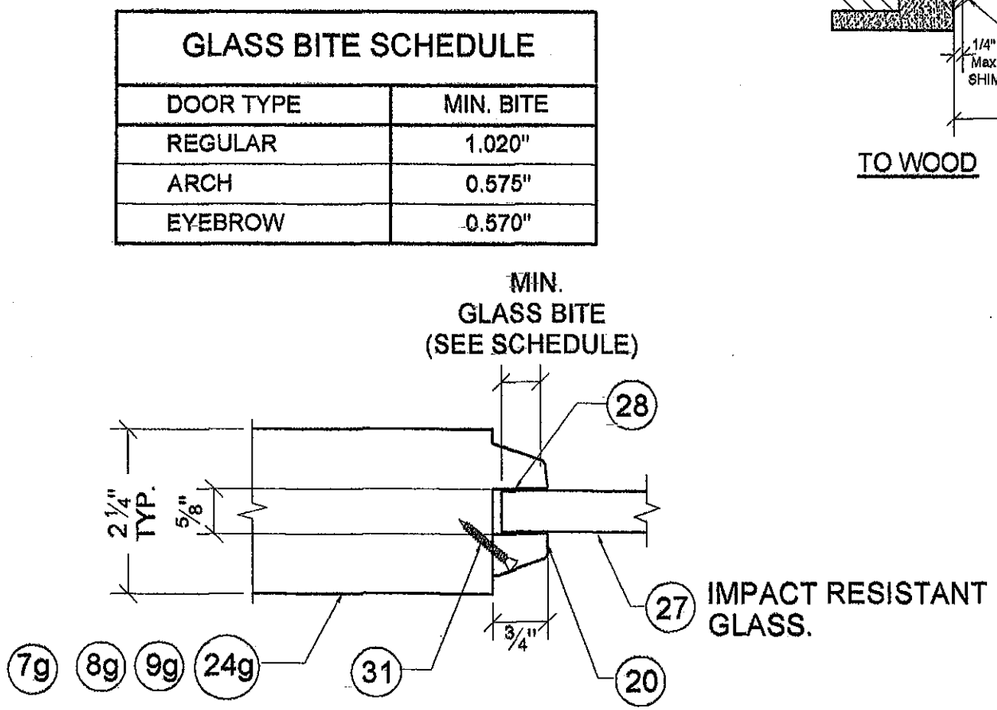

GLAZING GLASS PANEL DETAIL @ SINGLE DOOR

SCALE: 3/8"=1"

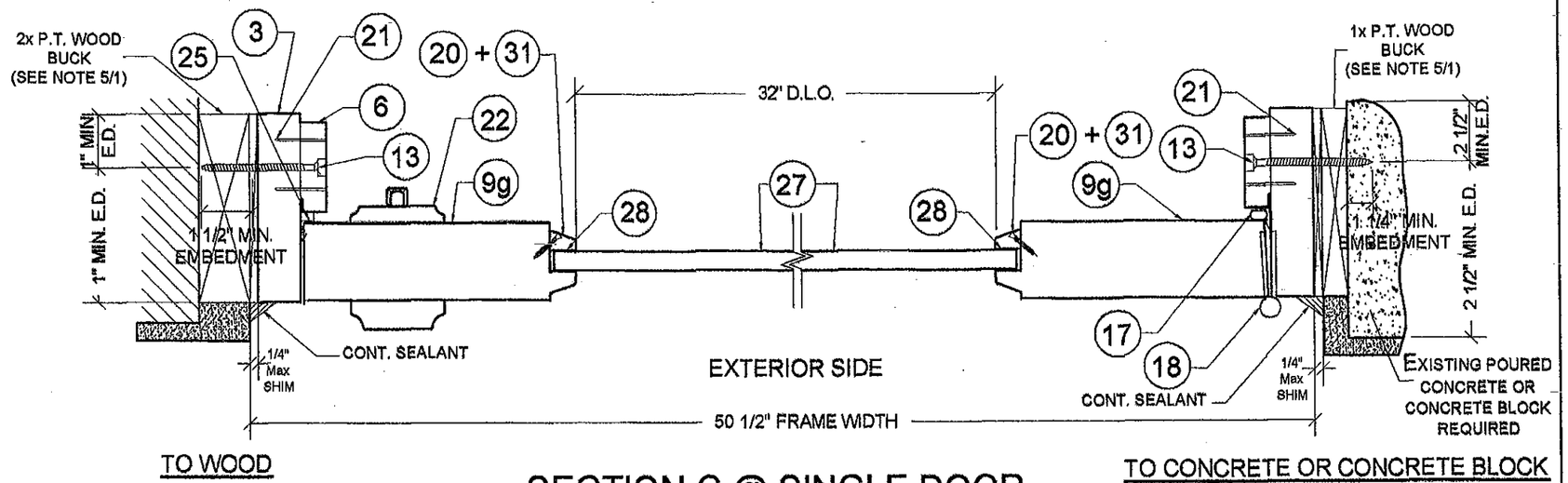

SECTION C @ SINGLE DOOR

SCALE: 1/4"=1"

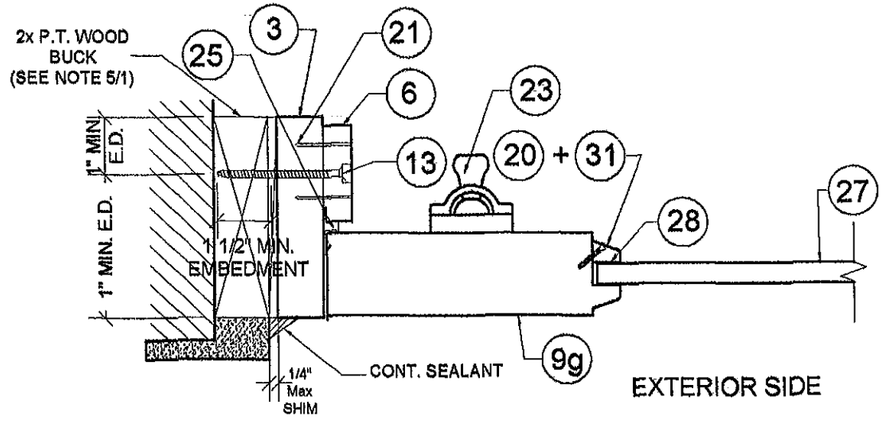

CENTER TOP/BOTTOM SECTION AT SURFACE BOLT (23) @ SINGLE DOOR

SCALE: 1/4"=1"

PRODUCT REVISED as complying with the Florida Building Code
Acceptance No. 12-0308.43
Expiration Date 7/17/13
By Ishaq I. Chaudhary
Miami Dade Product Control

FLORIDA BUILDING CODE (HIGH VELOCITY HURRICANE ZONE)

WALTER A. TILLIT JR. LICENSE NO. 44167 STATE OF FLORIDA PROFESSIONAL ENGINEER
SEAL / SIGNATURE / DATE

© 2011 TILTECO INC.

TILTECO INC.
TILLIT TESTING & ENGINEERING COMPANY
8355 N.W. 36th. St., Ste.305, VIRGINIA GARDENS, Fl 33166
Phone : (305)871-1530 , Fax : (305)871-1531
e-mail: tilteco@aol.com
EB-0006719
WALTER A. TILLIT Jr., P.E.
FLORIDA Lic. 44167

DOUBLE & SINGLE OUT-SWING GLASS ENTRANCE DOORS

L.G./M.C.V./A.G. DRAWN BY

Craftsmen In Wood, Mfg.
6441 West Hadley St., Phoenix, AZ 85043
Phone: (602) 296-1050 Fax: (602) 296-1052

12/07/11 DATE

11-227 DRAWING No

REV. NO	DESCRIPTION	DATE	REV. No	DESCRIPTION	DATE
1	OLD 08-011	12/07/11	3		
2			4		

GLASS DOORS W/ FRAME HEIGHT UP TO 122-5/8"

ITEM #	QTY	PART DESCRIPTION	SIZE	MATERIAL REMARKS
1	1	FRAME HEAD **	1-1/4" x 5-1/2"	DOUG FIR(.51), ALD(.41), ENG. MAH(.45), CHERRY(.50), MESQ(.65), OAK (.61),TEAK (.55), WALNUT (.55), CYPRESS (.46), SPANISH CEDAR (.41)
2	1	FRAME SILL **	2" x 6-1/8"	DOUG FIR(.51), ALD(.41), ENG. MAH(.45), CHERRY(.50), MESQ(.65), OAK (.61),TEAK (.55), WALNUT (.55), CYPRESS (.46), SPANISH CEDAR (.41)
3	2	FRAME JAMB **	1-1/4" x 5-1/2"	DOUG FIR(.51), ALD(.41), ENG. MAH(.45), CHERRY(.50), MESQ(.65), OAK (.61),TEAK (.55), WALNUT (.55), CYPRESS (.46), SPANISH CEDAR (.41)
4	1	FRAME HEAD STOP **	7/8" x 2-5/8"	DOUG FIR(.51), ALD(.41), ENG. MAH(.45), CHERRY(.50), MESQ(.65), OAK (.61),TEAK (.55), WALNUT (.55), CYPRESS (.46), SPANISH CEDAR (.41)
5	1	FRAME SILL STOP **	5/8" x 2-3/8"	DOUG FIR(.51), ALD(.41), ENG. MAH(.45), CHERRY(.50), MESQ(.65), OAK (.61),TEAK (.55), WALNUT (.55), CYPRESS (.46), SPANISH CEDAR (.41)
6	2	FRAME JAMB STOP **	7/8" x 2-5/8"	DOUG FIR(.51), ALD(.41), ENG. MAH(.45), CHERRY(.50), MESQ(.65), OAK (.61),TEAK (.55), WALNUT (.55), CYPRESS (.46), SPANISH CEDAR (.41)
7g	2	DOOR TOP RAIL **	2-1/4" x 7-1/4"	DOUG FIR(.51), ALD(.41), ENG. MAH(.45), CHERRY(.50), MESQ(.65), OAK (.61),TEAK (.55), WALNUT (.55), CYPRESS (.46), SPANISH CEDAR (.41)
8g	1	DOOR BOTTOM RAIL **	2-1/4" x 11-1/4"	DOUG FIR(.51), ALD(.41), ENG. MAH(.45), CHERRY(.50), MESQ(.65), OAK (.61),TEAK (.55), WALNUT (.55), CYPRESS (.46), SPANISH CEDAR (.41)
9g	4	DOOR STILE **	2-1/4" x 7-1/4"	VGF CORE
13	SEE SCHEDULE	FRAME INSTALLATION SCREWS	1/4" TAPCON (ELCO TEXTRON)	STEEL
14	AS REQD	Q-LON SEAL	PROFILE .580 x .336	SCHLEGEL #QDS-650
14A	AS REQD	EXTRUDED FABRIC COATED FOAM	-------	AT FRAME SILL WEATHERSTRIP ADAPTER
15	1	ALUMINUM THRESHOLD	SEE SHEET13	PEMKO #165DV48
16	AS REQD	Q-LON SEAL	PROFILE .335 x .336	SCHLEGEL #QEZ-320
17	AS REQD	WEATHERSTRIP	.665 x .850	PVC (PELLA 09L60093)
18	10 OR 8 (SEE REMARKS)	HINGES	5" x 5" x 12 GAGE	MARK STANLEY FBB179 (USE 10 HINGES @ REGULAR & EYEBROW DOORS & USE 8 HINGES AT ARCH DOOR)
19	1	T-ASTRAGAL	1-7/8" x 3-3/8"	DOUG FIR(.51), ALD(.41), ENG. MAH(.45), CHERRY(.50), MESQ(.65), OAK (.61),TEAK (.55), WALNUT (.55), CYPRESS (.46), SPANISH CEDAR (.41)
20	AS REQD	GLASS STOP MOULDING	9/16" x 3/4"	DOUG FIR(.51), ALD(.41), ENG. MAH(.45), CHERRY(.50), MESQ(.65), OAK (.61),TEAK (.55), WALNUT (.55), CYPRESS (.46), SPANISH CEDAR (.41)
21	(2) @ 10" O.C.	STEEL NAILS	16ga. x 1-1/2" T-NAIL	CRAFTSMEN IN WOOD
22	1	SCHLAGE DEADBOLT	2-5/8" DIA.	SCHLAGE #660, LOCATED AT 48 1/4" FROM BOTTOM OF ACTIVE PANEL LOCK STILE FASTENED W/ (2)#6-32x1/4" OVAL HEAD MACHINE SCREWS W/ 2 3/4" LONG SURFACE MOUNT METALLIC STRIKE PLATE AT INACTIVE PANEL LOCK STILE FASTENED W/ (2)#8x3/4" F.H. S.M.S.
23	4	SURFACE BOLT	15/16" x 12"	ROCKY MOUNTAIN HARDWARE , LOCATED ONE AT TOP & BOTTOM OF EACH PANEL LOCK STILE. SEE SHEET 14
24g	2	DOOR LOCK (INTERMEDIATE) RAIL **	2-1/4" x 7-1/4"	DOUG FIR(.51), ALD(.41), ENG. MAH(.45), CHERRY(.50), MESQ(.65), OAK (.61),TEAK (.55), WALNUT (.55), CYPRESS (.46), SPANISH CEDAR (.41)
25	1	WEATHERSTRIP T-AST	3/4" x 7/8"	PVC PELLA 092R0094
26	1	WEATHERSTRIP T-AST	1/8" x 7/16"	GV 22-B MT
27	2	IMPACT RESISTANT GLASS	9/16" x VARIES	0.542" OVERALL THICKNESS LAMINATED GLASS, 1/4" TEMPERED + 0.090" INTERLAYER SAFLEX IIIG BY SOLUTIA INC. + 1/4" TEMPERED BY ARCH ALUMINUM & GLASS COMPANY
28	AS REQD	GLAZING SEALANT	-------	DOW CORNING 995
29	1	ASTRAGAL CAP	1-1/8" x 1-7/8"	DOUG FIR(.51), ALD(.41), ENG. MAH(.45), CHERRY(.50), MESQ(.65), OAK (.61),TEAK (.55), WALNUT (.55), CYPRESS (.46), SPANISH CEDAR (.41)
30	1	STEEL PLATE	1/8" x 4" x 14" or 17" (SEE REMARKS)	Craftsmen In Wood, # 4141 hot rolled steel plate w/ rust-oleum stops (rust hammered metal finish). Valid only for double doors. See sheet 13
30A	1	STEEL PLATE	1/8" x 4" x 7 1/2" or 9" (SEE REMARKS)	Craftsmen In Wood, # 4141 hot rolled steel plate w/ rust-oleum stops (rust hammered metal finish). Valid only for single doors. See sheet 13
31	8" o.c.	TRIM SCREW	#6 x 1-5/8"	STEEL F.H. WOOD SCREWS
32	AS REQD	WOOD PLUG	5/8"Ø x1-5/8"	DOOR SPECIES

NOTES:
** SEE CONNECTION DETAILS AT ENDS ON SHEET 14

PRODUCT REVIEWED as complying with the Florida Building Code
Acceptance No. 12-0308.43
Expiration Date 7/17/13
By Ishaq I. Chanda
Miami-Dade Product Control

FLORIDA BUILDING CODE (HIGH VELOCITY HURRICANE ZONE)

WALTER A. TILLIT JR LICENSE No. 44167 STATE OF FLORIDA PROFESSIONAL ENGINEER
P.E. SEAL, SIGNATURE, DATE

© 2011 TILTECO INC.

TILTECO INC.
TILLIT TESTING & ENGINEERING COMPANY
6355 N.W. 36th St., Ste.305, VIRGINIA GARDENS, FL 33166
Phone : (305)871-1530 . Fax : (305)871-1531
e-mail: tilteco@aol.com
EB-0006719
WALTER A. TILLIT Jr., P.E.
FLORIDA Lic. 44167

DOUBLE & SINGLE OUT-SWING GLASS ENTRANCE DOORS

Craftsmen In Wood, Mfg.
5441 West Hadley St., Phoenix, AZ 85043
Phone: (602) 296-1050 Fax: (602) 296-1052

REV. NO	DESCRIPTION	DATE	REV. No	DESCRIPTION	DATE
1	OLD 05-011	12/07/11	3		
2			4		

L.G./M.C.V./A.G. DRAWN BY
12/07/11 DATE
11-227 DRAWING No

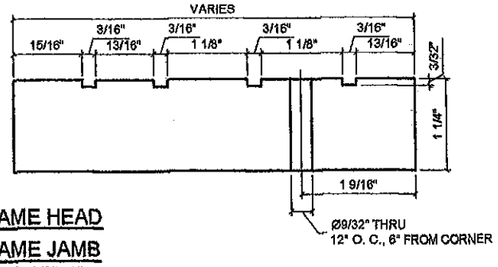

(1) FRAME HEAD
(3) FRAME JAMB
SCALE: 1/2"=1"

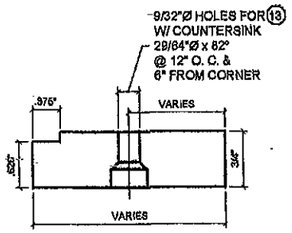

(4) FRAME HEAD STOP
(6) FRAME JAMB STOP
SCALE: 1/2"=1"

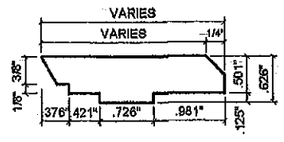

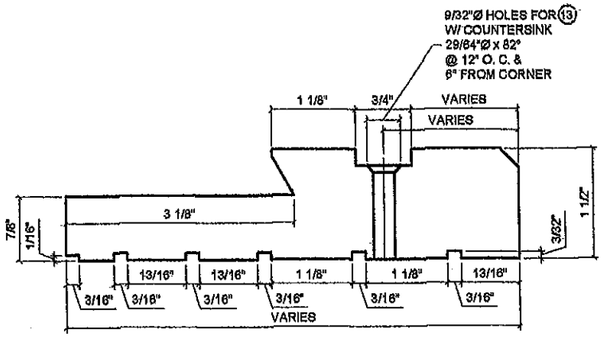

(2) SILL
SCALE: 1/2"=1"

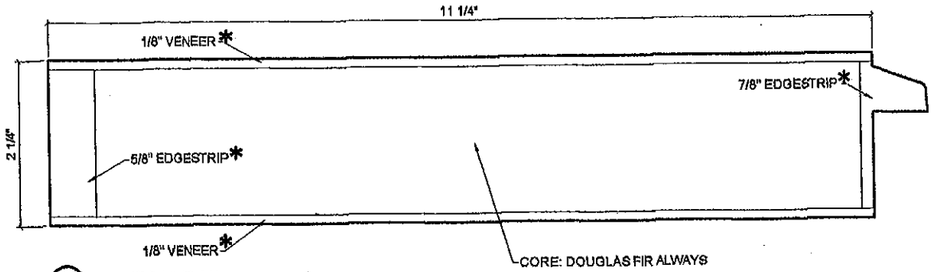

(8g) BOTTOM RAIL
SCALE: 1/2"=1"

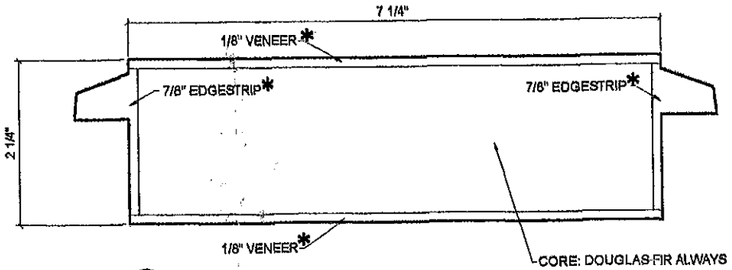

(24g) DOOR LOCK (INTERMEDIATE) RAIL
SCALE: 1/2"=1"

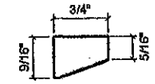

(31) GLASS STOP MOULDING
SCALE: 1/2"=1"

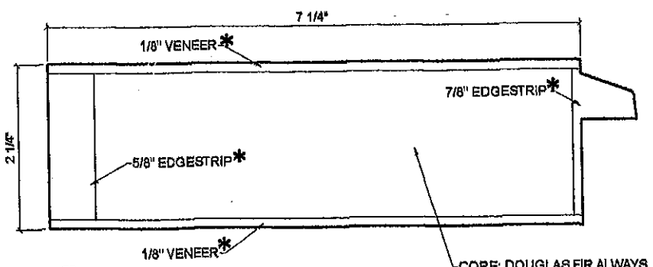

(7g) TOP RAIL

(9g) STILE
SCALE: 1/2"=1"

* NOTE: VENNER'S & EDGESTRIP'S WOOD TYPE: ALD(.41) & ENG. MAH(.45)

PRODUCT REVISED
as complying with the Florida Building Code
Acceptance No. 12-0308.43
Expiration Date 7/17/13
By Ishaq I. Chanda
Miami Date/Product Control

WALTER A. TILLIT JR. LICENSE No. 44167 STATE OF FLORIDA PROFESSIONAL ENGINEER
SEAL / SIGNATURE / DATE

FLORIDA BUILDING CODE (HIGH VELOCITY HURRICANE ZONE)

© 2011 TILTECO INC.

TILTECO INC.
TILLIT TESTING & ENGINEERING COMPANY
6355 N.W. 36th. St., Ste.305, VIRGINIA GARDENS, Fl. 33166
Phone : (305)871-1530 , Fax : (305)871-1531
e-mail: tilteco@aol.com
EB-0006719
WALTER A. TILLIT Jr., P.E.
FLORIDA Lic. 44167

DOUBLE & SINGLE OUT-SWING GLASS ENTRANCE DOORS

L.G./M.C.V./A.G. DRAWN BY

Craftsmen In Wood, Mfg.
5441 West Hadley St., Phoenix, AZ 85043
Phone: (602) 296-1050 Fax: (602) 296-1052

12/07/11 DATE

11-227 DRAWING No

REV. NO	DESCRIPTION	DATE	REV. No	DESCRIPTION	DATE
1	OLD 08-011	12/07/11	3		
2			4		

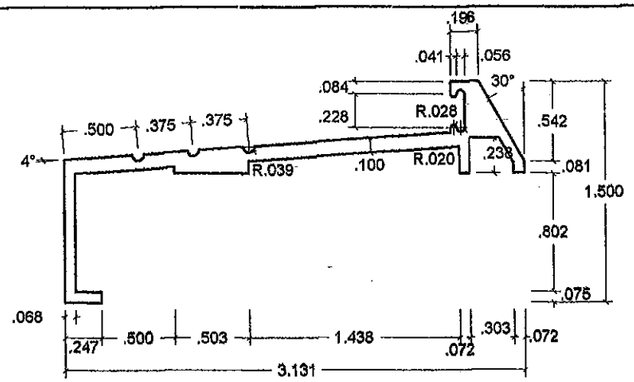

(15) THRESHOLD PEMKO P/N 165DV48

Material: Aluminum alloy 6063-T6

N.T.S.

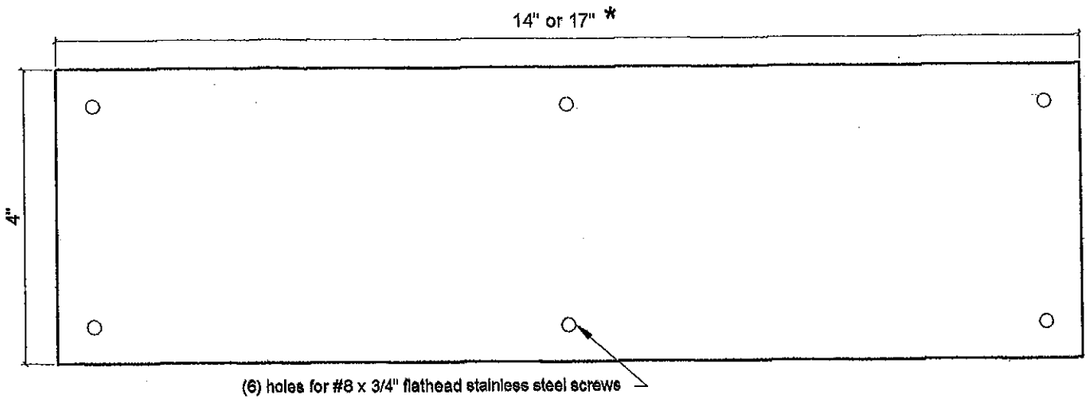

(30) STEEL PLATE @ DOUBLE DOOR

NOTE: Attach steel plate to frame sill with (6) #8 x 3/4" flathead stainless steel screws

SCALE: 1/2"=1"

* 17" REQ'D. FOR REGULAR DOUBLE DOOR.
14" REQ'D. FOR EYEBROW OR ARCH DOUBLE DOORS

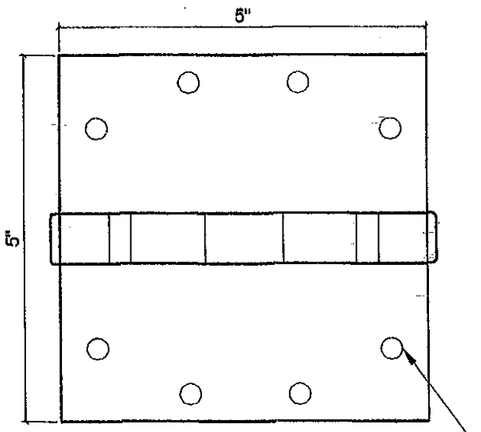

(18) HINGE

NOTE: Attach hinge to door & jamb with (8) #12 x 1-1/4" wood screws

SCALE: 1/2"=1"

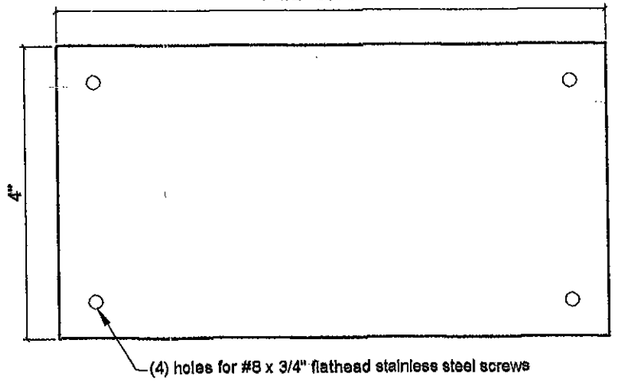

(30A) STEEL PLATE @ SINGLE DOOR

NOTE: Attach steel plate to frame sill with (4) #8 x 3/4" flathead stainless steel screws

SCALE: 1/2"=1"

** 9" REQ'D. FOR REGULAR SINGLE DOOR.
7 1/2" REQ'D. FOR EYEBROW OR ARCH SINGLE DOORS.

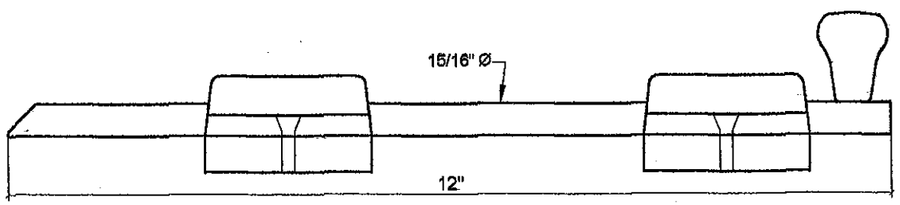

(23) SURFACE BOLT

SCALE: 1/2"=1"

PRODUCT REVISED
as complying with the Florida
Building Code
Acceptance No 12-0308.43
Expiration Date 7/12/13
By Ishaq I. Lhanda
Miami Dade Product Control

FLORIDA BUILDING CODE (HIGH VELOCITY HURRICANE ZONE)

WALTER A. TILLIT JR. LICENSE No. 44167 STATE OF FLORIDA PROFESSIONAL ENGINEER
SEAL/SIGNATURE/DATE

© 2011 TILTECO INC.

TILTECO INC.
TILLIT TESTING & ENGINEERING COMPANY
6355 N.W. 36th. St., Ste.305, VIRGINIA GARDENS, Fl 33166
Phone : (305)871-1530 . Fax : (305)871-1531
e-mail: tilteco@aol.com
EB-0006719
WALTER A. TILLIT Jr., P.E.
FLORIDA Lic. 44167

DOUBLE & SINGLE OUT-SWING GLASS ENTRANCE DOORS

L.G./M.C.V./A.G. DRAWN BY

Craftsmen In Wood, Mfg.
6441 West Hadley St., Phoenix, AZ 85043
Phone: (602) 296-1050 Fax: (602) 296-1052

12/07/11 DATE

11-227 DRAWING No

SHEET 13 OF 14

REV. NO	DESCRIPTION	DATE	REV. No	DESCRIPTION	DATE
1	OLD 08-011	12/07/11	3		
2			4		

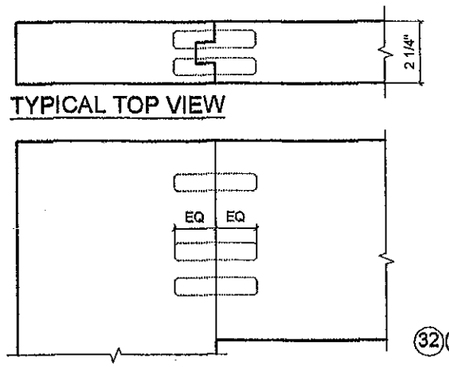

TYPICAL TOP VIEW

TOP CORNER DETAIL - ELEVATION

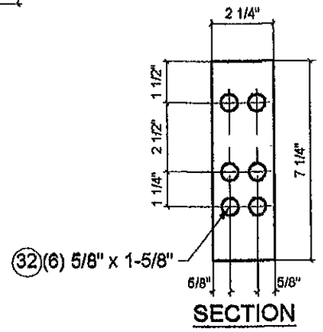

SECTION

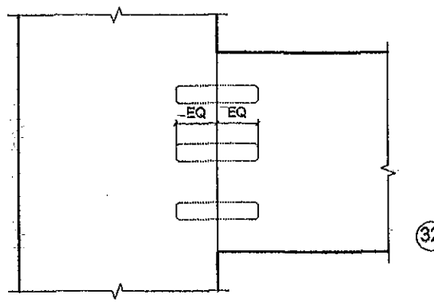

INTERMEDIATE DETAIL - ELEVATION

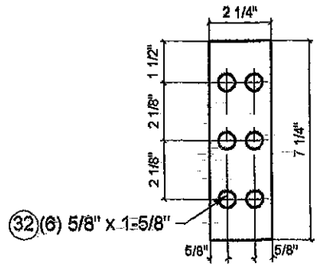

SECTION

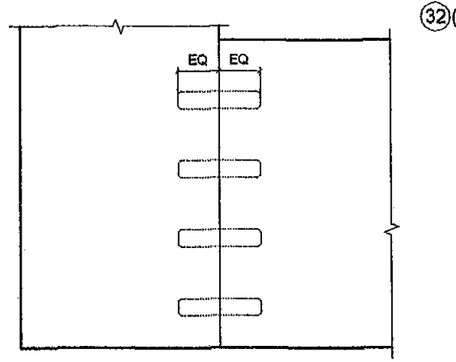

BOTTOM CORNER DETAIL - ELEVATION

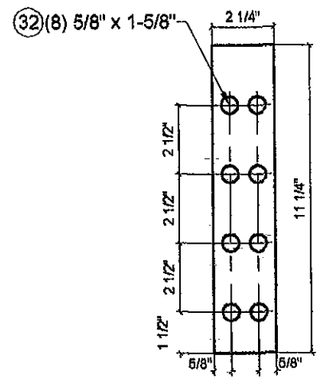

SECTION

SASH CORNER DETAILS FOR DOOR

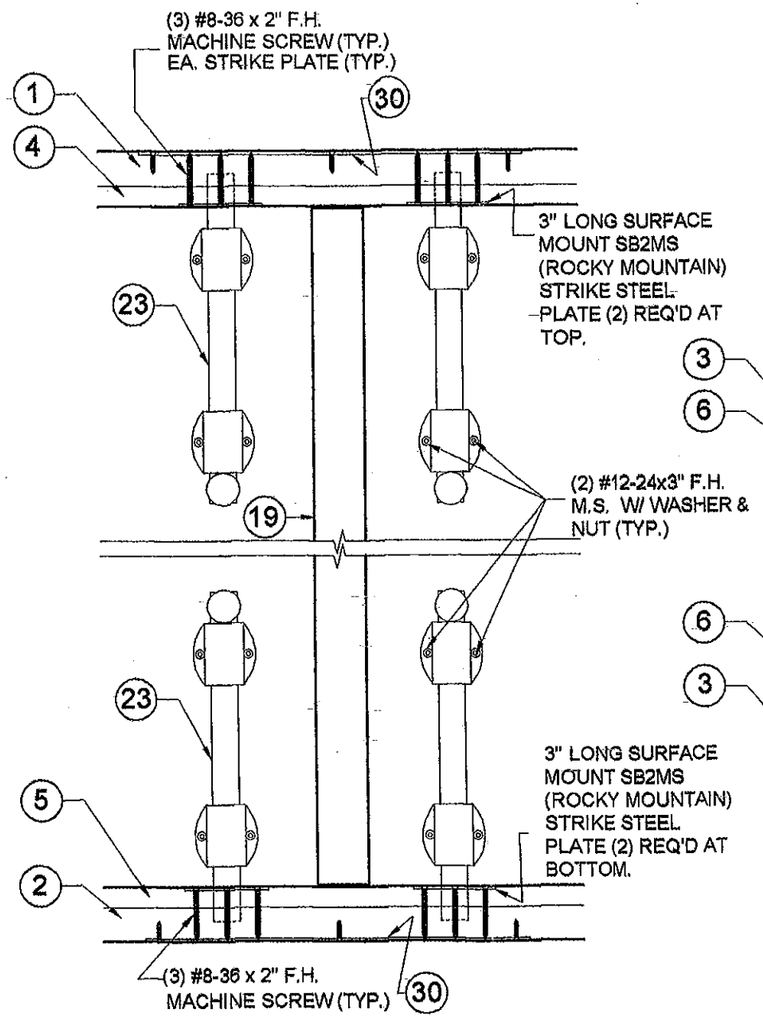

DOUBLE DOORS

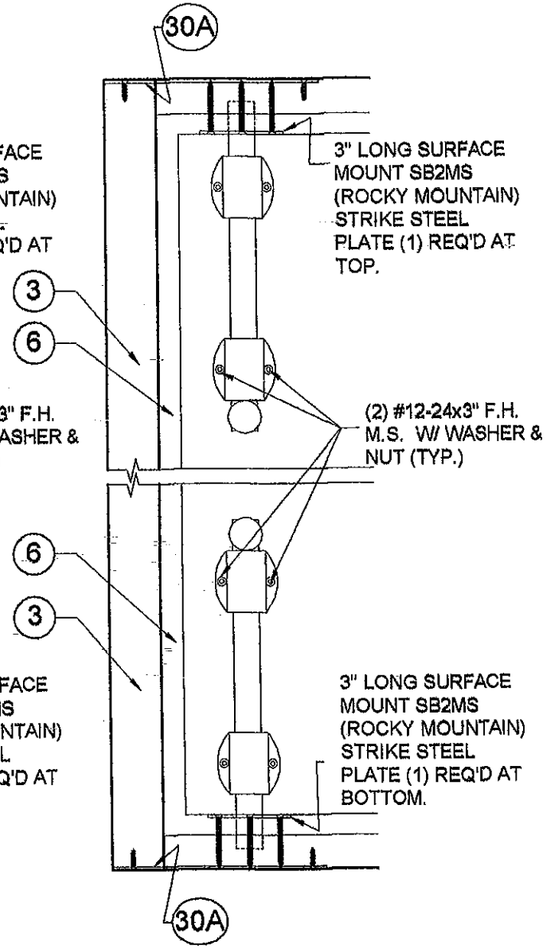

SINGLE DOORS

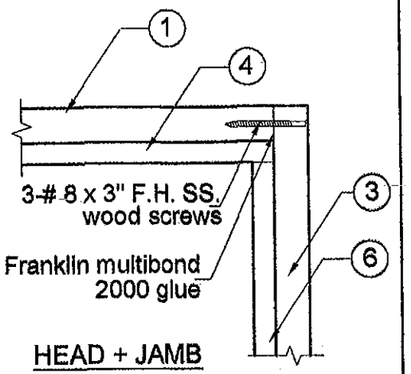

HEAD + JAMB

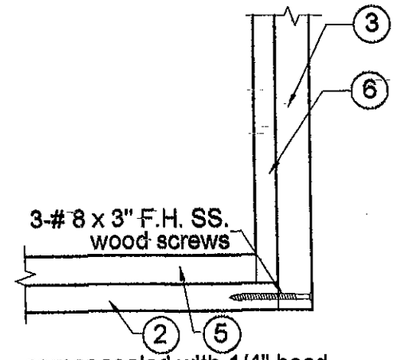

JAMB + SILL

FRAME CORNER DETAILS

FRAME DETAIL @ STEEL PLATES
& SURFACE BOLT W/ STRIKES

PRODUCT REVISED
as complying with the Florida Building Code
Acceptance No 12-0308.43
Expiration Date July 12, 2013
Miami-Dade Product Control

FLORIDA BUILDING CODE (HIGH VELOCITY HURRICANE ZONE)

WALTER A. TILLIT JR. LICENSE NO 44167 STATE OF FLORIDA P.E. SEAL / SIGNATURE / DATE PROFESSIONAL ENGINEER

© 2011 TILTECO INC.

TILTECO INC.
TILLIT TESTING & ENGINEERING COMPANY
6355 N.W. 36th. St., Ste.305, VIRGINIA GARDENS, FL 33166
Phone : (305)871-1530 . Fax : (305)871-1531
e-mail: tilteco@aol.com
EB-0006719
WALTER A. TILLIT Jr., P.E.
FLORIDA Lic. 44167

DOUBLE & SINGLE OUT-SWING GLASS ENTRANCE DOORS

L.G./M.C.V./A.G. DRAWN BY

Craftsmen In Wood, Mfg.
5441 West Hadley St., Phoenix, AZ 85043
Phone: (602) 296-1050 Fax: (602) 296-1052

12/07/11 DATE

11-227 DRAWING No

REV. NO	DESCRIPTION	DATE	REV. NO	DESCRIPTION	DATE
1	OLD 08-011	12/07/11	3		
2			4		

SHEET 14 OF 14