MIAMI-DADE COUNTY
DEPARTMENT OF PERMITTING, ENVIRONMENT, AND REGULATORY AFFAIRS (PERA)
BOARD AND CODE ADMINISTRATION DIVISION

MIAMI-DADE COUNTY
PRODUCT CONTROL SECTION
11805 SW 26 Street, Room 208
Miami, Florida 33175-2474
T (786) 315-2590 F (786) 315-2599
www.miamidade.gov/pera

NOTICE OF ACCEPTANCE (NOA)

Hurricane Protecting Industries, LLC
3301 SW 13th Drive
Deerfield Beach, FL 33442

SCOPE:

This NOA is being issued under the applicable rules and regulations governing the use of construction materials. The documentation submitted has been reviewed and accepted by Miami-Dade County PERA - Product Control Section to be used in Miami Dade County and other areas where allowed by the Authority Having Jurisdiction (AHJ).

This NOA shall not be valid after the expiration date stated below. The Miami-Dade County Product Control Section (In Miami Dade County) and/or the AHJ (in areas other than Miami Dade County) reserve the right to have this product or material tested for quality assurance purposes. If this product or material fails to perform in the accepted manner, the manufacturer will incur the expense of such testing and the AHJ may immediately revoke, modify, or suspend the use of such product or material within their jurisdiction. PERA reserves the right to revoke this acceptance, if it is determined by Miami-Dade County Product Control Section that this product or material fails to meet the requirements of the applicable building code.

This product is approved as described herein, and has been designed to comply with the Florida Building Code, including the High Velocity Hurricane Zone.

DESCRIPTION: Series "HPI 1000" Aluminum Storefront System – S. M. I.

APPROVAL DOCUMENT: Drawing No. **12-020.1**, titled "HPI 1000 SM Series Aluminum Storefront", sheets 1 through 12 of 12, dated 07/06/12, prepared by EngCo, Inc., signed and sealed by Pedro M. De Figueiredo, P.E., bearing the Miami-Dade County Product Control Revision stamp with the Notice of Acceptance number and expiration date by the Miami-Dade County Product Control Section.

MISSILE IMPACT RATING: Small Missile Impact Resistant

LABELING: Each unit shall bear a permanent label with the manufacturer's name or logo, city, state, model/series, and following statement: "Miami-Dade County Product Control Approved", unless otherwise noted herein.

RENEWAL of this NOA shall be considered after a renewal application has been filed and there has been no change in the applicable building code negatively affecting the performance of this product.

TERMINATION of this NOA will occur after the expiration date or if there has been a revision or change in the materials, use, and/or manufacture of the product or process. Misuse of this NOA as an endorsement of any product, for sales, advertising or any other purposes shall automatically terminate this NOA. Failure to comply with any section of this NOA shall be cause for termination and removal of NOA.

ADVERTISEMENT: The NOA number preceded by the words Miami-Dade County, Florida, and followed by the expiration date may be displayed in advertising literature. If any portion of the NOA is displayed, then it shall be done in its entirety.

INSPECTION: A copy of this entire NOA shall be provided to the user by the manufacturer or its distributors and shall be available for inspection at the job site at the request of the Building Official.

This NOA **revises NOA# 10-0601.01** and consists of this page 1 and evidence pages E-1 and E-2, as well as approval document mentioned above.

The submitted documentation was reviewed by **Manuel Perez, P.E.**

MIAMI-DADE COUNTY APPROVED

7/20/12

NOTICE OF ACCEPTANCE: EVIDENCE SUBMITTED

A. DRAWINGS

1. Manufacturer's die drawings and sections.
2. Drawing No **12-020.1**, Sheets 1 through 12 of 12, titled "HPI 1000 SM Series Aluminum Storefront", dated 07/06/12, prepared by EngCo, Inc., signed and sealed by Pedro M. De Figueiredo, P.E.

B. TESTS

1. Test reports on: 1) Air Infiltration Test, per TAS 202-94
   2) Uniform Static Air Pressure Test, Loading per TAS 202-94
   3) Water Resistance Test, per TAS 202-94
   4) Large Missile Impact Test per, 201-94
   5) Large Missile Impact Test per, 201-94
   6) Cyclic Wind Pressure Loading per FBC, TAS 203-94

   along with marked-up drawings and installation diagram of an aluminum fixed window, prepared by Hurricane Test Laboratory, LLC, Test Report No. **HTL-0314-1112.04, specimens #9, #10, #11, and #12**, dated 11/22/04-03/02/05, signed and sealed by Vinu J. Abraham, P.E.
   (Submitted under previous NOA# 10-0601.01)

C. CALCULATIONS

1. Anchor verification calculations and structural analysis, complying with FBC-2007, prepared by EngCo, Inc., dated 05/18/10 and revised on 08/26/10, signed and sealed by Pedro M. De Figueiredo, P.E.
   (Submitted under previous NOA# 10-0601.01)
2. Glazing complies with ASTM E1300-04

D. QUALITY ASSURANCE

1. Miami-Dade Department of Permitting, Environment, and Regulatory Affairs (PERA)

E. MATERIAL CERTIFICATIONS

1. Notice of Acceptance No. **11–0325.05** issued to Solutia, Inc. for their "**Saflex and Vanceva clear and color interlayers**" dated 05/05/11, expiring on 05/21/16

Manuel Perez, P.E.
Product Control Examiner
NOA No. 12-0312.08
Expiration Date: October 13, 2015
Approval Date: July 26, 2012

NOTICE OF ACCEPTANCE: EVIDENCE SUBMITTED

F. STATEMENTS

1. Statement letter of conformance complying with FBC 2010, and of no financial interest, dated February 01, 2012, signed and sealed by Pedro M. De Figueiredo, P.E.
2. Laboratory compliance letter for Test Reports No. **HTL-0314-1112-04** and **HTL-0314-0405-05**, issued by Hurricane Test Laboratory, LLC, dated 07/26/05, signed and sealed by Vinu J. Abraham, P.E.
   (Submitted under previous NOA# 10-0601.01)
3. Asset Purchase Agreement dated May 31, 2012, between Hurricane Protection Industries, LLC along with Hurricane Manufacturing Company, LLC as sellers and Hurricane Protecting Industries, LLC as buyer, signed by Mr. Jeffry Robinson and Mr. Raymond Crawford.
4. Certificate of Conversion dated October 27, 2011, signed by Terri G Kibler, converting **Hurricane Manufacturing Corporation, Inc.** into **Hurricane Manufacturing Company, LLC,** filed with the State of Florida on December 08, 2011.
5. Department of State Certification of **HURRICANE MANUFACTURING COMPANY, LLC** as a limited liability company, active and organized under the laws of the State of Florida, dated December 09, 2011 and signed by Kurt S. Browning, Secretary of State.

G. OTHER

1. Notice of Acceptance No. **10-0601.01**, issued to Hurricane Manufacturing Corporation for their Series "HMC 1000" Aluminum Storefront System – S.M.I., approved on 10/12/10 and expiring on 10/12/15.

Manuel Perez, P.E.
Product Control Examiner
NOA No. 12-0312.08
Expiration Date: October 13, 2015
Approval Date: July 26, 2012

TABLE OF CONTENTS:

SHEET	DESCRIPTION
1	GENERAL NOTES, TABLE OF CONTENTS, WINDOW CONFIGURATIONS
2	TYPE I - SINGLE PANEL UNITS
3	TYPE II - COMBINED SINGLE PANEL UNITS
4	TYPE III - MULTIPLE PANEL UNITS
5	GLAZING CONFIGURATIONS AND DESIGNED LOADS
6	SECTIONS DETAILS
7	FRAMING ANCHORAGE OPTIONS
8	TYPE I - ANCHORAGE DESIGN
9	TYPE II - ANCHORAGE DESIGN
10	TYPE III - ANCHORAGE DESIGN
11	WINDOW COMPONENTS, FRAME ASSEMBLY
12	FRAME ASSEMBLY

GENERAL NOTES:

FLORIDA BUILDING CODE 2010 HVHZ
SMALL MISSILE IMPACT RATED

1- CODE: THIS PRODUCT HAS BEEN TESTED AND DESIGNED IN ACCORDANCE WITH THE FBC 2010 INCLUDING THE HIGH VELOCITY HURRICANE ZONE (HVHZ) - TAS 201 (SMALL MISSILE), TAS 202 AND TAS 203.

2- DEFINITION: THIS PRODUCT IS AN ALUMINUM FIXED TYPE WINDOW WITH SMALL MISSILE IMPACT RESISTANT LAMINATED GLASS. HURRICANE IMPACT PROTECTION IS REQUIRED FOR INSTALLATIONS UP TO 30 FEET OF GRADE. NO PROTECTION IS REQUIRED ABOVE 30 FEET.

3- POSTING: PRODUCT SHALL BE LABELED AS PER FBC 2010. THE PERMANENT LABEL, MARKING OR ETCHING SHALL PROVIDE TRACEABILITY TO THE MANUFACTURER AND PRODUCT. SAMPLE LABEL:

> "HURRICANE PROTECTING INDUSTIRES LLC
> MIRAMAR - BROWARD COUNTY - FLORIDA
> HPI-1000 SM SERIES - SMALL MISSILE IMPACT RATED
> MIAMI-DADE PRODUCT CONTROL APPROVED

4- LOADS: DESIGNED LOAD CALCULATED BASED ON THE ASCE 7-10 AND PROVIDED BY A PROFESSIONAL ARCHITECT OR ENGINEER FOR EACH SPECIFIC PROJECT. THE CALCULATED DESIGNED PRESSURE MUST NOT EXCEED THE ALLOWABLE PRESSURES HERE IN SPECIFIED. THE DESIGN PRESSURES, AS DETERMINED FROM ASCE 7-10, ARE PERMITTED TO BE MULTIPLE BY 0.6

5- MATERIAL: ALL ALUMINUM PARTS TO BE 6063-T6 OR 6005-T5 ALLOY OR AS NOTED AND GLAZING TO BE LAMINATED IMPACT RESISTANT GLASS AS SPECIFIED ON THIS APPROVAL.

6- FASTENERS: ASSEMBLY SCREWS AND ANCHORS SHALL BE AS SPECIFIED IN THE CURRENT SET OF DRAWINGS.

7- USE: IT SHALL BE THE RESPONSIBILITY OF THE CONTRACTOR, ARCHITECT OR ENGINEER OF RECORD TO VERIFY THE FOLLOWING:
7.1- THE STABILITY OF THE STRUCTURE WHERE THE PRODUCT IS TO BE ATTACHED INSURING PROPER ANCHORAGE.
7.2- THE SITE SPECIFIC PROJECT CRITERIA, SUCH AS BUT NOT LIMITED TO, LOCAL CODE REQUIREMENTS, DESIGNED PRESSURES ETC.
7.3- THAT THIS APPROVAL IS ADEQUATE TO THE SPECIFIC PROJECT.

8- 33 1/3% INCREASE IN ALLOWABLE LOADS HAVE NOT BEEN USED IN THE DESIGN OF THE ANCHORS FOR THIS PRODUCT APPROVAL, HOWEVER, WOOD ANCHORS WITH 1.6 INCREASE FOR WIND LOAD DURATION HAVE BEEN USED.

9- DISSIMILAR MATERIALS: MATERIALS, INCLUDING BUT NOT LIMITED TO STEEL, THAT COME IN CONTACT WITH OTHER DISSIMILAR MATERIALS SHALL MEET THE REQUIREMENTS OF 2010 FLORIDA BUILDING CODE.

WINDOW CONFIGURATIONS

TYPE I
SINGLE PANEL UNITS
SHEET 2

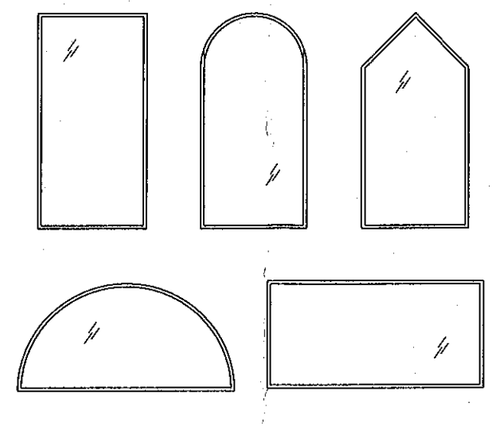

TYPE II
COMBINED SINGLE PANEL UNITS
SHEET 3

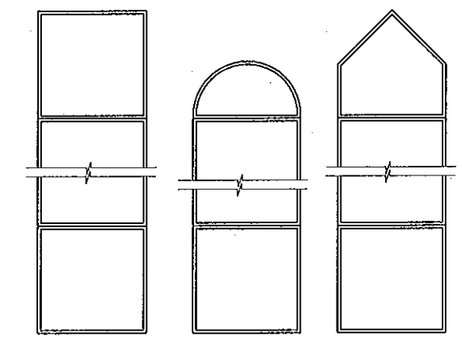

TYPE III
MULTIPLE PANEL UNITS
SHEET 4

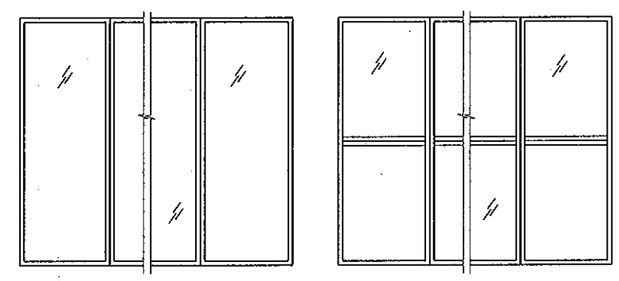

USER INSTRUCTIONS:

1- DETERMINE DESIGN WIND LOAD PRESSURES AS PER ITEM 4 OF GENERAL NOTES.

2- BASED ON THE WINDOW TYPE, CONFIGURATION AND SIZE VERIFY THE FRAMING CAPACITY BY USING THE PROPER TABLES ON SHEETS 2, 3 OR 4.

3- BASED ON TYPE OF GLASS CHECK GLAZING CAPACITY BY USING TABLE 5 ON SHEET 5. GLASS CAPACITY MUST BE GREATER THAN OR EQUAL TO THE CALCULATED PRESSURE.

4- FUNCTION OF THE WINDOW TYPE USE SHEETS 7, 8, 9 OR 10 TO SELECT AND DESIGN THE PROPER FRAMING ANCHORAGE.

MAXIMUM PRESSURE MUST NOT EXCEED 130 PSF
MAXIMUM GLAZING DLO AREA MUST NOT EXCEED: 45.6 SQF
LARGE & SMALL MISSILE IMPACT RATED

HPI
HURRICANE PROTECTING INDUSTRIES LLC
3301 SW 13th DRIVE
DEERFIELD BCH, FL 33442
Phone: (954) 392-7933
Fax: (954) 392-7356

PRODUCT:
HPI 1000
SM SERIES
ALUMINUM STOREFRONT

Engineering:
EngCo Inc.
CA 8116
5595 Orange Dr. 201
Davie, Fl. 33314
Tel.: (954) 585-0304
Fax: (954) 585-0305
ENGCO@AOL.COM

PEDRO DE FIGUEIREDO
LICENSE
No. 52609
STATE OF FLORIDA
PROFESSIONAL ENGINEER

JUL 06 2012

Engineer Seal
Pedro De Figueiredo
PE 52609

MIAMI-DADE BCCO:

PRODUCT REVISED
as complying with the Florida Building Code
Acceptance No 12-0312.08
Expiration Date 03.13.2015
By Manuel Perez
Miami Dade Product Control

Date: 07/06/12
Scale: NA
Design by: PPMF

Drawing Number
12-020.1

TYPE I - SINGLE PANEL UNITS

TABLE 1
ALLOWABLE MODULE PRESSURE
FOR SINGLE PANELS

A (IN)	B (IN)	GLAZING TYPE A1	GLAZING TYPE B1
48	48	130	130
	60	130	130
	72	130	130
	84	130	130
	96	130	130
	108	130	130
	120	129	128
	144	118	117
50	60	130	130
	72	130	130
	84	130	130
	96	130	130
	108	130	130
	120	122	121
	144	111	110
60	60	130	130
	72	130	130
	84	130	130
	96	129	128
	108	114	113
	120	102	101
66	60	130	130
	72	118	118
	84	118	118
	96	118	118
	109	104	103
72	60	130	130
	72	108	108
	84	108	108
	96	108	108
	100	108	107
84	60	130	130
	72	108	108
	85	93	93
96	60	129	128
	72	108	108
	75	104	104
108	60	114	113
	67	104	103
120	60	102	101

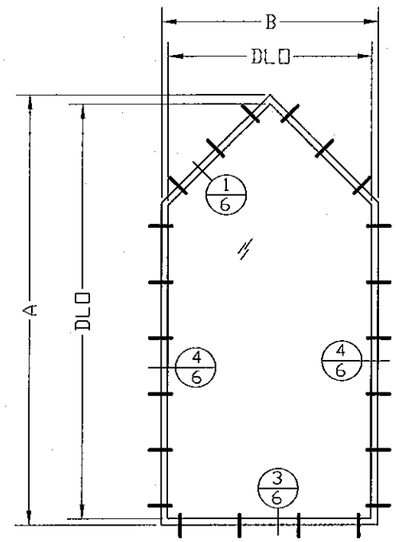

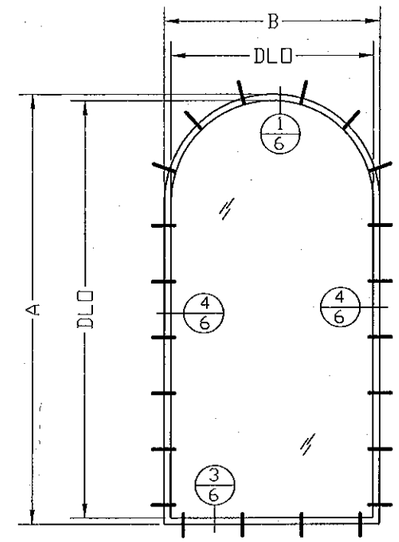

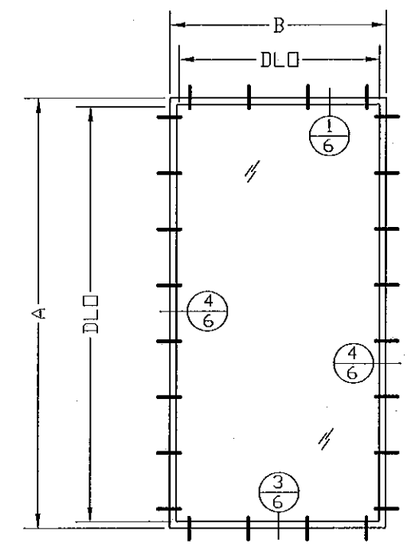

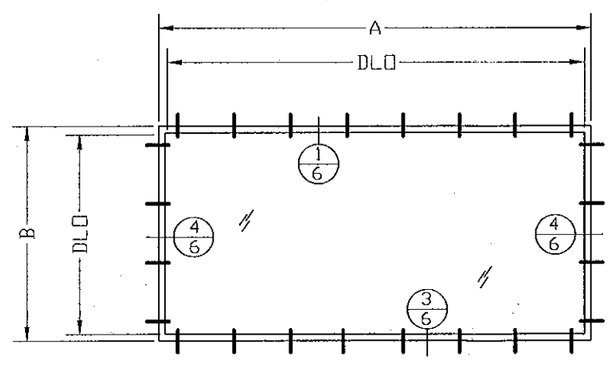

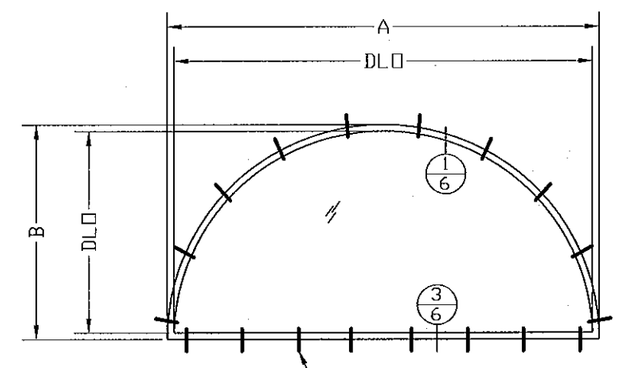

TYPICAL ANCHORS
SEE SHEETS 7 AND 8
FOR MORE DETAILS

EXAMPLE: PdK= 108 PSF
MODULAR SIZE: 96X72
GLASS TYPE B1: MAX. 108 PSF (TABLE 1)

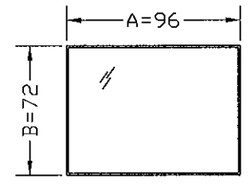

WINDOW TYPE I NOTES:
1- SEE SHEET 5 FOR GLAZING COMPOSITION
2- USE SHEETS 7 AND 8 TABLE 1.1 FOR ANCHORAGE DESIGN
3- ALL SHAPES CAN BE INSTALLED ROTATED

HPI
HURRICANE PROTECTING INDUSTRIES LLC
3301 SW 13th DRIVE
DEERFIELD BCH, FL 33442
Phone: (954) 392-7933
Fax: (954) 392-7356

PRODUCT:
HPI 1000
SM SERIES
ALUMINUM STOREFRONT

Engineering:
EngCo Inc.
CA 8116
5595 Orange Dr. 201
Davie, Fl. 33314
Tel.: (954) 585-0304
Fax: (954) 585-0305
EMail: PEDRO@ENGCO.NET

PEDRO DE FIGUEIREDO
No. 52609
STATE OF FLORIDA
PROFESSIONAL ENGINEER

Engineer Seal
Pedro De Figueiredo
PE 52609

JUL 06 2012

MIAMI-DADE BCCO:

PRODUCT REVISED
as complying with the Florida Building Code
Acceptance No 12-0312.08
Expiration Date Oct. 13, 2015
By Manuel Perez
Miami Dade Product Control

Date: 07/06/12
Scale: NA
Design by: PPMF

Drawing Number
12-020.1

SHEET
2 of 12

TYPE II - COMBINED SINGLE PANEL UNITS

TABLE 2
ALLOWABLE MODULE PRESSURE
FOR COMBINED SINGLE PANELS

A (IN)	B (IN)	PRESSURE ± (PSF)
48	48	130
	60	130
	72	102
	84	81
	96	68
	104	61
50	60	130
	72	100
	84	79
	96	66
	104	59
60	60	130
	72	93
	84	72
	96	59
66	60	130
	72	91
	84	70
	93	59
72	60	130
	72	90
	84	68
	91	59
84	60	130
	72	90
	84	66
	86	64
96	60	130
	72	90
	75	83
108	60	130
	67	105
120	60	130
144	50	130

EXAMPLE: Pd<= 90PSF
MODULAR SIZE: 96X72
GLASS TYPE B1: MAX. 108 PSF (TABLE 5)
MULLION SPAN: 72"
PRESSURE: MAX. 90 PSF (TABLE 2)

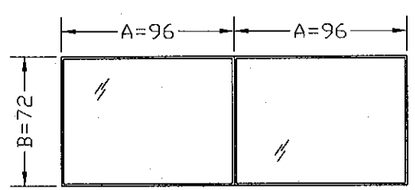

WINDOW TYPE II NOTES:

1- USE SHEET 5 FOR GLAZING COMPOSITION AND GLAZING DESIGN USING TABLE 5

2- USE SHEETS 7, 8 AND 9 TABLES 1.1 AND 2.1 FOR ANCHORAGE DESIGN

3- DIMENSION "B" EQUAL TO MULLION SPAN

VERTICAL MODULAR UNITS

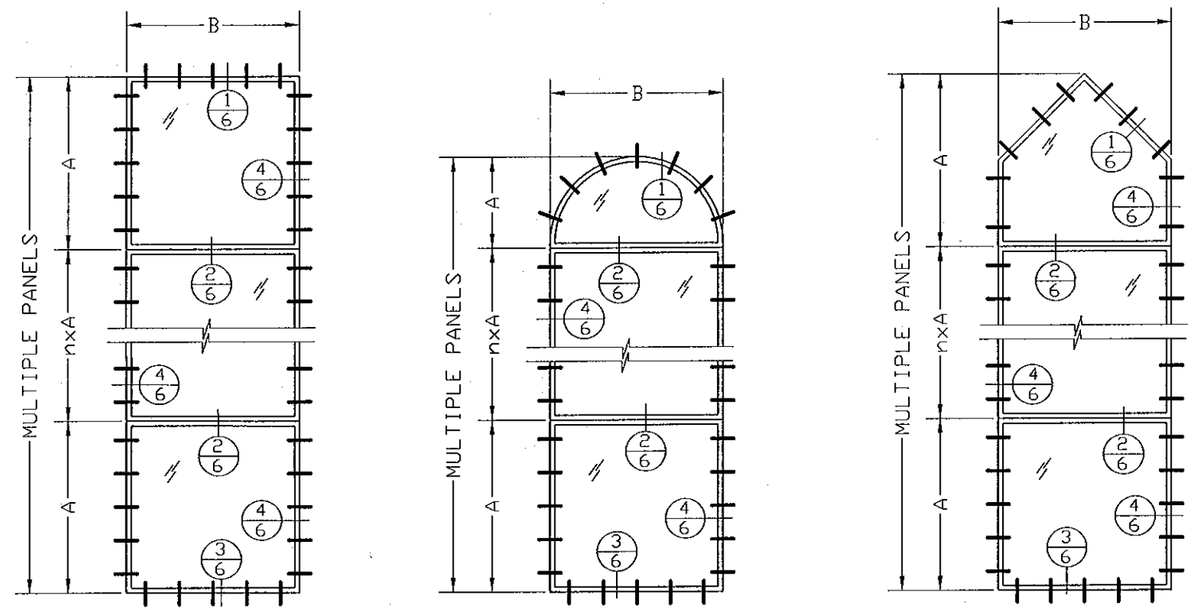

nxA: MULTIPLES "A" PANELS:
n= 1, 2, 3, 4, UNLIMITED

HORIZONTAL MODULAR UNITS

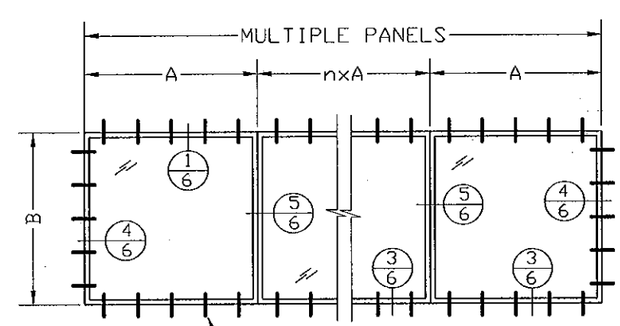

TYPICAL ANCHORS SEE SHEETS 7, 8 AND 9 FOR MORE DETAILS

HPI
HURRICANE PROTECTING INDUSTRIES LLC
3301 SW 13th DRIVE
DEERFIELD BCH, FL 33442
Phone: (954) 392-7933
Fax: (954) 392-7356

PRODUCT:
HPI 1000
SM SERIES
ALUMINUM STOREFRONT

Engineering:
EngCo Inc.
CA 8116
5595 Orange Dr. 201
Davie, Fl. 33314
Tel.: (954) 585-0304
Fax: (954) 585-0305
ENGCO@AOL.COM

PEDRO DE FIGUEIREDO
No. 52609
STATE OF FLORIDA
PROFESSIONAL ENGINEER
Engineer Seal
Pedro De Figueiredo
PE 52609

JUL 06 2012

MIAMI-DADE BCCO:

PRODUCT REVISED
as complying with the Florida Building Code
Acceptance No 12-0312.08
Expiration Date Oct. 13, 2015
By Manuel Perez
Miami Dade Product Control

Date: 07/06/12
Scale: NA
Design by: PPMF

Drawing Number
12-020.1

TYPE III - MULTIPLE PANEL UNITS

TABLE 3
ALLOWABLE MODULE PRESSURE
FOR VERTICAL MULL FRAMING

TW (IN)	FH (IN)	PRESSURE ± (PSF)	G VALUES 50% (IN)	G VALUES 100% (IN)
48	48	130	0.25	0.25
	60	130	0.25	0.25
	72	130	0.25	0.25
	84	130	0.27	0.25
	96	117	0.43	0.28
	104	100	0.52	0.33
50	60	130	0.25	0.25
	72	130	0.25	0.25
	84	130	0.28	0.25
	96	113	0.43	0.28
	104	97	0.52	0.33
60	60	130	0.25	0.25
	72	130	0.25	0.25
	84	124	0.30	0.25
	96	102	0.44	0.28
66	60	130	0.25	0.25
	72	130	0.25	0.25
	84	120	0.30	0.25
	93	102	0.41	0.26
72	60	130	0.25	0.25
	72	130	0.25	0.25
	84	117	0.31	0.25
	91	102	0.38	0.25
84	60	130	0.25	0.25
	72	130	0.25	0.25
	84	114	0.31	0.25
	86	110	0.33	0.25
96	60	130	0.25	0.25
	72	130	0.25	0.25
	75	130	0.25	0.25
108	60	130	0.25	0.25
	67	130	0.25	0.25
120	60	130	0.25	0.25
144	50	130	0.25	0.25

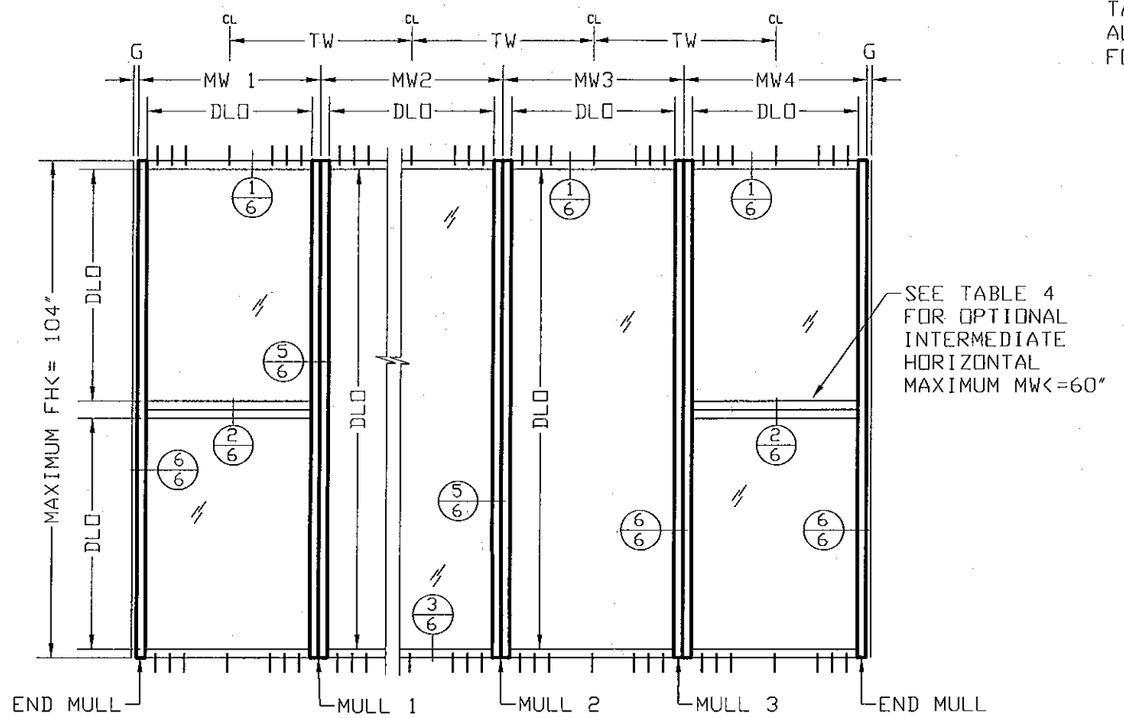

MULL 1: TW= (MW1 + MW2)/2
MULL 2: TW= (MW2 + MW3)/2
END MULL: TW= MW1 AND TW= MW4

OPTIONAL HORIZONTAL TO FIT BETWEEN CONTINUOUS VERTICAL FRAMING

TABLE 4
ALLOWABLE PRESSURE
FOR INTERMEDIATE HORIZONTAL

TM (IN)	MW (IN)	PRESSURE ± (PSF)
36	36	102
	42	102
	48	102
	50	102
	54	96
	56	87
	66	61
42	36	102
	42	102
	48	102
	50	102
	54	87
	56	80
	60	67
48	36	102
	42	102
	48	102
	50	102
	54	82
	56	75
	60	63
52	36	102
	42	102
	48	102
	50	102
	54	81
	56	73
	60	61

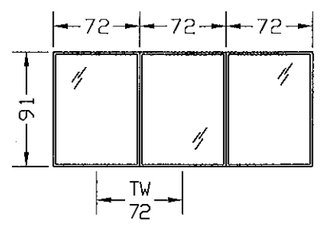

EXAMPLE: Pd<= 102 PSF
MODULAR SIZE: 72X91
GLASS TYPE C1: MAX. 108 PSF (TABLE 5)
MULLION SPAN: 91"
PRESSURE: MAX. 102 PSF
JAMB GAP: >=0.38" SEALANT W/ 50% OR
>=0.25" SEALANT W/ 100% EXTENSION

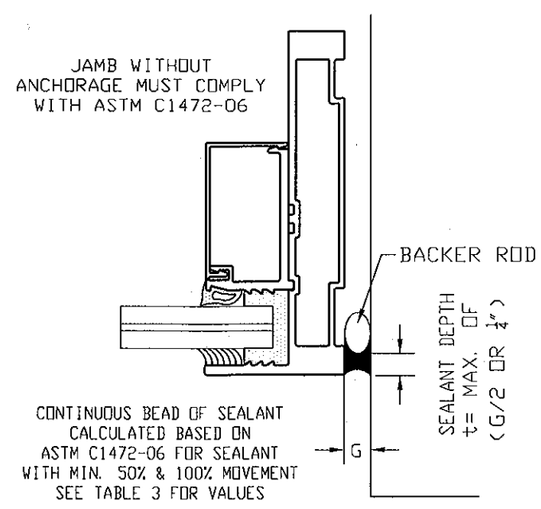

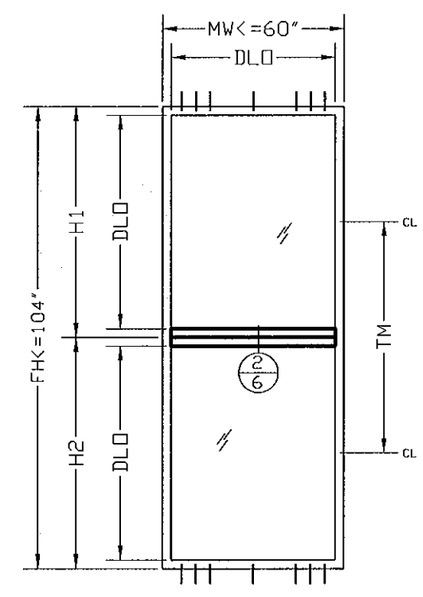

TM= (H1 + H2)/2

WINDOW TYPE III NOTES:

1- USE SHEET 5 FOR GLAZING COMPOSITION AND GLAZING DESIGN USING TABLE 5
2- USE SHEETS 7, 8 AND 10 TABLES 1.1 AND 3.1 FOR ANCHORAGE DESIGN
3- "G" END MULL MINIMUM SEAL SPACE SEE JAMB DETAIL 6. USE VALUES ACCORDINGLY WITH SEALANT ASTM C-719 EXTENSION PROPERTY 50% OR 100% EXTENSION

HPI
HURRICANE PROTECTING INDUSTRIES LLC
3301 SW 13th DRIVE
DEERFIELD BCH, FL 33442
Phone: (954) 392-7933
Fax: (954) 392-7356

PRODUCT:
HPI 1000
SM SERIES
ALUMINUM STOREFRONT

Engineering:
EngCo Inc.
CA 8116
5595 Orange Dr. 201
Davie, Fl. 33314
Tel.: (954) 585-0304
Fax: (954) 585-0305
EngCo@AOL.COM

PEDRO A. DE FIGUEIREDO
LICENSE
No. 52609
STATE OF FLORIDA
PROFESSIONAL ENGINEER

Engineer Seal
Pedro De Figueiredo
PE 52609

JUL 06 2012

MIAMI-DADE BCCO:

PRODUCT REVISED
as complying with the Florida Building Code
Acceptance No 12-0312.08
Expiration Date Oct. 13, 2015
By Manuel Seoane
Miami Dade Product Control

Date: 07/06/12
Scale: NA
Design by: PPMF

Drawing Number
12-020.1

SHEET
4 of 12

GLAZING CONFIGURATIONS & DESIGNED LOADS

TABLE 5
ALLOWABLE PRESSURE
GLAZING PANEL

A (IN)	B (IN)	GLAZING TYPE A1	GLAZING TYPE B1
48	48	130	130
	60	130	130
	72	130	130
	84	130	130
	96	130	130
	108	130	130
	120	129	128
	144	118	117
50	60	130	130
	72	130	130
	84	130	130
	96	130	130
	108	130	130
	120	122	121
	144	111	110
60	60	130	130
	72	130	130
	84	130	130
	96	129	128
	108	114	113
	120	102	101
66	60	130	130
	72	118	118
	84	118	118
	96	118	118
	109	104	103
72	60	130	130
	72	108	108
	84	108	108
	96	108	108
	100	108	107
84	60	130	130
	72	108	108
	85	93	93
96	60	129	128
	72	108	108
	75	104	104
108	60	114	113
	67	104	103
120	60	102	101

USE IN CONJUNCTION WITH TABLES 1, 2, 3 OR 4
DESIGN MUST BE CONTROLLED BY THE LOWEST
PRESSURE FROM APPLICABLE TABLES

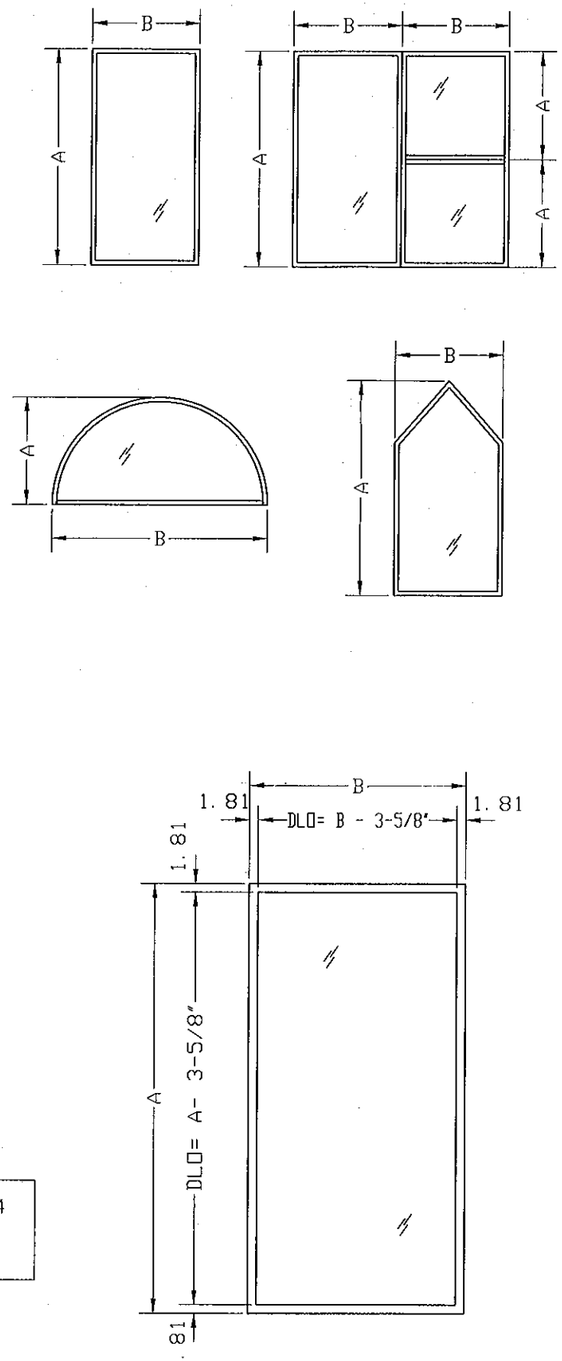

TYPE A - 9/16" LAMINATED IMPACT GLASS

TYPE	MANUFACTURER	INTERLAYER	IMPACT CLASSIFICATION
A1	SOLUTIA	.06" PVB	SMALL MISSILE

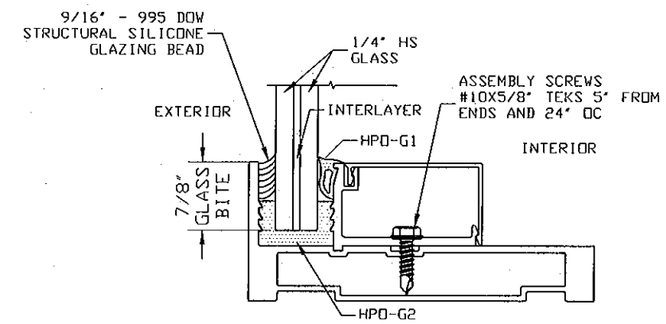

TYPE B - 1 5/16" LAM. INSULATED IMPACT GLASS

TYPE	MANUFACTURER	INTERLAYER	IMPACT CLASSIFICATION
B1	SOLUTIA	.06" PVB	SMALL MISSILE

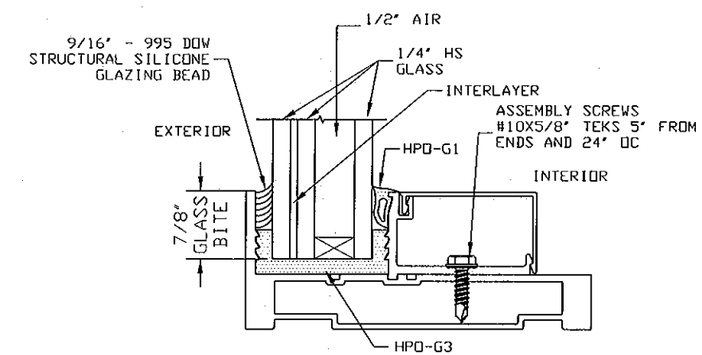

JUL 06 2012

HPI
HURRICANE
PROTECTING
INDUSTRIES LLC
3301 SW 13th DRIVE
DEERFIELD BCH, FL 33442
Phone: (954) 392-7933
Fax: (954) 392-7356

PRODUCT:
HPI 1000
SM SERIES
ALUMINUM STOREFRONT

Engineering:
EngCo Inc.
CA 8116
5595 Orange Dr. 201
Davie, Fl. 33314
Tel.: (954) 585-0304
Fax: (954) 585-0305
ENGCO@AOL.COM

PEDRO DE FIGUEIREDO
No. 52609
STATE OF FLORIDA
PROFESSIONAL ENGINEER
Engineer Seal
Pedro De Figueiredo
PE 52609

MIAMI-DADE BCCO:

PRODUCT REVISED
as complying with the Florida
Building Code
Acceptance No 12-0312.08
Expiration Date Oct. 13, 2015
By Manuel Perez
Miami-Dade Product Control

Date: 07/06/12
Scale: NA
Design by: PPMF

Drawing Number
12-020.1

SHEET
5 of 12

SECTION DETAILS

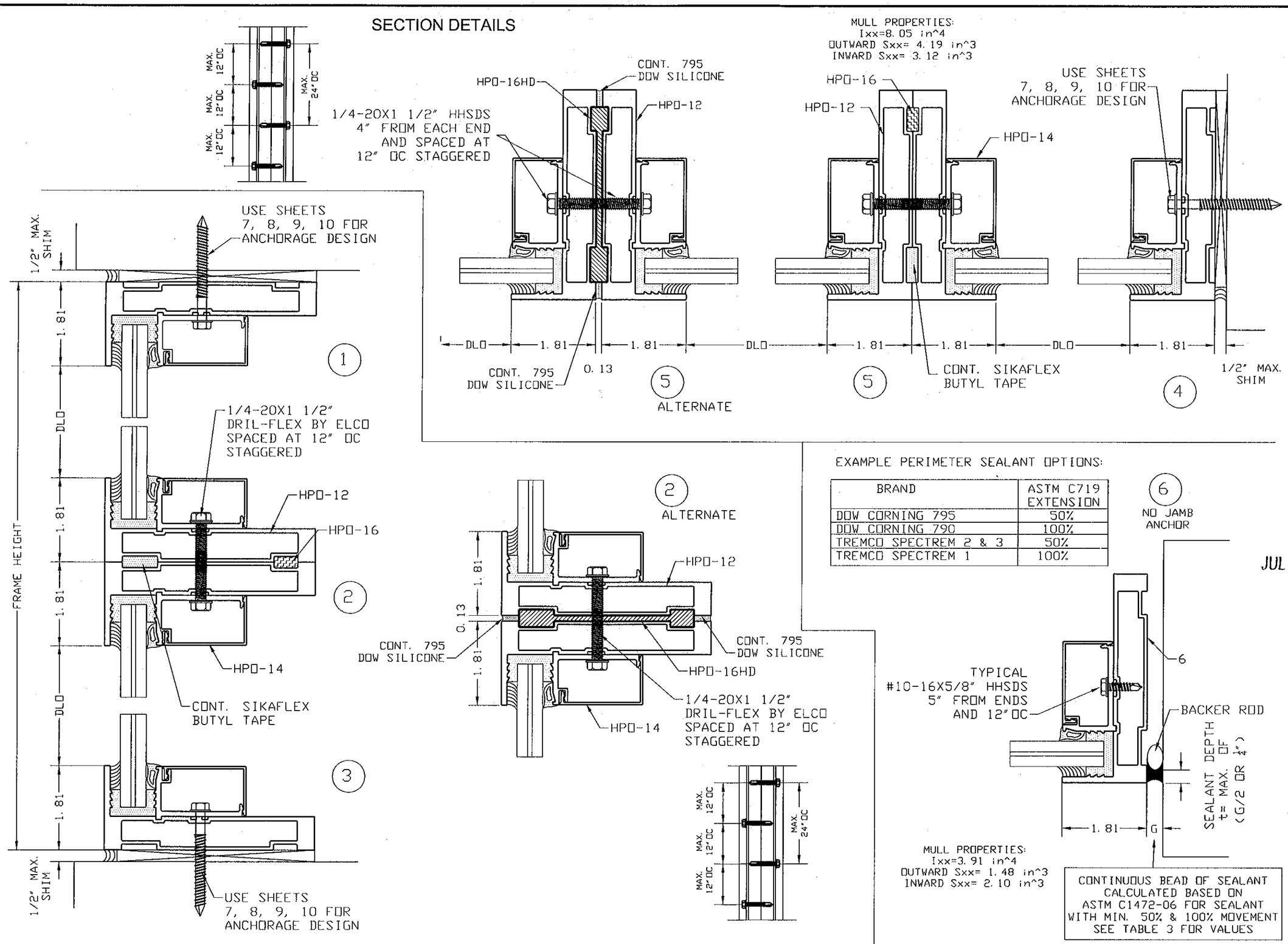

EXAMPLE PERIMETER SEALANT OPTIONS:

BRAND	ASTM C719 EXTENSION
DOW CORNING 795	50%
DOW CORNING 790	100%
TREMCO SPECTREM 2 & 3	50%
TREMCO SPECTREM 1	100%

HPI
HURRICANE PROTECTING INDUSTRIES LLC
3301 SW 13th DRIVE
DEERFIELD BCH, FL 33442
Phone: (954) 392-7933
Fax: (954) 392-7356

PRODUCT:
HPI 1000
SM SERIES
ALUMINUM STOREFRONT

Engineering:
EngCo Inc.
CA 8116
5595 Orange Dr. 201
Davie, Fl. 33314
Tel.: (954) 585-0304
Fax: (954) 585-0305
EngCo@AOL.COM

PEDRO J. DE FIGUEIREDO LICENSE No. 52609 STATE OF FLORIDA PROFESSIONAL ENGINEER
Engineer Seal
Pedro De Figueiredo
PE 52609

JUL 06 2012

MIAMI-DADE BCCO:

PRODUCT REVISED
as complying with the Florida Building Code
Acceptance No 12-0312.08
Expiration Date Oct. 13, 2015
By Maureen Jones
Miami Dade Product Control

Date: 07/06/12
Scale: NA
Design by: PPMF

Drawing Number
12-020.1

SHEET
6 of 12

FRAMING ANCHORAGE OPTIONS

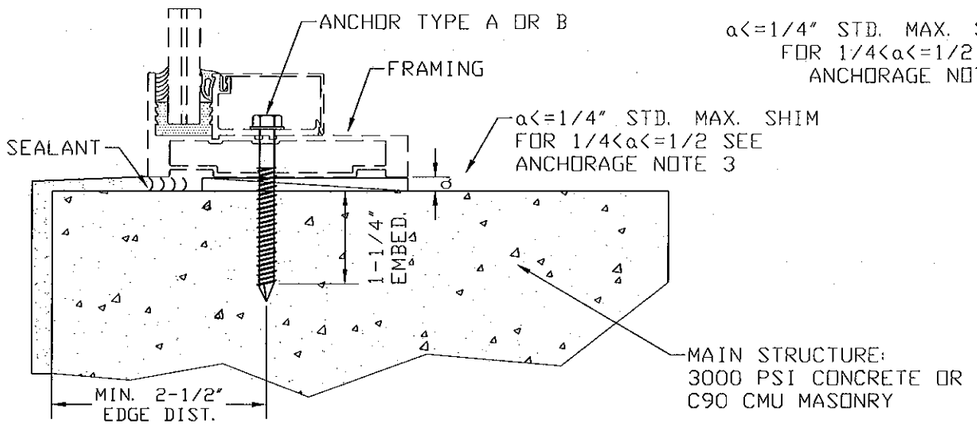

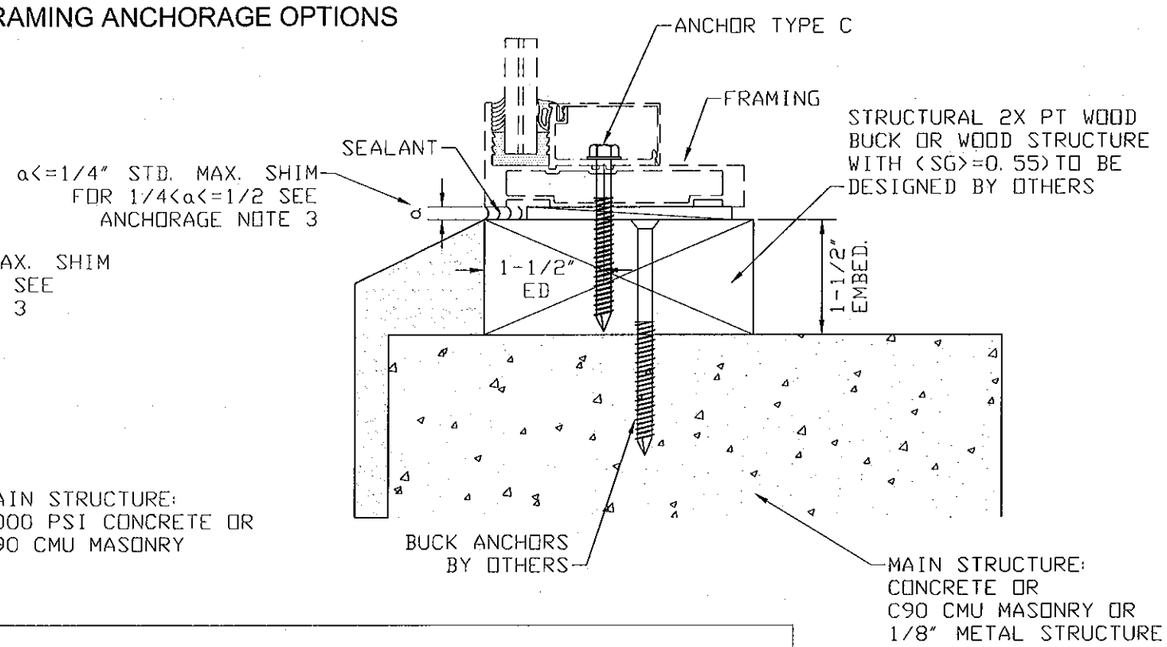

ANCHORAGE NOTES:

1- PERIMETER FRAMING ANCHORAGE APPLICABLE FOR SILL, JAMB OR HEADER
2- USE ANCHORAGE OPTIONS WITH SHEETS 8, 9 OR 10 TO DESIGN ANCHORAGE SPACING AND LAY-OUT.
3- SHIM SPACING CAN BE INCREASED UP TO 1/2". SEE OPTION "*" ON TABLES 1.1, 2.1 AND 3.1

ANCHORAGE OPTIONS:

A- 1/4" ss ITW TAPCON 1-1/4" DIRECTLY INTO 3000 PSI CONCRETE
B- 1/4" ss ITW TAPCON 1-1/4" DIRECTLY INTO MASONRY
C- 1/4" ss ITW TAPCON OR 1/4" ss SMS 1 1/2" DIRECTLY INTO MIN. 2X WOOD STRUCTURE (SG>=0.55)
D- 1/4" ss SMS DIRECTLY INTO MIN. 1/8" METAL STRUCTURE (6063-T5 ALUM. OR ASTM A36 STEEL)
E- ALL ANCHORS ABOVE INSTALLED THROUGH 1X PT INTO MAIN STRUCTURE

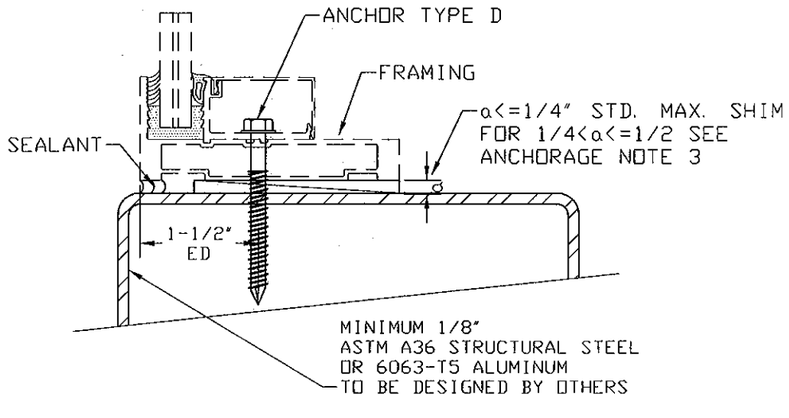

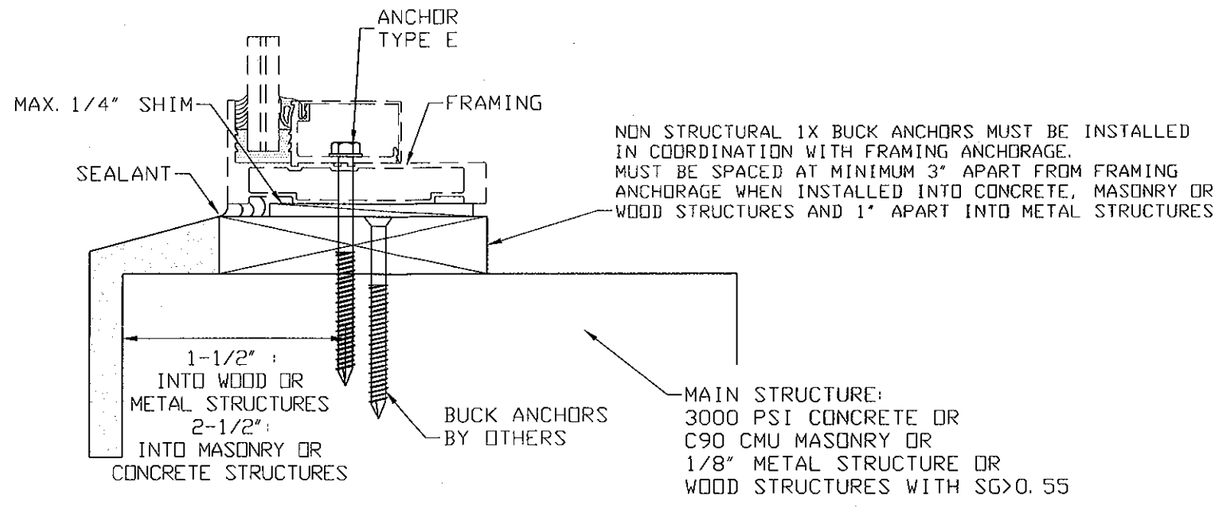

HPI
HURRICANE PROTECTING INDUSTRIES LLC
3301 SW 13th DRIVE
DEERFIELD BCH, FL 33442
Phone: (954) 392-7933
Fax: (954) 392-7356

PRODUCT:
HPI 1000
SM SERIES
ALUMINUM STOREFRONT

Engineering:
EngCo Inc.
CA 8116
5595 Orange Dr. 201
Davie, Fl. 33314
Tel.: (954) 585-0304
Fax: (954) 585-0305
EngCo@AOL.COM

PEDRO DE FIGUEIREDO
No. 52609
STATE OF FLORIDA
PROFESSIONAL ENGINEER
Engineer Seal
Pedro De Figueiredo
PE 52609

JUL 06 2012

MIAMI-DADE BCCO:

PRODUCT REVISED
as complying with the Florida Building Code
Acceptance No 12-0312.08
Expiration Date Oct. 13, 2015
By Manuel Perez
Miami Dade Product Control

Date: 07/06/12
Scale: NA
Design by: PPMF

Drawing Number
12-020.1

SHEET
7 of 12

TYPE I - SINGLE PANEL UNITS
ANCHORAGE DESIGN

TABLE 1.1 - TYPE I & II WINDOWS
MAXIMUM ANCHORAGE SPACING "S" (IN ON CENTERS)

ANCHORAGE TYPE SEE SHEET 7 AND NOTES BELOW FOR DESCRIPTION

A (IN)	B (IN)	Pd PSF	ANCHOR TYPE A	B	C	D	E	*	Pd PSF	ANCHOR TYPE A	B	C	D	E	*	Pd PSF	ANCHOR TYPE A	B	C	D	E	*
48	48	130	12	12	12	12	10	7	80	12	12	12	12	12	12	60	12	12	12	12	12	12
	60	130	12	12	12	12	10	7	80	12	12	12	12	12	12	60	12	12	12	12	12	12
	72	130	12	12	12	12	10	7	80	12	12	12	12	12	12	60	12	12	12	12	12	12
	84	130	12	12	12	12	10	7	80	12	12	12	12	12	12	60	12	12	12	12	12	12
	96	130	12	12	12	12	10	7	80	12	12	12	12	12	12	60	12	12	12	12	12	12
	108	130	12	12	12	12	10	7	80	12	12	12	12	12	12	60	12	12	12	12	12	12
	120	130	12	12	12	12	10	7	80	12	12	12	12	12	12	60	12	12	12	12	12	12
	144	130	12	12	12	12	10	7	80	12	12	12	12	12	12	60	12	12	12	12	12	12
50	60	130	12	12	11	12	9	7	80	12	12	12	12	12	11	60	12	12	12	12	12	12
	72	130	12	12	11	12	9	7	80	12	12	12	12	12	11	60	12	12	12	12	12	12
	84	130	12	12	11	12	9	7	80	12	12	12	12	12	11	60	12	12	12	12	12	12
	96	130	12	12	11	12	9	7	80	12	12	12	12	12	11	60	12	12	12	12	12	12
	108	130	12	12	11	12	9	7	80	12	12	12	12	12	11	60	12	12	12	12	12	12
	120	130	12	12	11	12	9	7	80	12	12	12	12	12	11	60	12	12	12	12	12	12
	144	130	12	12	11	12	9	7	80	12	12	12	12	12	11	60	12	12	12	12	12	12
60	60	130	11	10	9	12	8	5	80	12	12	12	12	12	9	60	12	12	12	12	12	12
	72	130	11	10	9	12	8	5	80	12	12	12	12	12	9	60	12	12	12	12	12	12
	84	130	11	10	9	12	8	5	80	12	12	12	12	12	9	60	12	12	12	12	12	12
	96	130	11	10	9	12	8	5	80	12	12	12	12	12	9	60	12	12	12	12	12	12
	108	130	11	10	9	12	8	5	80	12	12	12	12	12	9	60	12	12	12	12	12	12
	120	130	11	10	9	12	8	5	80	12	12	12	12	12	9	60	12	12	12	12	12	12
66	60	130	11	10	9	12	8	5	80	12	12	12	12	12	9	60	12	12	12	12	12	12
	72	118	11	10	9	12	8	5	80	12	12	12	12	12	8	60	12	12	12	12	12	11
	84	118	11	10	9	12	8	5	80	12	12	12	12	12	8	60	12	12	12	12	12	11
	96	118	11	10	9	12	8	5	80	12	12	12	12	12	8	60	12	12	12	12	12	11
	109	118	11	10	9	12	8	5	80	12	12	12	12	12	8	60	12	12	12	12	12	11
72	60	130	11	10	9	12	8	5	80	12	12	12	12	12	9	60	12	12	12	12	12	12
	72	108	11	10	9	12	8	5	80	12	12	12	12	11	8	60	12	12	12	12	12	10
	84	108	11	10	9	12	8	5	80	12	12	12	12	11	8	60	12	12	12	12	12	10
	96	108	11	10	9	12	8	5	80	12	12	12	12	11	8	60	12	12	12	12	12	10
	100	108	11	10	9	12	8	5	80	12	12	12	12	11	8	60	12	12	12	12	12	10
84	60	130	11	10	9	12	8	5	80	12	12	12	12	12	9	60	12	12	12	12	12	12
	72	108	11	10	9	12	8	5	80	12	12	12	12	11	8	60	12	12	12	12	12	10
	85	93	11	10	9	12	8	5	80	12	11	11	12	9	6	60	12	12	12	12	12	9
96	60	130	11	10	9	12	8	5	80	12	12	12	12	12	9	60	12	12	12	12	12	12
	72	108	11	10	9	12	8	5	80	12	12	12	12	11	8	60	12	12	12	12	12	10
	75	104	11	10	9	12	8	5	80	12	12	12	12	10	7	60	12	12	12	12	12	10
108	60	130	11	10	9	12	8	5	80	12	12	12	12	12	9	60	12	12	12	12	12	12
	67	117	11	10	9	12	8	5	80	12	12	12	12	11	8	60	12	12	12	12	12	11
120	60	130	11	10	9	12	8	5	80	12	12	12	12	12	9	60	12	12	12	12	12	12

EXAMPLE:
ANCHORAGE TYPE: C AS PER SHEET 7
SPACING: 9" OC
MODULAR SIZE: 60X120
PRESSURE: MAX. 130 PSF

TYPICAL MINIMUM ANCHOR SPACING: (S)
USE TABLE 1.1

EXAMPLE 1:
A= 84", B= 85" PD< = 80 PSF
S< = 6" OC FOR ANCHORAGE TYPE "*"
S< = 11" OC FOR ANCHORAGE TYPE B

EXAMPLE 2:
A= 84", B= 85" PD< = 60 PSF
S< = 9" OC FOR ANCHORAGE TYPE "*"
S< = 12" OC FOR ANCHORAGE TYPE B

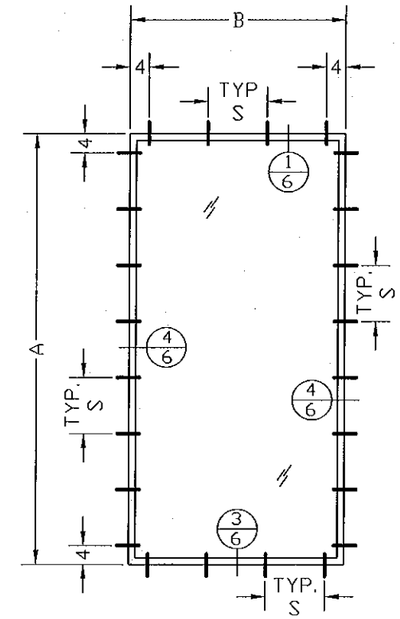

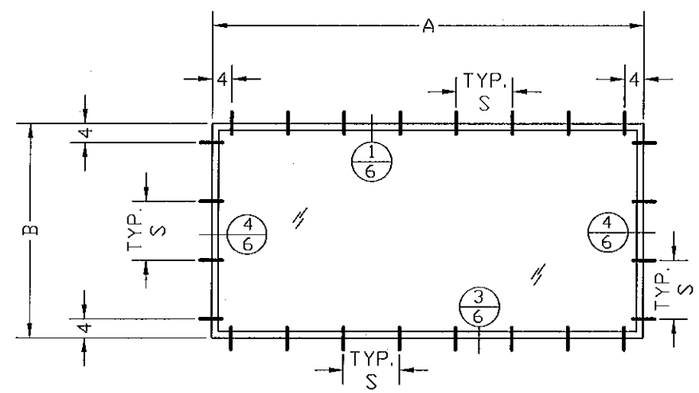

EXAMPLE:
ANCHORAGE TYPE: A, B, C OR D WITH 1/2" SHIM
SPACING: 9" OC
MODULAR SIZE: 84X85
PRESSURE: MAX. 60 PSF

ANCHOR OPTIONS:

A- 1/4" ss ITW TAPCON 1-1/4" DIRECTLY INTO 3000 PSI CONCRETE
B- 1/4" ss ITW TAPCON 1-1/4" DIRECTLY INTO MASONRY
C- 1/4" ss ITW TAPCON OR 1/4" ss SMS 1 1/2" DIRECTLY INTO MIN. 2X WOOD STRUCTURE (SG>=0.55)
D- 1/4" ss SMS DIRECTLY INTO MIN. 1/8" METAL STRUCTURE (6063-T5 ALUM. OR ASTM A36 STEEL)
E- ALL ANCHORS ABOVE INSTALLED THROUGH 1X PT INTO MAIN STRUCTURE

NOTES:
1- ANCHOR TYPE E: 1X ANCHOR SPACING MUST BE COORDINATED WITH FRAMING ANCHORAGE SPACING.
2- MAXIMUM SHIM SPACING FOR ANCHOR TYPES A, B, C, D OR E IS 1/4"
3- "*": ANCHORS TYPE A, B, C OR D WITH SHIM SPACING GREATER THAN 1/4" BUT LESS OR EQUAL 1/2".

HPI
HURRICANE PROTECTING INDUSTRIES LLC
3301 SW 13th DRIVE
DEERFIELD BCH, FL 33442
Phone: (954) 392-7933
Fax: (954) 392-7356

PRODUCT:
HPI 1000
SM SERIES
ALUMINUM STOREFRONT

Engineering:
EngCo Inc.
CA 8116
5595 Orange Dr. 201
Davie, Fl. 33314
Tel.: (954) 585-0304
Fax: (954) 585-0305
ENGCO@AOL.COM

PEDRO M. DE FIGUEIREDO
LICENSE
No. 52609
STATE OF FLORIDA
PROFESSIONAL ENGINEER
Engineer Seal
Pedro De Figueiredo
PE 52609

JUL 06 2012

MIAMI-DADE BCCO:

PRODUCT REVISED
as complying with the Florida Building Code
Acceptance No 12-0312.08
Expiration Date Oct. 13, 2015
By Manuel Sao
Miami-Dade Product Control

Date: 07/06/12
Scale: NA
Design by: PPMF

Drawing Number
12-020.1

SHEET
8 of 12

TYPE II - COMBINED SINGLE PANEL UNITS
ANCHORAGE DESIGN

TABLE 2.1 - TYPE II WINDOW
MAXIMUM # OF ANCHORS PER CLUSTER

ANCHORAGE TYPE SEE SHEET 7 AND NOTES BELOW FOR DESCRIPTION

B (IN)	A (IN)	Pd (PSF)	ANCHOR TYPE A	B	C	D	*	E	Pd (PSF)	ANCHOR TYPE A	B	C	D	*	E	Pd (PSF)	ANCHOR TYPE A	B	C	D	*	E
48	48	130	2	2	2	2	4	6	80	2	2	2	2	2	4	60	2	2	2	2	2	4
	60	130	4	4	4	2	6	8	80	2	2	2	2	4	6	60	2	2	2	2	4	4
	72	102	4	4	4	2	6	8	80	2	4	4	2	4	6	60	2	2	2	2	4	6
	84	81	4	4	4	2	6	8	80	4	4	4	2	6	8	60	2	4	4	2	4	6
	96	68	4	4	4	2	6	8	68	4	4	4	2	6	8	60	4	4	4	2	6	8
	104	61	4	4	4	2	6	8	61	4	4	4	2	6	8	60	4	4	4	2	6	8
50	60	130	4	4	4	2	6	8	80	2	2	2	2	4	6	60	2	2	2	2	4	4
	72	100	4	4	4	2	6	8	80	4	4	4	2	6	6	60	2	2	2	2	4	6
	84	79	4	4	4	2	6	8	79	4	4	4	2	6	8	60	2	4	4	2	4	6
	96	66	4	4	4	2	6	8	66	4	4	4	2	6	8	60	4	4	4	2	6	8
	104	59	4	4	4	2	6	8	59	4	4	4	2	6	8	59	4	4	4	2	6	8
60	60	130	4	4	4	2	6	8	80	2	2	2	2	4	6	60	2	2	2	2	4	4
	72	93	4	4	4	2	6	8	80	4	4	4	2	6	8	60	2	2	2	2	4	6
	84	72	4	4	4	2	6	8	72	4	4	4	2	6	8	60	4	4	4	2	6	6
	96	59	4	4	4	2	6	8	59	4	4	4	2	6	8	59	4	4	4	2	6	8
66	60	130	4	4	4	2	6	8	80	2	2	2	2	4	6	60	2	2	2	2	4	4
	72	91	4	4	4	2	6	8	80	4	4	4	2	6	8	60	2	2	4	2	4	6
	84	70	4	4	4	2	6	8	70	4	4	4	2	6	8	60	4	4	4	2	6	8
	93	59	4	4	4	2	6	8	59	4	4	4	2	6	8	59	4	4	4	2	6	8
72	60	130	4	4	4	2	6	8	80	2	2	2	2	4	6	60	2	2	2	2	4	4
	72	90	4	4	4	2	6	8	80	4	4	4	2	6	8	60	2	2	4	2	4	6
	84	68	4	4	4	2	6	8	68	4	4	4	2	6	8	60	4	4	4	2	6	8
	91	59	4	4	4	2	6	8	59	4	4	4	2	6	8	59	4	4	4	2	6	8
84	60	130	4	4	4	2	6	8	80	2	2	2	2	4	6	60	2	2	2	2	4	4
	72	90	4	4	4	2	6	8	80	4	4	4	2	6	8	60	2	2	4	2	4	6
	84	66	4	4	4	2	6	8	66	4	4	4	2	6	8	60	4	4	4	2	6	8
	86	64	4	4	4	2	6	8	64	4	4	4	2	6	8	60	4	4	4	2	6	8
96	60	130	4	4	4	2	6	8	80	2	2	2	2	4	6	60	2	2	2	2	4	4
	72	90	4	4	4	2	6	8	80	4	4	4	2	6	8	60	2	2	4	2	4	6
	75	83	4	4	4	2	6	8	80	4	4	4	2	6	8	60	2	4	4	2	4	6
108	60	130	4	4	4	2	6	8	80	2	2	2	2	4	6	60	2	2	2	2	4	4
	67	105	4	4	4	2	6	8	80	2	4	4	2	4	6	60	2	2	2	2	4	6
120	60	130	4	4	4	2	6	8	80	2	2	2	2	4	6	60	2	2	2	2	4	4
144	50	130	2	4	4	2	4	6	80	2	2	2	2	4	4	60	2	2	2	2	2	4

EXAMPLE: ANCHORAGE TYPE: A, B, C OR D
AS PER SHEET 7 WITH 1/2" SHIM
OF ANCHORS / CLUSTER: 4
MODULAR SIZE: 144X50 - MULL SPAN: 50"
MAX. PRESSURE: 80 PSF

EXAMPLE: ANCHORAGE TYPE: C
AS PER SHEET 7 W/ 1/4" SHIM
OF ANCHORS / CLUSTER: 4
MODULAR SIZE: 144X50 - MULL SPAN: 50"
MAX. PRESSURE: 130 PSF

EXAMPLE: ANCHORAGE TYPE: A
AS PER SHEET 7 WITH 1/4" SHIM
OF ANCHORS / CLUSTER: 2
MODULAR SIZE: 144X50 - MULL SPAN: 50"
MAX. PRESSURE: 80 PSF

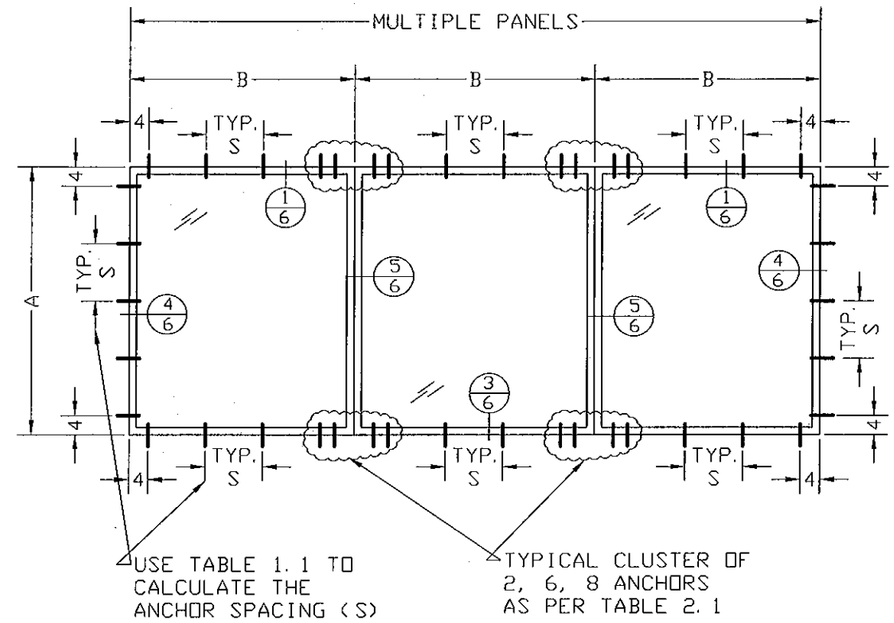

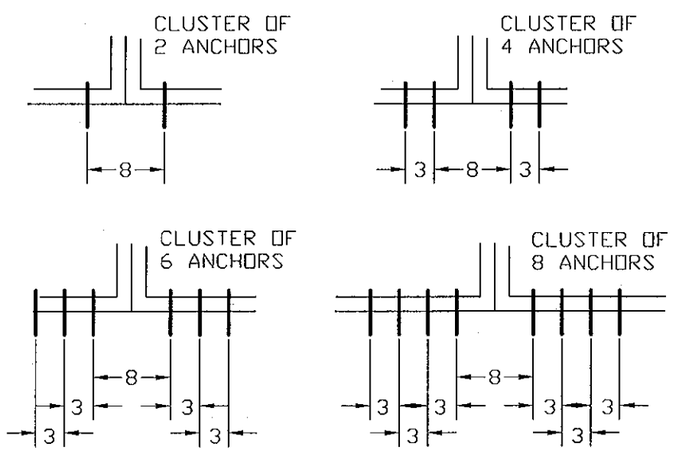

NOTES:
1- IN LOCATIONS WHERE ANCHORS ARE PLACED IN CLUSTERS, ANCHOR TYPE E, IS DESIGNED FOR 3/4" CANTILEVER CONSIDERING THE 1X JUST AS A FILLER. ALL OTHER LOCATIONS 1X BUCK MUST BE PROPERLY SECURED TO THE SUBSTRATE AND IN COORDINATION WITH FRAMING ANCHORAGE.
2- MAXIMUM SHIM SPACING FOR ANCHOR TYPES A, B, C, D OR E IS 1/4"
3- "*": ANCHORS TYPE A, B, C OR D WITH SHIM SPACING GREATER THAN 1/4" BUT LESS OR EQUAL 1/2".

ANCHOR OPTIONS:

A- 1/4" ss ITW TAPCON 1-1/4" DIRECTLY INTO 3000 PSI CONCRETE
B- 1/4" ss ITW TAPCON 1-1/4" DIRECTLY INTO MASONRY
C- 1/4" ss ITW TAPCON OR 1/4" ss SMS 1 1/2" DIRECTLY INTO MIN. 2X WOOD STRUCTURE (SG>=0.55)
D- 1/4" ss SMS DIRECTLY INTO MIN. 1/8" METAL STRUCTURE (6063-T5 ALUM. OR ASTM A36 STEEL)
E- ALL ANCHORS ABOVE INSTALLED THROUGH 1X PT INTO MAIN STRUCTURE

HPI
HURRICANE PROTECTING INDUSTRIES LLC
3301 SW 13th DRIVE
DEERFIELD BCH, FL 33442
Phone: (954) 392-7933
Fax: (954) 392-7356

PRODUCT:
HPI 1000
SM SERIES
ALUMINUM STOREFRONT

Engineering:
EngCo Inc.
CA 8116
5595 Orange Dr. 201
Davie, Fl. 33314
Tel.: (954) 585-0304
Fax: (954) 585-0305
EngCo@AOL.COM

PEDRO J. DE FIGUEIREDO
No. 52609
STATE OF FLORIDA
PROFESSIONAL ENGINEER

Engineer Seal
Pedro De Figueiredo
PE 52609

JUL 06 2012

MIAMI-DADE BCCO:

PRODUCT REVISED
as complying with the Florida Building Code
Acceptance No 12-0312.08
Expiration Date Oct. 13, 2015
By Manuel Sera
Miami Dade Product Control

Date: 07/06/12
Scale: NA
Design by: PPMF

Drawing Number
12-020.1

TYPE III - MULTIPLE PANEL UNITS
ANCHORAGE DESIGN

TABLE 3.1 - TYPE III WINDOW
MAXIMUM # OF ANCHORS PER CLUSTER

TW (IN)	FH (IN)	Pd (PSF)	ANCHOR TYPE A	B	C	D	*	E	Pd (PSF)	ANCHOR TYPE A	B	C	D	*	E	Pd (PSF)	ANCHOR TYPE A	B	C	D	*	E
48	48	130	6	6	6	6	6	6	80	6	6	6	6	6	6	60	6	6	6	6	6	6
	60	130	6	6	6	6	6	8	80	6	6	6	6	6	6	60	6	6	6	6	6	6
	72	130	6	6	6	6	8	10	80	6	6	6	6	6	6	60	6	6	6	6	6	6
	84	130	6	6	6	6	10	12	80	6	6	6	6	6	8	60	6	6	6	6	6	6
	96	117	6	6	6	6	10	14	80	6	6	6	6	6	10	60	6	6	6	6	6	8
	104	100	6	6	6	6	10	12	80	6	6	6	6	8	10	60	6	6	6	6	6	8
50	60	130	6	6	6	6	6	8	80	6	6	6	6	6	6	60	6	6	6	6	6	6
	72	130	6	6	6	6	8	10	80	6	6	6	6	6	6	60	6	6	6	6	6	6
	84	130	6	6	6	6	10	12	80	6	6	6	6	6	8	60	6	6	6	6	6	6
	96	113	6	6	6	6	10	14	80	6	6	6	6	8	10	60	6	6	6	6	6	8
	104	97	6	6	6	6	10	12	80	6	6	6	6	8	10	60	6	6	6	6	6	8
60	60	130	6	6	6	6	6	8	80	6	6	6	6	6	6	60	6	6	6	6	6	6
	72	130	6	6	6	6	8	10	80	6	6	6	6	6	8	60	6	6	6	6	6	6
	84	124	6	6	6	6	10	14	80	6	6	6	6	6	8	60	6	6	6	6	6	6
	96	102	6	6	6	6	10	14	80	6	6	6	6	8	10	60	6	6	6	6	6	8
66	60	130	6	6	6	6	6	8	80	6	6	6	6	6	6	60	6	6	6	6	6	6
	72	130	6	6	6	6	8	12	80	6	6	6	6	6	8	60	6	6	6	6	6	6
	84	120	6	6	6	6	10	14	80	6	6	6	6	6	10	60	6	6	6	6	6	8
	93	102	6	6	6	6	10	14	80	6	6	6	6	8	10	60	6	6	6	6	6	8
72	60	130	6	6	6	6	6	8	80	6	6	6	6	6	6	60	6	6	6	6	6	6
	72	130	6	6	6	6	8	12	80	6	6	6	6	6	8	60	6	6	6	6	6	6
	84	117	6	6	6	6	10	14	80	6	6	6	6	6	10	60	6	6	6	6	6	8
	91	102	6	6	6	6	10	14	80	6	6	6	6	8	10	60	6	6	6	6	6	8
84	60	130	6	6	6	6	6	8	80	6	6	6	6	6	6	60	6	6	6	6	6	6
	72	130	6	6	6	6	8	12	80	6	6	6	6	6	8	60	6	6	6	6	6	6
	84	114	6	6	6	6	10	14	80	6	6	6	6	8	10	60	6	6	6	6	6	8
	86	110	6	6	6	6	10	14	80	6	6	6	6	8	10	60	6	6	6	6	6	8
96	60	130	6	6	6	6	6	8	80	6	6	6	6	6	6	60	6	6	6	6	6	6
	72	130	6	6	6	6	8	12	80	6	6	6	6	6	8	60	6	6	6	6	6	6
	75	130	6	6	6	6	8	12	80	6	6	6	6	6	8	60	6	6	6	6	6	6
108	60	130	6	6	6	6	6	8	80	6	6	6	6	6	6	60	6	6	6	6	6	6
	67	130	6	6	6	6	8	10	80	6	6	6	6	6	6	60	6	6	6	6	6	6
120	60	130	6	6	6	6	6	8	80	6	6	6	6	6	6	60	6	6	6	6	6	6
144	50	130	6	6	6	6	6	6	80	6	6	6	6	6	6	60	6	6	6	6	6	6

EXAMPLE:
ANCHORAGE TYPE A, B, C OR D
AS PER SHEET 7 WITH 1/2" SHIM
OF ANCHORS / CLUSTER: 8
SIZE: 108X67 - MULL SPAN: 67"
MAX. PRESSURE TABLE 3: 130 PSF

EXAMPLE: ANCHORAGE TYPE C
AS PER SHEET 7 WITH 1/4" SHIM
OF ANCHORS / CLUSTER: 6
SIZE: 108X67 - MULL SPAN: 67"
MAX. PRESSURE: 60 PSF

USE MW=A AND FH=B ON TABLE 1.1
TO CALCULATE THE MAXIMUM ANCHOR
SPACING (S) BETWEEN CLUSTERS

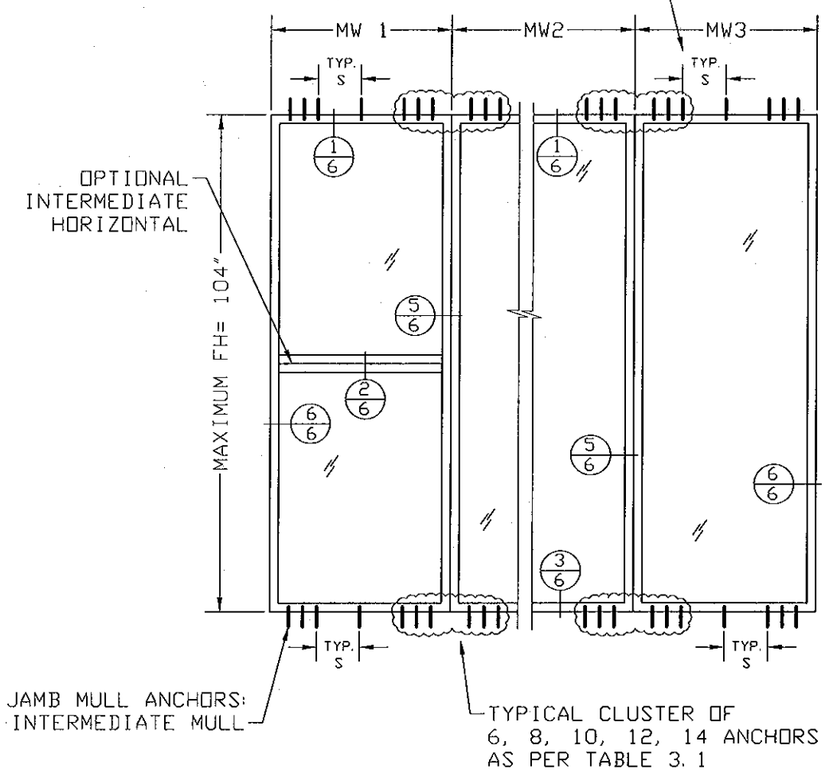

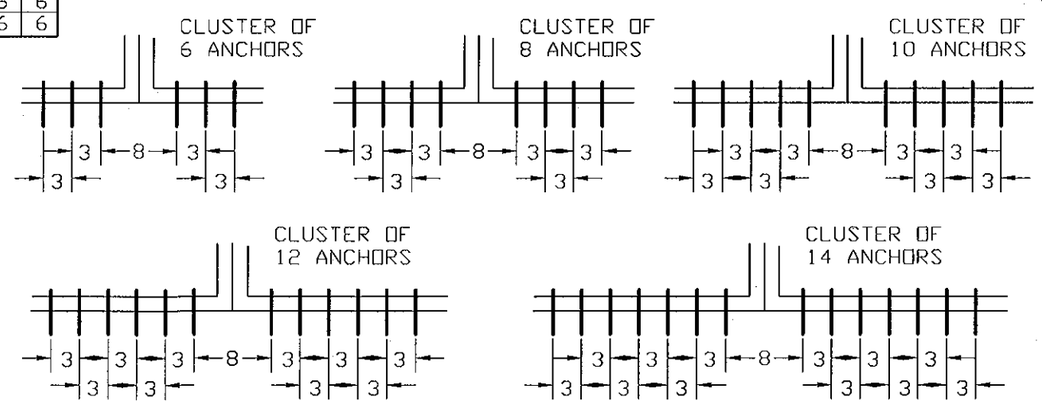

NOTES:
1- IN LOCATIONS WHERE ANCHORS ARE PLACED IN CLUSTERS, ANCHOR TYPE E, IS DESIGNED FOR 3/4" CANTILEVER CONSIDERING THE 1X JUST AS A FILLER. ALL OTHER LOCATIONS 1X BUCK MUST BE PROPERLY SECURED TO THE SUBSTRATE AND IN COORDINATION WITH FRAMING ANCHORAGE.
2- MAXIMUM SHIM SPACING FOR ANCHOR TYPES A, B, C, D OR E IS 1/4"
3- "*": ANCHORS TYPE A, B, C OR D WITH SHIM SPACING GREATER THAN 1/4" BUT LESS OR EQUAL 1/2".

ANCHOR OPTIONS:
A- 1/4" ss ITW TAPCON 1-1/4" DIRECTLY INTO 3000 PSI CONCRETE
B- 1/4" ss ITW TAPCON 1-1/4" DIRECTLY INTO MASONRY
C- 1/4" ss ITW TAPCON OR 1/4" ss SMS 1 1/2" DIRECTLY INTO MIN. 2X WOOD STRUCTURE (SG>=0.55)
D- 1/4" ss SMS DIRECTLY INTO MIN. 1/8" METAL STRUCTURE (6063-T5 ALUM. OR ASTM A36 STEEL)
E- ALL ANCHORS ABOVE INSTALLED THROUGH 1X PT INTO MAIN STRUCTURE

HPI
HURRICANE PROTECTING INDUSTRIES LLC
3301 SW 13th DRIVE
DEERFIELD BCH, FL 33442
Phone: (954) 392-7933
Fax: (954) 392-7356

PRODUCT:
HPI 1000
SM SERIES
ALUMINUM STOREFRONT

Engineering:
EngCo Inc.
CA 8116
5595 Orange Dr. 201
Davie, Fl. 33314
Tel.: (954) 585-0304
Fax: (954) 585-0305
EngCo@AOL.COM

PEDRO DE FIGUEIREDO
No. 52609
STATE OF FLORIDA
PROFESSIONAL ENGINEER
Engineer Seal
Pedro De Figueiredo
PE 52609

JUL 06 2012

MIAMI-DADE BCCO:

PRODUCT REVISED
as complying with the Florida Building Code
Acceptance No 12-0312.08
Expiration Date Oct. 13, 2015
By Manuel Perez
Miami Dade Product Control

Date: 07/06/12
Scale: NA
Design by: PPMF

Drawing Number
12-020.1

SHEET
10 of 12

WINDOW COMPONENTS

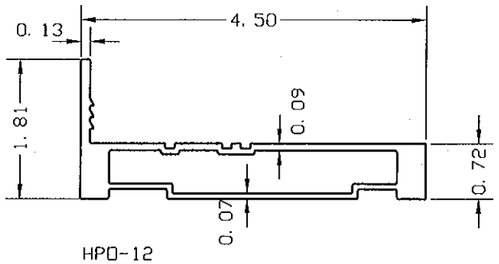

HPO-12
PERIMETER FRAMING
ALLOY: 6063-T6

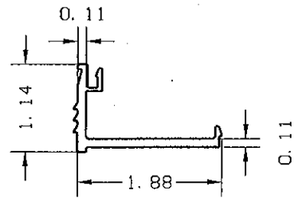

HPO-13
GLAZING STOP
ALLOY: 6063-T6

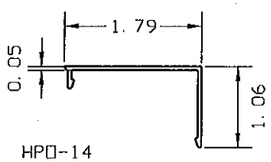

HPO-14
SNAP COVER
ALLOY: 6063-T5

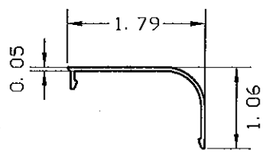

HPO-14R
ROUND SNAP COVER
ALLOY: 6063-T5

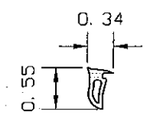

HPO-G1
GLAZING GASKET

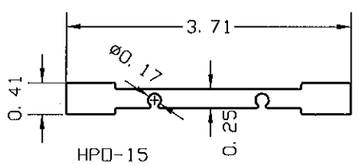

HPO-15
SHEAR CLIP
ALLOY: 6005-T5

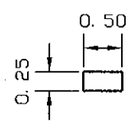

HPO-16
CONNECTING
MULLIONS BARS
ALLOY: 6063-T6

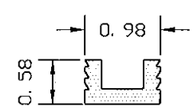

HPO-G2 9/16"
GLAZING GASKET

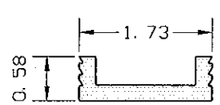

HPO-G3 1 5/16"
GLAZING GASKET

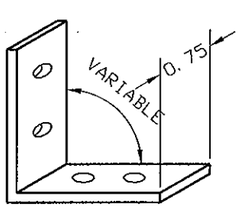

HPO-17
1/8-2X2X3/4"
CORNER CLIP WITH
(4)#10-32X1/2" SCREWS
ALLOY: 6063-T5

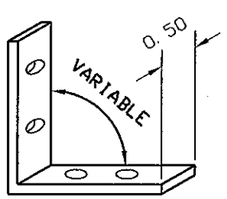

HPO-17A
1/8-2X2X1/2"
CORNER CLIP WITH
(4)#10-32X1/2" SCREWS
ALLOY: 6063-T5

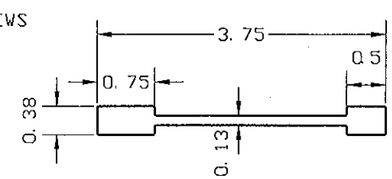

HPO-16HD - CONNECTING
MULLIONS BARS
ALLOY: 6063-T6

FRAME ASSEMBLY

WINDOW TYPE III
INTERMEDIATE HORIZONTAL ASSEMBLY

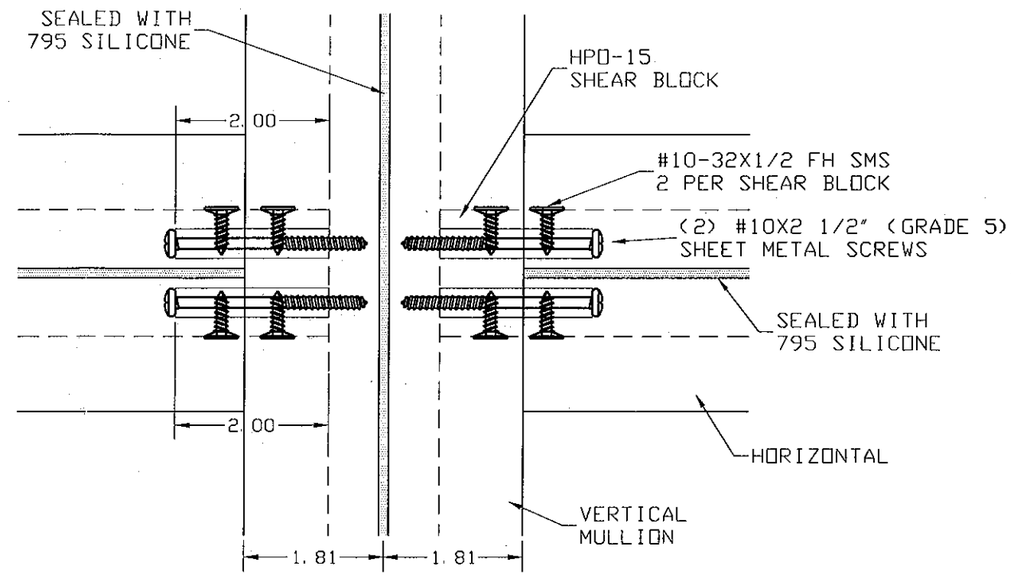

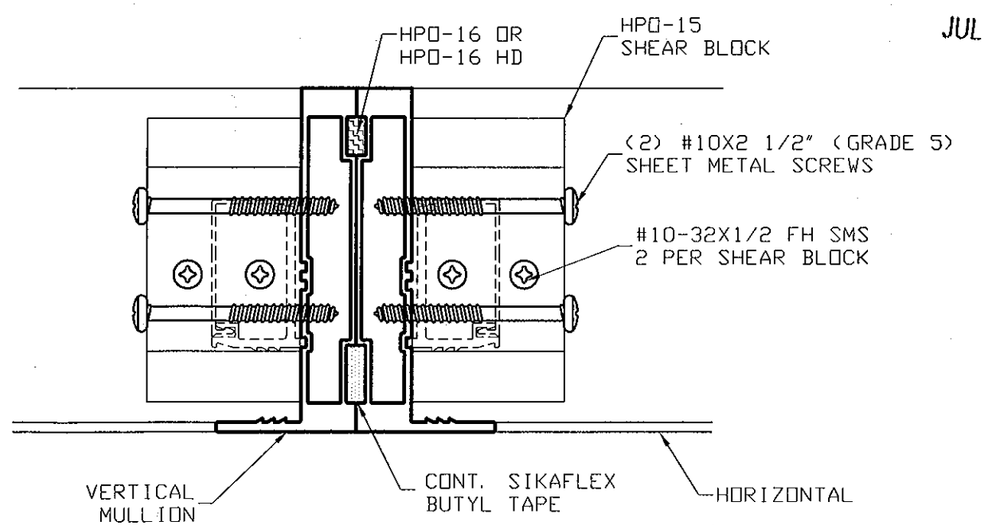

HPI
HURRICANE
PROTECTING
INDUSTRIES LLC
3301 SW 13th DRIVE
DEERFIELD BCH, FL 33442
Phone: (954) 392-7933
Fax: (954) 392-7356

PRODUCT:
HPI 1000
SM SERIES
ALUMINUM STOREFRONT

Engineering:
EngCo Inc.
CA 8116
5595 Orange Dr. 201
Davie, Fl. 33314
Tel.: (954) 585-0304
Fax: (954) 585-0305
EngCo@EngCo.com

PEDRO J. DE FIGUEIREDO
No. 52609
STATE OF FLORIDA
PROFESSIONAL ENGINEER
Engineer Seal
Pedro De Figueiredo
PE 52609

JUL 06 2012

MIAMI-DADE BCCO:

PRODUCT REVISED
as complying with the Florida
Building Code
Acceptance No 12-0312.08
Expiration Date Oct. 13, 2015
By Manuel Perez
Miami Dade Product Control

Date: 07/06/12
Scale: NA
Design by: PPMF

Drawing Number
12-020.1

SHEET
11 of 12

FRAME ASSEMBLY

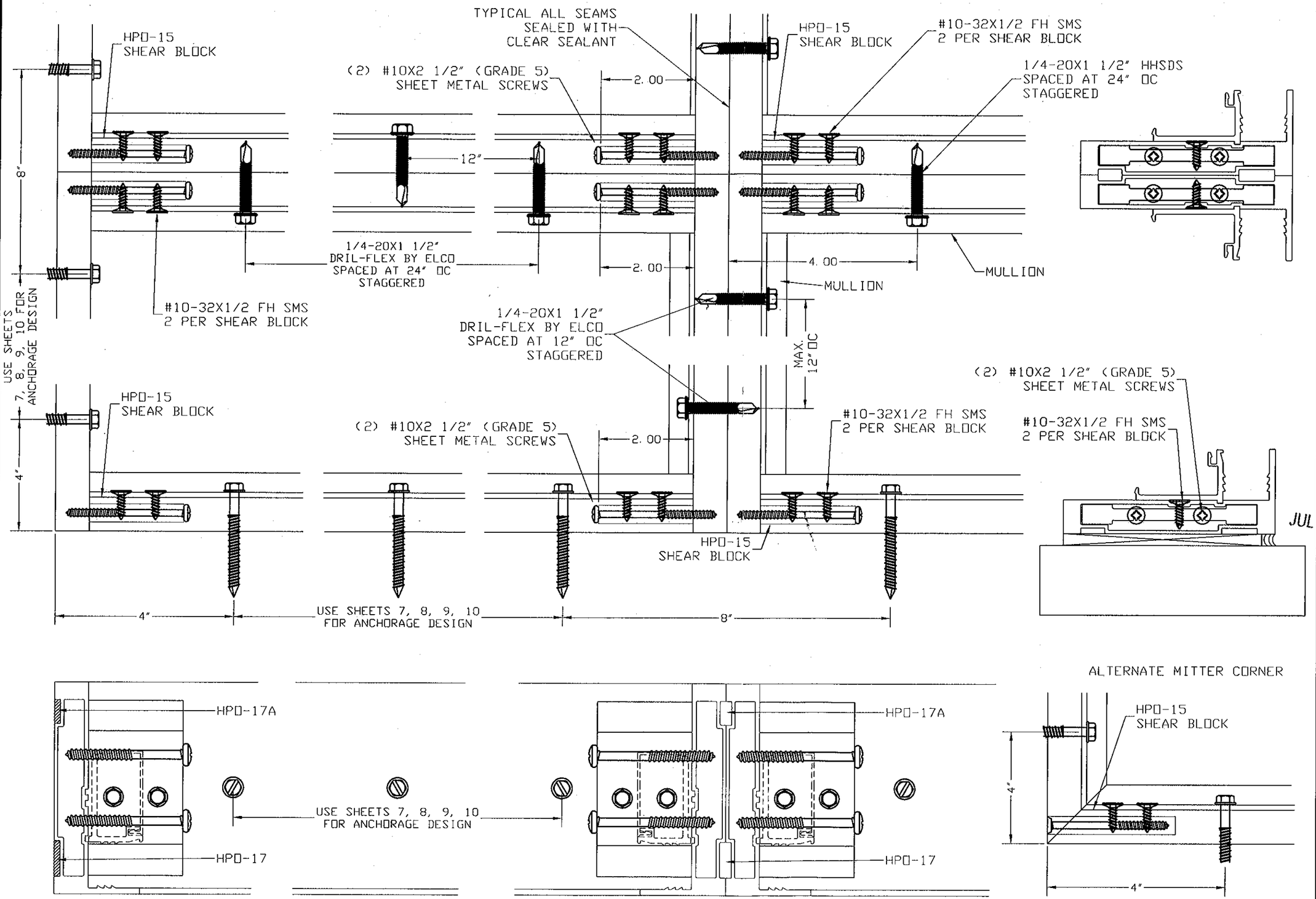

HPI
HURRICANE
PROTECTING
INDUSTRIES LLC

3301 SW 13th DRIVE
DEERFIELD BCH, FL 33442
Phone: (954) 392-7933
Fax: (954) 392-7356

PRODUCT:
HPI 1000
SM SERIES
ALUMINUM STOREFRONT

Engineering:
EngCo Inc.
CA 8116
5595 Orange Dr. 201
Davie, Fl. 33314
Tel.: (954) 585-0304
Fax: (954) 585-0305
ENGCO@AOL.COM

PEDRO M. DE FIGUEIREDO
LICENSE
No. 52609
STATE OF FLORIDA
PROFESSIONAL ENGINEER

Engineer Seal
Pedro De Figueiredo
PE 52609

JUL 06 2012

MIAMI-DADE BCCO:

PRODUCT REVISED
as complying with the Florida Building Code
Acceptance No 12-0312.08
Expiration Date Oct. 13, 2015
By Manuel Perez
Miami-Dade Product Control

Date: 07/06/12
Scale: NA
Design by: PPMF

Drawing Number
12-020.1

SHEET
12 of 12